Service Manual

ORDER NO. AD9403057C8



Tuner

ST-GT350

Colour

(K)... Black Type

Area

Suffix for Model No.	Area	Colour
(E)	Europe.	(K)
(EB)	Great Britain.	
(EF)	France.	
(EG)	Germany.	
(EI)	Italy.	
(EP)	Poland.	
(GC)	Asia, Latin America, Middle Near East and Africa.	
(GN)	Oceania.	

Technics

■ SPECIFICATIONS (DIN 45 500)

■ FM TUNER SECTION

Frequency range	87.50−108.00 MHz (0.05 MHz steps)
Sensitivity	1.5 µV (IHF, usable)
S/N 30 dB	1.3 µV (75 Ω)
S/N 26 dB	1.2 µV (75 Ω)
S/N 20 dB	0.9 µV (75 Ω)
IHF 46 dB stereo quieting sensitivity	28 µV (75 Ω)
Total harmonic distortion	
MONO	0.2%
STEREO	0.3%
S/N	
MONO	70 dB (75 dB, IHF)
STEREO	65 dB (70 dB, IHF)
Frequency response	20 Hz−15 kHz, +0.5 dB to −1.5 dB
Alternate channel selectivity	
±400 kHz	65 dB
Capture ratio	1.0 dB
Image rejection at 98 MHz	45 dB
IF rejection at 98 MHz	90 dB
Spurious response rejection at 98 MHz	75 dB
AM suppression	55 dB
Stereo separation	
1 kHz	40 dB
Carrier leak	
19 kHz	−30 dB (−35 dB, IHF)
38 kHz	−50 dB (−55 dB, IHF)
Channel balance (250 Hz−6.3 kHz)	±1.5 dB
Limiting point	1.2 µV
Bandwidth	
IF amplifier	180 kHz
FM demodulator	1000 kHz
Antenna terminal(s)	75 Ω (unbalanced)

■ GENERAL

Output voltage	
for (E) (EB) areas	0.3 V (0.6 V, IHF)
for (EG, EI) areas	0.6 V (1.2 V, IHF)
Power consumption	9 W
Power supply	
for (GC) area	AC 50 Hz/60 Hz, 110 V−127 V/220 V−240 V
for others	AC 50 Hz/60 Hz, 230 V−240 V
Dimensions (W × H × D)	430 × 69.3 × 301 mm
Weight	2.6 kg

■ AM TUNER SECTION

Frequency range	
for (E, EB, EF, EP) areas	
MW	522 kHz~1611 kHz (9-kHz steps)
	530 kHz~1620 kHz (10-kHz steps)
LW	144 kHz~288 kHz (9-kHz steps)
for (EG, EI, GC, GN) areas	
AM	522 kHz~1611 kHz (9-kHz steps)
	530 kHz~1620 kHz (10-kHz steps)
Sensitivity (S/N 20 dB)	
for (E, EB, EF, EP) areas	
MW (at 999 kHz)	20 µV, 600 µV/m
LW (at 216 kHz)	150 µV
for (EG, EI, GC, GN) areas	
AM (at 999 kHz)	20 µV, 600 µV/m
Selectivity (±9 kHz)	
for (E, EB, EF, EP) areas	
MW (at 999 kHz)	40 dB
LW (at 216 kHz)	40 dB
for (EG, EI, GC, GN) areas	
AM (at 999 kHz)	40 dB
Image rejection	
for (E, EB, EF, EP) areas	
MW (at 999 kHz)	40 dB
LW (at 216 kHz)	40 dB
for (EG, EI, GC, GN) areas	
AM (at 999 kHz)	40 dB
IF rejection	
for (E, EB, EF, EP) areas	
MW (at 999 kHz)	50 dB
LW (at 216 kHz)	50 dB
for (EG, EI, GC, GN) areas	
AM (at 999 kHz)	50 dB

Notes:

1. Design and specifications are subject to change without notice.
   Weight and dimensions are approximate.
2. Total harmonic distortion is measured by the digital spectrum analyzer.

■ BLOCK DIAGRAM

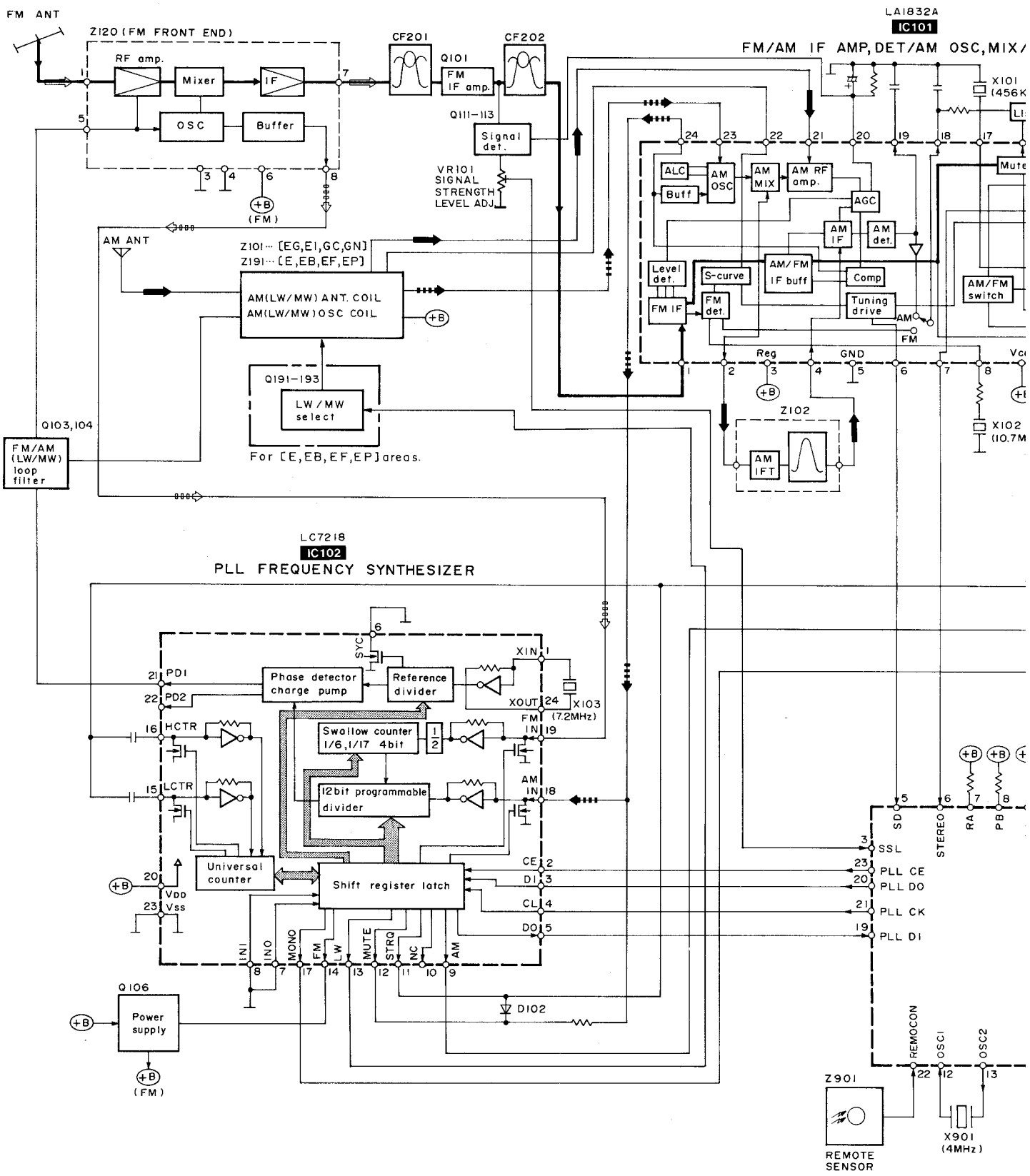

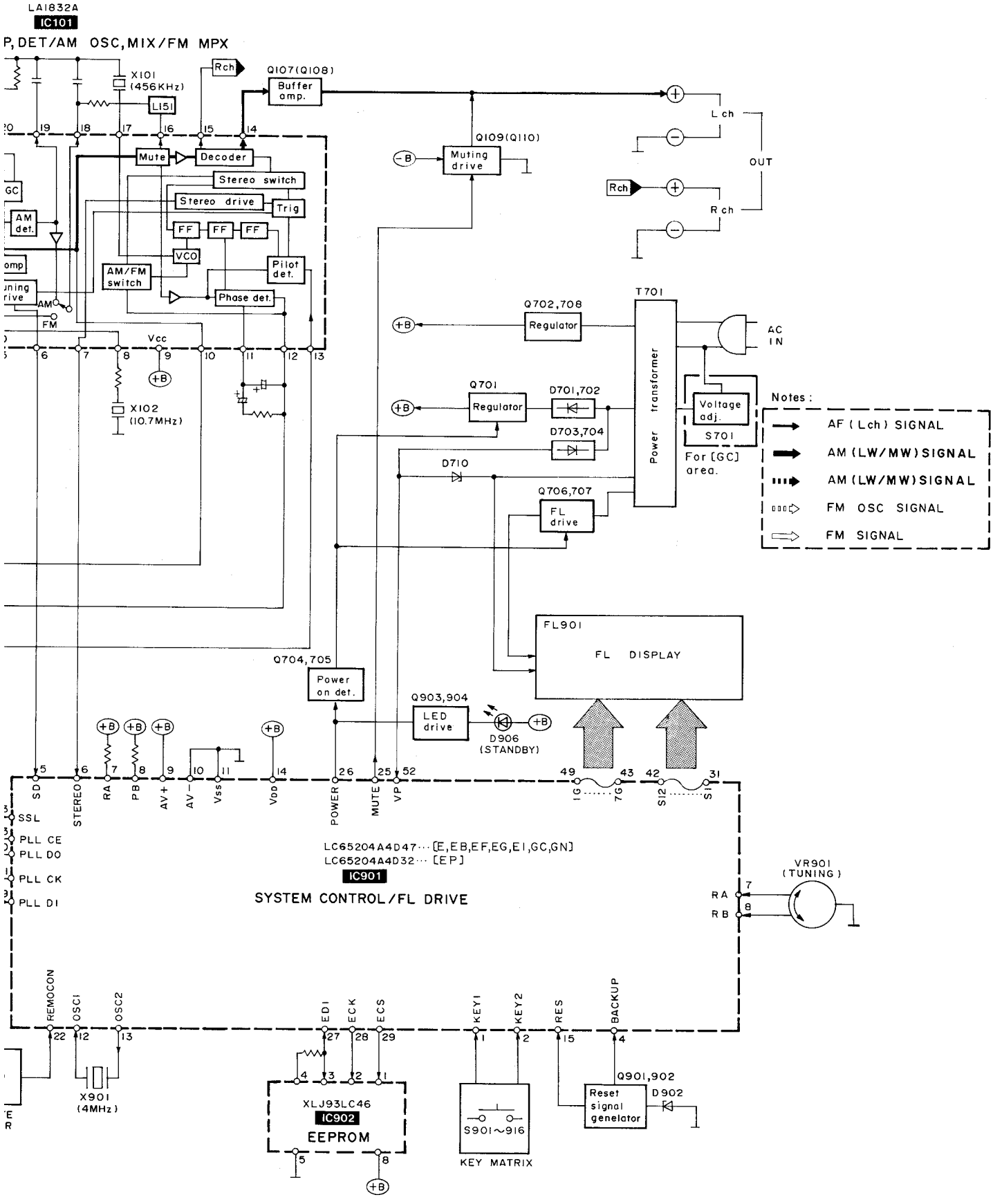
LA1832A
IC101
P, DET/AM OSC, MIX/FM MPX
X101 (456KHz)
LI51
Rch
Q107(Q108)
Buffer amp.
Q109(Q110)
Muting drive
L ch
OUT
R ch
Mute
Decoder
Stereo switch
Stereo drive
Trig
FF
FF
FF
VCO
Pilot det.
AM/FM switch
Phase det.
AM det.
AM
FM
Vcc
X102 (10.7MHz)
Q702,708
Regulator
T701
Power transformer
AC IN
Q701
Regulator
D701,702
D703,704
Voltage adj.
S701
For [GC] area.
D710
Q706,707
FL drive
Notes :
AF (Lch) SIGNAL
AM (LW/MW) SIGNAL
AM (LW/MW) SIGNAL
FM OSC SIGNAL
FM SIGNAL
FL901
FL DISPLAY
Q704,705
Power on det.
Q903,904
LED drive
D906 (STANDBY)
SD
STEREO
RA
PB
AV+
AV−
Vss
Vdd
POWER
MUTE
VP
IG
7G
S12
S1
SSL
PLL CE
PLL DO
PLL CK
PLL DI
LC65204A4D47··· [E,EB,EF,EG,EI,GC,GN]
LC65204A4D32··· [EP]
IC901
SYSTEM CONTROL/FL DRIVE
VR901 (TUNING)
RA
RB
REMOCON
OSCI
OSC2
EDI
ECK
ECS
KEY1
KEY2
RES
BACKUP
X901 (4MHz)
XLJ93LC46
IC902
EEPROM
S901~916
KEY MATRIX
Reset signal genelator
Q901,902
D902

■ TERMINAL FUNCTION OF IC

• IC901 (LC65204A4D32: for (EP) area/LC65204A4D47: for others): System Control/FL Drive

Pin No.	Mark	I/O Division	Function
1	KEY 1	I	Key matrix detect terminal
2	KEY 2	I	Key matrix detect terminal
3	SSL	I	Not used, connected to resistor
4	BACKUP	I	Power Backup detect terminal
5	SD	I	Received signal detect terminal
6	STEREO	I	Stereo signal detect terminal
7	RA	I	Not used, connected to resister
8	RB	I	
9	AV+	I	Not used, connected to power supply
10	AV−	—	Not used, connected to GND
11	VSS	—	GND terminal
12	OSC1	I	Quartz oscillation terminal (f=4MHz)
13	OSC2	O	
14	VDD	I	Power supply terminal
15	RES	I	Reset signal detect terminal
16	X1	I	Quartz oscillation terminal (f=32.7MHz) Not used, connected to power supply
17	X2	O	Quartz oscillation terminal (f=32.7MHz) Not used, open
18	TEST	—	Test terminal

Pin No.	Mark	I/O Division	Function
19	PLLDI	I	Serial data input for PLL tuner
20	PLLDO	O	Serial data output for PLL tuner
21	PLLCK	O	Serial clock output for PLL tuner
22	REMOCON	I	Remote control terminal
23	PLLCE	O	Serial chip enable output for PLL tuner
24	NC	—	No connection
25	MUTE	O	Muting control signal output terminal
26	POWER	O	Power on signal output
27	EDI	I/O	Serial data for EEPROM
28	ECK	O	Serial clock output for EEPROM
29	ECS	O	Chip select output for EEPROM
30	INIT	I	Not used, connected to resistor
31 ∫ 42	S1 ∫ S12	O	Segment signal of FL display
43 ∫ 49	7G ∫ 1G	O	Digit signal of FL display
50 • 51	NC	—	No connection
52	VP	I	Negative voltage terminal

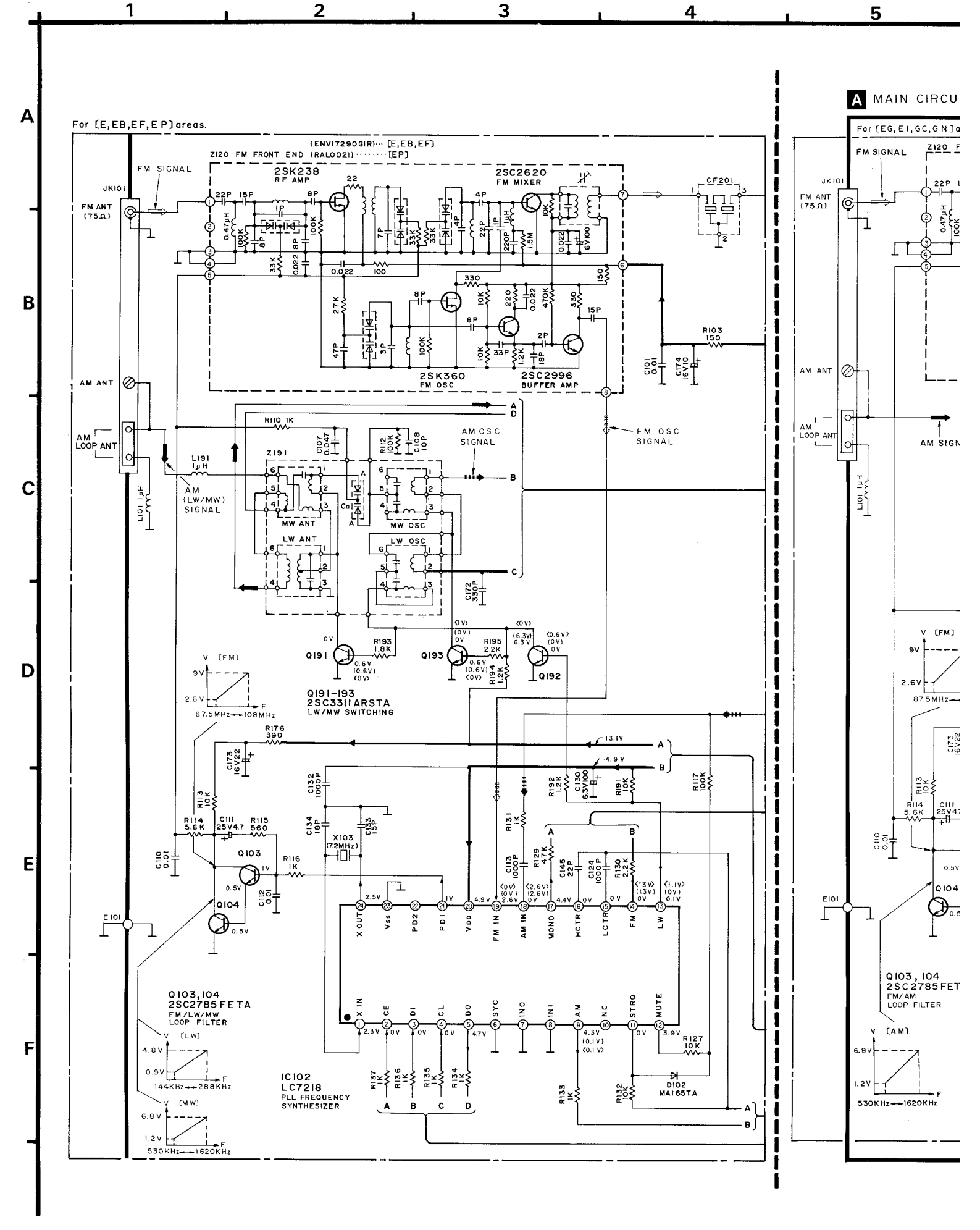
A MAIN CIRCU
For (E,EB,EF,EP) areas.
(ENVI7290GIR)··· (E,EB,EF]
Z120 FM FRONT END (RALOO2I)·····[EP]
FM SIGNAL
JK101
FM ANT (75Ω)
2SK238
RF AMP
2SC2620
FM MIXER
CF201
2SK360
FM OSC
2SC2996
BUFFER AMP
R103 150
C101 0.01
C174 16V10
AM ANT
AM LOOP ANT
R110 1K
C107 0.047
R112 100K
C108 10P
AM OSC SIGNAL
FM OSC SIGNAL
Z191
L191 1μH
AM (LW/MW) SIGNAL
L101 1μH
MW ANT
LW ANT
MW OSC
LW OSC
C172 330P
Q191
Q193
Q192
R193 1.8K
R195 2.2K
R194 1.2K
Q191-193
2SC3311ARSTA
LW/MW SWITCHING
V [FM]
9V
2.6V
87.5MHz→108MHz
R176 390
C173 16V22
13.1V
4.9V
R113 10K
R114 5.6K
C111 25V4.7
R115 560
C110 0.01
C132 1000P
C134 18P
C133 15P
X103 (7.2MHz)
R116 1K
C112 0.01
Q103
Q104
E101
R131 1K
R129 4.7K
C113 1000P
C145 22P
C124 1000P
R130 2.2K
R192 1.2K
C130 6.3V100
R191 10K
R117 100K
X OUT
Vss
PD2
PD1
Vdd
FM IN
AM IN
MONO
HCTR
LCTR
FM
LW
Q103,104
2SC2785FETA
FM/LW/MW
LOOP FILTER
V [LW]
4.8V
0.9V
144KHz→288KHz
V [MW]
6.8V
1.2V
530KHz→1620KHz
IC102
LC7218
PLL FREQUENCY SYNTHESIZER
X IN
CE
DI
CL
DO
SYC
INO
INI
AM
NC
STRQ
MUTE
R137 1K
R136 1K
R135 1K
R134 1K
R133 1K
R132 10K
R127 10K
D102
MA165TA
For (EG,EI,GC,GN]a
FM SIGNAL
Z120 F
JK101
FM ANT (75Ω)
AM ANT
AM LOOP ANT
AM SIGN
L101 1μH
V [FM]
9V
2.6V
87.5MHz→
C173 16V22
R113 10K
R114 5.6K
C111 25V4.7
C110 0.01
E101
Q104
Q103, 104
2SC2785FET
FM/AM
LOOP FILTER
V [AM]
6.8V
1.2V
530KHz→1620KHz

6 7 8 9 10

CIRCUIT (FM FRONT END/PLL/FM·AM IF AMP·DET·MPX/CONTROL/POWER SUPPLY/MUTING)

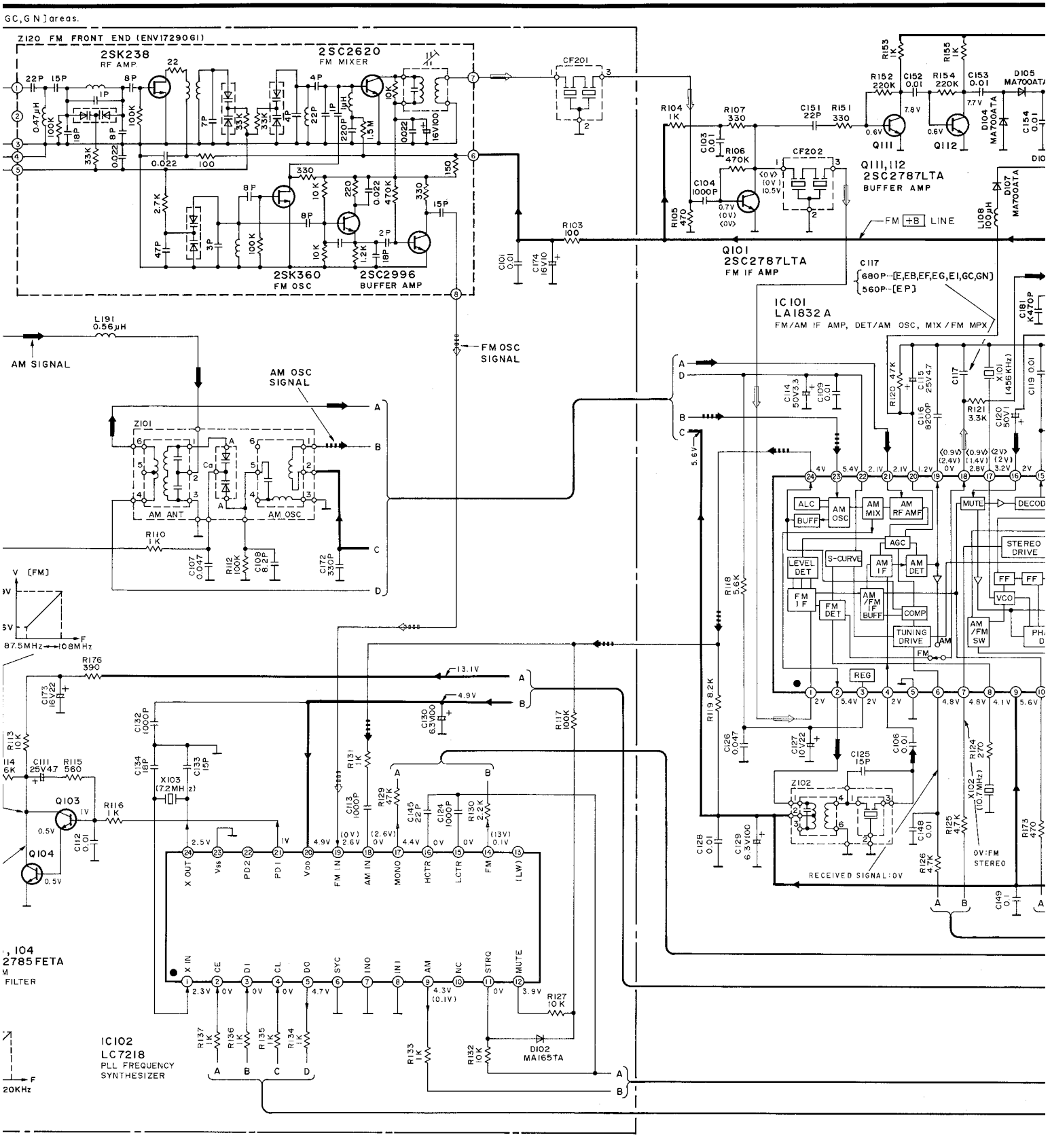

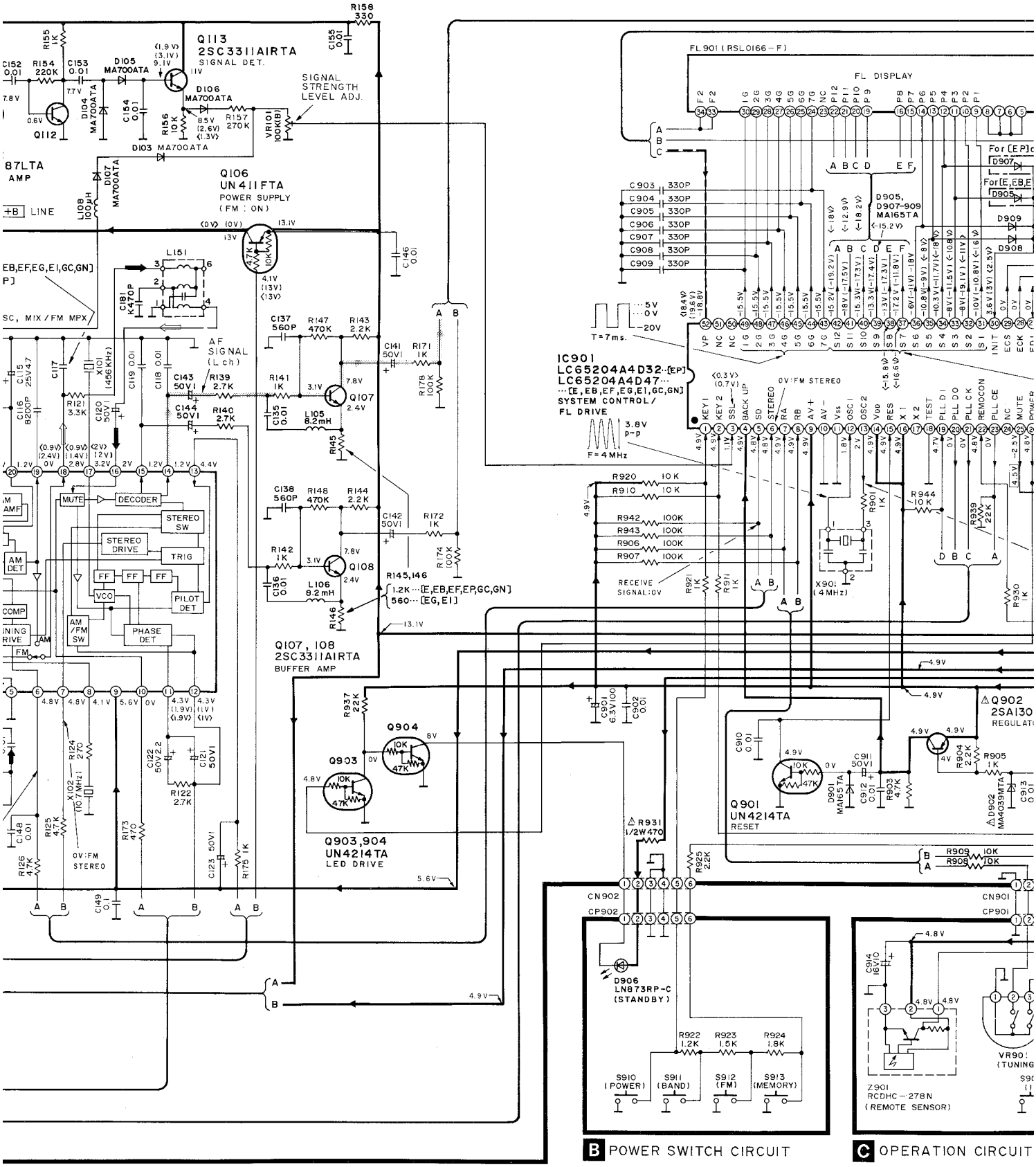
10
11
12
13
14
Q113
2SC3311AIRTA
SIGNAL DET.
SIGNAL STRENGTH LEVEL ADJ.
Q106
UN4111FTA
POWER SUPPLY (FM : ON)
AF SIGNAL (L ch)
Q107
Q108
Q107, 108
2SC3311AIRTA
BUFFER AMP
Q903,904
UN4214TA
LED DRIVE
Q901
UN4214TA
RESET
Q902
2SA130
REGULATOR
IC901
LC65204A4D32···[EP]
LC65204A4D47···
···[E,EB,EF,EG,EI,GC,GN]
SYSTEM CONTROL/
FL DRIVE
FL901 (RSL0166-F)
FL DISPLAY
MUTE
DECODER
STEREO SW
STEREO DRIVE
TRIG
VCO
PILOT DET
PHASE DET
AM/FM SW
FF
AM DET
D906
LN873RP-C
(STANDBY)
S910 (POWER)
S911 (BAND)
S912 (FM)
S913 (MEMORY)
Z901
RCDHC-278N
(REMOTE SENSOR)
B POWER SWITCH CIRCUIT
C OPERATION CIRCUIT

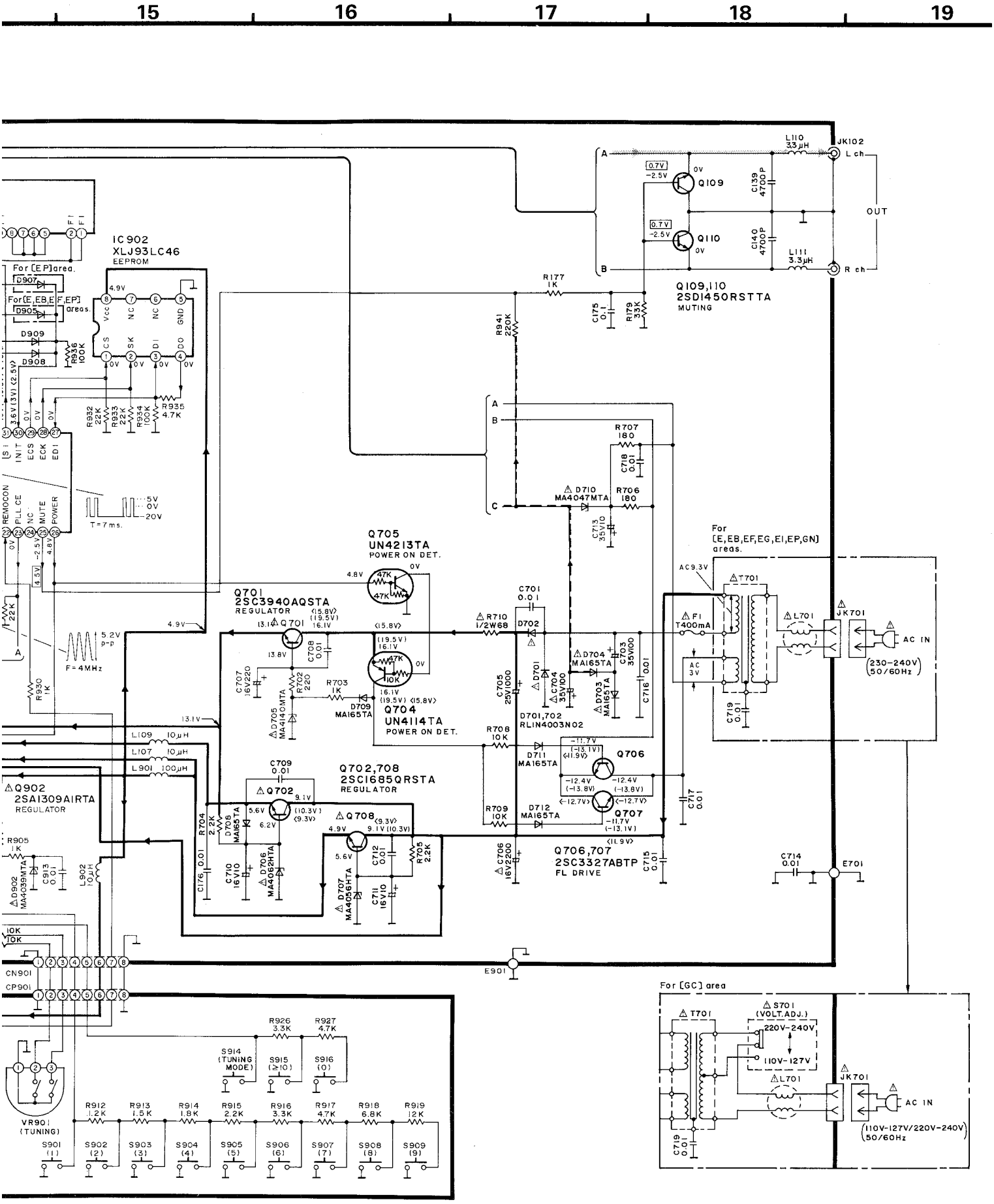
15
16
17
18
19
IC902
XLJ93LC46
EEPROM
For [EP] area.
For [E,EB,EF,EP] areas.
Q109,110
2SD1450RSTTA
MUTING
JK102
L ch
R ch
OUT
Q705
UN4213TA
POWER ON DET.
Q701
2SC3940AQSTA
REGULATOR
Q704
UN4114TA
POWER ON DET.
D701,702
RLIN4003N02
Q702,708
2SC1685QRSTA
REGULATOR
Q706,707
2SC3327ABTP
FL DRIVE
Q902
2SA1309AIRTA
REGULATOR
For [E,EB,EF,EG,EI,EP,GN] areas.
AC IN
(230-240V 50/60Hz)
For [GC] area
S701 (VOLT.ADJ.)
220V-240V
110V-127V
(110V-127V/220V-240V 50/60Hz)
VR901 (TUNING)
S914 (TUNING MODE)
S915 (≥10)
S916 (0)
T=7ms.
F=4MHz
CN901
CP901
E901
E701

CIRCUIT

■ SCHEMATIC DIAGRAM (Parts list on pages 21~24.)

(This schematic diagram may be modified at any time with the development of new technology.)

Notes:

- **S701** : Voltage adj. switch. (110V−127V ↔ 220V−240V)
- **S901~909, 915, 916** : Preset-tuning (1−0, ≥ 10) switches. [S901: 1, S902: 2, S903: 3, S904: 4, S905: 5, S906: 6, S907: 7, S908: 8, S909: 9, S915: ≥ 10, S916: 0]
- **S910** : Power "STANDBY ⏻ /ON" (POWER, STANDBY ⏻ /ON) switch.
- **S911** : Band select (BAND) switch.
- **S912** : FM mode select/FM signal-strength indication (FM) switch.
- **S913** : Memory (MEMORY) switch.
- **S914** : Tuning mode select (TUNING MODE) switch.
- Signal line
  - : AF signal (Lch)
  - : AM OSC signal
  - : AM signal
  - : Positive voltage lines
  - : Negative voltage lines
  - : FM OSC signal
  - : FM signal

- Important safety notice
  Components identified by ⚠ mark have special characteristics important for safety. Furthermore, special parts which have purposes of fire-retardant (resistors), high-quality sound (capacitors), low-noise (resistors), etc. are used as occation calls. When replacing any of components, be sure to use only manufacturer's specified parts shown in the parts list.
- All voltage values shown in circuitry are DC voltage in FM signal (Stereo mono) reception mode.

∗Figures in ( ) Stand for DC-voltage in AM (MW) signal reception mode.

∗Figures in 〈 〉 Stand for DC-voltage in LW signal reception mode.

∗Figures in ▭ stand for DC-voltage in muting mode.

- **Caution!**
  IC and LSI are sensitive to static electricity.
  Secondary trouble can be prevented by taking care during repair.
- Cover the parts boxes made of plastics with alminum foil.
- Ground the soldering iron.
- Put a conductive mat on the work table.
- Do not touch the legs of IC or LSI with the fingers directly.

● Terminal guide of IC's, transistors and diodes

<table>
<tr>
<td>XLJ93LC46
 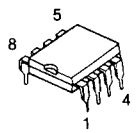
</td>
<td>LA1832A
LC7218
 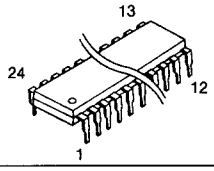
</td>
<td colspan="2"> 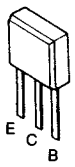

2SA1309AIRTA
2SC2785FETA
2SC2787LTA
2SC3311AIRTA
2SC3311ARSTA
(for (E, EB, EF, EP) areas)
2SD1450RSTTA
UN411FTA
UN4213TA
UN4214TA
UN4114TA</td>
<td>2SC3940AQSTA
2SC1685QRSTA
 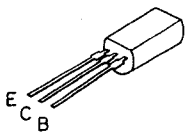
</td>
</tr>
<tr>
<td>2SC3327ABTP
 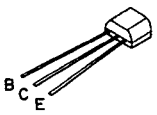
</td>
<td colspan="2"> 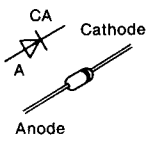

MA4039MTA
MA4047MTA
MA4056HTA
MA4062HTA</td>
<td>MA4140MTA
 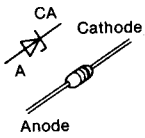
</td>
<td>RL1N4003N02
 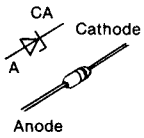
</td>
<td>MA165TA
MA700ATA
 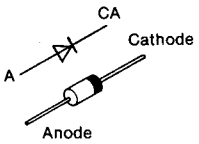
</td>
</tr>
<tr>
<td>LN873RP-C
 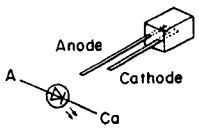
</td>
<td colspan="2"> 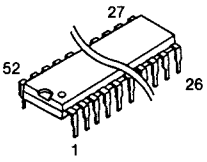

LC65204A4D32
(for (EP) area)
LC65204A4D47
(for others)</td>
<td colspan="3"></td>
</tr>
</table>

■CABINET PARTS LOCATION

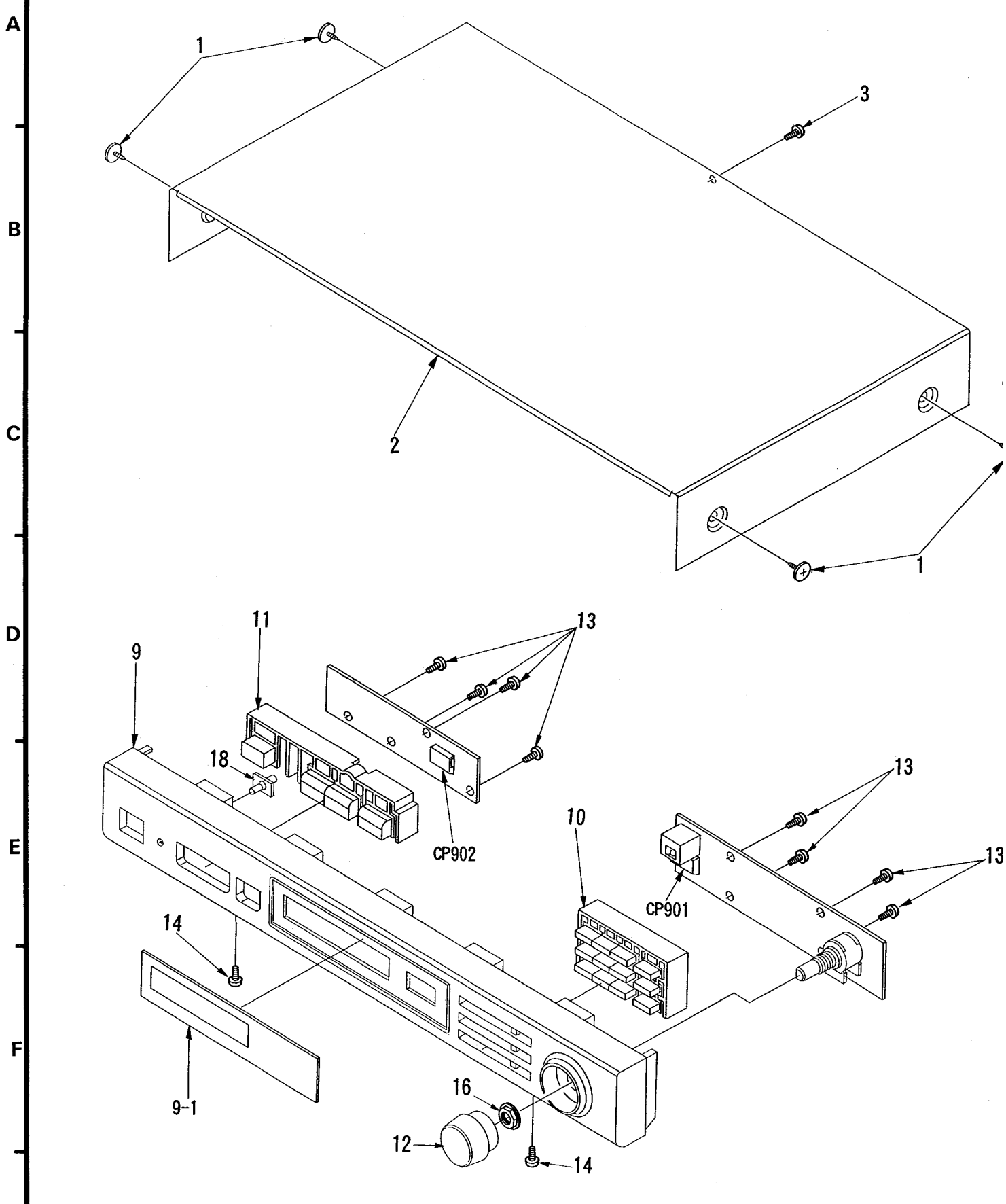

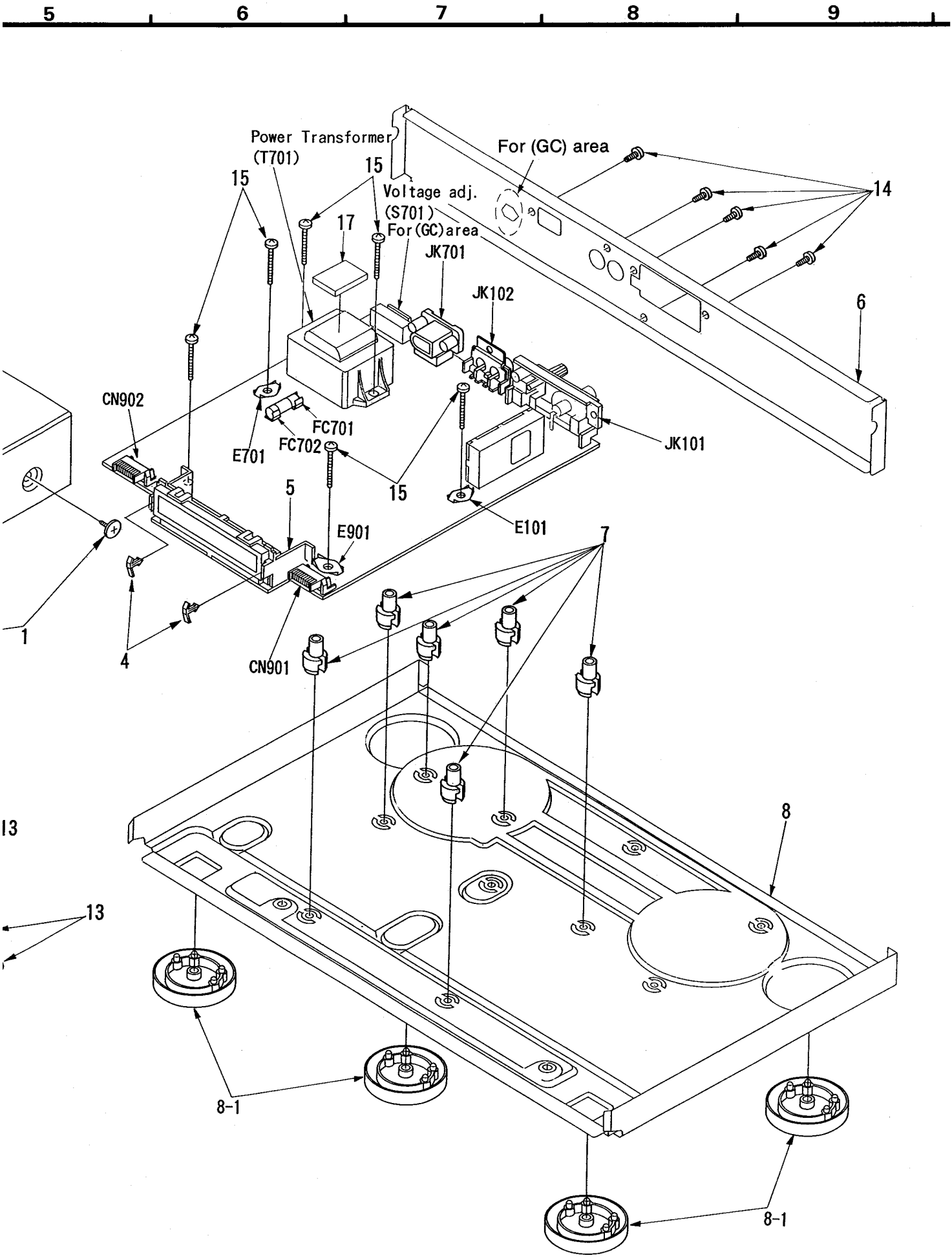
5
6
7
8
9
Power Transformer
(T701)
15
15
17
Voltage adj.
(S701)
For (GC) area
For (GC) area
JK701
JK102
14
6
CN902
E701
FC701
FC702
15
JK101
5
E901
E101
7
1
4
CN901
13
13
8
8-1
8-1

■ REPLACEMENT PARTS LIST

Notes: *Important safety notice:
Components identified by ⚠ mark have special characteristics important for safety.
Furthermore, special parts which have purposes of fire-retardant (resistors), high-quality sound (capacitors), low-noise (resistors), etc. are used.
When replacing any of components, be sure to use only manufacturer's specified parts shown in the parts list.
*The parenthesized indications in the Remarks columns specify the areas. (Refer to the cover page for area.)
Parts without these indications can be used for all areas.
*[F] Indicates in Remarks columns parts are supplied by PFS. (Panasonic France S.A. Longwy division.)

Ref. No.	Part No.	Part Name & Description	Remarks
		CABINET AND CHASSIS	
1	RHD30035-K	SCREW	
2	RKM0032-K	CABINET	
3	XTB3+8JFZ	SCREW	
4	RMN0195	FL PIECE	
5	RMN0251	FL HOLDER	
6	RGR0181A-B	REAR PANEL	(E, EP)
6	RGR0181A-D	REAR PANEL	(EB)
6	RFKHTGT350EF	REAR PANEL ASS'Y	[F] (EF)
6	RGR0181A-C	REAR PANEL	(EG)
6	RGR0181A-F	REAR PANEL	[F] (EI)
6	RGR0181B-B	REAR PANEL	(GC)
6	RGR0181A-D	REAR PANEL	(GN)
7	RKQ0089	P. C. B. SUPPORT	
8	RFKJLPG460-K	CHASSIS ASS'Y	
8-1	RKA0053-A	FOOT	
9	RFKGTGT350E	FRONT PANEL ASS'Y	
9-1	RKW0329-K	TRANSPARENT PLATE	
10	RFKNTK55PPAK	PRESET BUTTON ASS'Y	
11	RFKNTK55PPBK	POWER/MODE BUTTON ASS'Y	
12	RGW0200-K	TUNING KNOB	
13	RHD26017	SCREW	
14	XTBS3+8JFZ1	SCREW	
15	XTB3+20JFZ	SCREW	
16	RHN90001	NUT	
17	RMG0145	TRANSFORMER RUBBER	
18	RGL0227-Q	PANEL LIGHT	
		INTEGRATED CIRCUIT(S)	
IC101	LA1832A	FM/AM IF AMP/AM OSC	
IC102	LC7218	PLL FREQ. SYNTHESIZER	
IC901	LC65204A4D47	SYSTEM CONT./FL DRIVE	(E, EB, EF, EG, EI, GC, GN)
IC901	LC65204A4D32	SYSTEM CONT./FL DRIVE	(EP)
IC902	XLJ93LC46	EEPROM	
		TRANSISTOR(S)	
Q101	2SC2787L	TRANSISTOR	
Q103, 104	2SC2785FE	TRANSISTOR	
Q106	UN411FTA	TRANSISTOR	
Q107, 108	2SC3311AIRTA	TRANSISTOR	
Q109, 110	2SD1450RTA	TRANSISTOR	
Q111, 112	2SC2787L	TRANSISTOR	
Q113	2SC3311AIRTA	TRANSISTOR	
Q191-193	2SC3311ARSTA	TRANSISTOR	(E, EB, EF, EP)
Q701	2SC3940AQSTA	TRANSISTOR	⚠
Q702	2SC1685QRSTA	TRANSISTOR	⚠
Q704	UN4114TA	TRANSISTOR	
Q705	UN4213	TRANSISTOR	
Q706, 707	2SC3327-A	TRANSISTOR	
Q708	2SC1685QRSTA	TRANSISTOR	⚠
Q901	UN4214TA	TRANSISTOR	
Q902	2SA1309AIRTA	TRANSISTOR	⚠
Q903, 904	UN4214TA	TRANSISTOR	
		DIODE(S)	
D102	MA165	DIODE	
D103-107	MA700	DIODE	
D701, 702	RL1N4003N02	DIODE	⚠
D703, 704	MA165	DIODE	⚠
D705	MA4140M	DIODE	⚠
D706	MA4062-H	DIODE	⚠
D707	MA4056HTA	DIODE	⚠
D708, 709	MA165	DIODE	
D710	MA4047MTA	DIODE	⚠
D711, 712	MA165	DIODE	
D901	MA165	DIODE	
D902	MA4039MTA	DIODE	⚠
D905	MA165	DIODE	(E, EB, EF, EP)
D906	LN873RP-C	L. E. D.	
D907	MA165	DIODE	(EP)
D908, 909	MA165	DIODE	
		VARIABLE RESISTOR(S)	
VR101	EVNDXAA00B15	SIGNAL STRENGTH LEVEL ADJ.	
VR901	RRVEC16B12-A	TUNING VOLUME ADJ.	
		COIL(S)	
L101	ELESN1R0MA	COIL	
L105, 106	RLQZB822KT-D	COIL	
L107	RLQA100JT-Y	COIL	
L108	ELEXT101KA9	COIL	
L109	RLQA100JT-Y	COIL	
L110, 111	ELEXT3R3KA9	COIL	
L151	SLM1B10M-1M	COIL	
L191	ELESN1R0MA	COIL	(E, EB, EF, EP)

Ref. No.	Part No.	Part Name & Description	Remarks
L191	ELESNR56MA	COIL	(EG, EI, GC, GN)
L701	RLQZ600M-W	COIL	⚠
L901	ELEXT101KA9	COIL	
L902	RLQA100JT-Y	COIL	
		TRANSFORMER(S)	
T701	RTP1K4E027	POWER TRANSFORMER	⚠
		COMPONENT COMBINATION(S)	
Z101	RLA2Z002M-T	COMPONENT COMBINATION	(EG, EI, GC, GN)
Z102	RLI2Z006M-T	COMPONENT COMBINATION	
Z191	RLA6Z005M-T	COMPONENT COMBINATION	(E, EB, EF, EP)
Z901	RCDHC-278N	REMOTE SENSOR	
		FILTER(S)	
CF201	RLFFETNGD01L	FILTER	
CF202	RLFFETMGD01L	FILTER	
		OSCILLATOR(S)	
X101	RSXZ456KM07	OSCILLATOR(456KHz)	
X102	RLFDGTD011	OSCILLATOR(10.7MHz)	
X103	RSXC7M20S04T	OSCILLATOR(7.2MHz)	
X901	EFOEC4004T4	OSCILLATOR(4MHz)	
		DISPLAY TUBE(S)	
FL901	RSL0166-F	DISPLAY TUBE	
		FM FRONT END PACK ASS'Y(S)	
Z120	ENV17290G1R	FM FRONT END	(E, EB, EF)
Z120	ENV17290G1	FM FRONT END	(EG, EI, GC, GN)
Z120	RAL0021	FM FRONT END	(EP)
		FUSE(S)	
F1	XBA2C04TB0	FUSE, 250V T400mA	⚠
		SWITCH(ES)	
S701	ESD26700A	VOLTAGE ADJ.	(GC)⚠
S901	EVQ21405R	PRESET-TUNING(1)	
S902	EVQ21405R	PRESET-TUNING(2)	
S903	EVQ21405R	PRESET-TUNING(3)	
S904	EVQ21405R	PRESET-TUNING(4)	
S905	EVQ21405R	PRESET-TUNING(5)	
S906	EVQ21405R	PRESET-TUNING(6)	
S907	EVQ21405R	PRESET-TUNING(7)	

Ref. No.	Part No.	Part Name & Description	Remarks
S908	EVQ21405R	PRESET-TUNING(8)	
S909	EVQ21405R	PRESET-TUNING(9)	
S910	EVQ21405R	POWER	
S911	EVQ21405R	BAND	
S912	EVQ21405R	FM	
S913	EVQ21405R	MEMORY	
S914	EVQ21405R	TUNING MODE	
S915	EVQ21405R	PRESET (≥ 10)	
S916	EVQ21405R	PRESET(0)	
		CONNECTOR(S) AND SOCKET(S)	
CN901	RJU003K008M1	SOCKET(8P)	
CN902	RJU003K006M1	SOCKET(6P)	
CP901	RJT003K008-1	CONNECTOR(8P)	
CP902	RJT003K006-1	CONNECTOR(6P)	
		JACK(S)	
JK101	RJH4202M	ANT TERMINAL	
JK102	RJH3201N	LINE OUT	
JK701	SJS9236	AC INLET	(E, EB, EG, EF, EI, EP, GC)
			⚠
JK701	SJSD16	AC INLET	(GN)⚠
		GND PLATE(S)	
E101	SNE1004-2	GND PLATE	
E701	SNE1004-2	GND PLATE	
E901	SNE1004-2	GND PLATE	
		FUSE HOLDER(S)	
FC701, 702	EYF52BC	FUSE HOLDER	

■ RESISTORS AND CAPACITORS

Notes : * Capacity values are in microfarads (uF) unless specified otherwise, P=Pico-farads (pF) F=Farads (F)
* Resistance values are in ohms, unless specified otherwise, 1K=1,000 (OHM), 1M=1,000k (OHM)

Ref. No.	Part No.	Values & Remarks
		RESISTORS
R103	ERDS2TJ101	1/4W 100
R104	ERDS2TJ102	1/4W 1K
R105	ERDS2TJ471	1/4W 470
R106	ERDS2TJ474	1/4W 470K
R107	ERDS2TJ331	1/4W 330
R110	ERDS2TJ102	1/4W 1K
R112	ERDS2TJ104	1/4W 100K
R113	ERDS2TJ103	1/4W 10K
R114	ERDS2TJ562	1/4W 5.6K
R115	ERDS2TJ561	1/4W 560
R116	ERDS2TJ102	1/4W 1K
R117	ERDS2TJ104	1/4W 100K
R118	ERDS2TJ562	1/4W 5.6K
R119	ERDS2TJ822	1/4W 8.2K
R120	ERDS2TJ473	1/4W 47K
R121	ERDS2TJ332	1/4W 3.3K
R122	ERDS2TJ272T	1/4W 2.7K
R124	ERDS2TJ271	1/4W 270
R125, 126	ERDS2TJ472	1/4W 4.7K
R127	ERDS2TJ103	1/4W 10K
R129	ERDS2TJ473	1/4W 47K
R130	ERDS2TJ222	1/4W 2.2K
R131	ERDS2TJ102	1/4W 1K
R132	ERDS2TJ103	1/4W 10K
R133-137	ERDS2TJ102	1/4W 1K
R139, 140	ERDS2TJ272T	1/4W 2.7K
R141, 142	ERDS2TJ102	1/4W 1K
R143, 144	ERDS2TJ222	1/4W 2.2K
R145, 146	ERDS2TJ122	1/4W 1.2K (E, EB, EF, EP, GC, GN)
R145, 146	ERDS2TJ561T	1/4W 560 (EG, EI)
R147, 148	ERDS2TJ474	1/4W 470K
R151	ERDS2TJ331	1/4W 330
R152	ERDS2TJ224T	1/4W 220K
R153	ERDS2TJ102	1/4W 1K
R154	ERDS2TJ224T	1/4W 220K
R155	ERDS2TJ102	1/4W 1K
R156	ERDS2TJ103	1/4W 10K
R157	ERDS2TJ274	1/4W 270K
R158	ERDS2TJ331	1/4W 330
R171, 172	ERDS2TJ102	1/4W 1K
R173	ERDS2TJ471	1/4W 470
R174	ERDS2TJ104	1/4W 100K
R175	ERDS2TJ102	1/4W 1K
R176	ERDS2TJ391	1/4W 390
R177	ERDS2TJ102	1/4W 1K
R178	ERDS2TJ104	1/4W 100K
R179	ERDS2TJ333	1/4W 33K
R191	ERDS2TJ103	1/4W 10K (E, EB, EF, EP)
R192	ERDS2TJ122	1/4W 1.2K (E, EB, EF, EP)
R193	ERDS2TJ182	1/4W 1.8K (E, EB, EF, EP)
R194	ERDS2TJ122	1/4W 1.2K (E, EB, EF, EP)
R195	ERDS2TJ222	1/4W 2.2K (E, EB, EF, EP)
R702	ERDS2TJ221	1/4W 220
R703	ERDS2TJ102	1/4W 1K
R704, 705	ERDS2TJ222	1/4W 2.2K
R706, 707	ERDS2TJ181T	1/4W 180
R708, 709	ERDS2TJ103	1/4W 10K
R710	ERDS1FVJ680T	1/2W 68 ⚠
R901	ERDS2TJ102	1/4W 1K
R903	ERDS2TJ472	1/4W 4.7K
R904	ERDS2TJ222	1/4W 2.2K
R905	ERDS2TJ102	1/4W 1K
R906, 907	ERDS2TJ104	1/4W 100K
R908-910	ERDS2TJ103	1/4W 10K
R911	ERDS2TJ102	1/4W 1K
R912	ERDS2TJ122	1/4W 1.2K
R913	ERDS2TJ152	1/4W 1.5K
R914	ERDS2TJ182	1/4W 1.8K
R915	ERDS2TJ222	1/4W 2.2K
R916	ERDS2TJ332	1/4W 3.3K
R917	ERDS2TJ472	1/4W 4.7K
R918	ERDS2TJ682T	1/4W 6.8K
R919	ERDS2TJ123	1/4W 12K
R920	ERDS2TJ103	1/4W 10K
R921	ERDS2TJ102	1/4W 1K
R922	ERDS2TJ122	1/4W 1.2K
R923	ERDS2TJ152	1/4W 1.5K
R924	ERDS2TJ182	1/4W 1.8K
R925	ERDS2TJ222	1/4W 2.2K
R926	ERDS2TJ332	1/4W 3.3K
R927	ERDS2TJ472	1/4W 4.7K
R930	ERDS2TJ102	1/4W 1K
R931	ERDS1FVJ471T	1/2W 470 ⚠
R932, 933	ERDS2TJ223	1/4W 22K
R934	ERDS2TJ104	1/4W 100K
R935	ERDS2TJ472	1/4W 4.7K
R936	ERDS2TJ104	1/4W 100K
R937	ERDS2TJ223	1/4W 22K
R939	ERDS2TJ223	1/4W 22K
R941	ERDS2TJ224T	1/4W 220K
R942, 943	ERDS2TJ104	1/4W 100K
R944	ERDS2TJ103	1/4W 10K
		CAPACITORS
C101	ECBT1C103NS5	16V 0.01U
C103	ECBT1C103NS5	16V 0.01U
C104	ECBT1H102KB5	50V 1000P
C106	ECBT1C103NS5	16V 0.01U
C107	ECFR1E473KR	25V 0.047U
C108	ECBT1H100JC5	50V 10P (E, EB, EF, EP)
C108	ECBT1H8R2KC5	50V 8.2P (EG, EI, GC, GN)
C109, 110	ECBT1C103NS5	16V 0.01U
C111	ECEA1EKA4R7B	25V 4.7U
C112	ECBT1C103NS5	16V 0.01U
C113	ECBT1H102KB5	50V 1000P
C114	ECEA1HKA3R3B	50V 3.3U
C115	ECEA1EKA4R7B	25V 4.7U
C116	ECBT1C822MS5	16V 8200P
C117	ECQP2A681JZT	200V 680P (E, EB, EF, EG, EI, GC, GN)
C117	ECQP2A561JZT	200V 560P (EP)
C118, 119	ECQB1H103JF3	50V 0.01U
C120, 121	ECEA1HKA010B	50V 1U
C122	ECEA1HKA2R2B	50V 2.2U
C123	ECEA1HKA010B	50V 1U
C124	ECBT1H102KB5	50V 1000P
C125	ECBT1H150JC5	50V 15P
C126	ECFR1E473KR	25V 0.047U
C127	ECEA1AKA220B	10V 22U
C128	ECBT1C103NS5	16V 0.01U
C129, 130	ECEA0JKA101B	6.3V 100U
C132	ECBT1H102KB5	50V 1000P
C133	ECBT1H150JC5	50V 15P
C134	ECBT1H180JC5	50V 18P
C135, 136	ECBT1C103KS5	16V 0.01U
C137, 138	ECBT1H561KB5	50V 560P
C139, 140	ECQB1H472JF3	50V 4700P
C141-144	ECEA1HKA010B	50V 1U
C145	ECBT1H220J5	50V 22P
C146	ECKR1H103ZF5	50V 0.01U
C148	ECBT1C103NS5	16V 0.01U
C149	ECFR1E104ZF5	25V 0.1U
C151	ECBT1H220J5	50V 22P
C152-155	ECBT1C103KS5	16V 0.01U

Ref. No.	Part No.	Values & Remarks
C172	ECBT1H331KB5	50V 330P
C173	ECEA1CKA220B	16V 22U
C174	ECEA1CKA100B	16V 10U
C175	ECFR1E104ZF5	25V 0.1U
C176	ECKR1H103ZF5	50V 0.01U
C181	ECBT1H471KB5	50V 470P
C701	ECKR1H103ZF5	50V 0.01U
C703	ECA1VM101B	35V 100U
C704	ECA1VM101B	35V 100U ⚠

Ref. No.	Part No.	Values & Remarks
C705	ECA1EM102B	25V 1000U
C706	ECA1CM222B	16V 2200U ⚠
C707	ECA1CM221B	16V 220U
C708, 709	ECKR1H103ZF5	50V 0.01U
C710, 711	ECEA1CKA100B	16V 10U
C712	ECKR1H103ZF5	50V 0.01U
C713	ECEA1VKA100B	35V 10U
C714-718	ECKR1H103ZF5	50V 0.01U
C719	ECBT1C103NS5	16V 0.01U

Ref. No.	Part No.	Values & Remarks
C901	ECEA0JKA101B	6.3V 100U
C902	ECKR1H103ZF5	50V 0.01U
C903-909	ECKR1H331KB5	50V 330P
C910	ECKR1H103ZF5	50V 0.01U
C911	ECEA1HKA010B	50V 1U
C912, 913	ECKR1H103ZF5	50V 0.01U
C914	ECEA1CKA100B	16V 10U

■ PACKAGING

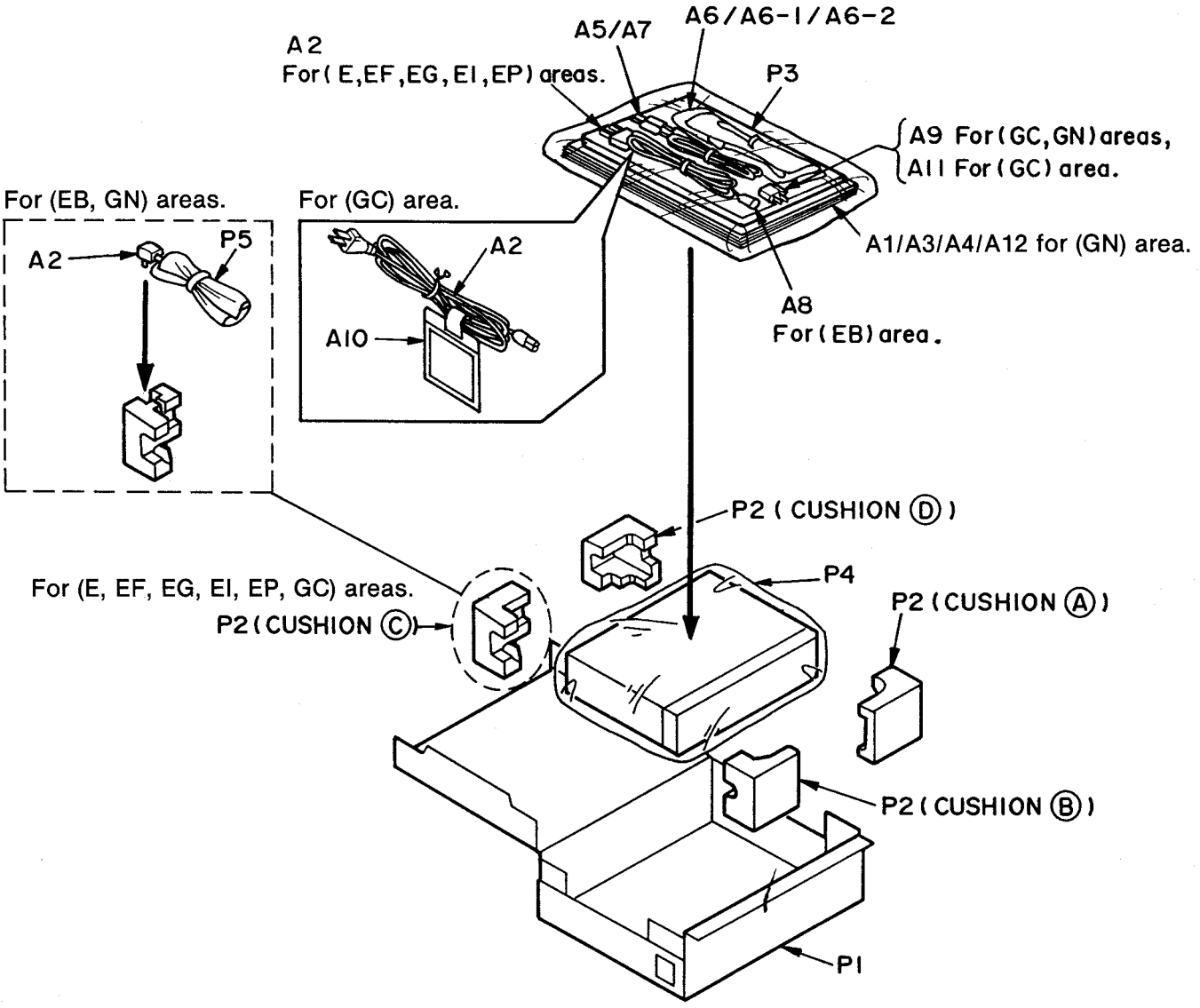

CUSHION Ⓐ Ⓑ Ⓒ Ⓓ : RPN0811 For(E,EG,GC,EP)areas.
: RPN0769-1 For(EB,GN)areas, RPN0325 For(EF,EI) areas.

■ REPLACEMENT PARTS LIST

Notes: *Important safety notice:
Components identified by ⚠ mark have special characteristics important for safety.
Furthermore, special parts which have purposes of fire-retardant (resistors), high-quality sound (capacitors), low-noise (resistors), etc. are used.
When replacing any of components, be sure to use only manufacturer's specified parts shown in the parts list.
*The parenthesized indications in the Remarks columns specify the areas. (Refer to the cover page for area.)
Parts without these indications can be used for all areas.
*The "SF" mark denotes the standrad part.
*[F] Indicates in Remarks columns parts are supplied by PFS. (Panasonic France S.A. Longwy division.)

Ref. No.	Part No.	Part Name & Description	Remarks
		PACKING MATERIAL	
P1	RPG1982	PACKING CASE	(E, EG, GC, EP)
P1	RPG1983	PACKING CASE	(EB)
P1	RPG1985	PACKING CASE	[F] (EF)
P1	RPG1986	PACKING CASE	[F] (EI)
P1	RPG1984	PACKING CASE	(GN)
P2	RPN0811	CUSHION	(E, EG, GC, EP)
P2	RPN0767-1	CUSHION	(EB, GN)
P2	RPN0325	CUSHION	(EF, EI)
P3	RPQ0164	PAD	
P4	XZB52X60A01Z	PROTECTION BAG(UNIT)	
P5	RPH0032	PROTECTION SHEET	(EB, GN)
		ACCESSORIES	
A1	RFKSTGT350E	INSTRUCTION MANUAL ASS'Y	(E)
A1	RQT2345-B	INSTRUCTION MANUAL	(EB)
A1	RFKSTGT350EF	INSTRUCTION MANUAL ASS'Y	(EF)
A1	RQT2348-D	INSTRUCTION MANUAL	(EG)

Ref. No.	Part No.	Part Name & Description	Remarks
A1	RQT2349-V	INSTRUCTION MANUAL	[F] (EI)
A1	RQF2221	INSTRUCTION MANUAL ASS'Y	(EP)
A1	RFKSTGT350GC	INSTRUCTION MANUAL ASS'Y	(GC)
A1	RQT2350-L	INSTRUCTION MANUAL	(GN)
A2	RJA0019-2K	AC POWER SUPPLY CORD	(E, EF, EG, EI, GC, EP)
			⚠ (SF)
A2	VJA0733	AC POWER SUPPLY CORD	(EB) ⚠ (SF)
A2	RJA0036-K	AC POWER SUPPLY CORD	(GN) ⚠ (SF)
A3	RQA0013	WARRANTY CARD	(E, EB, EF, EG, EI)
A3	RQX7433ZA	WARRANTY CARD	(GN)
A4	RQCB0169	SERVICENTER LIST	(E, EB, EF, EG, EI, GC, GN)
A5	RSA0007	FM INDOOR ANT	
A6	RSA0010	AM LOOP ANTENNA SET	
A6-1	RMN0244	AM ANTENNA HOLDER	
A6-2	XTN3+10AFZ	SCREW	
A7	SJP2276	STEREO CONNECTION CABLE	
A8	SJP9009	ATTACHMENT PLUG	(EB)
A9	RFE0014	ANTENNA PLUG	(GC, GN)
A10	RQLA0134	VOLTAGE CAUTION LABEL	(GC)
A11	SJP5213-1	POWER PLUG ADAPTOR	(GC) ⚠
A12	SQX40022	AM STEREO CAUTION LABEL	(GN)

Printed in Japan