Dear Stereo Fan

We thank you for selecting this product and welcome you to the growing family of satisfied Technics product owners around the world.
We feel certain you will get maximum enjoyment from this new addition to your home.
Please read these operating instructions carefully, and be sure to keep them handy for convenient reference.

Contents

Accessories 2
For United Kingdom 2
Suggestions for Safety 3
Connections 4
Front Panel Controls and Functions 5
Before Adjusting the Sound 7
Changing the Tone Quality 8
Changing the Simulated Listening Environments 11
Adjusting the Level of the Specific Frequency 14
Memorizing Your Own Sound 15
Using the "KARAOKE" Function 16
Making a Recording 18
About the Spectrum Display 19
Maintenance 19
Troubleshooting Guide ..... **Back cover**
Technical Specifications ..... **Back cover**

(For areas except continental Europe, United Kingdom and Australia)

CAUTION:
The AC voltage is different according to the area.
Be sure to set the proper voltage in your area before use.
(For details, please refer to the page 4.)

Accessories

- Stereo connection cables 2
- AC power supply cord 1
- Power plug adaptor 1
  (For areas except Continental Europe, United Kingdom and Australia)

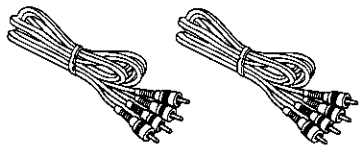

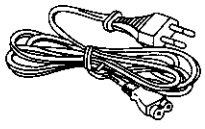

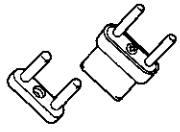

Note: The configuration of the AC power supply cord differs according to area.

For United Kingdom

("EB" area code model only)
The "EB" indication is shown on the serial number tag.

Important
THE WIRES IN THIS MAINS LEAD ARE COLOURED IN ACCORDANCE WITH THE FOLLOWING CODE.
BLUE: NEUTRAL
BROWN: LIVE

As the colours of the wires in the mains lead of this apparatus may not correspond with the coloured markings identifying the terminals in your plug proceed as follows. The wire which is coloured BLUE must be connected to the terminal which is marked with the letter N or coloured BLACK.
The wire which is coloured BROWN must be connected to the terminal which is marked with the letter L or coloured RED.
Under no circumstances must either of the above wires be connected to the earth terminal of a three pin plug.

Suggestions for Safety

■ Use a standard AC wall outlet

1. **Use from an AC power source of high voltage, such as that used for an air conditioner, is very dangerous.**
   A fire might be caused by such a connection.
2. **A DC power source cannot be used.**
   Be sure to check the power source carefully, especially on a ship or other place where DC is used.

■ Grasp the plug when disconnecting the power supply cord

1. **Wet hands are dangerous.**
   A dangerous electric shock may result if the plug is touched by wet hands.
2. **Never place heavy items on top of the power supply cord, nor force it to bend sharply.**

■ Place the unit where it will be well ventilated

Place this unit at least 10 cm (4") away from wall surfaces, etc.

■ Avoid places such as the following:

In direct sunlight or in other places where the temperature is high.

In places where there is excessive vibration or humidity.

Such conditions might damage the cabinet and/or other component parts and thereby shorten the unit's service life.

■ Be sure to place the unit on a flat, level surface

If the surface is inclined, a malfunction may result.

■ Never attempt to repair nor reconstruct this unit

A serious electric shock might occur if this unit is repaired, disassembled or reconstructed by unauthorized persons, or if the internal parts are accidentally touched.

■ Take particular care if children are present

Never permit children to put anything, especially metal, inside this unit. A serious electric shock or malfunction could occur if articles such as coins, needles, screwdrivers, etc. are inserted through the ventilation holes, etc. of this unit.

■ If water is spilled on the unit

Be extremely careful if water is spilled on the unit, because a fire or serious electric shock might occur. Immediately disconnect the power cord plug, and consult with your dealer.

■ Avoid spray-type insecticides

Insecticides might cause cracks or "cloudiness" in the cabinet and plastic parts of this unit. The gas used in such sprays might, moreover, be ignited suddenly.

■ Never use alcohol or paint thinner

These and similar chemicals should never be used, because they might cause flaking or cloudiness of the cabinet finish.

■ Disconnect the power supply cord if the unit will not be used for a long time

If the unit is left for a long time with the power ON, this not only will shorten its useful operation life, but also may cause other trouble.

■ If trouble occurs

If, during operation, the sound is interrupted or indicators no longer illuminate, or if an abnormal odour or smoke is detected, immediately disconnect the power cord plug, and contact with your dealer or an Authorized Service Center.

Connections

Make connections in the numbered sequence by using the included cables.
The illustration below shows an example of connections made when this unit is combined with a Technics electronic component system, and shows only the connections to be made to and from this unit in that combination.

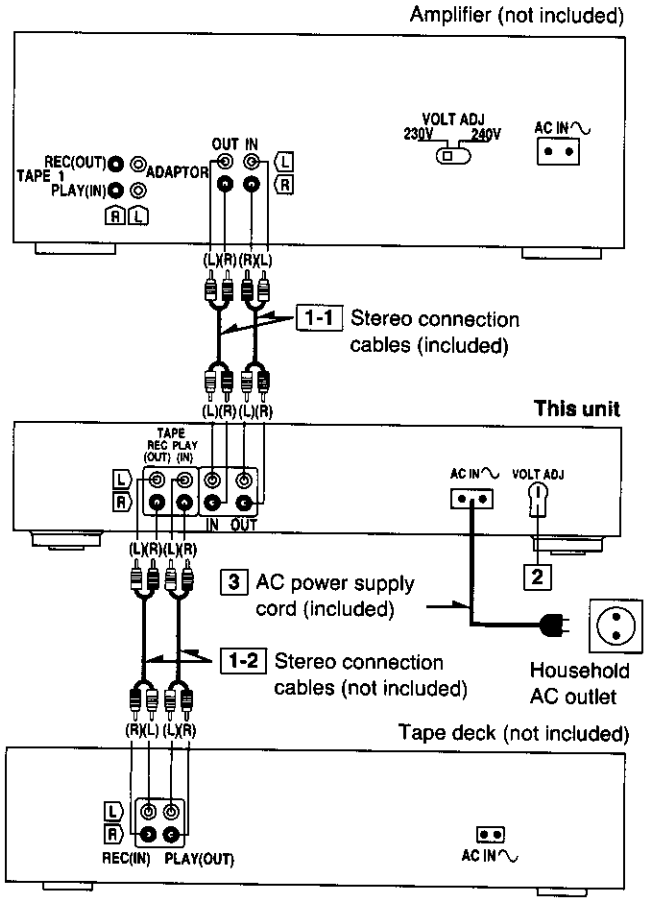

1 Connect the stereo connection cables.

Stereo connection cable
White (L)
Red (R)

1-1 Connect the stereo connection cables (included).
When you have an amplifier which has the terminals for external units (ADAPTOR/GRAPHIC EQ/EXT), connect this unit to those terminals.
When you have an amplifier which has no terminals for external units, connect this unit to the TAPE MONITOR terminal.

1-2 Connect the stereo connection cables (not included).

2 Setting the voltage selector (VOLT ADJ)

(For areas except continental Europe, United Kingdom and Australia)
Set the voltage selector to the voltage setting for the area in which the unit will be used.
[Use a minus (−) screwdriver]

- Note that this unit will be seriously damaged if this setting is not made correctly. (There is no voltage selector for some countries; the correct voltage is already set.)
- If the power supply in your area is 117 V or 120 V, set to the "127 V" position.

3 Connect the AC power supply cord.

Connect the AC power supply cord (included) after all other cables and cords are connected.

For Continental Europe and United Kingdom

Insertion of Connector

Even when the connector is perfectly inserted, depending on the type of inlet used, the front part of the connector may jut out as shown in the drawing.
However there is no problem using the unit.

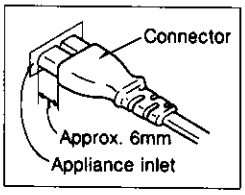

Note:
The configuration of AC power supply cord differs according to area.

For United Kingdom
Household AC outlet

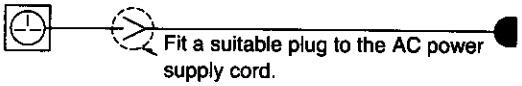

Fit a suitable plug to the AC power supply cord.

For areas except continental Europe, United Kingdom and Australia
If the power plug will not fit your Household AC outlet, use the power plug adaptor (included).



Front Panel Controls and Functions

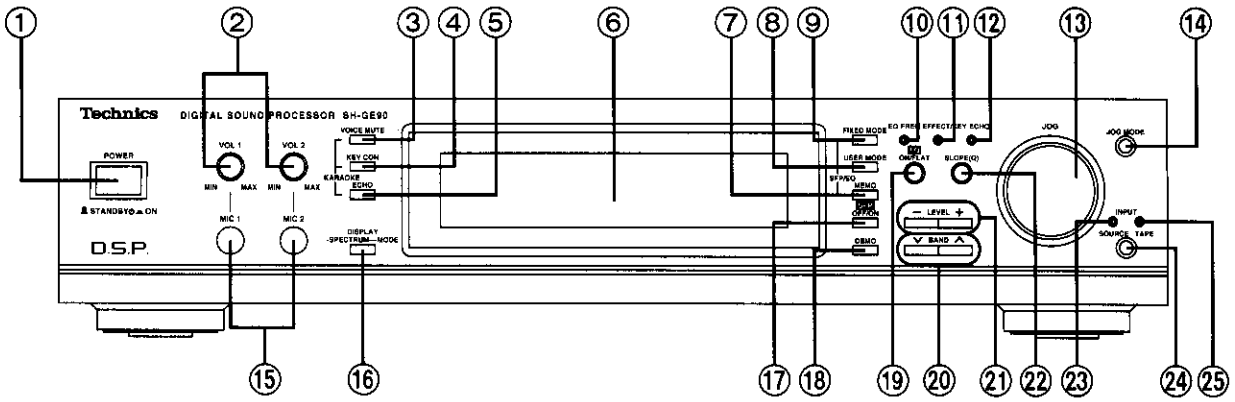

Control section

① Power "STANDBY ⏻/ON" switch (POWER ▮ STANDBY ⏻ ▬ ON)

This switch switches ON and OFF the secondary circuit power only. The unit is in the "standby" condition when this switch is set to the STANDBY ⏻ position. Regardless of the switch setting, the primary circuit is always "live" as long as the power cord is connected to an electrical outlet.

Note:

For this unit, even if this switch is switched to the "STANDBY" position, there is still a slight power consumption of about 2.7 watts; this is in order to assure the retention of the "most recent" memory and the preset-memory functions.

"Power-through" function

Discs, radio broadcasts, etc. can be heard even if the power of this unit is switched to STANDBY.
Note, however, that the power plug should be left connected to the AC outlet.

② Microphone volume controls (VOL1, VOL2)

③ Voice mute button (VOICE MUTE)

This button is used to change "KARAOKE" (using microphone with an accompaniment).

④ Key control button (KEY CON)

This button is used to adjust key level when performing "KARAOKE".

⑤ Echo button (ECHO)

This button is used to adjust the reverberation sound when in performing "KARAOKE".

⑥ Display section

⑦ Memory button (MEMO)

This button is used to store an original equalization curve or simulated listening environments.

⑧ User mode select button (USER MODE)

This button is used to select the user mode of equalization curve or simulated listening environments.

⑨ Fixed mode select button (FIXED MODE)

This button is used to select the fixed mode of equalization curve or simulated listening environments.

⑩ Equalizer frequency indicator (EQ FREQ)

⑪ [illegible]t/key control indicator (EFFECT/KEY)

⑫ Echo indicator (ECHO)

⑬ Sound effect level control (JOG)

This control is used for adjusting the level of simulated listening environments effect, equalization level and specific frequency shift.

⑭ Jog mode button (JOG MODE)

This button is used to control the equalizer frequency, the reverberation sound (effect), the key in the "KARAOKE" mode and the reverberation sound (echo) in the "KARAOKE" mode.

⑮ Microphone jacks (MIC1, MIC2)

⑯ Display mode select button (DISPLAY, -SPECTRUM –MODE)

This button is used to select one of three spectrum curves. If you press and hold this button, the display mode will change.

⑰ SFP OFF/ON button (SFP , OFF/ON)

This button is used to activate Sound Field Processor.

⑱ Demonstration button (DEMO)

This button is used to change sound effects sequentially.

⑲ Equalizer ON/FLAT button (EQ , ON/FLAT)

This button is used to switch the equalizer on or flat.

⑳ Equalizer frequency select buttons (∨ BAND ∧)

These buttons are used to select the equalization frequency.

㉑ Equalizer level-control buttons (– LEVEL +)

These buttons are used to adjust of equalization level.

㉒ Slope (Q) select button [SLOPE (Q)]

㉓ Source indicator

Press the input selector to select "SOURCE", and the source indicator will illuminate to RED.

㉔ Input selector button (INPUT, SOURCE TAPE)

SOURCE: Set to this position to listen to the radio or a compact disc, etc.

TAPE: Set to this position to listen to a tape deck connected to the back of this unit.

㉕ Tape indicator

Press the input selector to select "TAPE", and the tape indicator will illuminate to YELLOW.

Front Panel Controls and Functions

(continued)

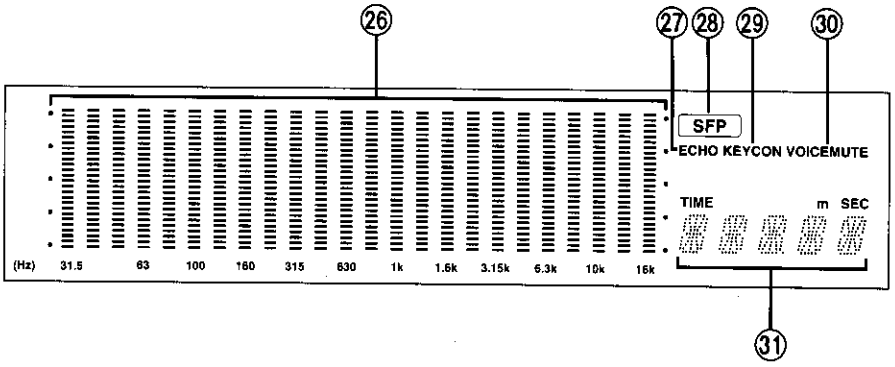

Display section

㉖ Multi level display
This display shows the equalization/spectrum analysis level.

㉗ Echo indicator (ECHO)

㉘ SFP indicator (SFP)
This indicator illuminate to activate simulated listening environments.

㉙ Key control indicator (KEY CON)

㉚ Voice mute indicator (VOICE MUTE)
This indicator illuminates to activate "KARAOKE" function.

㉛ Sound effect display
This display shows the mode of equalization curve or simulated listening environments , or delay time, etc.

Before Adjusting the Sound

Six types of sound quality (equalization curves) and six types of simulated listening environments (SFP=Sound Field Processor) is pre-programmed to this unit. You can also create your own live performance sound by adjusting the frequency level and tone, and store five type of them as "USER" mode sounds.

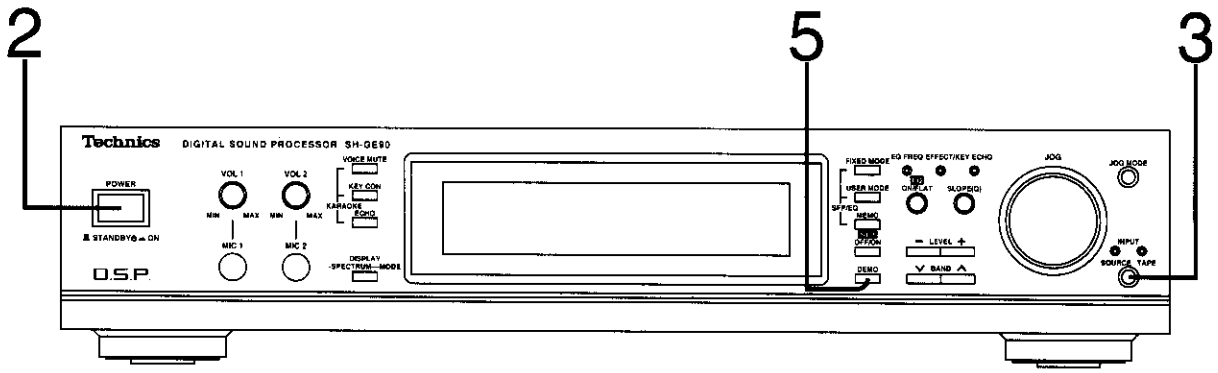

■ Demonstration function

This unit comes with a factory programmed demonstration mode (adjustment example). Use this function for reference of the adjustments of equalization curves and simulated listening environments.

1 Switch the amplifier ON and reduce the volume level of the amplifier.

Set the amplifier's tone controls to the center position, and set the super bass switch (if equipped) to the off positon.

- When you connect this unit to the amplifier with ADAPTOR terminal:
  Set ADAPTOR button of the amplifier to ON.
- When you connect this unit to the amplifier with the tape monitor function:
  Set TAPE MONITOR button of the amplifier to ON.
- When yu connect this unit to the amplifier with the record selector:
  1. Press the "TAPE" input select button of the amplifier.
  2. Select the desired source using the record selector.

2 Switch ON the power switch.

When the power is switched ON, the unit will be in the operation condition after about 4 seconds.

3 Press the input selector button.

SOURCE: Set to this position to listen to the radio or a compact disc, etc.

TAPE: Set to this position to listen to a tape deck connected to the back of this unit.

- The input selector is set to "SOURCE" when you switch ON the power switch.

4 Start the sound source.

(While playing the desired source,)

5 Press the demonstration button.

6 Adjust the volume level of the amplifier.

The six types of equalization curves and the simulated listening environments will be displayed alternately. For the types of the equalization curves and simulated listening environments, see pages 9 and 12.
The sound quality will be changed in sequence as described below.

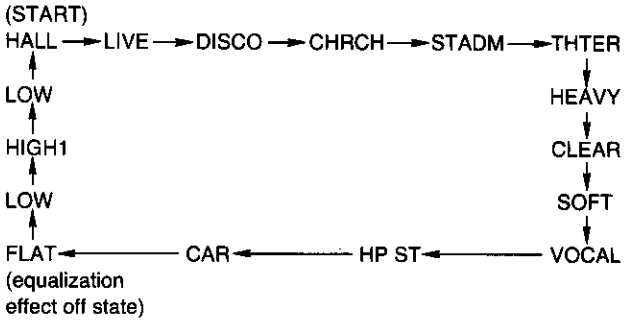

■ To cancel the demonstration

Press the demonstration button.

The demonstration function is cancelled, and the sound will be heard with the sound mode displayed when the demonstration button is pressed.

Changing the Tone Quality

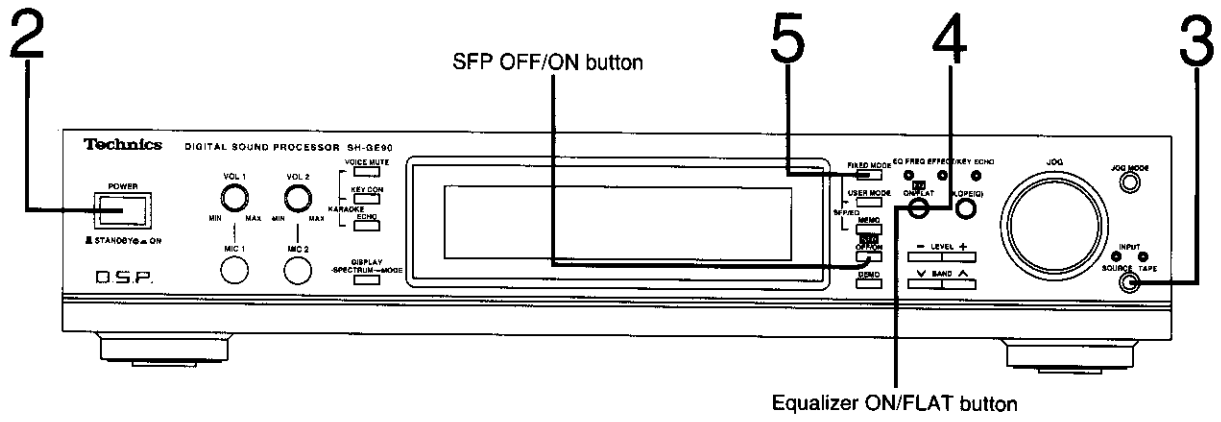

To retrieve equalization curves pre-programmed to this unit

This unit has been pre-programmed with six types of typical equalization curves. (See page 9.)

1 Switch the amplifier ON and reduce the volume level of the amplifier.
Set the amplifier's tone controls to the centre position, and set the super bass switch (if equipped) to the off position.

2 Switch ON the power switch.
- If the SFP indicator illuminates, press the SFP OFF/ON button to go off the indicator before continuing.

3 Press the input selector button.
SOURCE: Set to this position to listen to the radio or a compact disc, etc.
TAPE: Set to this position to listen to a tape deck connected to the back of this unit.

(While playing the desired source,)

4 Press the equalizer ON/FLAT button to ON.
The equalizer on display will appear.

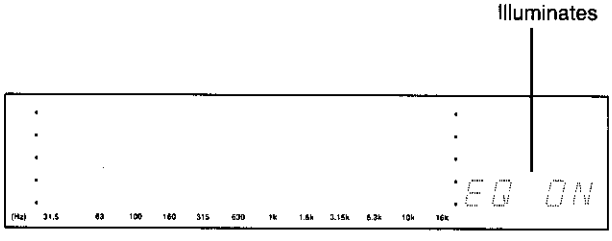

5 Press the fixed mode select button to select the desired equalization curve.
Each press of the fixed mode select button advances the equalization curve setting in the following sequence. About the types of the equalization curves, see page 9.

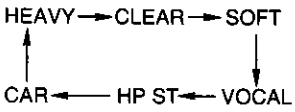

■ To bypass the graphic equalizer

Press the equalizer ON/FLAT button to select FLAT.
The equalizer flat display will appear.

Note:
Do not attempt to adjust the equalization level during recording.

■ About equalization curves pre-programmed to this unit

1 HEAVY
This curve can be used to add "punch" to rock and other music.

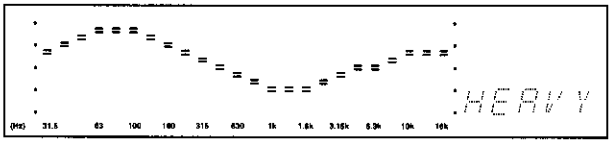

2 CLEAR
This curve can be used to clarify the treble range of jazz, etc.

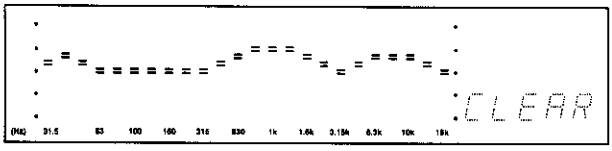

3 SOFT
This curve can be used to listen to background music, etc. at a low volume level.

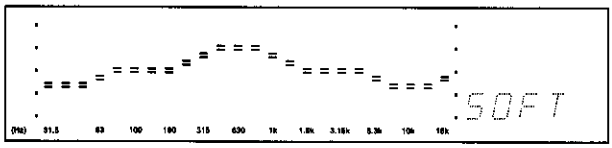

4 VOCAL
This curve can be used to clarify vocal music.

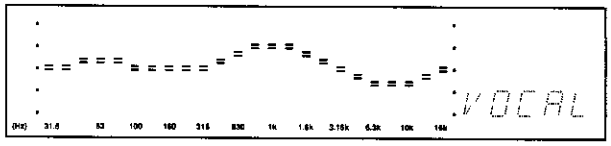

5 HP ST (Headphones stereo)
This curve can be used to make tape recording at optimum state for playback using the stereo cassette player.

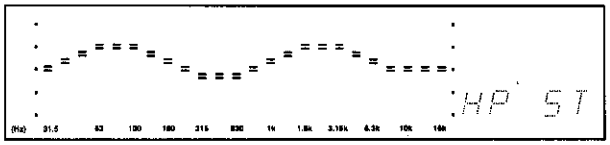

6 CAR (Car stereo)
This curve can be used to make tape recording at optimum state for playback using the car audio system.

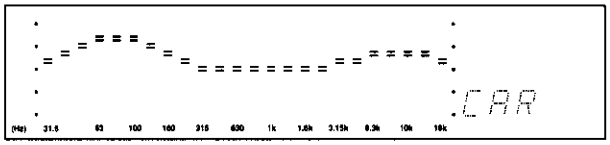

Changing the Tone Quality (continued)

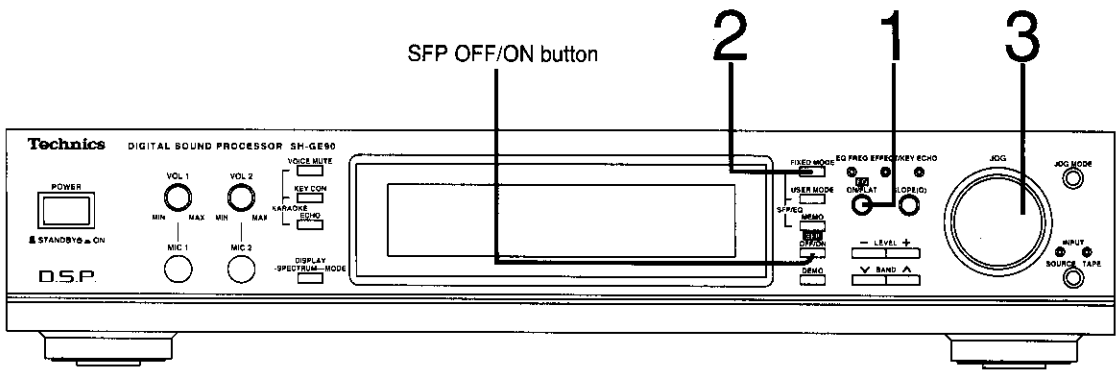

To adjust the level of the equalization curves

The level of the pre-programmed equalization curves can be adjusted in 7 steps using the sound effect level control. (After the adjustment has been done, the pre-programmed equalization curve itself cannot be affected.)

Is the SFP indicator in the off condition?

If the SFP indicator illuminates, press the SFP OFF/ON button to go off the indicator before continuing.

(While playing the desired source,)

1 **Press the equalizer ON/FLAT button to ON.**
The equalizer on display will appear.

2 **Press the fixed mode select button to select the desired equalization curve.**

3 **Adjust the level of the equalization curve using the sound effect level control (JOG).**

: When increase the level

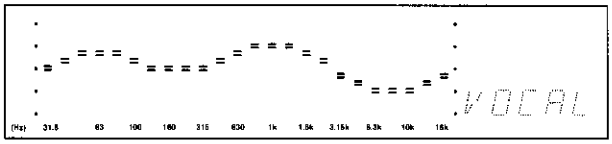

: When decrease the level

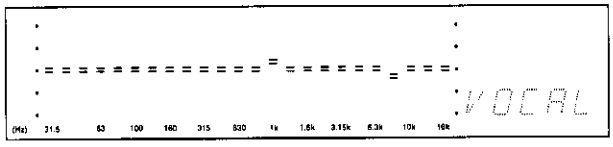

Changing the Simulated Listening Environments

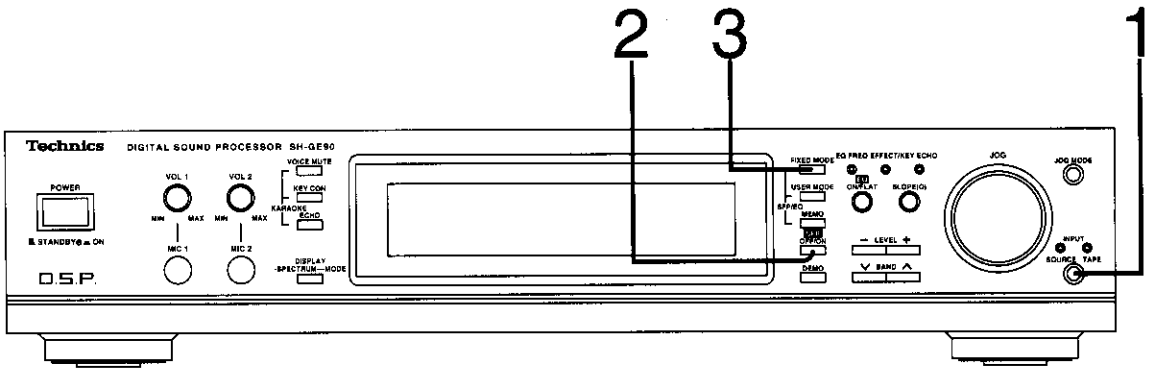

To retrieve the simulated listening environments pre-programmed to this unit

This unit has been pre-programmed with six types of simulated listening environments. The simulated listening environments system named SFP (Sound Field Processor) creates the effect that imparts presence and spread and thereby enhance and enrich the music. (See page 12.)

1 Press the input selector button.

SOURCE: Set to this position to listen to the radio or a compact disc, etc.

TAPE: Set to this position to listen to a tape deck connected to the back of this unit.

(While playing the desired source,)

2 Press the SFP OFF/ON button to ON.

The SFP indicator will illuminate.

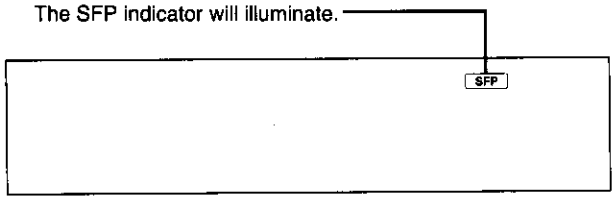

3 Press the fixed mode select button to select the desired simulated listening environments.

Each press of the fixed mode select button advances the simulated listening environments mode in the following sequence. (See page 12.)

HALL → LIVE → DISCO
↑ ↓
THTER ← STADM ← CHRCH

■ To cancel the simulated listening environments

Press the SFP OFF/ON button to go off the SFP indicator.

Changing the Simulated Listening Environments (continued)

■ About the simulated listening environments pre-programmed to this unit

1 HALL
From classical to pop or rock, this function imparts a deep bass and spread which will make you feel as if you were in a large concert hall.

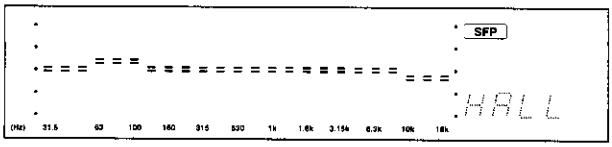

2 LIVE
Primarily for vocal pieces, this function adds gloss to the vocals and you'll feel as though you were hearing a live stage performance.

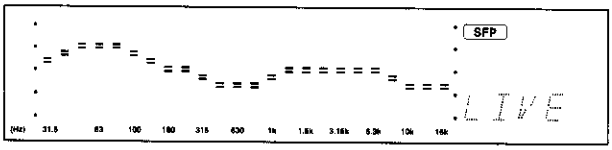

3 DISCO
Especially designed for listening to disco music selections. It creates the long reverberations and powerful bass sounds found in discos.

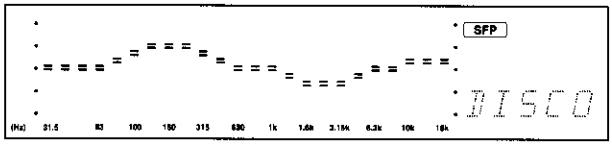

4 CHRCH (CHURCH)
When listening to the sound of the pipe organ, harpsichord, etc., this mode is most effective to create the rich reverberations as if you were in the church.

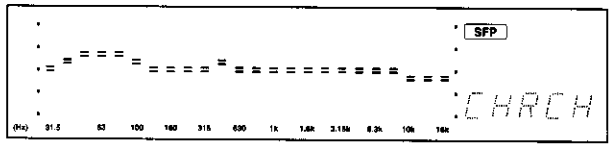

5 STADM (STADIUM)
When listening to baseball or football relay broadcasts, this function automatically sets the appropriate bass level for the announcer's voice (mono) and audience cheers (stereo).

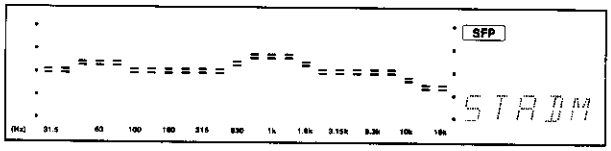

6 THTER (THEATER)
This mode is effective for movie software. Powerful and dynamic sound space available in the movie theater can be realized.

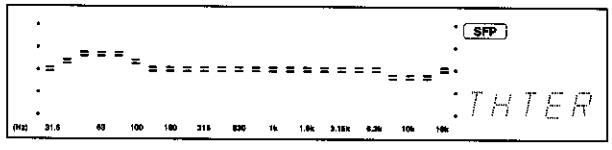

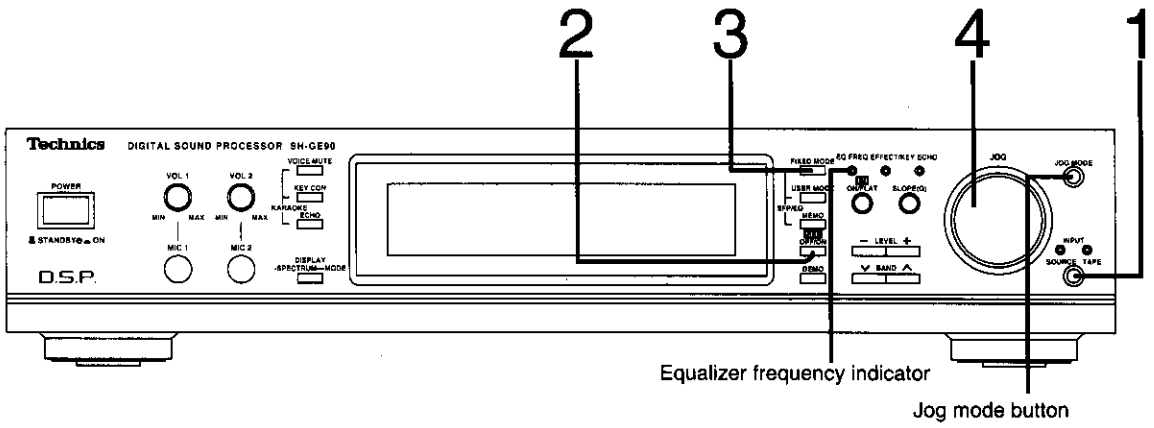

To adjust the reverberation sound effect

The reverberation sound of the simulated listening environments (SFP) can be adjusted using the sound effect level control.
(The pre-programmed simulated listening environments itself cannot be affected after the adjustment has been done.)

1 Press the input selector button.

SOURCE: Set to this position to listen to the radio or a compact disc, etc.

TAPE: Set to this position to listen to a tape deck connected to the back of this unit.

(While playing the desired source,)

2 Press the SFP OFF/ON button to ON.

The SFP indicator will illuminate.

3 Press the fixed mode select button to select the desired simulated listening environments.

4 Adjust the level using the sound effect level control (JOG).

: When increase the effect

: When decrease the effect

The reverberation sound and the equalization curve are automatically adjusted at the same time.

The reverberation sound display

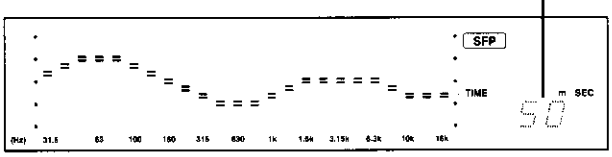

The reverberation sound can be adjusted within the range described below.

Mode	Possible ranges
HALL	1.2–3.2 sec.
LIVE	10–50 msec.
DISCO	0.5–2.5 sec.
CHRCH	3.5–5.5 sec.
STADM	30–130 msec.
THTER	10–30 msec.

■ To adjust the equalization curve after above adjustment has been done

Press the jog mode button to illuminate the equalizer frequency indicator, and then proceed to the step 1 on page 14.

Note:
While the "USER" illuminates, the reverberation sound with equalization effect cannot be adjusted.

Adjusting the Level of the Specific Frequency

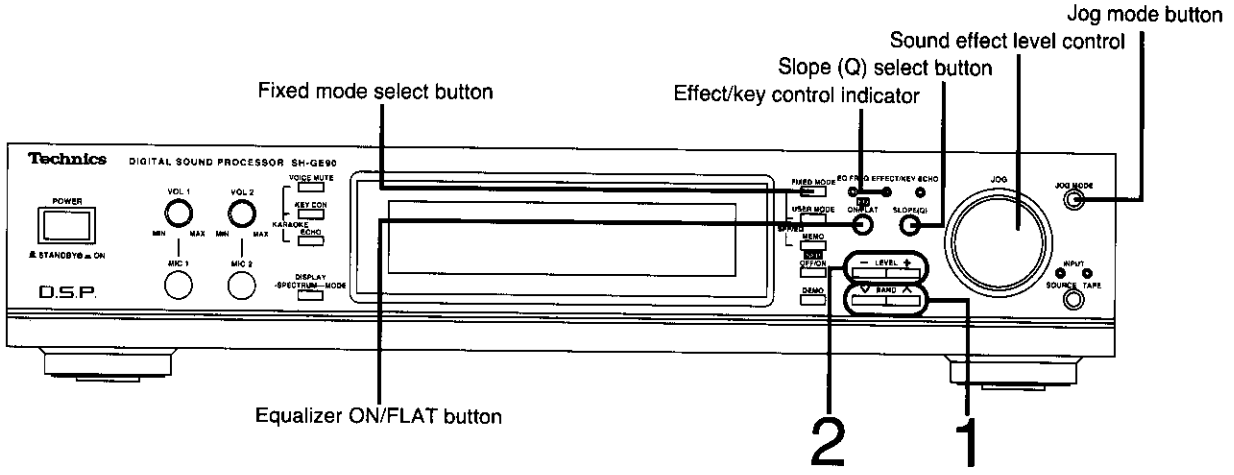

With this unit the frequency of interests can be freely selected with equalizer frequency select buttons, matching it with the music source, and you can enjoy sound as you like.
Furthermore, this unit has a function which makes minimum changes on adjacent frequencies, so that very fine adjustment is possible.

Before continuing, select the desired equalization curve and/or simulated listening environments. (See pages 8 and 11.)

(While playing the desired source,)

1 **Press one of the equalizer frequency select buttons to select the desired frequency.**
Each time one of the equalizer frequency select buttons is pressed, LOW, HIGH1, HIGH2 will be alternately displayed.

LOW: 31.5–220 Hz range
HIGH1: 315 Hz–16 kHz range
HIGH2: 315 Hz–16 kHz range

2 **Press one of the equalizer level control buttons to adjust the frequency level.**

+ : When increase the level
– : When decrease the level

■ To change the curve slope

The curve slope selection changes from "narrow" mode to "wide" mode and vice versa each time the slope (Q) select button is pressed.

Press the slope (Q) select button.
In the "wide" mode the adjacent cursors will be boosted more than while in the "narrow" mode.

■ To shift the curve peak point

The curve peak point can be shifted within the range of 31.5–220 Hz or 315 Hz–16 kHz.

Shift the curve peak point using the sound effect level control.

: When shift the curve peak point from the low frequency sound to the high frequency sound.

: When shift the curve peak point from the high frequency sound to the low frequency sound.

■ To adjust the reverberation sound after the above settings have been done

(When the SFP indicator illuminates,)
Press the jog mode button to illuminate the effect/key control indicator, and then proceed to the step 4 on page 13.

■ To bypass the graphic equalizer

(When the SFP indicator illuminates,)
Press the equalizer ON/FLAT button to select FLAT.
The "USER" display will illuminate.

Note:
The curve slope cannot be shifted within the range from 31.5–220 Hz to 315 Hz–16 kHz. That cannot also be shifted from 315 Hz–16 kHz to 31.5–220 Hz.

Memorizing Your Own Sound

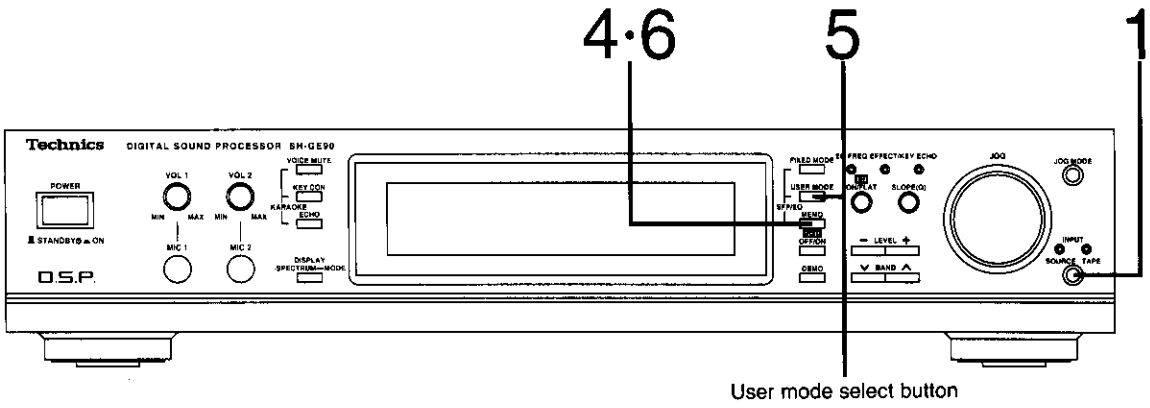

User mode select button

As many as five sound qualities (equalization curves and/or simulated listening environments) can be programmed into and retained by the memory of this unit. It is convenient to program those sound qualities that are frequently used.

1 Press the input selector button.

SOURCE: Set to this position to listen to the radio or a compact disc, etc.

TAPE: Set to this position to listen to a tape deck connected to the back of this unit.

2 Select the desired equalization curve or simulated listening environments.

(See pages 8 and 11.)

3 Adjust the selected equalization curve and/or simulated listening environments.

(See pages 10 and 13–14.)

4 Press the memory button.

The "MEMO" will appear on the display.

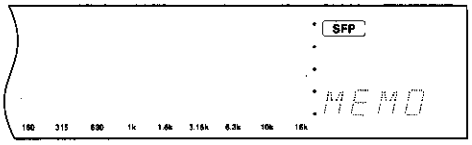

5 Press the user mode select button to select the desired memory number.

Each time this button is pressed, the display will change as follows.

MEMO1 → MEMO2 → MEMO3
↑ ↓
MEMO5 ← MEMO4

6 Press the memory button.

The memory number you select will be displayed as a "USER" number. ("USER 1"~"USER 5")

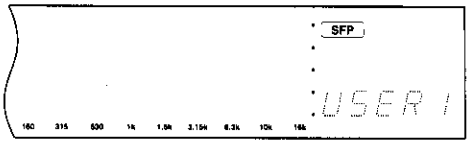

■ To retrieve the USER mode from the memory

Press the user mode select button to select the desired memory number.

Notes:

- The previous setting memorized in a number will be cancelled if a new setting has been memorized in that number.
- The memory will be maintained for as long as approximately 1 month even if the unit is in the standby mode.

Using the "KARAOKE" Function

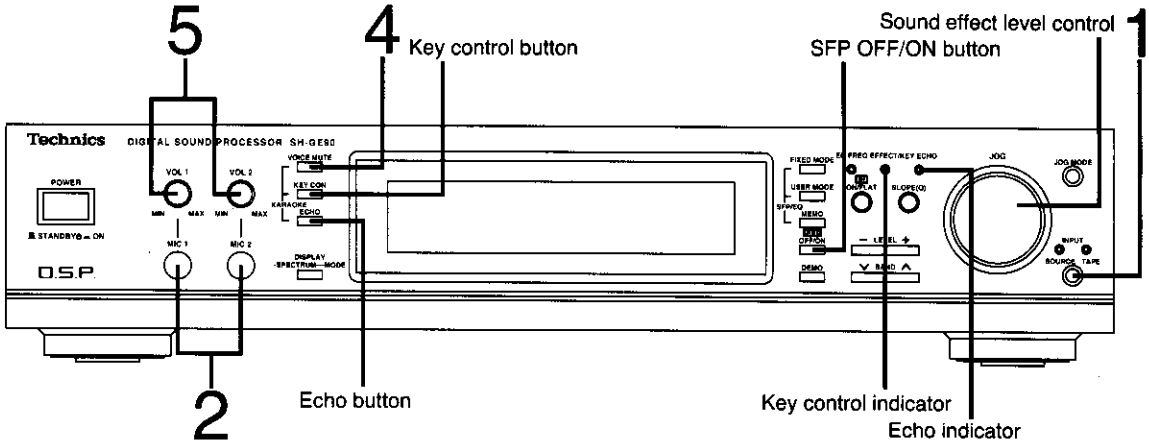

This function attenuates only the singing voice in the tune, so you can easily enjoy karaoke (singing with an accompaniment) with compact discs. You can also make an adjustment of the key and/or the reverberation sound effect.

1 Press the input selector button.

SOURCE: Set to this position to listen to the radio or a compact disc, etc.

TAPE: Set to this position to listen to a tape deck connected to the back of this unit.

2 Connect the microphone to the microphone jacks.

- When connecting the microphone to the microphone jacks, turn down the microphone volume level to MIN.

3 Press the input selector button to select the desired sound source on the amplifier, and start playing the sound source.

4 Press the voice mute button and start microphone mixing.

The voice mute indicator will illuminate, and the singing voice is mixed with the sound.

The below display will appear when you press voice mute button and/or key control button to ON.

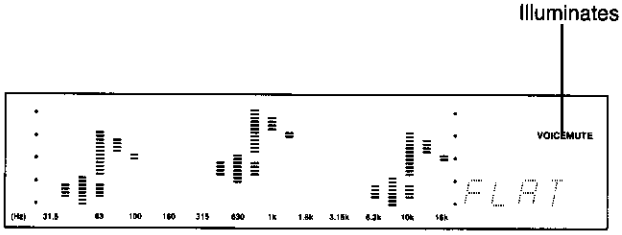

- **To use the compact disc or cassette tape originally designed for "KARAOKE" use**

Be sure to press the voice mute button to go off the voice mute indicator.

To adjust the key, press the key control button to illuminate the key control indicator. (See "To change the key of the tune" right.)

To adjust the reverberation sound, press the echo button to illuminate the echo indicator. (See "To adjust the reverberation sound" right.)

5 Adjust the microphone level using the microphone volume controls.

- If strange noises (Squealing or howling) are emitted during using, keep the microphone far away from the speakers, or turn down the microphone volume.

■ To change the key of the tune

1) **Press the key control button.**
   The key control indicator will illuminate.
2) **Adjust the key using the sound effect level control.**
   The key can be adjusted by semitone within the range from −3.0 to +3.0 in 0.5 step.

■ To adjust the reverberation sound

1) **Press the echo button.**
   The echo indicator will illuminate.
2) **Adjust the reverberation sound using the sound effect level control.**
   The reverberation sound can be adjusted within the range from 0.2 seconds to 1.6 seconds in 0.2 step.

■ To use the karaoke function with simulated listening environments

Press the SFP OFF/ON button to illuminate "SURND" (surround).

■ To cancel the karaoke function

Press the voice mute button to go off the voice mute indicator.

If the key control indicator and echo indicator illuminate, press the key control button and echo button to go off the both indicators.

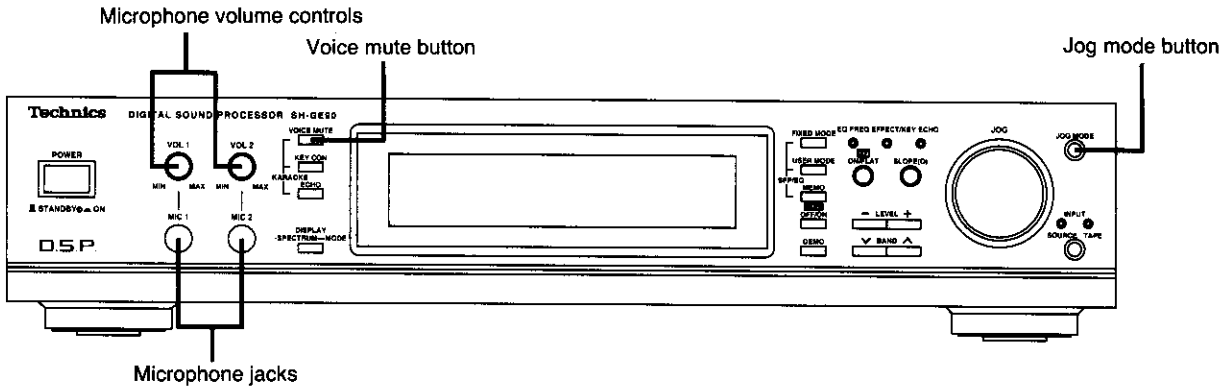

■ To make a mixing recording with karaoke function

Start recording on the cassette deck, and then start microphone mixing with the procedures described on page 16.

- To playback the tape recorded with karaoke function, press the voice mute button to turn off the voice mute indicator.
- To make a mixing recording with the cassette tape originally designed for "KARAOKE" use.
  You can change the tone and simulated listening environments effect in recording.
  1. Press "SOURCE" input select button.
     (Be sure to press the voice mute button to go off the voice mute indicator.)
  2. Start playback the tape on the cassette deck connected to the amplifier, and record on the cassette deck connected to this unit.

Notes:

- The key of the tune and the reverberation sound can be adjusted respectively when each indicator illuminates only. They can be switched using the jog mode button.
- If strange noises (Squealing or howling) are emitted during mixing, keep the microphone far away from the speakers, or turn down the microphone volume.
- When not using the microphone, disconnect the microphone from the microphone jacks, and turn down the microphone volume level to MIN.
- Voice mute may not be effective according to the types of the tune.
- Voice mute cannot be used with the monaural source. When using such source, press the voice mute button to go off the voice mute indicator.

Making a Recording

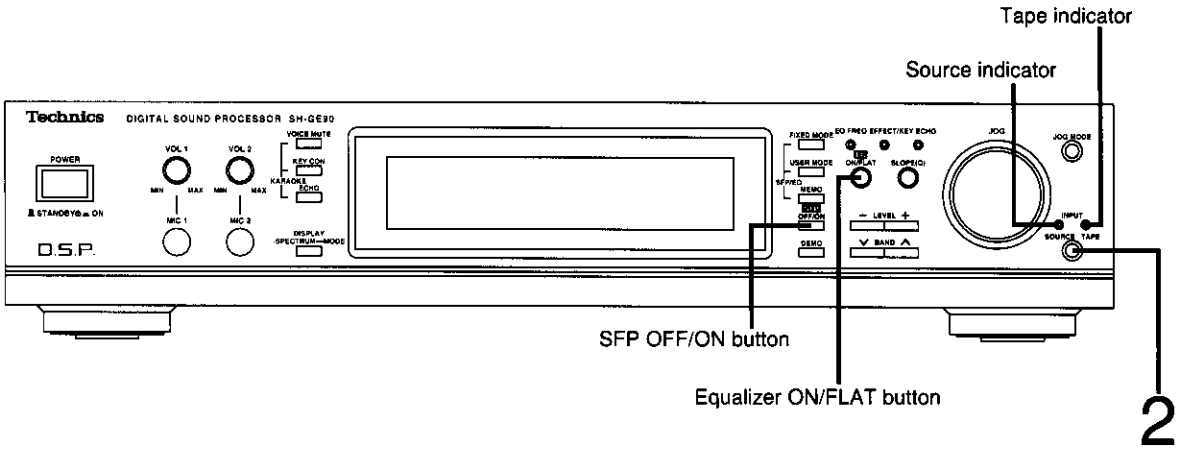

■ To record with desired tone and effect

You can make a recording with the equalization effect and/or simulated listening environments. (See pages 8–14.)
This only works for tape decks connected to this unit.

1 **Select the recording source of the amplifier.**

2 **Press the input selector button to select "SOURCE".**
(Source indicator will illuminate to red.)

3 **Start recording, and then start the sound source.**
(For further information of a recording, refer to the deck operating instructions.)

Notes:

- While recording, do not adjust the level of equalization curve and/or simulated listening environments. It may cause a break in recording.
- If the input selector is set to "TAPE":
  The sound is heard from the speakers with the equalization effect, however, the equalization effect is bypassed in actual recorded sound.

■ To play with desired tone and effect

When playing back such recordings, press the equalizer ON/FLAT button to set "FLAT" and press the SFP OFF/ON button to go off the SFP indicator.

About the Spectrum Display

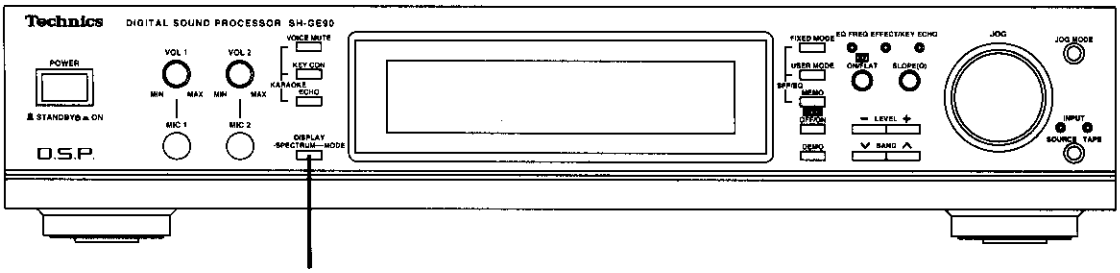

Display mode select button

The spectrum analyzer shows the level of each sound range with three types of display described below.

Press the display mode select button momentarily.

The spectrum display will change as follows.

1 Bar-type display

This display indicates the strength of the sound in each sound range.

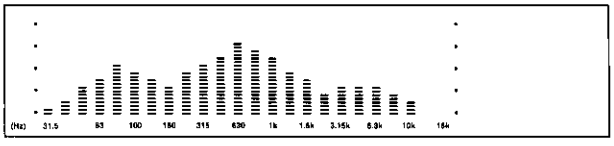

2 Peak-hold display

The peak sound value of each sound range is held on the display for about one second after occurs.

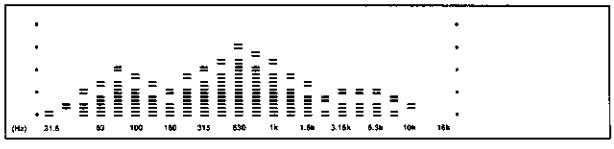

3 Aurora display

The peak sound value of each sound range is displayed in inverted form.

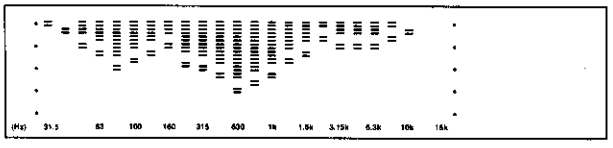

■ To display the equalization curve together with the spectrum analysis display

Press and hold the display mode select button.

The equalization curve will be displayed together with the spectrum analysis display.

To cancel, press and hold the button once again.

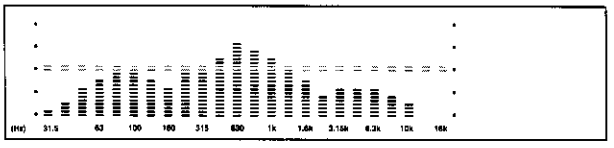

Maintenance

To clean this unit, use a soft, dry cloth.

If the surfaces are extremely dirty, use a soft cloth, dipped into a soap-and-water solution or a weak detergent solution.

Wiring the cloth well before wiping the unit.

Wipe once again with a soft, dry cloth.

Never use alcohol, paint thinner, or benzine, nor a chemically treated cloth to clean this unit.

Such chemicals may damage the finish of your unit.

Troubleshooting Guide

Before requesting service for this unit, check the chart below for a possible cause of the problem you are experiencing. Some simple checks or a minor adjustment on your part may eliminate the problem and restore proper operation.
If you are in doubt about some of the check points, or if the remedies indicated in the chart do not solve the problem, refer to the directory of Authorized Service Centers (enclosed with this unit) to locate a convenient service center, or consult your dealer for instructions.

Problem	Probable cause(s)	Suggested remedy
No sound.	Incorrect connection.	Refer to page 4 and to the Operating Instructions of the amplifier.
Correction is not possible at playback (including recording).	The equalizer ON/FLAT button is set to "FLAT".	Press the equalizer ON/FLAT button to set to "ON".
	The input selector of the equalizer is set to the "TAPE" position.	Press the input selector to set to "SOURCE".

Technical Specifications

(DIN 45 500)

■ EQUALIZER SECTION

Frequency response (center position) 15 Hz–20 kHz, −1 dB
Maximum output voltage 6 V
Rated output voltage 1 V
Rated total harmonic distortion (full scale input)
0.08% (1 kHz)
Input sensitivity 1 V
S/N (full scale input) 86 dB
Maximum input voltage 2.3 V (1 kHz)
Input impedance 47 kΩ
Gain 0±1 dB
Band level controls ±12 dB
3 element parametric equalizer
Center frequency
LOW 31.5, 40, 50, 63, 80, 100, 125, 160, 220 (Hz)
HIGH 1, 2 315, 450, 630, 800, 1 k, 1.25 k, 1.6 k, 2.2 k, 3.15 k, 4.5 k, 6.3 k, 8 k, 10 k, 12.5 k, 16 k (Hz)
(Q) control
Narrow 1.8
Wide 0.7
Fixed mode
Equalizer (6 modes) HEAVY, CLEAR, SOFT, VOCAL, HEADPHONE STEREO, CAR STEREO
Sound Field Processor (6 modes)
HALL, LIVE, DISCO, CHURCH, STADIUM, THEATER

■ KARAOKE SECTION

Key control −300~+300 cent
MIC1, MIC2 1.4 mV/4.7 kΩ
Mic echo 0.2–1.6 sec

■ GENERAL

Power consumption 17 W
Power supply
For Continental Europe, United Kingdom and Australia AC 50/60 Hz, 230–240 V
For others AC 50/60 Hz, 110 V/127 V/220 V/240 V
Dimensions (W×H×D) 430×92×290 mm
Weight 3 kg

Notes:
1. Specifications are subject to change without notice. Weight and dimensions are approximate.
2. Total harmonic distortion is measured by the digital spectrum analyzer.

For United Kingdom only
This apparatus was produced to BS 800.

Matsushita Electric Industrial Co., Ltd.
Central P.O. Box 288, Osaka 530-91, Japan

RQT1633-B