STR-GX311

SERVICE MANUAL

AEP Model

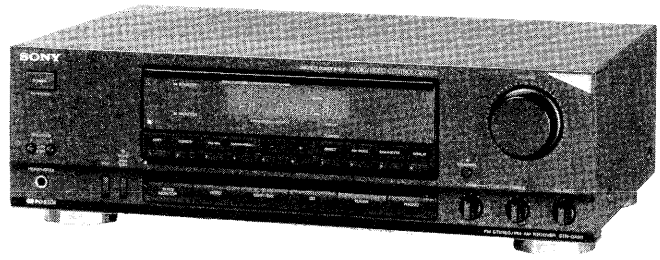

R·D·S EON

SPECIFICATIONS

Amplifier section

	Model for Scandinavian countries, Switzerland, Spain and Portugal	Model for other countries
DIN, 1 kHz	60 W + 60 W (8 ohms)	70 W + 70 W (4 ohms) 60 W + 60 W (8 ohms)
20 Hz – 20 kHz THD 0.3 %	40 W + 40 W (8 ohms)	50 W + 50 W (4 ohms) 40 W + 40 W (8 ohms)

Harmonic distortion
Less than 0.8% at rated output
Frequency response
PHONO: RIAA equalization curve ±0.5 dB
CD, VIDEO, TAPE: 10 Hz - 50 kHz $^{+0}_{-3}$ dB

Inputs

	Sensitivity	Impedance	S/N (weighting network, input level)
PHONO	2.5 mV	50 kilohms	74 dB
CD, VIDEO TAPE 1, 2	200 mV	50 kilohms	95 dB

Outputs

REC OUT, VIDEO (AUDIO) OUT	Voltage 200 mV Impedance 10 kilohms
SPEAKER A, B	Accepts speakers of 8-16 ohms
HEADPHONES	Accepts low and high impedance headphones

Tone controls
BASS: ±10 dB at 100 Hz
TREBLE: ±10 dB at 10 kHz
Loudness
+6 dB (100 Hz)

— Continued on next page —

FM STEREO/FM-AM RECEIVER

SONY®

Tuner section

	FM tuner section	AM tuner section
Tuning range	87.5 – 108 MHz	531 – 1602 kHz
Antenna	75 ohms, unbalanced	External antenna terminal
Sensitivity at 50 dB quieting	18.3 dBf, 2.2 µV (mono) 40 dBf, 24.5 µV (stereo)	—
Usable sensitivity	11.2 dBf, 1 µV (IHF)	Loop antenna: 300 µV (at 999 kHz)
Signal-to-noise ratio	70 dB (mono) 66 dB (stereo)	54 dB (at 50 mV/m)
Harmonic distortion	0.3% (mono), 0.5% (stereo) at 1 kHz	0.5% (at 50 mV/m, 400 Hz)
Selectivity	60 dB at 400 kHz	30 dB at 10 kHz
Separation	45 dB at 1 kHz	—
Frequency response	30 Hz — 15 kHz $^{+0.5}_{-2}$ dB	—

General

System
Tuner section: PLL quartz-locked digital synthesizer system
Preamplifier section: low-noise NF type equalizer amp
Power amplifier section: pure complementary SEPP
Power requirements
220 – 230 V AC, 50/60 Hz
Power consumption
Model for Scandinavian countries, Switzerland, Spain and Portugal: 110 W
Model for other countries: 160 W
AC outlet
One switched (100 W Max.)
Dimensions
Approx. 430 x 135 x 305 mm (w/h/d)
(17 x 5 3/8 x 11 7/8 inches)
including projecting parts and controls
Weight:
Approx. 6.2 kg (13 lb 1 oz)
Accessories supplied
FM wire antenna (1)
AM loop antenna (1)
Remote Commander RM-S103 (1)
Sony batteries SUM-3(NS) (2)

Design and specifications are subject to change without notice.

Note

This appliance conforms with EEC Directive 87/308/EEC regarding interference suppression.

SAFETY-RELATED COMPONENT WARNING!!

COMPONENTS IDENTIFIED BY MARK ⚠ OR DOTTED LINE WITH MARK ⚠ ON THE SCHEMATIC DIAGRAMS AND IN THE PARTS LIST ARE CRITICAL TO SAFE OPERATION. REPLACE THESE COMPONENTS WITH SONY PARTS WHOSE PART NUMBERS APPEAR AS SHOWN IN THIS MANUAL OR IN SUPPLEMENTS PUBLISHED BY SONY.

TABLE OF CONTENTS

Section Title Page

SECTION 1. GENERAL
Identifying the Parts and Controls 3

SECTION 2. ELECTRICAL ADJUSTMENTS 4

SECTION 3. IC PIN FUNCTIONS 5

SECTION 4. DIAGRAMS
4-1. Circuit Boards Location 7
4-2. Semiconductor Lead Layouts 8
4-3. Block Diagram 9
4-4. Printed Wiring Board — Main Section — 11
4-5. Schematic Diagram — Main Section — 15
4-6. Printed Wiring Board — Display Section — 20
4-7. Schematic Diagram — Display Section — 23
4-8. IC Block Diagrams 25

SECTION 5. EXPLODED VIEWS
5-1. Front Panel Section 27
5-2. Chassis Section 28

SECTION 6. ELECTRICAL PARTS LIST 29

MODEL IDENTIFICATION

— BACK PANEL —

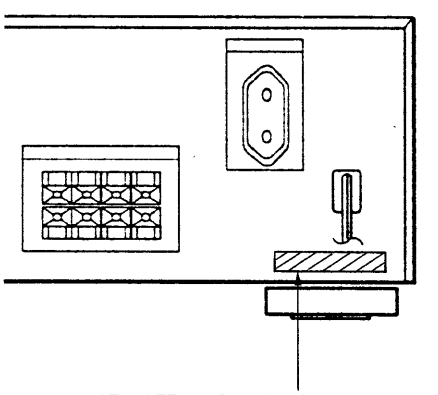

4-957-709-1□ AE2 (AEP2) : Scandinavian countries, Switzerland, Spain and Portugal
4-957-709-0□ AE1 (AEP1) : Other European countries
4-957-709-2□ G : German model

SECTION 1
GENERAL

This section is extracted from instruction manual.

Identifying Parts and Controls

STR-GX311

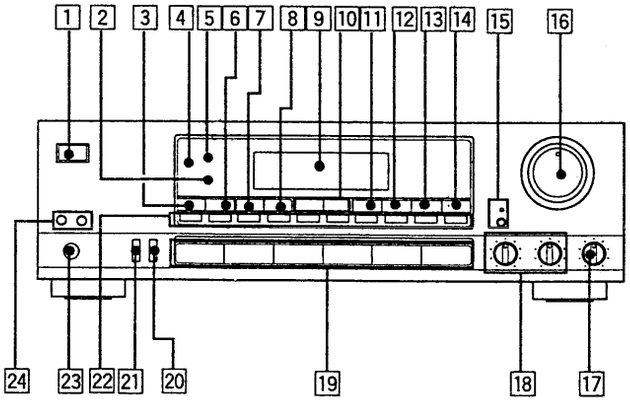

Front Panel

1 POWER switch
2 MONITOR indicator (page 58.)
3 SHIFT button (pages 40 and 42.)
4 Remote sensor
5 STANDBY indicator
The STANDBY indicator lights up when the power cord is connected.
6 MEMORY button (pages 30 and 40.)
7 BAND button (pages 34 and 38.)
8 TUNING/PRESET button (pages 38 and 44.)
9 Display window
10 +/– buttons (pages 38 and 44.)
11 TUNING DIRECT button (page 34.)
12 FM MODE button (page 36.)
13 CHARACTER button (page 30.)
14 DISPLAY button (pages 34 and 52.)
15 LOUDNESS button and indicator (page 26.)
16 VOLUME control (page 26.)
17 BALANCE control (page 26.)
18 BASS/TREBLE controls (page 26.)
19 Function selectors
When the TAPE 2 MONITOR is pressed, the indicator of the last selected function also remains lit. But the TAPE 2 MONITOR button has priority and the taped or digital audio taped program can be heard.
20 EON (TA-NEWS-INFO) button (page 54.)
21 PTY button (page 56.)
22 Numeric buttons (pages 34, 40 and 42.)
23 HEADPHONES jack (page 26.)
24 SPEAKERS A/B buttons (page 26.)

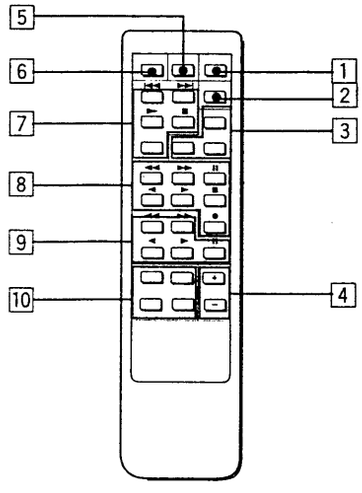

Remote Commander RM-S103

1 POWER button
2 DBFB button*
3 TUNER PRESET +/– and SHIFT buttons
4 VOLUME +/– buttons
5 SURROUND button*
6 MUTING button*
7 CD player operation buttons
D. (disc) SKIP: When your CD player is equipped with a multi-disc changer, use this button to select loaded disc.
CD ►: Selects the CD function and starts CD playback.
8 DECK B operation buttons
(also for single tape deck)
DECK B ◄/►: Select tape function and start tape playback on deck B.
◄◄/►►: Fast winding
II: Pause
■: Stop
●: Recording
9 DECK A operation buttons
DECK A ◄/►: Select tape function and start tape playback on deck A.
◄◄/►►: Fast winding
II: Pause
10 Function select buttons
When one of these buttons is pressed in the STANDBY mode, the power is turned on automatically.

* These buttons does not function for the unit.

Note on the remote commander
For the functions other than the receiver's own ones, the remote commander is effective only with Sony components having a remote sensor with a R mark.

SECTION 2
ELECTRICAL ADJUSTMENTS

- **FM Signal Level Display Adjustment**

Setting:

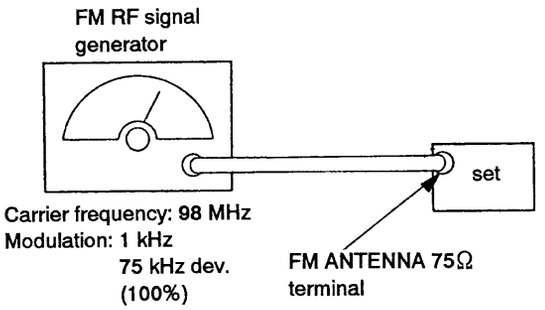

Procedure:

1. Tune the set to 98 MHz.
2. Apply 80 dBμ, 98 MHz signal to the FM antenna terminal.
3. Press the DISPLAY button of the unit to indicate the signal level.
4. Adjust RV1 so that signal level indication is changed from [SIG 71 dB] to [SIG 75 dB].
5. Apply 81 dBμ, 98 MHz signal to the FM antenna terminal.
6. Make sure that the signal level indication is [SIG75▵dB]. If not, repeat step 2 to 6.

[MAIN BOARD] (COMPONENT SIDE)

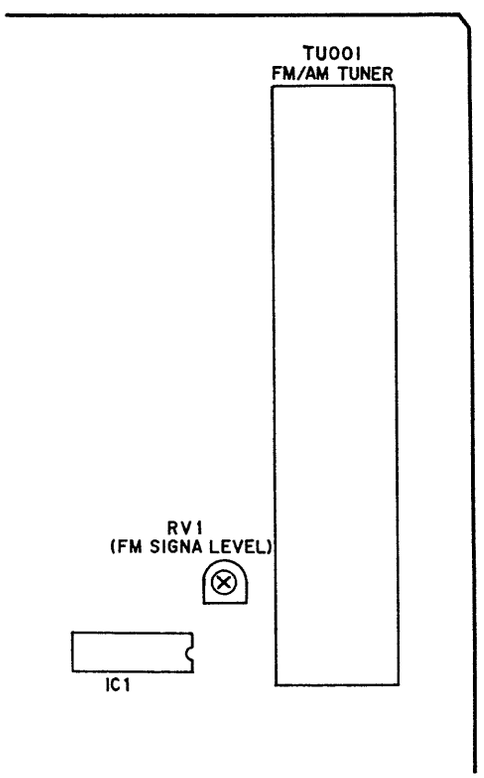

SECTION 3
IC PIN FUNCTIONS

IC300 SYSTEM CONTROL IC (μPD78043GF-044-3B9)

PIN No.	I/O	PIN NAME	FUNCTION
1	O	7G	Drives indicator tube.
2	O	6G	Drives indicator tube.
3	O	5G	Drives indicator tube.
4	O	4G	Drives indicator tube.
5	O	3G	Drives indicator tube.
6	O	2G	Drives indicator tube.
7	O	1G	Drives indicator tube.
8	–	V_{DD}	5V
9	I	RDS-CLOCK	RDS CLOCK input.
10		NC	
11	I	RDS-DATA	RDS DATA input.
12	O	RDS-RESET	RESET output for LC7073M.
13	O	LATCH	FUNCTION output for tuner.
14	O	CLOCK	
15	O	DATA	
16		IF-D	IF COUNT DATA input.
17	I	$\overline{\text{RESET}}$	System RESET input.
18	I	$\overline{\text{A-STOP}}$	TUNED input.
19	I	$\overline{\text{STEREO}}$	"L" when STEREO is received.
20	–	GND	
21	I	$\overline{\text{POWER IN}}$	POWER ON/OFF input.
22	I	FUNC SEL	Fixed "H".
23	I	FUN 2	Input for detecting motor FUNCTION position.
24	I	FUN 1	Input for detecting motor FUNCTION position.
25	I	FUN 0	Input for detecting motor FUNCTION position.
26	I	SIGNAL	SIGNAL input.
27	I	KEY 1	KEY input port.
28	I	KEY 0	KEY input port.
29	–	A/D V_{DD}	A/D converter power supply.
30	I	A/D REF	A/D converter power supply reference voltage.
31	–	GND	
32		NC	
33	–	GND	
34	I	X1	Oscillation signal input (4.19MHz).
35	O	X2	Oscillation signal output (4.19MHz).
36	O	FUN CCW	Operates the motor for motor FUNCTION.
37	O	FUN CW	Operates the motor for motor FUNCTION.
38	O	VOL–	Motor for VOL. "H" when DOWN.
39	O	VOL+	Motor for VOL. "H" when UP.
40	–	GND	

PIN No.	I/O	PIN NAME	FUNCTION
41	O	T-MUT	TUNER MUTE output.
42	O	$\overline{\text{P-MUT}}$	PROTECT MUTE output.
43	O	$\overline{\text{F-MUT}}$	FUNCTION MUTE output.
44	I	$\overline{\text{PROTECT IN}}$	PROTECT detection input.
45	I	$\overline{\text{RDS-START}}$	RDS DATA START pin.
46	I	$\overline{\text{R-IN}}$	Remote commander input.
47	I	$\overline{\text{STOP}}$	Power ON/OFF Monitor.
48		NC	Fixed "L".
49		SP-RY	Activates SPEAKER RELAY.
50	O	POWER RY	Activates POWER RELAY.
51	I	RDS-ID	RDS-ID detection input.
52	–	V_{DD}	5V
53	O	STANBY	Activates standby LED.
54	O	$\overline{\text{VOL-LED}}$	Activates VOL-LED.
55	O	TAPE2-RELAY	Activates TAPE 2 relay.
56	O	S-DIRECT-RELAY	Activates source direct relay.
57	–	GND	
58	–	GND	
59	–	GND	
60	–	GND	
61		LOUDNESS	LOUDNESS CONTROL output.
62	O	P15	Drives indicator tube.
63	O	P14	Drives indicator tube.
64	O	P13	Drives indicator tube.
65	O	P12	Drives indicator tube.
66	O	P11	Drives indicator tube.
67	O	P10	Drives indicator tube.
68	O	P9	Drives indicator tube.
69	O	P8	Drives indicator tube.
70	O	P7	Drives indicator tube.
71	–	– 24V	– 24V
72	O	P6	Drives indicator tube.
73	O	P5	Drives indicator tube.
74	O	P4	Drives indicator tube.
75	O	P3	Drives indicator tube.
76	O	P2	Drives indicator tube.
77	O	P1	Drives indicator tube.
78	O	10G	Drives indicator tube.
79	O	9G	Drives indicator tube.
80	O	8G	Drives indicator tube.

SECTION 4
DIAGRAMS

4-1. CIRCUIT BOARDS LOCATION

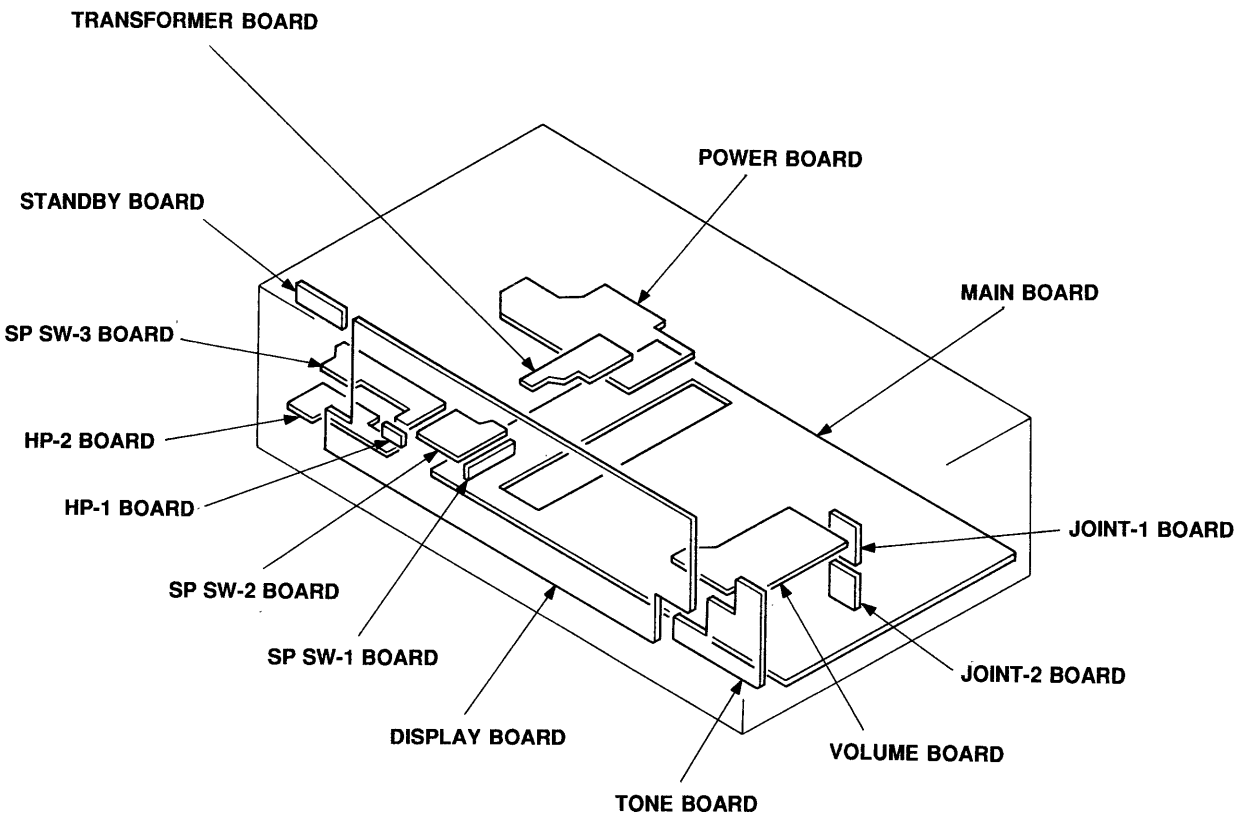

4-2. SEMICONDUCTOR LEAD LAYOUTS

BA6208
uPC4570HA-1

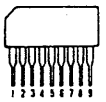

GP1U58XB

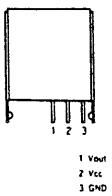

LA1235
SAA6579

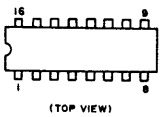

LC7073

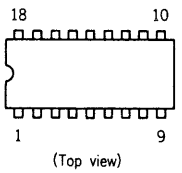

LC7822

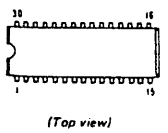

M5218AL

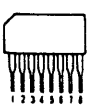

uPD78043GF-044-3B9

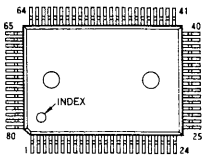

DTA124ES
DTC114TS
2SA1175-HFE
2SC2785-HFE
2SC3623A-LK

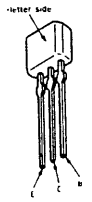

DTC124ES



2SA979-FG

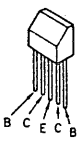

2SA988-PAFAEA



2SA1221-K
2SC2958



KSA708
2SD2012

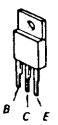

2SB1587-OPY
2SD2438-OPY

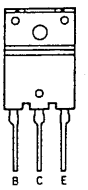

2SD809-K

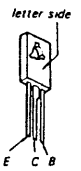

2SK246-GR3



uPC4558C

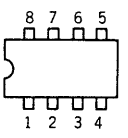

HZS4ALL
UZ-12BSB
UZ-13BSB
UZL-24L
UZ-6.2BSC
1N4148M
1S1585

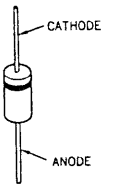

HZS6C3L
UZ-4.3BSB
11ES2

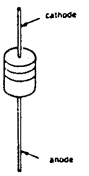

RBV-402

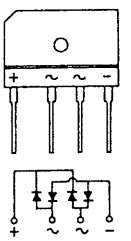

SEL3210S-CD
SEL3810A-CD

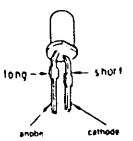

4-3. BLOCK DIAGRAM

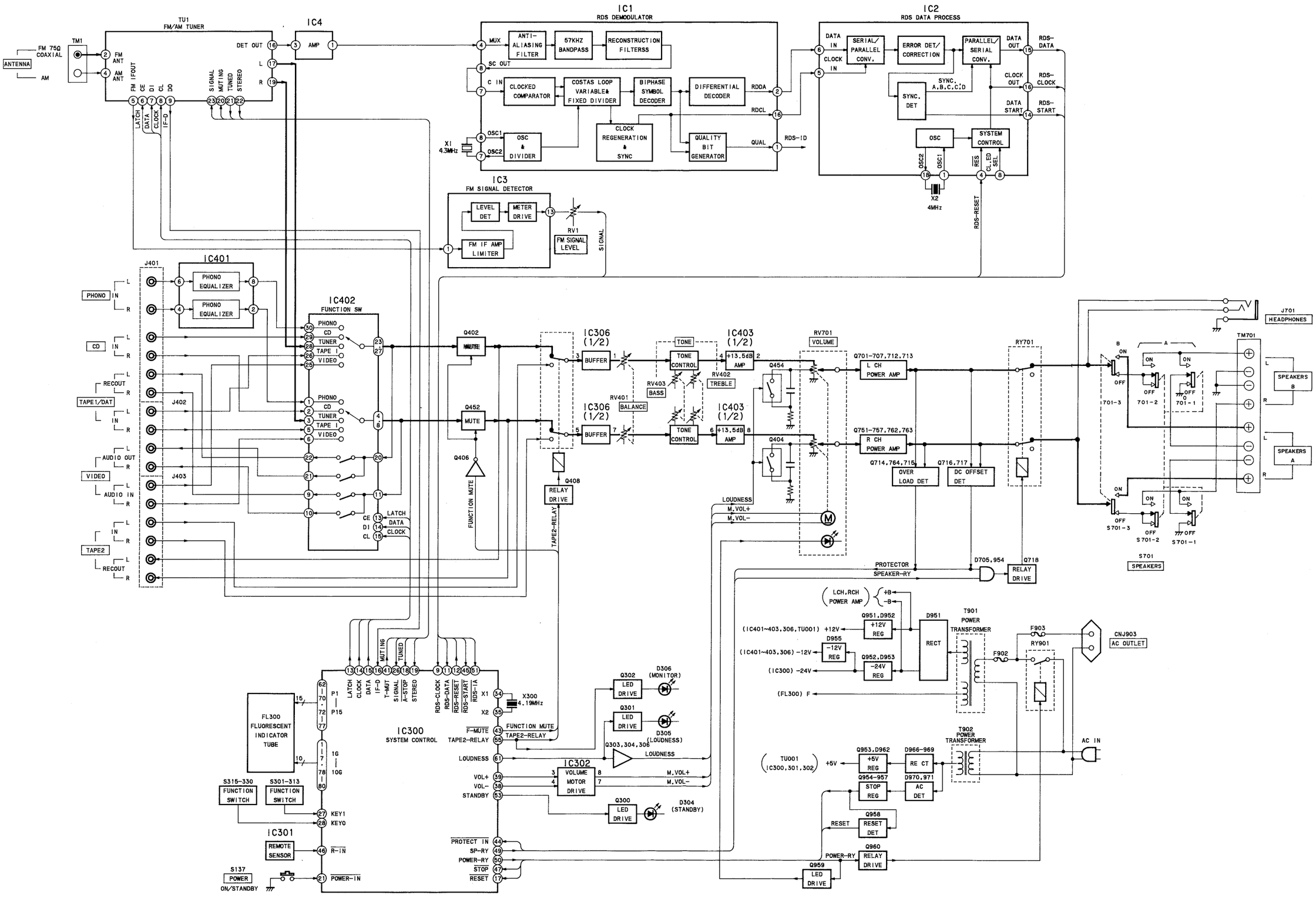

4-4. PRINTED WIRING BOARD — MAIN SECTION —

• See page 7 for Circuit Boards Location and see page 8 for Semiconductor Lead Layouts.

• Semiconductor Location

Ref. No.	Location	Ref. No.	Location
D401	J-10	Q713	G-15
D403	C-14	Q714	H-13
D404	H-2	Q715	H-12
D701	F-11	Q716	G-11
D702	G-11	Q717	G-11
D703	H-13	Q718	H-11
D704	J-14	Q751	E-11
D705	G-12	Q752	C-12
D751	E-11	Q753	E-12
D752	E-11	Q754	E-11
D753	D-13	Q755	D-12
D901	G-24	Q756	E-14
D951	E-13	Q757	D-12
D952	I-9	Q762	F-15
D953	G-10	Q763	D-15
D954	G-12	Q764	E-13
D955	G-10	Q951	H-8
D956	H-11	Q952	H-10
D962	I-13	Q953	I-12
D963	J-13	Q954	I-13
D964	I-13	Q955	I-12
D965	H-12	Q956	I-12
D966	I-12	Q957	H-12
D967	I-12	Q958	H-12
D968	I-12	Q959	G-10
D969	I-12	Q960	I-11
D970	J-12		
D971	J-12		
IC1	F-8		
IC2	F-8		
IC3	E-8		
IC4	E-7		
IC906	E-10		
IC401	C-9		
IC402	C-10		
IC403	G-3		
Q402	C-12		
Q404	G-2		
Q406	I-8		
Q408	C-14		
Q452	C-12		
Q454	G-4		
Q701	F-11		
Q702	F-11		
Q703	F-12		
Q704	F-11		
Q705	H-12		
Q706	G-14		
Q707	G-12		
Q712	H-15		

Note:

- ○—— : parts extracted from the components side.
- ●—— : parts extracted from the components side.
- ▨ : Pattern from the side which enable seen.

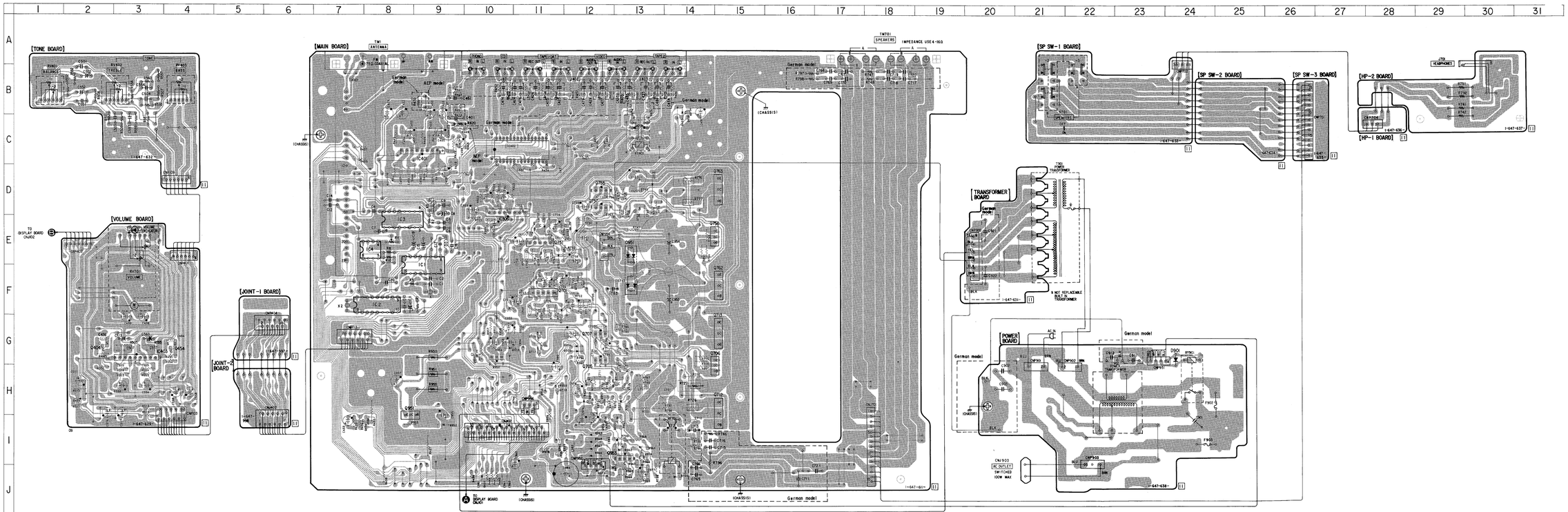

Note:
- All capacitors are in µF unless otherwise noted. pF=µµF 50WV or less are not indicated except for electrolytics and tantalums.
- All resistors are in Ω and 1/4W or less unless otherwise specified.
- % : indicates tolerance.
- ▭ : Panel designation.
- ▬ : nonflammable resistor.

Note: The components identified by mark Δ or dotted line with mark Δ are critical for safety. Replace only with part number specified.

- ═══ : B+ Line
- ═══ : B− Line
- Voltage and waveforms are dc with respect to ground under no-signal conditions. no mark : FM ( ) : AM
- Voltages are taken with a VOM (Input impedance 10MΩ).
- Voltage variations may be noted due to normal production tolerances.
- Signal path. ⇨ : FM

4-5. SCHEMATIC DIAGRAM — MAIN SECTION —

• See page 25, 26 for IC Block Diagrams.

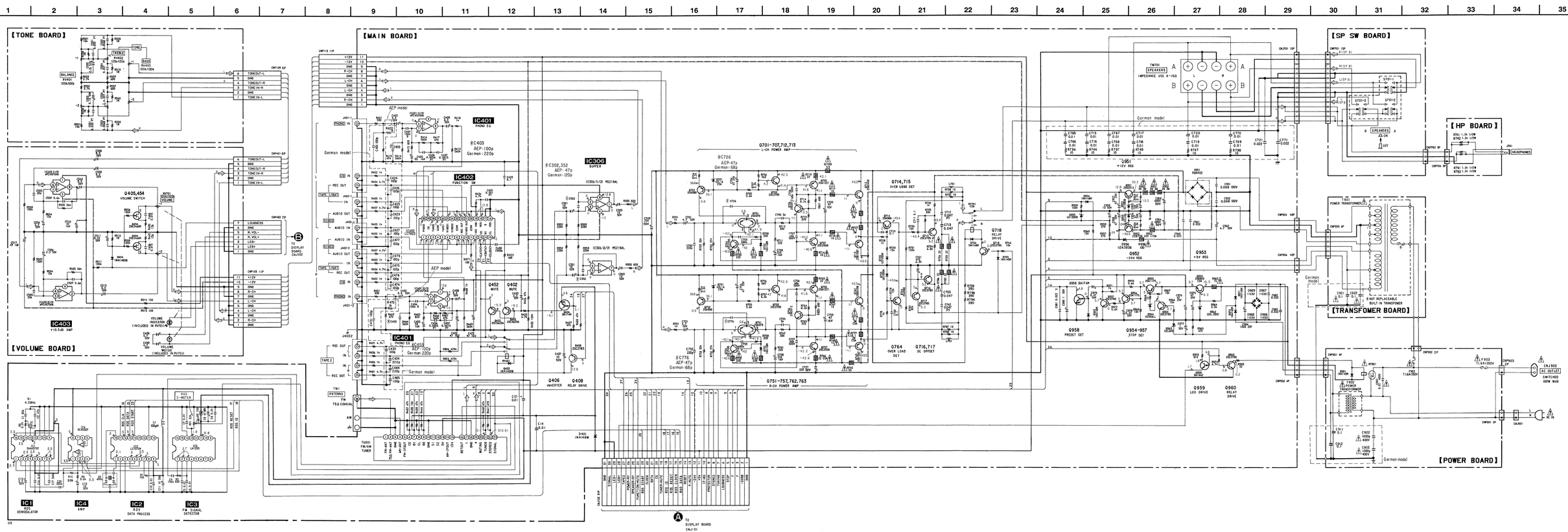

4-6. PRINTED WIRING BOARD — DISPLAY SECTION —

• See page 7 for Circuit Boards Location and see page 8 for Semiconductor Lead Layouts.

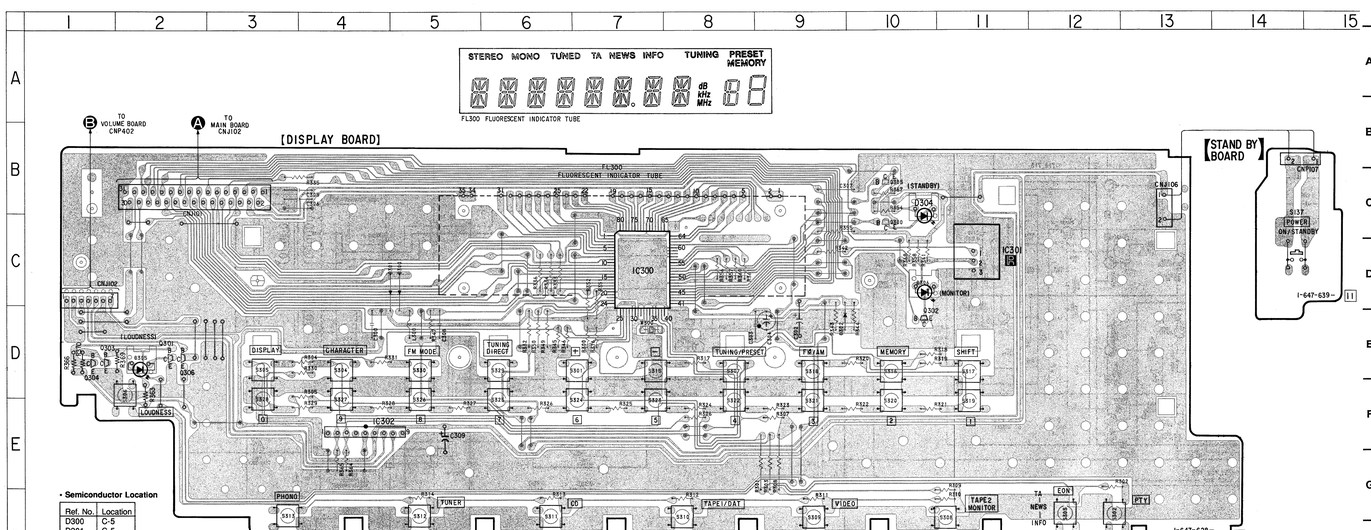

• Semiconductor Location

Ref. No.	Location
D300	C-5
D301	C-5
D302	D-9
D304	B-10
D305	D-2
D306	C-10
IC300	C-7
IC301	C-11
IC302	E-4
Q300	C-10
Q301	D-2
Q302	D-10
Q303	D-1
Q304	D-1
Q305	B-10
Q306	D-2

Note:
- ▨ : Pattern from the side which enable seen.

Note:
- All capacitors are in µF unless otherwise noted. pF:µµF
  50WV or less are not indicated except for electrolytics and tantaliums.
- All resistors are in Ω and 1/4W or less unless otherwise specified.
- % : indicates tolerance.
- ▭ : Panel designation.

- ▬▬ : B+ Line
- ▬▬ : B− Line
- Voltage and waveforms are dc with respect to ground under no-signal conditions.
  no mark : FM
- Voltages are taken with a VOM (Input impedance 10MΩ).
- Voltage variations may be noted due to normal production tolerances.

4-7. SCHEMATIC DIAGRAM — DISPLAY SECTION —

• See page 25, 26 for IC Block Diagrams.

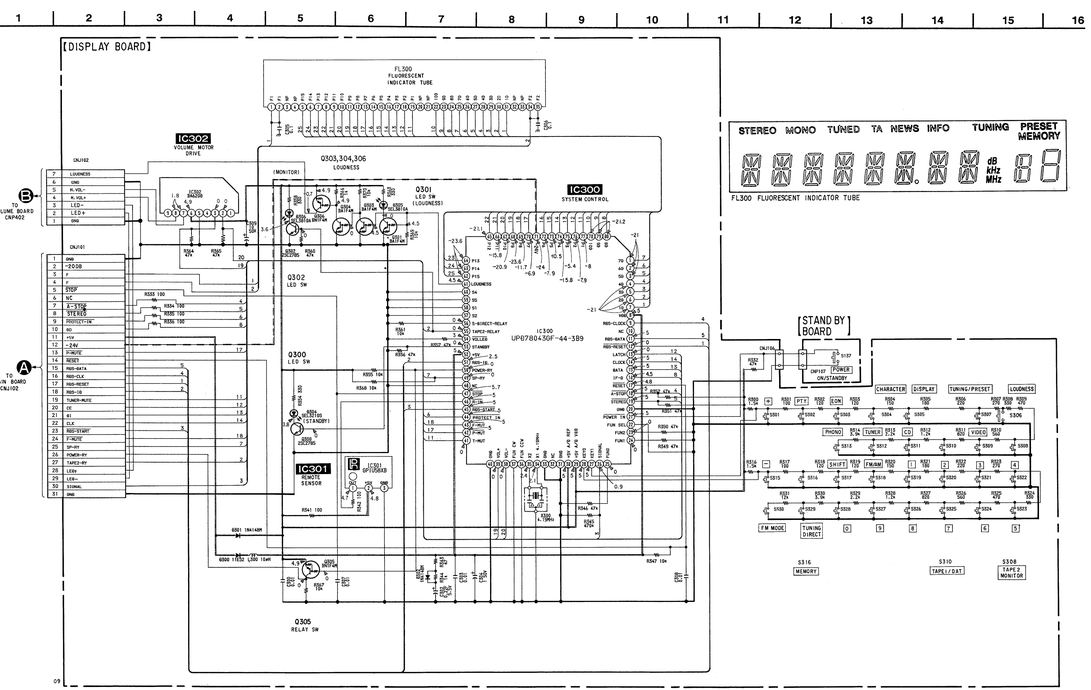

4-8. IC BLOCK DIAGRAMS

IC001 SAA6579

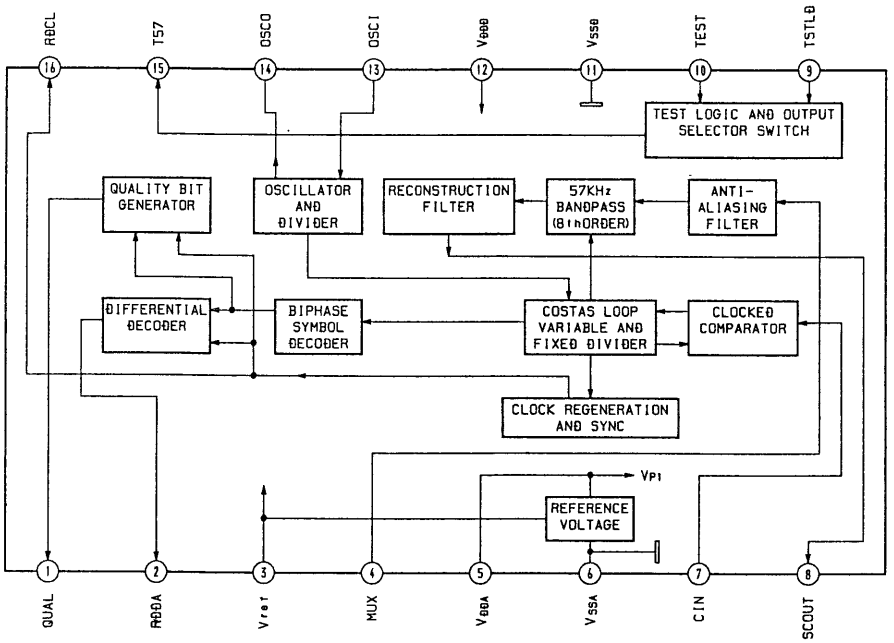

IC002 LC7073

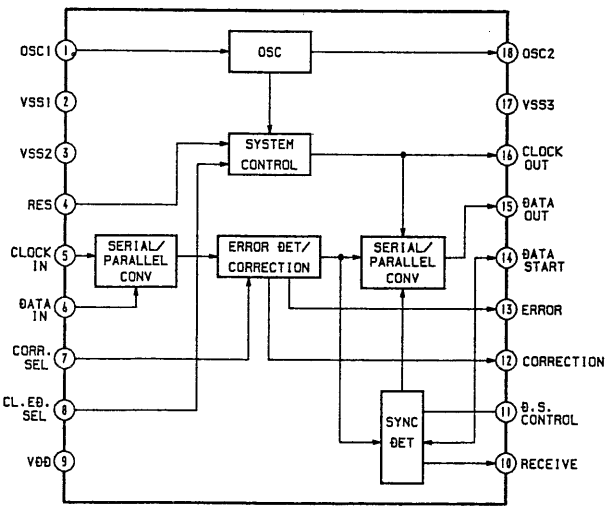

IC003 LA1235

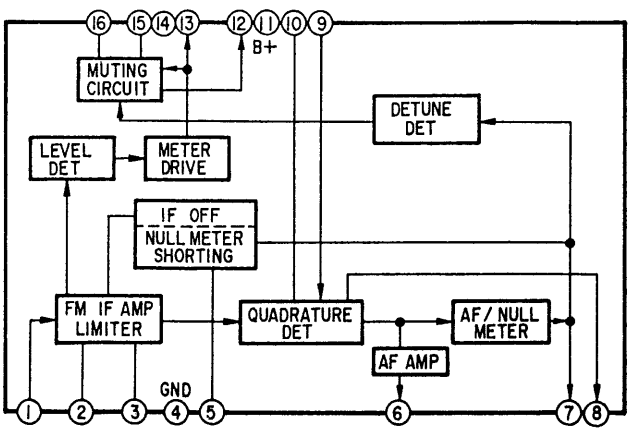

IC302 BA6208

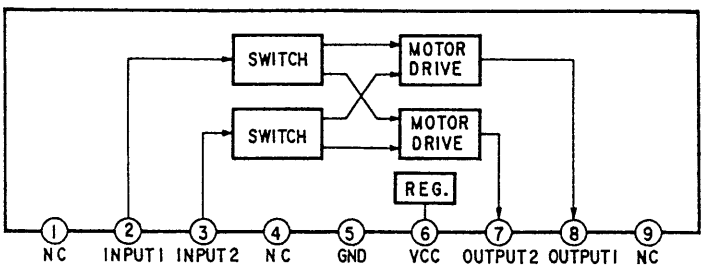

IC402 LC7822

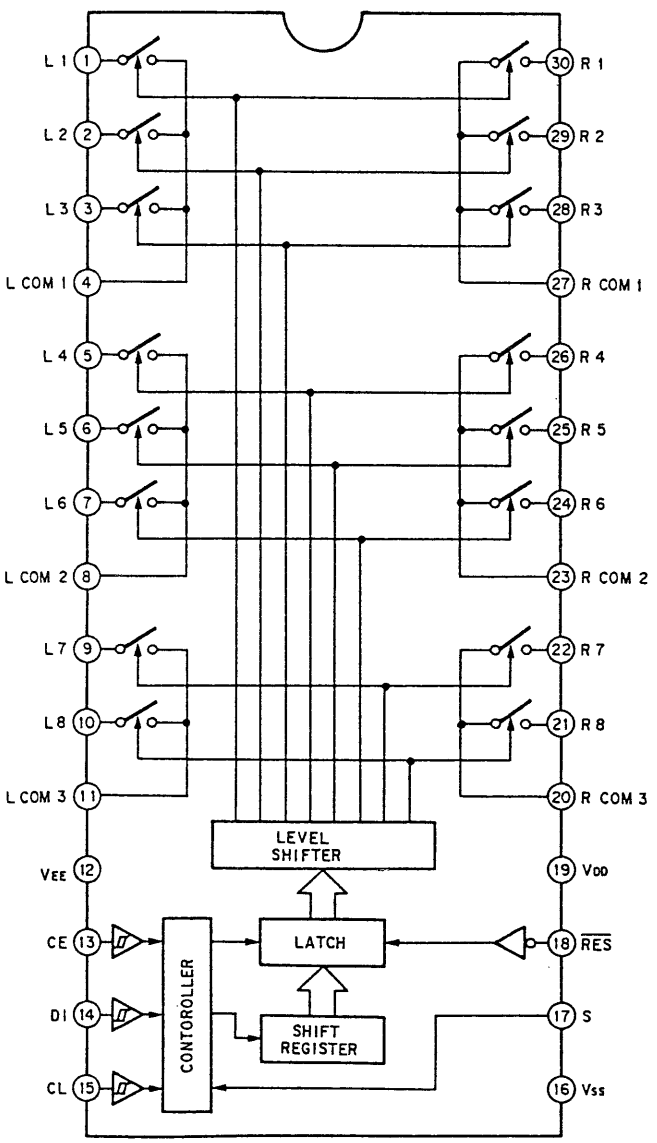

SECTION 5
EXPLODED VIEWS

NOTE:
- -XX, -X mean standardized parts, so they may have some difference from the original one.
- Items marked " * " are not stocked since they are seldom required for routine service. Some delay should be anticipated when ordering these items.
- The mechanical parts with no reference number in the exploded views are not supplied.
- Hardware (# mark) list is given in the last of this parts list.
- G : German model.

The components identified by mark ⚠ or dotted line with mark ⚠ are critical for safety.
Replace only with part number specified.

Note:
There are two type of AEP models which are depend on countries.
AE2 (AEP2) model: Model for Scandinavian countries. Switzerland, Spain and Portugal
AE1 (AEP1) model: Model for other European countries

5-1. FRONT PANEL SECTION

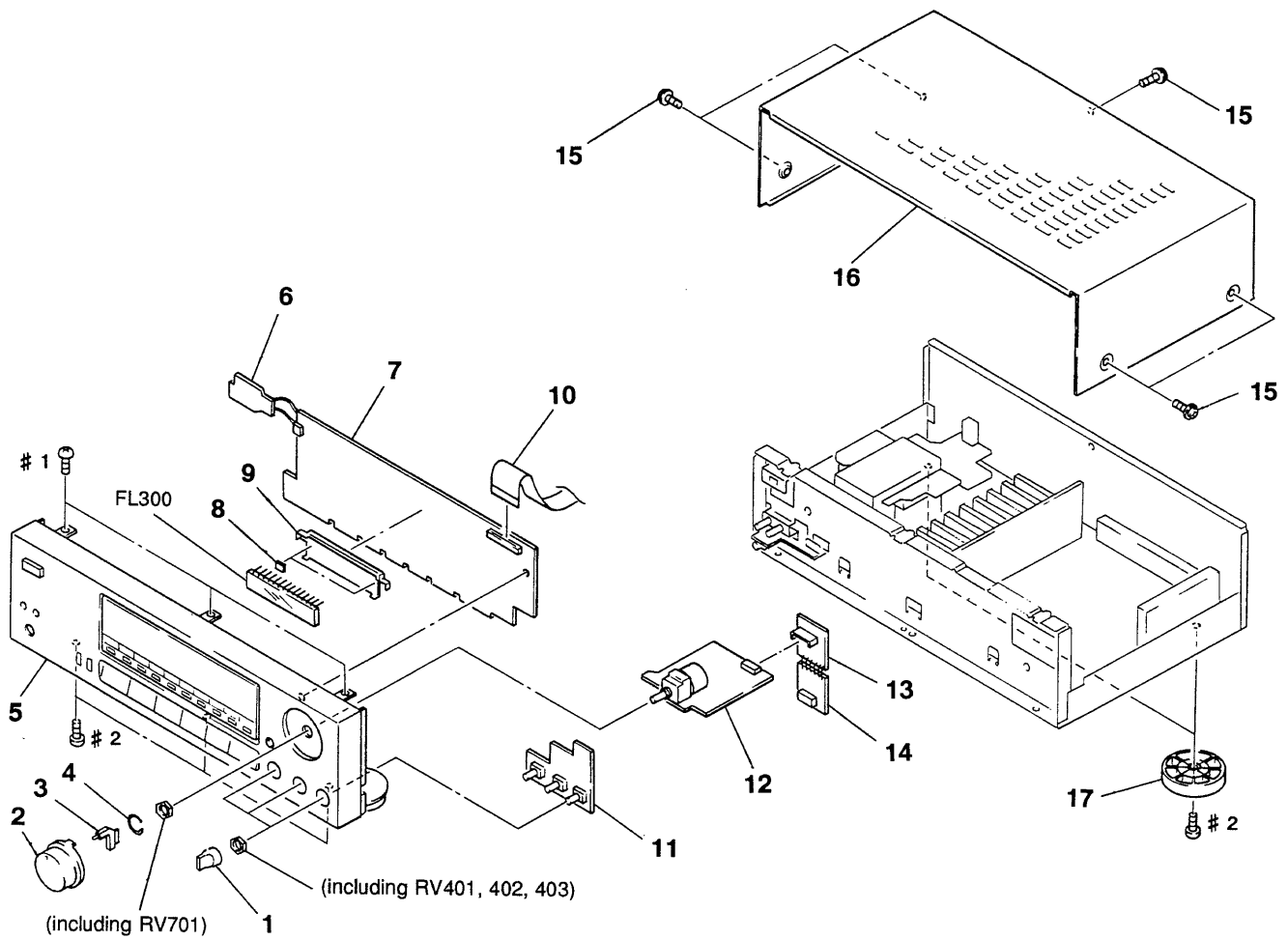

Ref. No.	Part No.	Description	Remark
1	4-957-383-01	KNOB (F14)	
2	4-949-659-01	KNOB (VOL-NEW)	
3	4-958-991-01	PLATE (VOL), LIGHT GUIDE	
4	3-350-426-01	SPRING, RING	
5	X-4943-601-1	PANEL ASSY, FRONT	
* 6	1-647-639-11	STAND BY BOARD	
* 7	A-4360-427-A	DISPLAY BOARD, COMPLETE	
* 8	4-921-941-01	CUSHION (FL)	
* 9	4-943-107-11	HOLDER (FL TUBE)	
10	1-696-456-11	WIRE (FLAT TYPE) (31 CORE)	
* 11	1-647-632-11	TONE BOARD	
* 12	A-4360-428-A	VOLUME BOARD, COMPLETE	
* 13	1-648-997-11	JOINT-1 BOARD	
* 14	1-648-998-11	JOINT-2 BOARD	
15	3-704-366-01	SCREW (CASE) (M3X8)	
* 16	4-951-795-01	CASE	
17	X-4941-292-1	FOOT ASSY (F58175S)	
FL300	1-517-141-11	INDICATOR TUBE, FLUORESCENT	

5-2. CHASSIS SECTION

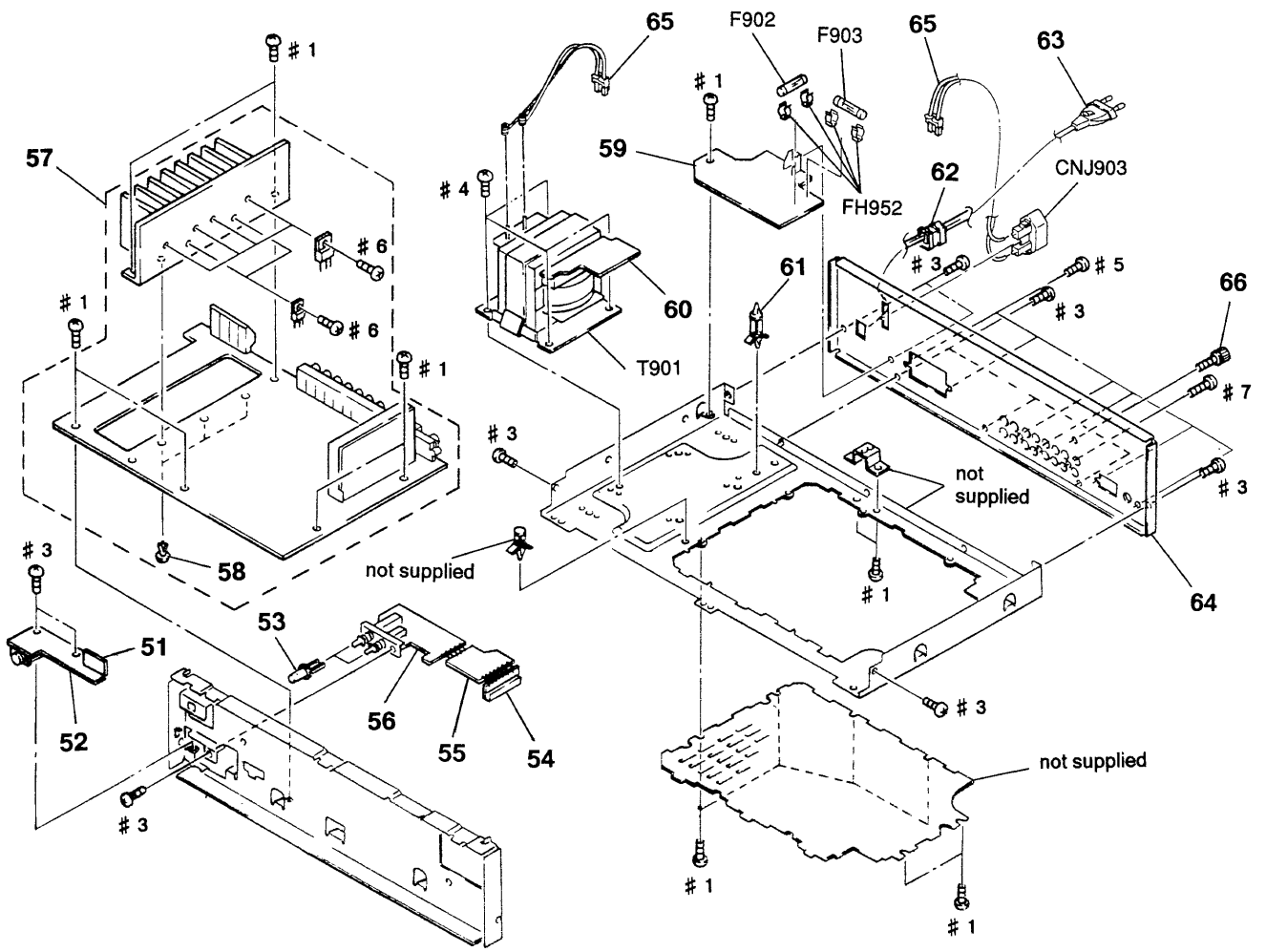

The components identified by mark ⚠ or dotted line with mark ⚠ are critical for safety.
Replace only with part number specified.

Ref. No.	Part No.	Description	Remark
* 51	1-647-636-11	HP-1 BOARD	
* 52	1-647-637-11	HP-2 BOARD	
53	4-951-801-02	BUTTON (S)	
* 54	1-647-633-11	SP SW-1 BOARD	
* 55	1-647-634-11	SP SW-2 BOARD	
* 56	1-647-635-11	SP SW-3 BOARD	
* 57	A-4360-426-A	MAIN BOARD, COMPLETE (AEP)	
* 57	A-4360-437-A	MAIN BOARD, COMPLETE (G)	
58	4-812-134-00	RIVET NYLON, 3.5	
* 59	1-647-638-11	POWER BOARD	
* 60	1-647-627-11	TRANSFORMER BOARD	
* 61	4-924-098-31	HOLDER, PC BOARD	

Ref. No.	Part No.	Description	Remark
* 62	3-703-244-00	BUSHING (2104), CORD	
⚠63	1-575-651-11	CORD, POWER	
* 64	4-957-709-01	PANEL, BACK (AEP1)	
* 64	4-957-709-11	PANEL, BACK (AEP2)	
* 64	4-957-709-21	PANEL, BACK (G)	
65	1-750-854-11	CORD (WITH CONNECTOR)	
66	4-947-010-01	SCREW, FEEDER FIXED	
⚠CNJ903	1-526-794-11	OUTLET, AC (AC OUTLET)	
⚠F902	1-532-259-00	FUSE (T1.6A 250V)	
⚠F903	1-532-259-00	FUSE (T1.6A 250V)	
* FH952	1-533-293-11	HOLDER, FUSE	
⚠T901	1-450-363-11	TRANSFORMER, POWER	

SECTION 6
ELECTRICAL PARTS LIST

DISPLAY

NOTE:

The components identified by mark ⚠ or dotted line with mark ⚠ are critical for safety.
Replace only with part number specified.

When indicating parts by reference number, please include the board name.

Note:
There are two type of AEP models which are depend on countries.
AE2 (AEP2) model: Model for Scandinavian countries. Switzerland, Spain and Portugal
AE1 (AEP1) model: Model for other European countries

- Due to standardization, replacements in the parts list may be different from the parts specified in the diagrams or the components used on the set.
- -XX, -X mean standardized parts, so they may have some difference from the original one.
- Items marked "*" are not stocked since they are seldom required for routine service. Some delay should be anticipated when ordering these items.

- RESISTORS
  All resistors are in ohms
  METAL: Metal-film resistor
  METAL OXIDE: Metal Oxide-film resistor
  F : nonflammable
- SEMICONDUCTORS
  In each case, u: μ , for example:
  uA...: μA..., uPA...: μPA..., uPB...: μPB..., uPC...: μPC..., uPD...: μPD...
- CAPACITORS
  uF : μF
- COILS
  uH : μH
- Hardware (# mark) list is given in the last of this parts list.
- G : German model.

Ref. No.	Part No.	Description			Remark
*	A-4360-427-A	DISPLAY BOARD, COMPLETE			
		**********			
*	4-921-941-01	CUSHION (FL)			
*	4-943-107-11	HOLDER (FL TUBE)			
		< CAPACITOR >			
C300	1-161-379-00	CERAMIC	0.01uF	20% 25V	
C302	1-125-486-11	DOUBLE LAYERS	0.22F	5.5V	
C303	1-161-379-00	CERAMIC	0.01uF	20% 25V	
C304	1-124-903-11	ELECT	1uF	20% 50V	
C305	1-164-159-11	CERAMIC	0.1uF	50V	
C306	1-164-159-11	CERAMIC	0.1uF	50V	
C307	1-161-379-00	CERAMIC	0.01uF	20% 25V	
C308	1-161-379-00	CERAMIC	0.01uF	20% 25V	
C309	1-124-907-11	ELECT	10uF	20% 50V	
		< CONNECTOR >			
* CNJ101	1-568-873-11	SOCKET, CONNECTOR 31P			
* CNJ102	1-566-969-11	HOUSING, CONNECTOR(PC BOARD) 7P			
* CNJ106	1-565-480-11	CONNECTOR, BOARD TO BOARD 4P			
		< DIODE >			
D300	8-719-200-82	DIODE	11ES2		
D301	8-719-987-63	DIODE	1N4148M		
D302	8-719-987-63	DIODE	1N4148M		
D304	8-719-313-69	DIODE	SEL3210S-CD		
D305	8-719-313-72	LED	SEL3810A-CD		
D306	8-719-313-72	LED	SEL3810A-CD		
		< FLUORESCENT INDICATOR >			
FL300	1-517-141-11	INDICATOR TUBE, FLUORESCENT			
		< IC >			
IC300	8-759-189-68	IC	uPD78043GF-044-3B9		
IC301	8-749-923-11	IC	GP1U58XB		
IC302	8-759-962-08	IC	BA6208		
		< COIL >			
L300	1-410-509-11	INDUCTOR	10uH		

Ref. No.	Part No.	Description			Remark
		< TRANSISTOR >			
Q300	8-729-119-78	TRANSISTOR	2SC2785-HFE		
Q301	8-729-900-36	TRANSISTOR	DTC124ES		
Q302	8-729-119-78	TRANSISTOR	2SC2785-HFE		
Q303	8-729-900-36	TRANSISTOR	DTC124ES		
Q304	8-729-900-36	TRANSISTOR	DTC124ES		
Q305	8-729-900-63	TRANSISTOR	DTA124ES		
Q306	8-729-900-63	TRANSISTOR	DTA124ES		
		< RESISTOR >			
R300	1-249-419-11	CARBON	1.5K	5% 1/4W F	
R301	1-249-405-11	CARBON	100	5% 1/4W F	
R302	1-249-406-11	CARBON	120	5% 1/4W F	
R303	1-249-406-11	CARBON	120	5% 1/4W F	
R304	1-249-407-11	CARBON	150	5% 1/4W F	
R305	1-249-408-11	CARBON	180	5% 1/4W F	
R306	1-249-409-11	CARBON	220	5% 1/4W F	
R307	1-249-410-11	CARBON	270	5% 1/4W F	
R308	1-249-411-11	CARBON	330	5% 1/4W	
R309	1-249-413-11	CARBON	470	5% 1/4W F	
R310	1-249-414-11	CARBON	560	5% 1/4W F	
R311	1-249-416-11	CARBON	820	5% 1/4W F	
R312	1-249-418-11	CARBON	1.2K	5% 1/4W F	
R313	1-249-421-11	CARBON	2.2K	5% 1/4W F	
R314	1-249-424-11	CARBON	3.9K	5% 1/4W F	
R316	1-249-419-11	CARBON	1.5K	5% 1/4W F	
R317	1-249-405-11	CARBON	100	5% 1/4W F	
R318	1-249-406-11	CARBON	120	5% 1/4W F	
R319	1-249-406-11	CARBON	120	5% 1/4W F	
R320	1-249-407-11	CARBON	150	5% 1/4W F	
R321	1-249-408-11	CARBON	180	5% 1/4W F	
R322	1-249-409-11	CARBON	220	5% 1/4W F	
R323	1-249-410-11	CARBON	270	5% 1/4W F	
R324	1-249-411-11	CARBON	330	5% 1/4W	
R325	1-249-413-11	CARBON	470	5% 1/4W F	
R326	1-249-414-11	CARBON	560	5% 1/4W F	
R327	1-249-416-11	CARBON	820	5% 1/4W F	
R328	1-249-418-11	CARBON	1.2K	5% 1/4W F	
R329	1-249-421-11	CARBON	2.2K	5% 1/4W F	
R330	1-249-424-11	CARBON	3.9K	5% 1/4W F	

DISPLAY | HP-1 | HP-2 | JOINT-1

Ref.No.	Part No.	Description				Remark
R331	1-249-430-11	CARBON	12K	5%	1/4W	
R332	1-249-437-11	CARBON	47K	5%	1/4W	
R333	1-249-405-11	CARBON	100	5%	1/4W	F
R334	1-249-405-11	CARBON	100	5%	1/4W	F
R335	1-249-405-11	CARBON	100	5%	1/4W	F
R336	1-249-405-11	CARBON	100	5%	1/4W	F
R341	1-249-405-11	CARBON	100	5%	1/4W	F
R342	1-249-405-11	CARBON	100	5%	1/4W	F
R343	1-249-401-11	CARBON	47	5%	1/4W	F
R344	1-249-417-11	CARBON	1K	5%	1/4W	F
R345	1-247-895-00	CARBON	470K	5%	1/4W	
R346	1-249-437-11	CARBON	47K	5%	1/4W	
R347	1-249-429-11	CARBON	10K	5%	1/4W	
R349	1-249-437-11	CARBON	47K	5%	1/4W	
R350	1-249-437-11	CARBON	47K	5%	1/4W	
R351	1-249-437-11	CARBON	47K	5%	1/4W	
R352	1-249-437-11	CARBON	47K	5%	1/4W	
R354	1-249-411-11	CARBON	330	5%	1/4W	
R355	1-249-429-11	CARBON	10K	5%	1/4W	
R356	1-249-437-11	CARBON	47K	5%	1/4W	
R357	1-249-437-11	CARBON	47K	5%	1/4W	
R358	1-249-411-11	CARBON	330	5%	1/4W	
R360	1-249-437-11	CARBON	47K	5%	1/4W	
R361	1-249-429-11	CARBON	10K	5%	1/4W	
R363	1-249-411-11	CARBON	330	5%	1/4W	
R364	1-249-437-11	CARBON	47K	5%	1/4W	
R365	1-249-437-11	CARBON	47K	5%	1/4W	
R366	1-249-417-11	CARBON	1K	5%	1/4W	F
R367	1-249-429-11	CARBON	10K	5%	1/4W	
R368	1-249-429-11	CARBON	10K	5%	1/4W	
R369	1-249-429-11	CARBON	10K	5%	1/4W	
R370	1-249-429-11	CARBON	10K	5%	1/4W	
		< SWITCH >				
S301	1-554-303-21	SWITCH, TACTILE (+)				
S302	1-554-303-21	SWITCH, TACTILE (PTY)				
S303	1-554-303-21	SWITCH, TACTILE (EON)				
S304	1-554-303-21	SWITCH, TACTILE (CHARACTER)				
S305	1-554-303-21	SWITCH, TACTILE (DISPLAY)				
S306	1-554-303-21	SWITCH, TACTILE (LOUDNESS)				
S307	1-554-303-21	SWITCH, TACTILE (TUNING/PRESET)				
S308	1-554-303-21	SWITCH, TACTILE (TAPE2/MONITOR)				
S309	1-554-303-21	SWITCH, TACTILE (VIDEO)				
S310	1-554-303-21	SWITCH, TACTILE (TAPE1/DAT)				
S311	1-554-303-21	SWITCH, TACTILE (CD)				
S312	1-554-303-21	SWITCH, TACTILE (TUNER)				
S313	1-554-303-21	SWITCH, TACTILE (PHONO)				
S315	1-554-303-21	SWITCH, TACTILE (-)				
S316	1-554-303-21	SWITCH, TACTILE (MEMORY)				
S317	1-554-303-21	SWITCH, TACTILE (SHIFT)				

Ref.No.	Part No.	Description				Remark
S318	1-554-303-21	SWITCH, TACTILE (FM/AM)				
S319	1-554-303-21	SWITCH, TACTILE (1)				
S320	1-554-303-21	SWITCH, TACTILE (2)				
S321	1-554-303-21	SWITCH, TACTILE (3)				
S322	1-554-303-21	SWITCH, TACTILE (4)				
S323	1-554-303-21	SWITCH, TACTILE (5)				
S324	1-554-303-21	SWITCH, TACTILE (6)				
S325	1-554-303-21	SWITCH, TACTILE (7)				
S326	1-554-303-21	SWITCH, TACTILE (8)				
S327	1-554-303-21	SWITCH, TACTILE (9)				
S328	1-554-303-21	SWITCH, TACTILE (0)				
S329	1-554-303-21	SWITCH, TACTILE (TUNING DIRECT)				
S330	1-554-303-21	SWITCH, TACTILE (FM MODE)				
		< VIBRATOR >				
X300	1-577-101-11	VIBRATOR, CERAMIC (4.19MHz)				
**********						
*	1-647-636-11	HP-1 BOARD				
		**********				
		< CONNECTOR >				
CNP704	1-691-160-11	PIN, CONNECTOR 3P				
**********						
*	1-647-637-11	HP-2 BOARD				
		**********				
		< JACK >				
J701	1-568-151-11	JACK (LARGE TYPE) (HEADPHONE)				
		< RESISTOR >				
R741	1-247-753-11	CARBON	1.2K	5%	1/2W	
R742	1-247-753-11	CARBON	1.2K	5%	1/2W	
R791	1-247-753-11	CARBON	1.2K	5%	1/2W	
R792	1-247-753-11	CARBON	1.2K	5%	1/2W	
**********						
*	1-648-997-11	JOINT-1 BOARD				
		**********				
		< CONNECTOR >				
* CNP404	1-750-384-11	CONNECTOR, BOARD TO BOARD 11P				
**********						

Ref.No.	Part No.	Description			Remark
*	1-648-998-11	JOINT-2 BOARD			
		**********			
		< CONNECTOR >			
* CNJ402	1-750-383-11	CONNECTOR, BOARD TO BOARD 11P			
**********					
*	A-4360-426-A	MAIN BOARD, COMPLETE (AEP)			
		**********			
*	A-4360-437-A	MAIN BOARD, COMPLETE (G)			
		**********			
	4-812-134-00	RIVET NYLON, 3.5			
*	4-942-204-01	PLATE, GROUND			
*	4-953-350-01	PLATE, GROUND			
	7-685-647-79	SCREW +BVTP 3X10 TYPE2 IT-3			
	7-682-548-04	SCREW +BVTT 3X8 (S)			
		< CAPACITOR >			
C1	1-162-280-31	CERAMIC	82PF	10%	50V
C2	1-162-215-31	CERAMIC	47PF	5%	50V
C4	1-162-282-31	CERAMIC	100PF	10%	50V
C5	1-161-379-00	CERAMIC	0.01uF	20%	25V
C6	1-161-379-00	CERAMIC	0.01uF	20%	25V
C7	1-161-379-00	CERAMIC	0.01uF	20%	25V
C8	1-124-910-11	ELECT	47uF	20%	50V
C9	1-161-379-00	CERAMIC	0.01uF	20%	25V
C10	1-161-379-00	CERAMIC	0.01uF	20%	25V
C11	1-124-907-11	ELECT	10uF	20%	50V
C12	1-161-379-00	CERAMIC	0.01uF	20%	25V
C14	1-161-379-00	CERAMIC	0.01uF	20%	25V
C15	1-124-925-11	ELECT	2.2uF	20%	100V
C16	1-161-379-00	CERAMIC	0.01uF	20%	25V
C17	1-162-291-31	CERAMIC	560PF	10%	50V
C19	1-124-907-11	ELECT	10uF	20%	50V
C20	1-162-288-31	CERAMIC	330PF	10%	50V
C301	1-124-907-11	ELECT	10uF	20%	50V
C302	1-162-215-31	CERAMIC	47PF	5%	50V (AEP)
C302	1-162-283-31	CERAMIC	120PF	10%	50V (G)
C303	1-124-907-11	ELECT	10uF	20%	50V
C351	1-124-907-11	ELECT	10uF	20%	50V
C352	1-162-215-31	CERAMIC	47PF	5%	50V (AEP)
C352	1-162-283-31	CERAMIC	120PF	10%	50V (G)
C353	1-124-907-11	ELECT	10uF	20%	50V
C401	1-162-282-31	CERAMIC	100PF	10%	50V (G)
C402	1-123-382-00	ELECT	3.3uF	20%	100V
C403	1-162-282-31	CERAMIC	100PF	10%	50V (AEP)
C403	1-162-286-31	CERAMIC	220PF	10%	50V (G)
C404	1-162-282-31	CERAMIC	100PF	10%	50V
C405	1-124-034-51	ELECT	33uF	20%	16V
C406	1-137-437-11	FILM	0.0056uF	5%	50V
C407	1-137-365-11	FILM	0.0015uF	5%	50V
C408	1-123-382-00	ELECT	3.3uF	20%	100V
C420	1-164-159-11	CERAMIC	0.1uF		50V
C422	1-124-477-11	ELECT	47uF	20%	25V
C423	1-124-477-11	ELECT	47uF	20%	25V
C424	1-162-282-31	CERAMIC	100PF	10%	50V (G)
C425	1-162-282-31	CERAMIC	100PF	10%	50V (G)
C426	1-162-282-31	CERAMIC	100PF	10%	50V (G)
C427	1-162-282-31	CERAMIC	100PF	10%	50V (G)
C429	1-162-282-31	CERAMIC	100PF	10%	50V (G)
C430	1-162-294-31	CERAMIC	0.001uF	10%	50V
C431	1-137-364-91	FILM	0.001uF	5%	50V
C433	1-124-925-11	ELECT	2.2uF	20%	100V
C434	1-162-286-31	CERAMIC	220PF	10%	50V (G)
C435	1-162-282-31	CERAMIC	100PF	10%	50V (G)
C437	1-124-907-11	ELECT	10uF	20%	50V
C451	1-162-282-31	CERAMIC	100PF	10%	50V (G)
C452	1-123-382-00	ELECT	3.3uF	20%	100V
C453	1-162-282-31	CERAMIC	100PF	10%	50V (AEP)
C453	1-162-286-31	CERAMIC	220PF	10%	50V (G)
C454	1-162-282-31	CERAMIC	100PF	10%	50V
C455	1-124-034-51	ELECT	33uF	20%	16V
C456	1-137-437-11	FILM	0.0056uF	5%	50V
C457	1-137-365-11	FILM	0.0015uF	5%	50V
C458	1-123-382-00	ELECT	3.3uF	20%	100V
C474	1-162-282-31	CERAMIC	100PF	10%	50V (G)
C475	1-162-282-31	CERAMIC	100PF	10%	50V (G)
C476	1-162-282-31	CERAMIC	100PF	10%	50V (G)
C477	1-162-282-31	CERAMIC	100PF	10%	50V (G)
C479	1-162-282-31	CERAMIC	100PF	10%	50V (G)
C484	1-162-286-31	CERAMIC	220PF	10%	50V (G)
C485	1-162-282-31	CERAMIC	100PF	10%	50V (G)
C701	1-124-927-11	ELECT	4.7uF	20%	100V
C702	1-162-286-31	CERAMIC	220PF	10%	50V
C703	1-102-116-00	CERAMIC	680PF	10%	50V
C704	1-124-477-11	ELECT	47uF	20%	25V
C705	1-164-039-11	CERAMIC	3PF	0.25PF	50V
C706	1-102-989-00	CERAMIC	68PF	5%	500V
C707	1-102-989-00	CERAMIC	68PF	5%	500V
C708	1-124-120-11	ELECT	220uF	20%	25V
C709	1-124-477-11	ELECT	47uF	20%	25V
C710	1-164-159-11	CERAMIC	0.1uF		50V
C711	1-164-159-11	CERAMIC	0.1uF		50V
C712	1-136-161-00	FILM	0.047uF	5%	50V
C713	1-136-161-00	FILM	0.047uF	5%	50V
C715	1-164-096-11	CERAMIC	0.01uF		50V (G)
C716	1-164-096-11	CERAMIC	0.01uF		50V (G)
C717	1-164-096-11	CERAMIC	0.01uF		50V (G)
C718	1-164-096-11	CERAMIC	0.01uF		50V (G)

MAIN

Ref.No.	Part No.	Description			Remark
C719	1-164-096-11	CERAMIC	0.01uF	50V	(G)
C720	1-164-096-11	CERAMIC	0.01uF	50V	(G)
C721	1-161-494-00	CERAMIC	0.022uF	25V	(G)
C726	1-162-215-31	CERAMIC	47PF 5%	50V	(AEP)
C726	1-162-219-31	CERAMIC	68PF 5%	50V	(G)
C727	1-124-911-11	ELECT	220uF 20%	50V	
C749	1-124-911-11	ELECT	220uF 20%	50V	
C751	1-124-927-11	ELECT	4.7uF 20%	100V	
C752	1-162-286-31	CERAMIC	220PF 10%	50V	
C753	1-102-116-00	CERAMIC	680PF 10%	50V	
C754	1-124-477-11	ELECT	47uF 20%	25V	
C755	1-164-039-11	CERAMIC	3PF 0.25PF	50V	
C756	1-102-989-00	CERAMIC	68PF 5%	500V	
C757	1-102-989-00	CERAMIC	68PF 5%	500V	
C758	1-124-120-11	ELECT	220uF 20%	25V	
C759	1-124-477-11	ELECT	47uF 20%	25V	
C760	1-164-159-11	CERAMIC	0.1uF	50V	
C761	1-124-472-11	ELECT	470uF 20%	10V	
C762	1-136-161-00	FILM	0.047uF 5%	50V	
C763	1-136-161-00	FILM	0.047uF 5%	50V	
C765	1-164-096-11	CERAMIC	0.01uF	50V	(G)
C766	1-164-096-11	CERAMIC	0.01uF	50V	(G)
C767	1-164-096-11	CERAMIC	0.01uF	50V	(G)
C768	1-164-096-11	CERAMIC	0.01uF	50V	(G)
C769	1-164-096-11	CERAMIC	0.01uF	50V	(G)
C770	1-164-096-11	CERAMIC	0.01uF	50V	(G)
C771	1-161-494-00	CERAMIC	0.022uF	25V	(G)
C776	1-162-215-31	CERAMIC	47PF 5%	50V	(AEP)
C776	1-162-219-31	CERAMIC	68PF 5%	50V	(G)
C951	1-108-702-11	MYLAR	0.068uF 10%	100V	
C952	1-108-702-11	MYLAR	0.068uF 10%	100V	
C953	1-125-614-11	ELECT	6800uF 20%	50V	
C953	1-128-506-11	ELECT	6800uF 20%	50V	
C954	1-125-614-11	ELECT	6800uF 20%	50V	
C954	1-128-506-11	ELECT	6800uF 20%	50V	
C955	1-124-478-11	ELECT	100uF 20%	25V	
C956	1-124-910-11	ELECT	47uF 20%	50V	
C957	1-124-477-11	ELECT	47uF 20%	25V	
C958	1-124-910-11	ELECT	47uF 20%	50V	
C959	1-124-907-11	ELECT	10uF 20%	50V	
C960	1-161-494-00	CERAMIC	0.022uF	25V	
C961	1-161-494-00	CERAMIC	0.022uF	25V	
C962	1-124-927-11	ELECT	4.7uF 20%	100V	
C975	1-124-477-11	ELECT	47uF 20%	25V	
C976	1-124-477-11	ELECT	47uF 20%	25V	
C977	1-124-903-11	ELECT	1uF 20%	50V	
C978	1-124-464-11	ELECT	0.22uF 20%	50V	
C979	1-124-902-00	ELECT	0.47uF 20%	50V	
C980	1-124-903-11	ELECT	1uF 20%	50V	
C981	1-161-494-00	CERAMIC	0.022uF	25V	
C982	1-161-494-00	CERAMIC	0.022uF	25V	
C983	1-161-494-00	CERAMIC	0.022uF	25V	
C984	1-124-557-11	ELECT	1000uF 20%	25V	

< CONNECTOR >

* CNJ102	1-568-845-11	SOCKET, CONNECTOR 31P	
CNJ701	1-573-095-11	SOCKET, CONNECTOR 15P	
* CNP113	1-750-384-11	CONNECTOR, BOARD TO BOARD 11P	
* CNP952	1-564-507-11	PLUG, CONNECTOR 4P	
* CNP954	1-564-104-00	PIN, CONNECTOR (B3P-VH) 3P	
* CNP956	1-564-506-11	PLUG, CONNECTOR 3P	

< DIODE >

D401	8-719-987-63	DIODE	1N4148M
D403	8-719-987-63	DIODE	1N4148M
D701	8-719-933-41	DIODE	HZS6C3L
D702	8-719-987-63	DIODE	1N4148M
D703	8-719-815-85	DIODE	1S1585
D704	8-719-987-63	DIODE	1N4148M
D705	8-719-987-63	DIODE	1N4148M
D751	8-719-933-41	DIODE	HZS6C3L
D752	8-719-987-63	DIODE	1N4148M
D753	8-719-815-85	DIODE	1S1585
D951	8-719-312-09	DIODE	RBA-402
D952	8-719-010-78	DIODE	UZ-13BSB
D953	8-719-002-33	DIODE	UZL-24L
D954	8-719-987-63	DIODE	1N4148M
D955	8-719-010-74	DIODE	UZ-12BSB
D956	8-719-010-29	DIODE	UZ-4.3BSB
D962	8-719-010-47	DIODE	UZ-6.2BSC
D963	8-719-933-41	DIODE	HZS6C3L
D964	8-719-985-53	DIODE	HZS4ALL
D965	8-719-987-63	DIODE	1N4148M
D966	8-719-200-82	DIODE	11ES2
D967	8-719-200-82	DIODE	11ES2
D968	8-719-200-82	DIODE	11ES2
D969	8-719-200-82	DIODE	11ES2
D970	8-719-987-63	DIODE	1N4148M
D971	8-719-987-63	DIODE	1N4148M

< IC >

IC1	8-759-169-99	IC	SAA6579
IC2	8-759-062-26	IC	LC7073
IC3	8-759-812-35	IC	LA1235
IC4	8-759-145-58	IC	uPC4558C
IC306	8-759-634-50	IC	M5218AL
IC401	8-759-112-93	IC	uPC4570HA-1
IC402	8-759-805-14	IC	LC7822

MAIN

Ref.No.	Part No.	Description	Remark
		< JACK >	
J401	1-580-825-11	JACK, PIN 6P (PHONO/CD/TAPE1/DAT)	
J402	1-573-028-21	JACK, PIN 4P (VIDEO/TAPE1/DAT)	
J403	1-691-887-11	JACK, PIN 6P (VIDEO/TAPE2)	
		< COIL >	
L1	1-410-521-11	INDUCTOR 100uH	
L701	1-420-872-00	COIL, AIR CORE	
L751	1-420-872-00	COIL, AIR CORE	
		< TRANSISTOR >	
Q402	8-729-141-30	TRANSISTOR 2SC3623A-LK	
Q406	8-729-900-63	TRANSISTOR DTA124ES	
Q408	8-729-119-78	TRANSISTOR 2SC2785-HFE	
Q452	8-729-141-30	TRANSISTOR 2SC3623A-LK	
Q701	8-729-620-18	TRANSISTOR 2SA979-FG	
Q702	8-729-140-82	TRANSISTOR 2SA988-PAFAEA	
Q703	8-729-119-78	TRANSISTOR 2SC2785-HFE	
Q704	8-729-119-78	TRANSISTOR 2SC2785-HFE	
Q705	8-729-122-13	TRANSISTOR 2SA1221-K	
Q706	8-729-209-15	TRANSISTOR 2SD2012	
Q707	8-729-195-82	TRANSISTOR 2SC2958	
Q712	8-729-020-72	TRANSISTOR 2SD2438-OPY	
Q713	8-729-020-41	TRANSISTOR 2SB1587-OPY	
Q714	8-729-140-82	TRANSISTOR 2SA988-PAFAEA	
Q715	8-729-119-78	TRANSISTOR 2SC2785-HFE	
Q716	8-729-119-78	TRANSISTOR 2SC2785-HFE	
Q717	8-729-119-78	TRANSISTOR 2SC2785-HFE	
Q718	8-729-119-78	TRANSISTOR 2SC2785-HFE	
Q751	8-729-620-18	TRANSISTOR 2SA979-FG	
Q752	8-729-140-82	TRANSISTOR 2SA988-PAFAEA	
Q753	8-729-119-78	TRANSISTOR 2SC2785-HFE	
Q754	8-729-119-78	TRANSISTOR 2SC2785-HFE	
Q755	8-729-122-13	TRANSISTOR 2SA1221-K	
Q756	8-729-209-15	TRANSISTOR 2SD2012	
Q757	8-729-195-82	TRANSISTOR 2SC2958	
Q762	8-729-020-72	TRANSISTOR 2SD2438-OPY	
Q763	8-729-020-41	TRANSISTOR 2SB1587-OPY	
Q764	8-729-140-82	TRANSISTOR 2SA988-PAFAEA	
Q951	8-729-209-15	TRANSISTOR 2SD2012	
Q952	8-729-140-97	TRANSISTOR KSA708	
Q953	8-729-180-92	TRANSISTOR 2SD809-K	
Q954	8-729-119-78	TRANSISTOR 2SC2785-HFE	
Q955	8-729-119-76	TRANSISTOR 2SA1175-HFE	
Q956	8-729-119-76	TRANSISTOR 2SA1175-HFE	
Q957	8-729-119-78	TRANSISTOR 2SC2785-HFE	
Q958	8-729-900-36	TRANSISTOR DTC124ES	
Q959	8-729-904-39	TRANSISTOR DTC114TS	
Q960	8-729-119-78	TRANSISTOR 2SC2785-HFE	

Ref.No.	Part No.	Description				Remark
		< RESISTOR >				
R1	1-249-405-11	CARBON	100	5%	1/4W	F
R2	1-249-411-11	CARBON	330	5%	1/4W	
⚠R3	1-249-405-11	CARBON	100	5%	1/4W	F
R5	1-249-421-11	CARBON	2.2K	5%	1/4W	F
R8	1-249-426-11	CARBON	5.6K	5%	1/4W	
R10	1-247-862-11	CARBON	20K	5%	1/4W	
R302	1-247-887-00	CARBON	220K	5%	1/4W	
R303	1-247-887-00	CARBON	220K	5%	1/4W	
R305	1-249-416-11	CARBON	820	5%	1/4W	F
R352	1-247-887-00	CARBON	220K	5%	1/4W	
R353	1-247-887-00	CARBON	220K	5%	1/4W	
R355	1-249-416-11	CARBON	820	5%	1/4W	F
R401	1-249-411-11	CARBON	330	5%	1/4W	
R402	1-249-417-11	CARBON	1K	5%	1/4W	F
R403	1-249-417-11	CARBON	1K	5%	1/4W	F
R404	1-249-425-11	CARBON	4.7K	5%	1/4W	F
R405	1-249-417-11	CARBON	1K	5%	1/4W	F
R407	1-249-425-11	CARBON	4.7K	5%	1/4W	F
R413	1-249-437-11	CARBON	47K	5%	1/4W	
R414	1-247-897-11	CARBON	560K	5%	1/4W	
R415	1-249-416-11	CARBON	820	5%	1/4W	F
R416	1-247-897-11	CARBON	560K	5%	1/4W	
R417	1-249-437-11	CARBON	47K	5%	1/4W	
R418	1-249-417-11	CARBON	1K	5%	1/4W	F
R419	1-247-897-11	CARBON	560K	5%	1/4W	
R420	1-249-417-11	CARBON	1K	5%	1/4W	F (G)
R421	1-249-408-11	CARBON	180	5%	1/4W	F
R425	1-249-425-11	CARBON	4.7K	5%	1/4W	F
R426	1-249-437-11	CARBON	47K	5%	1/4W	
R427	1-249-437-11	CARBON	47K	5%	1/4W	
R430	1-249-437-11	CARBON	47K	5%	1/4W	
R431	1-249-425-11	CARBON	4.7K	5%	1/4W	F
R432	1-247-883-00	CARBON	150K	5%	1/4W	
R434	1-249-425-11	CARBON	4.7K	5%	1/4W	F
R436	1-249-417-11	CARBON	1K	5%	1/4W	F
R437	1-249-437-11	CARBON	47K	5%	1/4W	
R438	1-249-429-11	CARBON	10K	5%	1/4W	
R439	1-249-437-11	CARBON	47K	5%	1/4W	
R440	1-249-437-11	CARBON	47K	5%	1/4W	
R441	1-249-413-11	CARBON	470	5%	1/4W	F
R444	1-249-437-11	CARBON	47K	5%	1/4W	
R451	1-249-411-11	CARBON	330	5%	1/4W	
R452	1-249-417-11	CARBON	1K	5%	1/4W	F
R453	1-249-417-11	CARBON	1K	5%	1/4W	F
R454	1-249-425-11	CARBON	4.7K	5%	1/4W	F
R455	1-249-417-11	CARBON	1K	5%	1/4W	F
R457	1-249-425-11	CARBON	4.7K	5%	1/4W	F
R463	1-249-437-11	CARBON	47K	5%	1/4W	
R464	1-247-897-11	CARBON	560K	5%	1/4W	

The components identified by mark ⚠ or dotted line with mark ⚠ are critical for safety.
Replace only with part number specified.

MAIN

Ref.No.	Part No.	Description					Remark
R465	1-249-416-11	CARBON	820	5%	1/4W	F	
R466	1-247-897-11	CARBON	560K	5%	1/4W		
R467	1-249-437-11	CARBON	47K	5%	1/4W		
R468	1-249-417-11	CARBON	1K	5%	1/4W	F	
R469	1-247-897-11	CARBON	560K	5%	1/4W		
R470	1-249-417-11	CARBON	1K	5%	1/4W	F	(G)
R471	1-249-408-11	CARBON	180	5%	1/4W	F	
R481	1-249-425-11	CARBON	4.7K	5%	1/4W	F	
R486	1-249-417-11	CARBON	1K	5%	1/4W	F	
R701	1-249-417-11	CARBON	1K	5%	1/4W	F	
R702	1-249-434-11	CARBON	27K	5%	1/4W		
R703	1-249-435-11	CARBON	33K	5%	1/4W		
R704	1-249-421-11	CARBON	2.2K	5%	1/4W	F	
R705	1-249-426-11	CARBON	5.6K	5%	1/4W		
R706	1-249-414-11	CARBON	560	5%	1/4W	F	
R707	1-249-423-11	CARBON	3.3K	5%	1/4W	F	
R708	1-249-411-11	CARBON	330	5%	1/4W		
⚠R709	1-249-409-11	CARBON	220	5%	1/4W	F	
⚠R710	1-249-409-11	CARBON	220	5%	1/4W	F	
R711	1-249-409-11	CARBON	220	5%	1/4W	F	
R712	1-249-435-11	CARBON	33K	5%	1/4W		
⚠R713	1-249-397-11	CARBON	22	5%	1/4W	F	
R714	1-249-428-11	CARBON	8.2K	5%	1/4W	F	
R715	1-249-409-11	CARBON	220	5%	1/4W	F	
⚠R716	1-249-397-11	CARBON	22	5%	1/4W	F	
⚠R717	1-249-393-11	CARBON	10	5%	1/4W	F	
⚠R718	1-249-393-11	CARBON	10	5%	1/4W	F	
⚠R726	1-208-601-21	WIREWOUND	0.1	10%	2W	F	
⚠R727	1-208-601-21	WIREWOUND	0.1	10%	2W	F	
R728	1-249-417-11	CARBON	1K	5%	1/4W	F	
R729	1-249-431-11	CARBON	15K	5%	1/4W		
R730	1-249-429-11	CARBON	10K	5%	1/4W		
R731	1-249-441-11	CARBON	100K	5%	1/4W		
R732	1-249-417-11	CARBON	1K	5%	1/4W	F	
R733	1-249-435-11	CARBON	33K	5%	1/4W		
R734	1-249-427-11	CARBON	6.8K	5%	1/4W	F	
⚠R735	1-249-397-11	CARBON	22	5%	1/4W	F	
⚠R736	1-249-397-11	CARBON	22	5%	1/4W	F	
R737	1-249-393-11	CARBON	10	5%	1/4W	F	
R738	1-249-393-11	CARBON	10	5%	1/4W	F	
R739	1-249-412-11	CARBON	390	5%	1/4W	F	
R744	1-249-429-11	CARBON	10K	5%	1/4W		
⚠R745	1-249-399-11	CARBON	33	5%	1/4W	F	
R746	1-249-393-11	CARBON	10	5%	1/4W	F	(G)
R747	1-249-393-11	CARBON	10	5%	1/4W	F	(G)
R748	1-249-393-11	CARBON	10	5%	1/4W	F	(G)
⚠R749	1-249-399-11	CARBON	33	5%	1/4W	F	
R751	1-249-417-11	CARBON	1K	5%	1/4W	F	
R752	1-249-434-11	CARBON	27K	5%	1/4W		
R753	1-249-435-11	CARBON	33K	5%	1/4W		
R754	1-249-421-11	CARBON	2.2K	5%	1/4W	F	
R755	1-249-426-11	CARBON	5.6K	5%	1/4W		
R756	1-249-414-11	CARBON	560	5%	1/4W	F	
R757	1-249-423-11	CARBON	3.3K	5%	1/4W	F	
R758	1-249-411-11	CARBON	330	5%	1/4W		
⚠R759	1-249-409-11	CARBON	220	5%	1/4W	F	
⚠R760	1-249-409-11	CARBON	220	5%	1/4W	F	
R761	1-249-409-11	CARBON	220	5%	1/4W	F	
R762	1-249-435-11	CARBON	33K	5%	1/4W		
⚠R763	1-249-397-11	CARBON	22	5%	1/4W	F	
R764	1-249-428-11	CARBON	8.2K	5%	1/4W	F	
R765	1-249-409-11	CARBON	220	5%	1/4W	F	
⚠R766	1-249-397-11	CARBON	22	5%	1/4W	F	
⚠R767	1-249-393-11	CARBON	10	5%	1/4W	F	
⚠R768	1-249-393-11	CARBON	10	5%	1/4W	F	
⚠R776	1-208-601-21	WIREWOUND	0.1	10%	2W	F	
⚠R777	1-208-601-21	WIREWOUND	0.1	10%	2W	F	
R778	1-249-417-11	CARBON	1K	5%	1/4W	F	
R779	1-249-431-11	CARBON	15K	5%	1/4W		
R781	1-249-440-11	CARBON	82K	5%	1/4W		
⚠R785	1-249-397-11	CARBON	22	5%	1/4W	F	
⚠R786	1-249-397-11	CARBON	22	5%	1/4W	F	
R787	1-249-393-11	CARBON	10	5%	1/4W	F	
R788	1-249-393-11	CARBON	10	5%	1/4W	F	
R794	1-249-412-11	CARBON	390	5%	1/4W	F	
R796	1-249-393-11	CARBON	10	5%	1/4W	F	(G)
R797	1-249-393-11	CARBON	10	5%	1/4W	F	(G)
R798	1-249-393-11	CARBON	10	5%	1/4W	F	(G)
R799	1-249-412-11	CARBON	390	5%	1/4W	F	
R801	1-249-415-11	CARBON	680	5%	1/4W	F	
R804	1-247-895-00	CARBON	470K	5%	1/4W		
R851	1-249-415-11	CARBON	680	5%	1/4W	F	
R854	1-247-895-00	CARBON	470K	5%	1/4W		
⚠R950	1-215-908-00	METAL OXIDE	33	5%	3W	F	
⚠R951	1-215-908-00	METAL OXIDE	33	5%	3W	F	
⚠R952	1-247-743-11	CARBON	220	5%	1/2W	F	
R953	1-249-422-11	CARBON	2.7K	5%	1/4W	F	
R954	1-249-423-11	CARBON	3.3K	5%	1/4W	F	
⚠R955	1-215-908-00	METAL OXIDE	33	5%	3W	F	
⚠R956	1-249-405-11	CARBON	100	5%	1/4W	F	
R957	1-249-410-11	CARBON	270	5%	1/4W	F	
R958	1-249-410-11	CARBON	270	5%	1/4W	F	
R959	1-249-441-11	CARBON	100K	5%	1/4W		
R960	1-249-429-11	CARBON	10K	5%	1/4W		
⚠R963	1-249-395-11	CARBON	15	5%	1/4W	F	
R964	1-249-423-11	CARBON	3.3K	5%	1/4W	F	
R965	1-249-437-11	CARBON	47K	5%	1/4W		
R966	1-249-429-11	CARBON	10K	5%	1/4W		
R967	1-249-429-11	CARBON	10K	5%	1/4W		
R968	1-249-417-11	CARBON	1K	5%	1/4W	F	

The components identified by mark ⚠ or dotted line with mark ⚠ are critical for safety.
Replace only with part number specified.

MAIN | POWER | STAND BY | SP SW-1 | SP SW-2 | SP SW-3

Ref.No.	Part No.	Description				Remark
R969	1-249-429-11	CARBON	10K	5%	1/4W	
R970	1-249-426-11	CARBON	5.6K	5%	1/4W	
R971	1-249-417-11	CARBON	1K	5%	1/4W	F
R972	1-249-426-11	CARBON	5.6K	5%	1/4W	
R973	1-247-830-11	CARBON	910	5%	1/4W	
R974	1-249-425-11	CARBON	4.7K	5%	1/4W	F
R999	1-249-397-11	CARBON	22	5%	1/4W	F
		< VARIABLE RESISTOR >				
RV1	1-223-240-11	RES, ADJ, CARBON 22K				
		< RELAY >				
RY401	1-515-614-11	RELAY				
RY701	1-515-533-11	RELAY				
		< TERMINAL >				
TM1	1-537-488-11	TERMINAL BOARD (ANT)(ANTENNA)				
TM701	1-537-376-11	TERMINAL BOARD (SP)(SPEAKERS)				
		< TUNER >				
TU1	1-239-562-11	ENCAPSULATED COMPONENT (G)				
TU1	1-239-611-11	ENCAPSULATED COMPONENT (AEP)				
		< VIBRATOR >				
X1	1-579-900-21	VIBRATOR, CRYSTAL (4.3MHz)				
X2	1-577-358-21	VIBRATOR, CERAMIC (4MHz)				
**********						
*	1-647-638-11	POWER BOARD				
		**********				
		< CAPACITOR >				
⚠C901	1-161-744-00	CERAMIC	0.01uF		400V	
C902	1-161-741-00	CERAMIC	0.001uF	10%	400V	(G)
C903	1-161-741-00	CERAMIC	0.001uF	10%	400V	(G)
C911	1-164-159-11	CERAMIC	0.1uF		50V	(G)
C912	1-164-159-11	CERAMIC	0.1uF		50V	(G)
		< CONNECTOR >				
* CNP901	1-564-321-00	PIN, CONNECTOR 2P				
* CNP902	1-580-230-11	PIN, CONNECTOR (PC BOARD) 3P				
* CNP903	1-580-230-11	PIN, CONNECTOR (PC BOARD) 3P				
* CNP951	1-564-507-11	PLUG, CONNECTOR 4P				
		< DIODE >				
D901	8-719-987-63	DIODE 1N4148M				

Ref.No.	Part No.	Description	Remark
		< FUSE >	
⚠F902	1-532-259-00	FUSE (T1.6A 250V)	
⚠F903	1-532-259-00	FUSE (T1.6A 250V)	
		< FUSE HOLDER >	
FH952	1-533-293-31	HOLDER, FUSE	
		< RELAY >	
RY901	1-515-720-11	RELAY	
		< TRANSFORMER >	
⚠T902	1-450-358-11	TRANSFORMER, POWER	
**********			
*	1-647-639-11	STAND BY BOARD	
		**********	
		< CONNECTOR >	
* CNP107	1-565-295-11	PLUG, CONNECTOR 4P	
		< SWITCH >	
S137	1-554-303-21	SWITCH, TACTILE (POWER)	
**********			
*	1-647-633-11	SP SW-1 BOARD	
		**********	
		< CONNECTOR >	
CNP702	1-691-173-11	CONNECTOR (BOARD TO BOARD) 3P	
		< SWITCH >	
S701	1-571-485-11	SWITCH, PUSH (2 KEY)(SPEAKERS)	
**********			
*	1-647-634-11	SP SW-2 BOARD	
		**********	
**********			
*	1-647-635-11	SP SW-3 BOARD	
		**********	
		< CONNECTOR >	
CNP701	1-573-109-11	PIN, CONNECTOR 15P	
**********			

The components identified by mark ⚠ or dotted line with mark ⚠ are critical for safety.
Replace only with part number specified.

TONE | TRANSFORMER | VOLUME

Ref.No.	Part No.	Description				Remark
*	1-647-632-11	TONE BOARD				
		**********				
		< CAPACITOR >				
C501	1-130-489-00	MYLAR	0.033uF	5%	50V	
C502	1-124-250-00	ELECT	0.15uF	20%	50V	
C503	1-130-481-00	MYLAR	0.0068uF	5%	50V	
C504	1-137-441-91	FILM	0.027uF	5%	50V	
C551	1-130-489-00	MYLAR	0.033uF	5%	50V	
C552	1-124-250-00	ELECT	0.15uF	20%	50V	
C553	1-130-481-00	MYLAR	0.0068uF	5%	50V	
C554	1-137-441-91	FILM	0.027uF	5%	50V	
		< CONNECTOR >				
* CNP109	1-566-968-11	HOUSING, CONNECTOR(PC BOARD)6P				
		< RESISTOR >				
R501	1-249-429-11	CARBON	10K	5%	1/4W	
R502	1-249-422-11	CARBON	2.7K	5%	1/4W	F
R507	1-249-415-11	CARBON	680	5%	1/4W	F
R508	1-247-903-00	CARBON	1M	5%	1/4W	
R509	1-247-903-00	CARBON	1M	5%	1/4W	
R510	1-247-903-00	CARBON	1M	5%	1/4W	
R551	1-249-429-11	CARBON	10K	5%	1/4W	
R552	1-249-422-11	CARBON	2.7K	5%	1/4W	F
R557	1-249-415-11	CARBON	680	5%	1/4W	F
R558	1-247-903-00	CARBON	1M	5%	1/4W	
R559	1-247-903-00	CARBON	1M	5%	1/4W	
R560	1-247-903-00	CARBON	1M	5%	1/4W	
		< VARIABLE RESISTOR >				
RV401	1-223-362-11	RES, VAR, CARBON 100K/100K (BALANCE)				
RV402	1-223-363-11	RES, VAR, CARBON 125K/125K (TREBLE)				
RV403	1-238-965-21	RES, VAR, CARBON 100K/100K (BASS)				
**********						
*	1-647-631-11	TRANSFORMER BOARD				
		**********				
		< CAPACITOR >				
⚠C921	1-164-159-11	CERAMIC	0.1uF		50V (G)	
⚠C922	1-164-159-11	CERAMIC	0.1uF		50V (G)	
		< CONNECTOR >				
* CNP955	1-564-243-00	PIN, CONNECTOR 6P				
**********						

Ref.No.	Part No.	Description				Remark
*	A-4360-428-A	VOLUME BOARD, COMPLETE				
		**********				
		< CAPACITOR >				
C436	1-137-371-11	FILM	0.015uF	5%	50V	
C438	1-124-927-11	ELECT	4.7uF	20%	100V	
C439	1-124-927-11	ELECT	4.7uF	20%	100V	
C486	1-137-371-11	FILM	0.015uF	5%	50V	
C505	1-162-206-31	CERAMIC	20PF	5%	50V	
C506	1-124-925-11	ELECT	2.2uF	20%	100V	
C507	1-162-196-31	CERAMIC	5.6PF	10%	50V	
C508	1-123-382-00	ELECT	3.3uF	20%	100V	
C511	1-124-464-11	ELECT	0.22uF	20%	50V	
C513	1-123-382-00	ELECT	3.3uF	20%	100V	
C516	1-124-477-11	ELECT	47uF	20%	25V	
C517	1-124-477-11	ELECT	47uF	20%	25V	
C555	1-162-206-31	CERAMIC	20PF	5%	50V	
C556	1-124-925-11	ELECT	2.2uF	20%	100V	
C557	1-162-196-31	CERAMIC	5.6PF	10%	50V	
C558	1-123-382-00	ELECT	3.3uF	20%	100V	
C563	1-123-382-00	ELECT	3.3uF	20%	100V	
		< CONNECTOR >				
* CNP103	1-750-383-11	CONNECTOR, BOARD TO BOARD 11P				
* CNP401	1-566-971-11	PIN, CONNECTOR (PC BOARD) 6P				
* CNP402	1-566-972-11	PIN, CONNECTOR (PC BOARD) 7P				
		< DIODE >				
D404	8-719-987-63	DIODE 1N4148M				
		< IC >				
IC403	8-759-112-93	IC uPC4570HA-1				
		< TRANSISTOR >				
Q404	8-729-202-67	TRANSISTOR 2SK246-GR3				
Q454	8-729-202-67	TRANSISTOR 2SK246-GR3				
		< RESISTOR >				
R445	1-247-858-11	CARBON	13K	5%	1/4W	
R495	1-247-858-11	CARBON	13K	5%	1/4W	
R503	1-249-441-11	CARBON	100K	5%	1/4W	
R504	1-249-431-11	CARBON	15K	5%	1/4W	
R505	1-249-438-11	CARBON	56K	5%	1/4W	
R506	1-249-441-11	CARBON	100K	5%	1/4W	
R511	1-249-441-11	CARBON	100K	5%	1/4W	
R513	1-247-903-00	CARBON	1M	5%	1/4W	
R514	1-249-405-11	CARBON	100	5%	1/4W	F
R515	1-249-405-11	CARBON	100	5%	1/4W	F
R553	1-249-441-11	CARBON	100K	5%	1/4W	

The components identified by mark ⚠ or dotted line with mark ⚠ are critical for safety.
Replace only with part number specified.

Ref.No.	Part No.	Description	Remark
R554	1-249-431-11	CARBON 15K 5% 1/4W	
R555	1-249-438-11	CARBON 56K 5% 1/4W	
R556	1-249-441-11	CARBON 100K 5% 1/4W	
		< VARIABLE RESISTOR >	
RV701	1-241-850-11	RES, VAR, CARBON 100K/100K (VOLUME)	
		**********	
		MISCELLANEOUS	
		**********	
10	1-696-456-11	WIRE (FLAT TYPE) (31 CORE)	
⚠63	1-575-651-11	CORD, POWER	
65	1-750-854-11	CORD (WITH CONNECTOR)	
⚠CNJ903	1-526-794-11	OUTLET, AC (AC OUTLET)	
⚠F902	1-532-259-00	FUSE (T1.6A 250V)	
⚠F903	1-532-259-00	FUSE (T1.6A 250V)	
* FH952	1-533-293-11	HOLDER, FUSE	
FL300	1-517-141-11	INDICATOR TUBE, FLUORESCENT	
⚠T901	1-450-363-11	TRANSFORMER, POWER	
		**********	
		ACCESSORIES & PACKING MATERIALS	
		**********	
	1-465-423-11	REMOTE COMMANDER (RM-S103)	
	1-501-374-11	ANTENNA, LOOP	
	1-501-594-11	ANTENNA (FM) (AEP)	
	2-181-754-01	COVER (MLY), BATTERY	
	3-756-537-11	MANUAL, INSTRUCTION (ENGLISH, FRENCH, GERMAN, DUTCH) (AEP)	
	3-756-537-41	MANUAL, INSTRUCTION (GERMAN) (G)	
	3-756-537-51	MANUAL, INSTRUCTION (SPANISH, SWEDISH, DANISH, FINNISH) (AEP2)	
*	4-952-676-01	CUSHION	
*	4-957-780-01	INDIVIDUAL CARTON	
		**********	
		**********	
		HARDWARE LIST	
		**********	
#1	7-682-548-04	SCREW +BVTT 3X8 (S)	
#2	7-682-548-09	SCREW +BVTT 3X8 (S)	
#3	7-682-547-09	SCREW +BVTT 3X6 (S)	
#4	7-682-560-04	SCREW +BVTT 4X6 (S)	
#5	7-685-646-79	SCREW +BVTP 3X8 TYPE2 N-S	
#6	7-685-647-79	SCREW +BVTP 3X10 TYPE2 IT-3	
#7	7-621-849-00	SCREW, TAPPING	

The components identified by mark ⚠ or dotted line with mark ⚠ are critical for safety.
Replace only with part number specified.

Sony Corporation
Audio Group
9-957-979-11
Published by Audio Sector Quality Assurance Dept.