Quality Uncompromised

ROTEL®

# Technical Manual

## STEREO POWER AMPLIFIER

# RB-971

## Table of Contents


Specification.....1
Wiring Diagram.....2
Parts List.....3
Adjustment.....4
PCB Assembly.....5,6
Schematic Diagram.....7,8


## Specification

| | | |
|---|---|---|
| Continuous Power Output | (20-20 kHz, ≤ 0.03%, 8 ohms) | 70 watts/ch. |
| | (20-20 kHz, ≤ 0.05%, 4 ohms) | 95 watts/ch. |
| Bridged Mono Power Output | (20-20 kHz, ≤ 0.1% THD, 8 ohms) | 180 watts |
| Total Harmonic Distortion | (20 Hz-20 kHz, 8 ohms) | ≤ 0.03% |
| Intermodulation Distortion | (60 Hz : 7 kHz, 4:1) | ≤ 0.03% |
| Frequency Response | | 10-100,000 Hz, ± 1 dB |
| Damping Factor | (20-20,000 Hz, 8 ohms) | 500 |
| Speaker Impedance | (Normal mode) | 4 ohms minimum |
| | (Bridged mode) | 8 ohms minimum |
| Signal to Noise Ratio | (IHF A network) | 116 dB |
| Input Impedance/Sensitivity | | 33 k Ohms/1.0 volt |
| Power Requirements | | 115 Volts, 60 Hz or<br>230 Volts, 50 Hz |
| Power Consumption | | 250 Watts |
| Dimensions (W, H, D) | | 440 x 92 x 334 mm<br>17.38 x 4.76 x 13.3" |
| Weight (net) | | 7.2 kg., 15.84 lb. |


## THE ROTEL CO., LTD

BUNZAN-SHINSEN-BLD. 4F 10-10 SHINSEN-CHO, SHIBUYA-KU,
TOKYO 150-0045, JAPAN


Serial. NO.
Begining

# Wiring Diagram

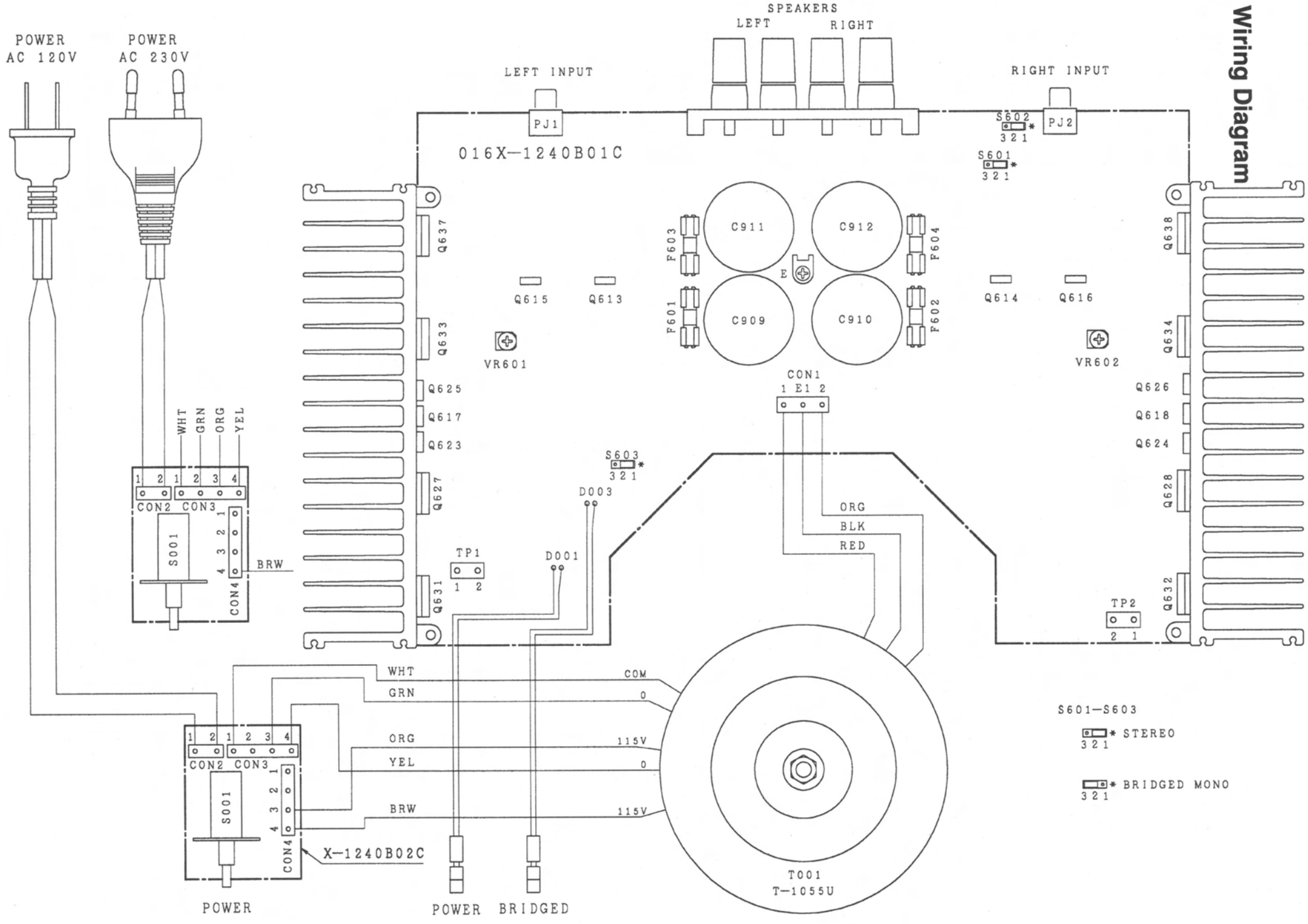

# Parts List

| SYMBOL | PARTS NO. | DESCRIPTION |
|---|---|---|
| | **X-1240-01 PCB ASSEMBLY** | |
| C601, 602 | 041 50BGF4R7M | CAP, ELEC. 50V4.7UF |
| C603, 604 | 044 TFKP2–100V681H | CAP, FILM 100V680PF |
| C605, 606 | 044 LFSC160V221H | CAP, STYROL 160V220PF |
| C607, 608 | 041 25BGF100M | CAP, ELEC. 25V100UF |
| C609, 610 | 044 LFSC160V331H | CAP, STYROL 160V330PF |
| C611, 612 | 041 50BGF10M | CAP, ELEC. 50V10UF |
| C613–616 | 044 LFSC160V561H | CAP, STYROL 160V560PF |
| C617, 618 | 044 LFSC160V471H | CAP, STYROL 160V470PF |
| C623, 624 | 044 MKT18–100V104K | CAP, FILM 100V0.1UF |
| C803, 804 | 041 GS50V4R7–B | CAP, ELEC. 50V4.7UF |
| C901–908 | 043 LTC500V103 | CAP, CERA. 500V0.01UF |
| C909–912 | 041 ALC20S1022DF | CAP, ELEC. 50V8200UF |
| D601–608 | 034 LT1N4148–86 | DIODE |
| D609–612 | 034 LT1N4003–TB | DIODE |
| D803, 805 | 034 LT1N4003–TB | DIODE |
| D901, 902 | 034 LBR84 | POWER DIODE |
| F601–604 | 036 5ST3.15 | MINI FUSE 250V3.15A |
| PJ1 | 066 L4TR–2487#8 | 1P PIN JACK(WHT) |
| PJ2 | 066 L4TR–2487#7 | 1P PIN JACK(RED) |
| Q601–606 | 033 LT2SC2362KAA–FG | TRANSISTOR |
| Q607–612 | 033 LT2SA1016KAA–FG | TRANSISTOR |
| Q613, 614 | 033 L2SB631K–EF | TRANSISTOR |
| Q615, 616 | 033 L2SD600K–EF | TRANSISTOR |
| Q619, 620 | 033 T2SC3478T–LKU | TRANSISTOR |
| Q621, 622 | 033 T2SA1376T–LKU | TRANSISTOR |
| R601, 602 | 054 LEE10–102 | R, METAL 1K |
| R603, 604 | 054 LEE10–333 | R, METAL 33K |
| R605, 606 | 054 LEE10–471 | R, METAL 470R |
| R607–610 | 054 LTMK201K5FECZ | R, METAL 1% 1.5K |
| R611, 612 | 054 LTMK2220RFECZ | R, METAL 1% 220R |
| R613, 614 | 054 LTMF1/4–5600F | R, MRS25 560R |
| R615–618 | 054 LTMK201K5FECZ | R, METAL 1% 1.5K |
| R619, 620 | 054 LTMK2220RFECZ | R, METAL 1% 220R |
| R621, 622 | 054 LTMK2047KFECZ | R, METAL 1% 47K |
| R623, 624 | 054 LTMK2100RFECZ | R, METAL 1% 100R |
| R625, 626 | 054 LTMF1/4–6801F | R, MRS25 6.8K |
| R627, 628 | 054 LTMF1/4–3901F | R, MRS25 3.9K |
| R629, 630 | 054 LTMK2100RFECZ | R, METAL 1% 100R |
| R631, 632 | 054 LTMK2001KFECZ | R, METAL 1% 1K |
| R633, 634 | 054 LTMK2047RFECZ | R, METAL 1% 47R |
| R635, 636 | 054 NIR2–0.22JF | R, METAL 2W 0.22R |
| R639–422 | 054 NIR2–0.22JF | R, METAL 2W 0.22R |
| R645, 646 | 054 NIR2–0.22JF | R, METAL 2W 0.22R |
| R647, 648 | 054 IWS10JF | R, METAL 1W 10R |
| R651, 652 | 054 LTMK2012KFECZ | R, METAL 1% 12K |
| R653, 654 | 054 LTMF3300 | R, METAL 330R |
| R655–658 | 054 LTMK2220RFECZ | R, METAL 1% 220R |
| R661 | 054 LTMK2012KFECZ | R, METAL 1% 12K |
| R810, 819 | 054 1WS6.8KJF | R, METAL 1W 6.8K |
| S601–603 | 068 TD–03SG | 3P CONNECTOR WAFER |

| SYMBOL | PARTS NO. | DESCRIPTION |
|---|---|---|
| VR601, 602 | 051 LVM6CKPV1S2.2K | SEMI-FIXED RESISTOR |
| | 067 4TR–3090 | SPEAKER TERMINAL |
| | 068 DM–2GM–O | 2P SHORT SOCKET |
| | 069 C–3417A | FUSE CLIP |
| | **X-1240-02 PCB ASSEMBLY** | |
| C001 | 044 DE7150F472M | SPARK KILLER |
| S001 | 061 LC–4176A01T | POWER SWITCH |
| | **HEAT SINKER ASSEMBLY** | |
| Q617, 618 | 032 2SD1953 | TRANSISTOR |
| Q623, 624 | 033 2SC4793–M | TRANSISTOR |
| Q625, 626 | 033 2SA1837–M | TRANSISTOR |
| Q627, 628 | 033 L2SD1047–DE | POWER TRANSISTOR |
| Q631, 632 | 033 L2SD1047–DE | POWER TRSNSISTOR |
| Q633, 634 | 033 L2SB817–DE | POWER TRANSISTOR |
| Q637, 638 | 033 L2SB817–DE | POWER TRANSISTOR |
| | 017 RM4–18A00 | HEAT SINKER BOARD |
| | 019 TO–220 | INSULATION SHEET (S) |
| | 019 TO–3P | INSULATION SHEET (L) |
| | **OTHERS** | |
| | 011 TFP–802 | FRONT PANEL ASSY |
| | 012 L4TQF–15 | POWER BUTTON 14X14 |
| | 014 C–4550A08 | UPPER COVER |
| | 014 L4TR–2797#2 | ORNAMENT SIDE BOARD |
| | 014 RM4–07A00 | BOTTOM BOARD |
| | 015 RP–333A | REAR CHASSIS |
| | 019 L4TSH–19#2 | PLASTIC FOOT 50F |
| | 019 4TR–2823#2 | PLASTIC FOOT 24F |
| | 022 T–1055U01 | POWER TRANSFORMER |
| | 072 L4TR–670#5 | AC CORD for STD |
| | 072 LC–3763 | AC CORD for AUSTRALIA |
| | 072 C–4572A01 | AC CORD for UK |
| | 072 C–4573A01 | AC CORD for CEE |
| | 081 RM4–21A00 | INSIDE CARTON |
| | 081 TZ–165 | STYROL SIDE MOULDING |

# Adjustment

Instruments : DC milli–voltmeter
Notes : Prior to Bias Adjustment, run about 5minutes with rated output(8ohms) and warm up Power Transistor and Heat Sink. Set input off.

| Step | Coupling | | Location | Adjust | Adjust for |
|---|---|---|---|---|---|
| | Plus Lead | Minus Lead | | | |
| **1** | TP1-1 | TP1-2 | X–1240-01 PCB | VR601 | DC milli–voltmeter reads 5mV |
| **2** | TP2-1 | TP2-2 | X–1240-01 PCB | VR602 | |

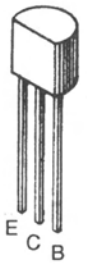


2SA1016K
2SC2362K
2SA1376
2SC3478

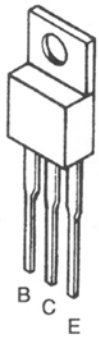


2SA1837
2SC4793

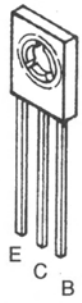


2SB631K
2SD600K
2SD1953

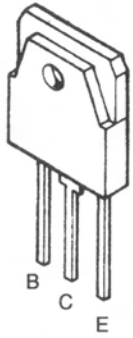


2SB817
2SD1047

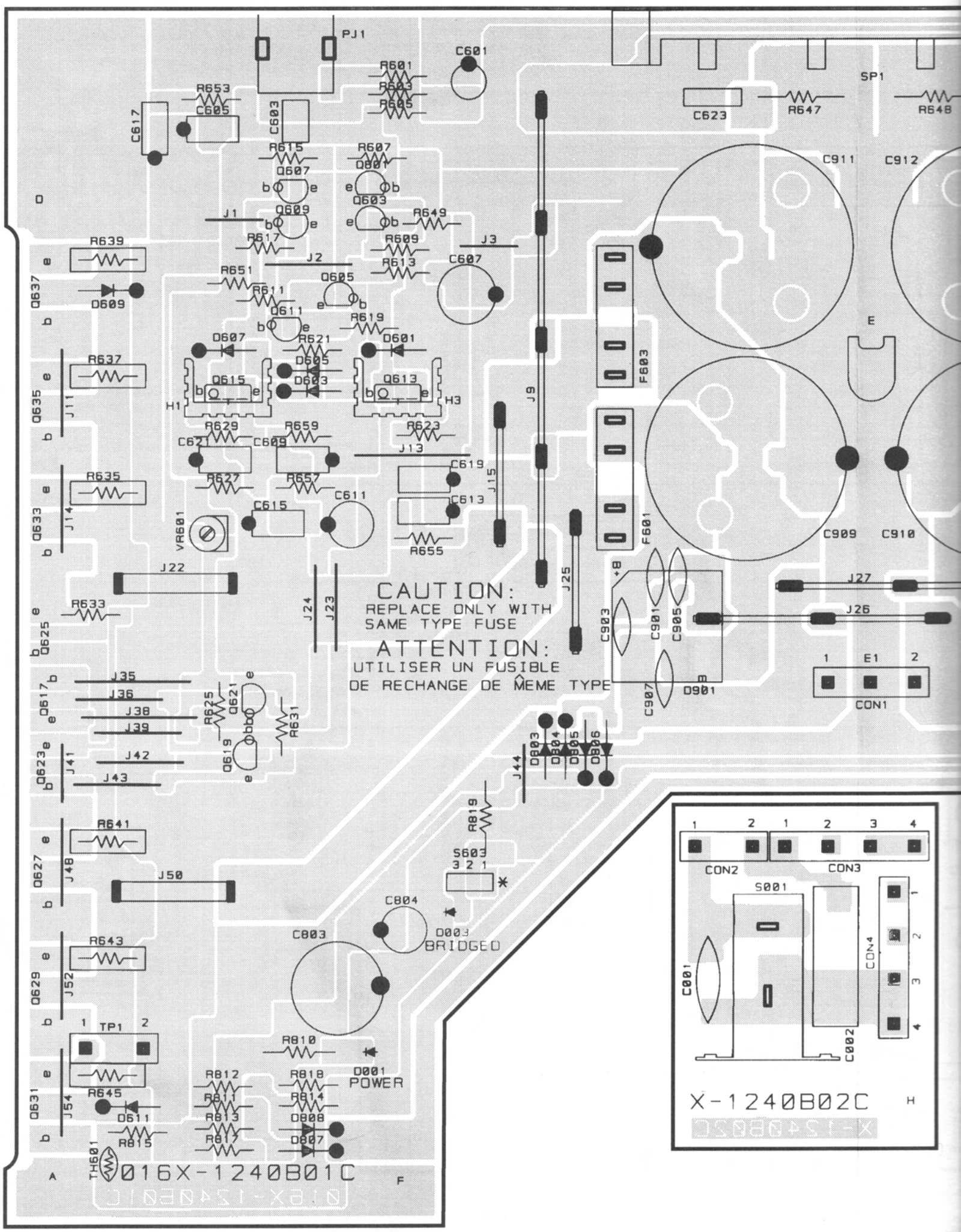

CAUTION:
REPLACE ONLY WITH
SAME TYPE FUSE
ATTENTION:
UTILISER UN FUSIBLE
DE RECHANGE DE MÊME TYPE
BRIDGED
POWER
016X-1240B01C
X-1240B02C

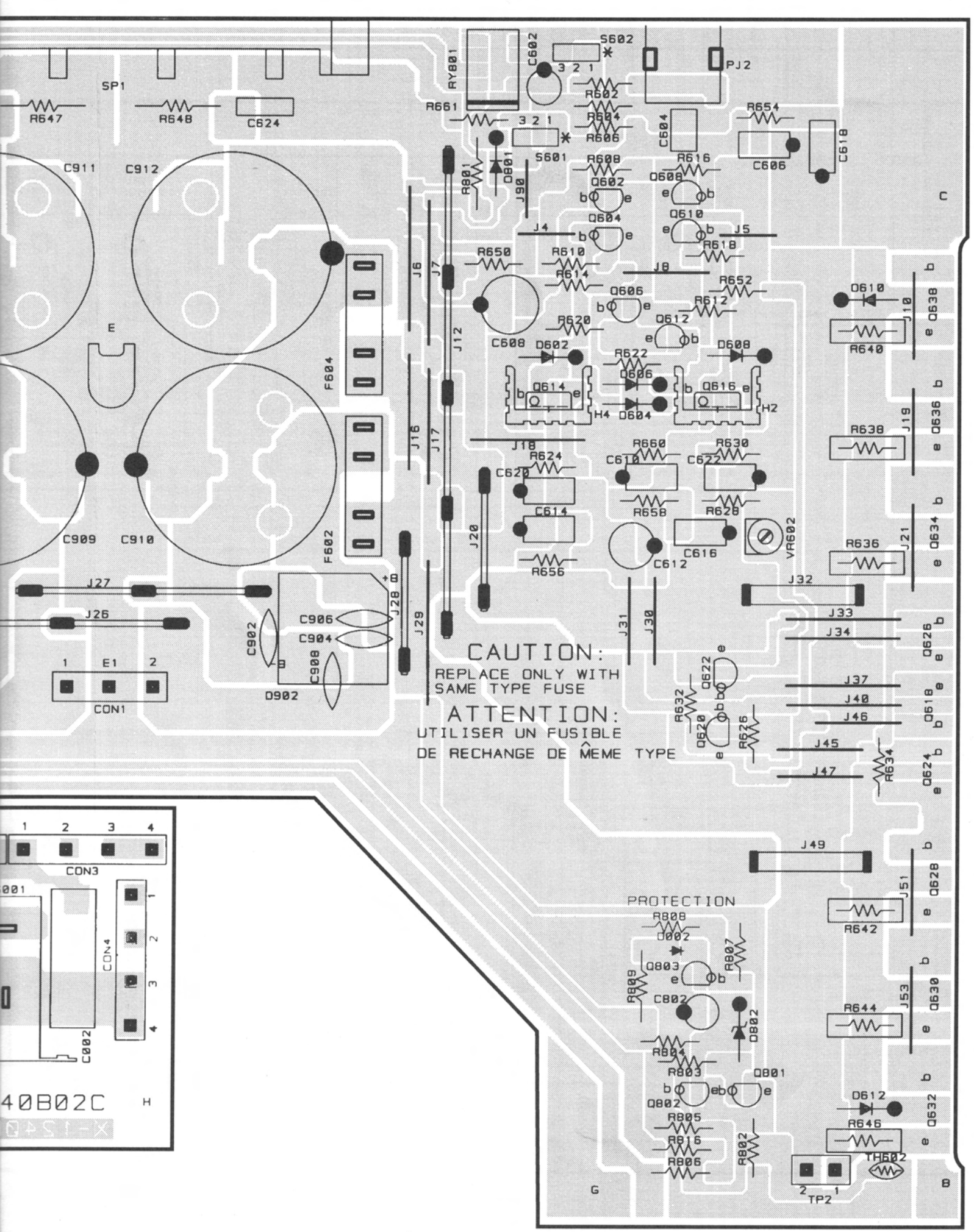
CAUTION:
REPLACE ONLY WITH
SAME TYPE FUSE
ATTENTION:
UTILISER UN FUSIBLE
DE RECHANGE DE MÊME TYPE
PROTECTION
SP1
R647
R648
C624
C911
C912
C909
C910
E
F604
F602
RY801
R661
C602
S602
PJ2
R602
R604
R606
S601
R801
D801
J90
R608
R616
Q602
Q608
Q604
Q610
C604
R654
C606
C618
J4
J5
R618
R650
R610
R614
J8
R652
Q606
R612
Q612
R620
C608
D602
R622
D608
D606
Q614
Q616
H4
D604
H2
J6
J7
J12
J16
J17
J18
R624
C620
C614
R656
R660
R630
C610
C622
R658
R628
C616
C612
VR602
J20
J27
J26
J28
J29
J31
J30
J32
J33
J34
J37
J40
J46
J45
J47
J49
J51
J53
J10
J19
J21
R640
R638
R636
R634
R642
R644
R646
D610
D612
Q638
Q636
Q634
Q626
Q618
Q624
Q628
Q630
Q632
C906
C904
C902
C908
D902
CON1
E1
CON3
CON4
C002
40B02C
R808
D002
Q803
R807
R809
C802
D802
R804
R803
Q801
Q802
R805
R816
R806
R802
TH602
TP2
C
G
B

# Schematic Diagram

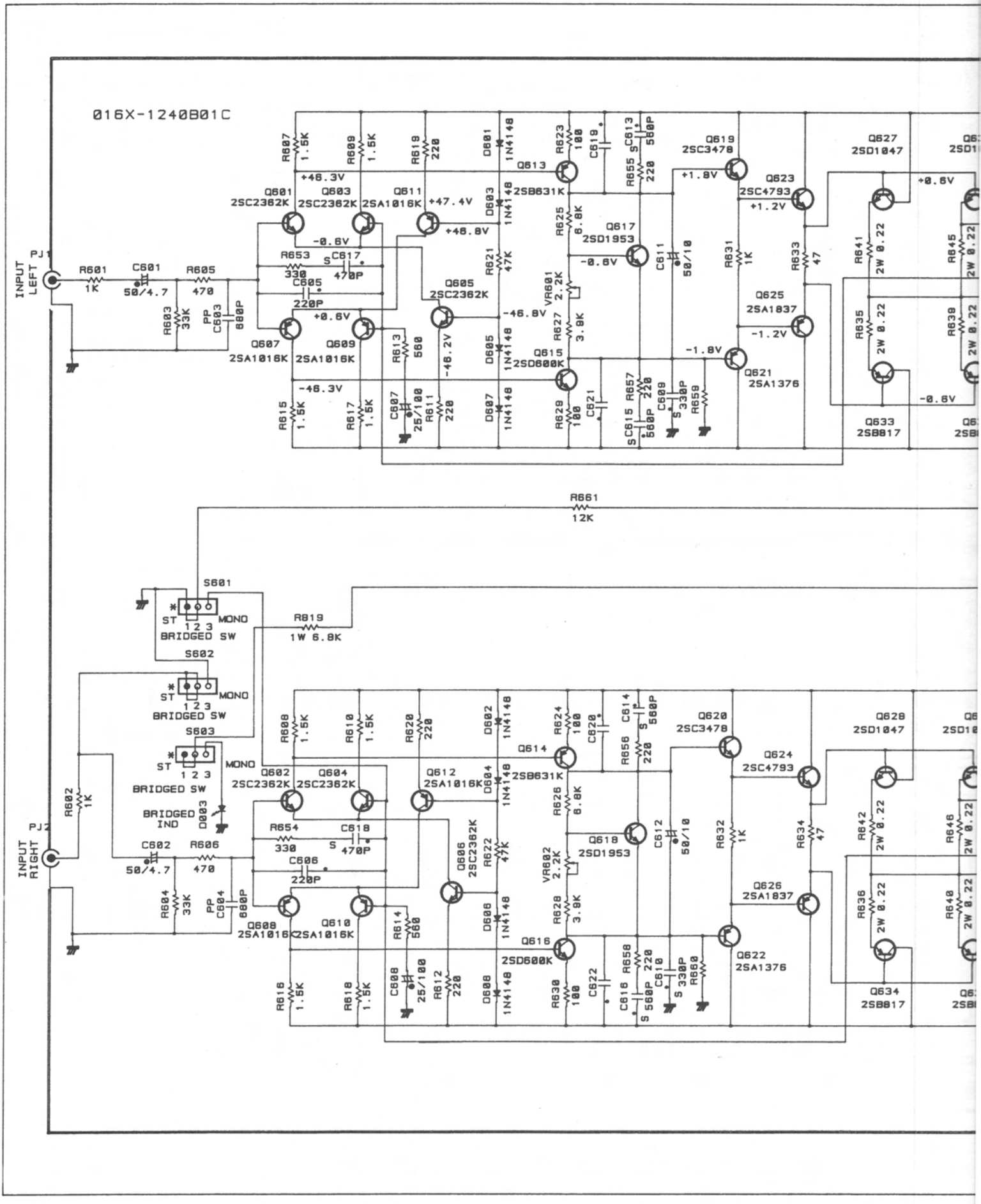

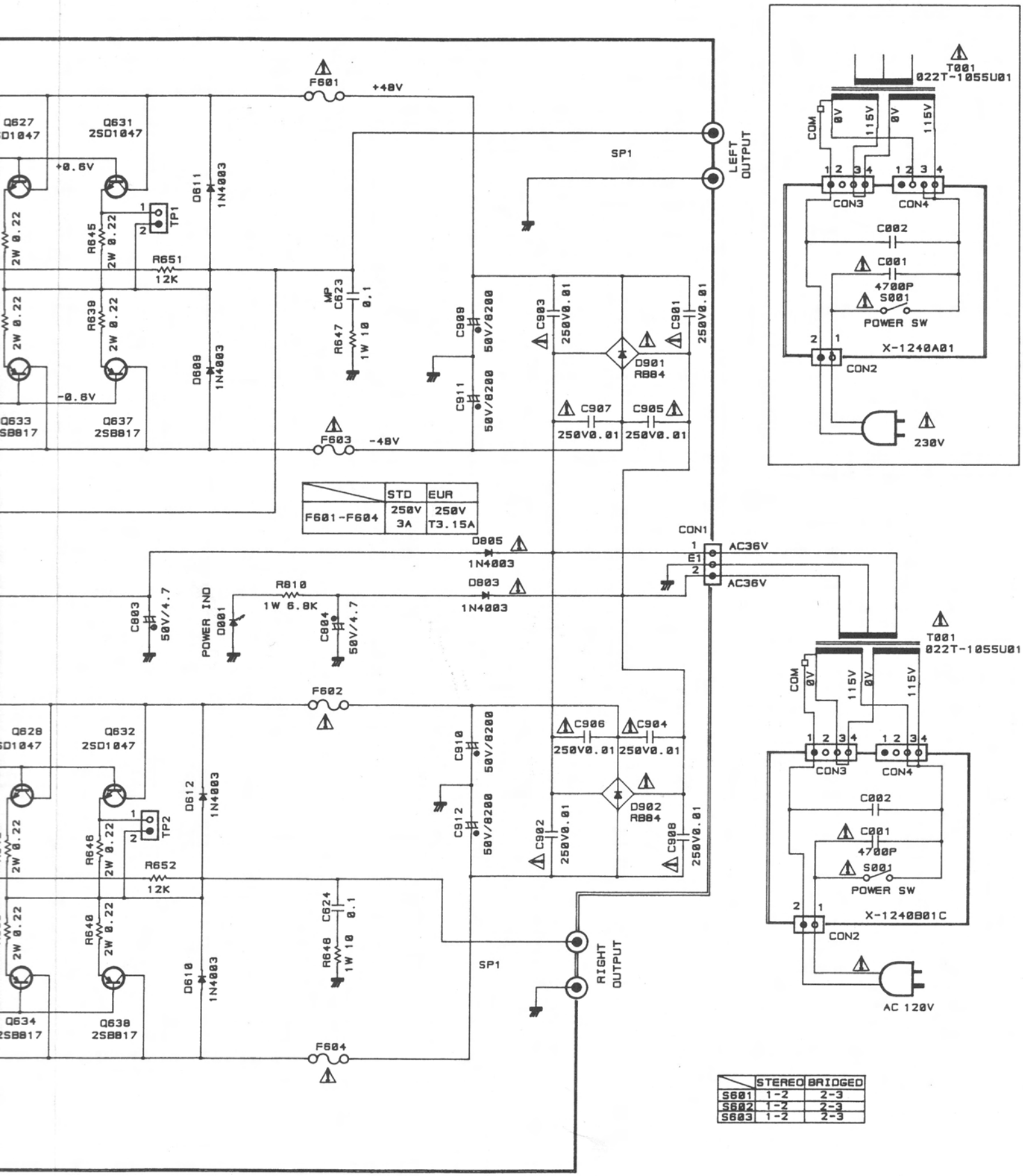


STEREO POWER AMPLIFIER RB971