Service Manual

Pioneer

ORDER NO.
RRV2379

AUDIO/VIDEO MULTI-CHANNEL RECEIVER

VSX-839RDS

THIS MANUAL IS APPLICABLE TO THE FOLLOWING MODEL(S) AND TYPE(S).

Type	Model	Power Requirement	The voltage can be converted by the following method.
	VSX-839RDS		
HYXJI	○	AC220-230V	AC240V, ✻
HVXJI	○	AC230V	AC240V, ✻

✻ : Alter the wiring of the Power-supply block at the primary winding of Power-transformer referring to the "Line Voltage Selection" described in Service Manual.

● This service manual should be used together with the following manual(s):

Model No.	Order No.	Remarks
VSX-35TX/KUXJI/CA	RRV2351	

CONTENTS

1. CONTRAST OF MISCELLANEOUS PARTS ····· 2
2. PCB CONNECTION DIAGRAM ····· 12
3. SCHEMATIC DIAGRAM ····· 14

1. CONTRAST OF MISCELLANEOUS PARTS

NOTES:
- *Parts marked by "NSP" are generally unavailable because they are not in our Master Spare Parts List.*
- *The ⚠ mark found on some component parts indicates the importance of the safety factor of the part. Therefore, when replacing, be sure to use parts of identical designation.*
- *Screws adjacent to ▼ mark on product are used for disassembly.*
- *Reference Nos. indicate the pages and Nos. in the service manual for the base model.*
- *When ordering resistors, first convert resistance values into code form as shown in the following examples.*

Ex.1 When there are 2 effective digits (any digit apart from 0), such as 560 ohm and 47k ohm (tolerance is shown by J=5%, and K=10%).

560	→	*56 x 10^1* →	*561* ·····	*RD1/4PU 5 6 1 J*
47k	→	*47 x 10^3* →	*473* ·····	*RD1/4PU 4 7 3 J*
0.5	→	*R50* ·····		*RN2H R 5 0 K*
1	→	*1R0* ·····		*RS1P 1 R 0 K*

Ex.2 When there are 3 effective digits (such as in high precision metal film resistors).

5.62k	→	*562 x 10^1* →	*5621* ·····	*RN1/4PC 5 6 2 1 F*

■ CONTRAST TABLE

VSX-839RDS/HYXJI, HVXJI and VSX-35TX/KUXJI/CA are constructed the same except for the following:

Ref. No.	Mark	Symbol and Description	Part No.			Remarks
			VSX-35TX /KUXJI/CA	VSX-839RDS /HYXJI	VSX-839RDS /HVXJI	
		PCB ASSEMBLIES				
P5- 1		FM/AM TUNER UNIT	AXQ7231	AXQ7232	AXQ7232	
	NSP	MAIN ASSY	AWK7591	AWK7621	AWK7621	
P5- 5		├─ MAIN CONTROL ASSY	AWX7560	AWX7625	AWX7625	
P5-12		└─ DSP ASSY	AWX7561	AWX7626	AWX7626	
	NSP	COMPLEX ASSY	AWK7592	AWK7622	AWK7624	
P5- 2		├─ EX I/O (5.1CH I/O) ASSY	AWX7568	AWX7627	AWX7627	
P5- 6		├─ A-CONNECTION ASSY	AWX7566	AWX7619	AWX7619	
P5-12		├─ V-CONNECTION ASSY	AWX7567	AWX7717	AWX7717	
P5-13		├─ TRANS2–2 ASSY	AWX7565	AWX7720	AWX7720	
P5-15		└─ PRIMARY ASSY	AWX7563	AWX7596	AWX7604	
	NSP	POWER ASSY	AWK7593	AWK7669	AWK7669	
P5- 4		├─INPUT ASSY	AWX7573	AWX7600	AWX7600	
P5-10		├─SP/PS ASSY	AWX7571	AWX7735	AWX7735	
		└─FAN DRIVER ASSY	Not used	AWX7599	AWX7599	No. 1
	NSP	FRONT ASSY	AWK7594	AWK7623	AWK7623	
P5- 7		├─COMPOSITE ASSY	AWX7581	AWX7617	AWX7617	
P5- 8		├─S VIDEO ASSY	AWX7580	AWX7616	AWX7616	
P6- 3		├─V-AMP ASSY	AWX7578	AWX7723	AWX7723	
P7- 1		├─DISPLAY ASSY	AWX7574	AWX7601	AWX7601	
P7- 6		├─FRONT DIGIN ASSY	AWX7648	Not used	Not used	
		└─P- SW ASSY	Not used	AWX7593	AWX7593	No. 2
		PACKING SECTION				
P3- 2		FM Wire Antenna	ADH7004	ADH7005	ADH7005	
P3- 3		Operating Instructions (English)	ARB7222	ARB7225	ARB7225	
P3- 3		Operating Instructions (German)	Not used	ARC7293	Not used	
P3- 3		Operating Instructions (French)	Not used	ARC7292	Not used	
P3- 3		Operating Instructions (Italian)	Not used	ARC7294	Not used	
P3- 3		Operating Instructions (Dutch)	Not used	ARC7296	Not used	
P3- 3		Operating Instructions (Swedish)	Not used	ARC7298	Not used	
P3- 3		Operating Instructions (Spanish)	Not used	ARC7295	Not used	
P3- 3		Operating Instructions (Portuguese)	Not used	ARC7297	Not used	
P3- 4		Remote Control Unit (35TX)	AXD7266	Not used	Not used	
P3- 4		Remote Control Unit (839RDS)	Not used	AXD7270	AXD7270	
P3- 8		Packing Case	AHD7860	AHD7866	AHD7866	
P3-11	NSP	Warranty Card	ARY7007	ARY7022	ARY7022	

Ref. No.	Mark	Symbol and Description	Part No.			Remarks
			VSX-35TX /KUXJI/CA	VSX-839RDS /HYXJI	VSA-839RDS /HVXJI	
		EXTERIOR SECTION				
P5-18	⚠	Power Transformer	ATS7284	ATS7285	ATS7285	
P5-19	⚠	Fuse (FU4, FU5 :)	REK1112 (2.5A)	REK1025 (T2.0A)	REK1025 (T2.0A)	
P5-21	⚠	Fuse (FU1 :)	VEK1029 (10A)	REK-106 (T4.0A)	REK-106 (T4.0A)	
P5-26		Cord Stopper	CM-22C	CM-22B	CM-22B	
P5-27	⚠	AC Power Cord	VDG1075	VDG1080	VDG1076	
P5-28		Spacer	AEB7210	AEB7213	AEB7213	
P5-31		Rear Panel	ANC7910	ANC7913	ANC7940	
P5-35		Trans Shield	ANG7293	ANG7294	ANG7294	
P5-41		Earth Terminal	AKE-031	Not used	Not used	
P5-46		65 Label	ARW7050	Not used	Not used	
	⚠	Fan Motor	Not used	AXM7012	AXM7012	No. 3
		Locking Card Spacer	Not used	AEC7160	AEC7160	No. 4
		HEAT SINK SECTION				
	⚠	Thermistor	Not used	AEX7004	AEX7004	No. 5
		FRONT PANEL SECTION				
P7- 9		4P Flexible Cable/60V	ADD7238	Not used	Not used	
P7-12		5P Shield Wire with Housing	ADX7344	Not used	Not used	
P7-14		Door	AMB7692	ANB7223	ANB7223	
P7-19		Digital Cap	AAD7576	Not used	Not used	
P7-21		Window	AAK7769	AAK7770	AAK7770	
P7-22		Door Sheet	AAK7783	AAK7779	AAK7779	
P7-25		Front Panel	AMB7691	ANB7231	ANB7231	
P7-30		Damper Assy	AXA7089	AXA7088	AXA7088	
P7-31		Name Plate	PAM1776	PAN1376	PAN1376	
		POWER Button	Not used	ADD7442	ADD7442	No. 6

Notes : ●The numbers in the remarks column correspond to the numbers on the " EXPLODED VIEWS ".
● For PCB ASSEMBLIES, Refer to "CONTRAST OF PCB ASSEMBLIES", "2. PCB CONNECTION DIAGRAM" and "3. SCHEMATIC DIAGRAM".

■ EXPLODED VIEWS

● PACKING SECTION

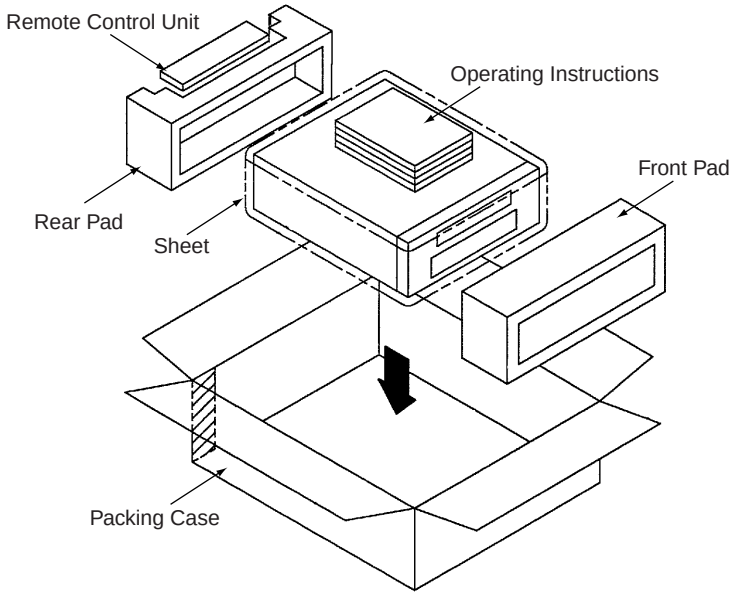

● EXTERIOR SECTION

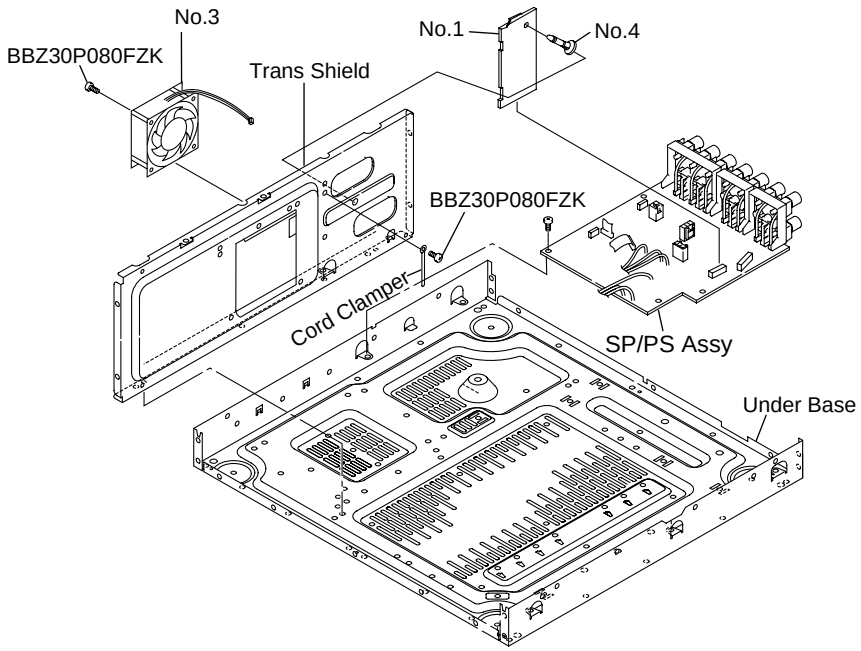

● FRONT PANEL and HEAT SINK SECTIONS

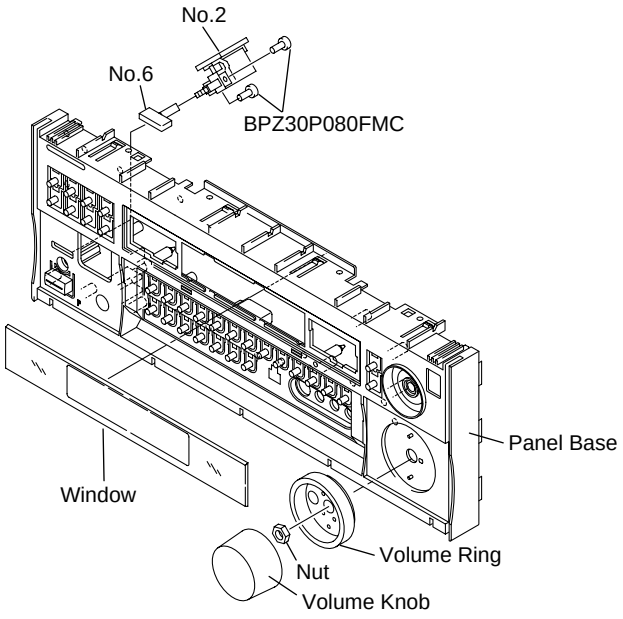

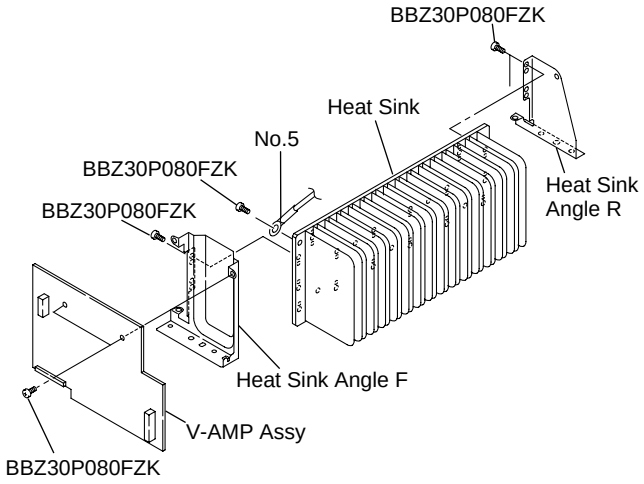

■ CONTRAST OF PCB ASSEMBLIES

AF FM/AM TUNER UNIT

AXQ7232 and AXQ7231 are constructed the same except for the following :

Mark	Symbol and Description	Part No.		Remarks
		AXQ7231	AXQ7232	
	BN201	AKA7003	AKA7002	
	Q601	Not used	2SC2412K	
	Q602	Not used	DTC124EK	
	D101	Not used	UDZS6.8B	
	D601	Not used	HVU187	
	L601	Not used	LCTA270J2520	
	L602	Not used	LAU2R2J	
	F601	Not used	ATF7025	
	C101	CKSRYB103K50	Not used	
	C103, C104, C609	Not used	CKSRYB102K50	
	C206	CCSRCH100D50	CCSRCH120J50	
	C209	CKSRYB223K50	Not used	
	C210	CEJA470M16	CEJQ470M16	
	C211	CEJA1R0M50	CEJQ1R0M50	
	C215	CKSRYB681K50	CKSRYB471K50	
	C216, C217	CKSRYB153K50	CKSRYB103K50	
	C244, C611	Not used	CKSRYB223K50	
	C601, C602	CKSRYB103K50	Not used	
	C603	CKSRYB223K50	CKSRYB392K50	
	C604, C610, C615	Not used	CKSRYB103K50	
	C605	Not used	CCSQCH680J50	
	C606	Not used	CKSRYB561K50	
	C607, C608	Not used	CKSRYB182K50	
	C614	Not used	CCSRCH101J50	
	R101	Not used	RS1/16S0R0J	
	R102, R225, R243	RS1/16S0R0J	Not used	
	R103	RS1/10S331J	RS1/10S221J	
	R104	RS1/10S391J	RS1/10S221J	
	R105, R605	Not used	RS1/16S222J	
	R201	RS1/16S391J	Not used	
	R202	RS1/16S221J	RS1/16S101J	
	R212	RS1/16S392J	RS1/16S512J	
	R216	RS1/16S123J	RS1/16S103J	
	R218, R219	RS1/16S102J	RS1/16S681J	
	R222	RS1/16S472J	RS1/16S103J	
	R227	RS1/16S103J	RS1/16S183J	
	R601	Not used	RS1/16S561J	
	R602, R604	Not used	RS1/16S221J	
	R603	Not used	RS1/16S472J	
	R606	Not used	RS1/16S121J	
	R607	Not used	RS1/16S473J	
	0001 FM FRONT END	AXF7003	AXF7005	
	0002 MW RF TUNING BLOCK	AXX7071	AXX7072	

BF 5.1CH I/O ASSY

AWX7627 and AWX7568 are constructed the same except for the following :

Mark	Symbol and Description	Part No.		Remarks
		AWX7568	AWX7627	
	IC1104	UPC4570G2	Not used	
	Q1157, Q1158	HN1C03F	Not used	
	C1101–C1106, C1117–C1122, C1161–C1165	Not used	CCSQCH101J50	
	C1115, C1116	CEAT4R7M50	Not used	
	C1131, C1132	CEAT100M50	Not used	
	C1139, C1140	CKSQYB103K50	Not used	
	C1151–C1156	Not used	CCSQCH331J50	
	C1166	Not used	CCSQCH471J50	
	R1107, R1108	RS1/10S331J	Not used	
	R1115, R1116	RS1/10S104J	Not used	
	R1125, R1126	RS1/10S474J	Not used	
	R1157, R1158	RS1/10S271J	Not used	
	R1165, R1166	RS1/10S121J	Not used	
	R1173, R1174	RS1/10S101J	Not used	
	R1181, R1182, R1189, R1190	RS1/10S103J	Not used	
	JA1113, JA1163	AKB7046	Not used	

CF INPUT ASSY

AWX7600 and AWX7573 are constructed the same except for the following :

Mark	Symbol and Description	Part No.		Remarks
		AWX7573	AWX7600	
	Q1001, Q1002	2SC2878	Not used	
	D1051	1SS133	Not used	
	C1001–C10012	Not used	CCCSL221J50	
	C1051	CGCYX103M16	Not used	
	R1013– R1016	RD1/4PU102J	Not used	
	R1017, R1018	RD1/4PU473J	Not used	
	R1051	RD1/4PU102J	Not used	
	CN1002	KP200TA6L	Not used	
	JA1004	AKB7046	Not used	
	JA1051	AKN7014	Not used	

G S VIDEO ASSY

AWX7616 and AWX74580 are constructed the same except for the following :

Mark	Symbol and Description	Part No.		Remarks
		AWX7580	AWX7616	
	IC852	BU4053BCF	Not used	
	C854	CCSQCH151J50	Not used	
	C855, C856	CKSQYB103K50	Not used	
	R855	RS1/10S103J	Not used	
	R868, R869,R870	RS1/10S102J	Not used	
	R883, R885	Not used	RS1/10S0R0J	*
	R884	RS1/10S0R0J	Not used	

Note * : These parts are used for VSX-33TX/KUXJI/CA. Refer to service manual RRV2351.

DF MAIN CONTROL ASSY

AWX7625 and AWX7560 are constructed the same except for the following :

Mark	Symbol and Description	Part No.		Remarks
		AWX7560	AWX7625	
	IC101	M5220FP	Not used	
	IC103	TC9164AF	Not used	
	IC104	NJM4558MD	Not used	
	IC251	Not used	NJM4558MD	
	Q905	DTA124EK	Not used	
	D251, D252	Not used	1SS355	
	D253	Not used	UDZS5.1B	
	C101– C110	Not used	CCSQCH221J50	
	C113, C114	CEAT100M50	Not used	
	C115, C116	CCSQCH181J50	Not used	
	C117, C118	CEAT470M25	Not used	
	C121, C122	CQMA822J50	Not used	
	C123, C124	CQMA242L50	Not used	
	C125, C126	CEAT2R2M50	Not used	
	C127, C128	CEJQ101M25	Not used	
	C133, C134, C911	CKSRYB103K50	Not used	
	C135, C136	CEAT1R0M50	Not used	
	C145, C146, C169, C170, C181, C182	Not used	CCSRCH101J50	
	C157, C158	Not used	CCSQCH101J50	
	C191– C193	CCSRCH101J50	Not used	
	C252	Not used	CEAT470M25	
	C253– C256	Not used	CKSRYB103K50	
	C291	CEJA101M16	CEJQ101M16	
	R111, R112	RS1/10S0R0J	Not used	
	R113, R114, R117, R118, R129, R130	RS1/10S104J	Not used	
	R139, R140, R203, R204	RS1/10S104J	Not uesd	
	R115, R116	RS1/10S331J	Not used	
	R119, R120	RS1/10S511J	Not used	
	R121, R122	RS1/10S394J	Not used	
	R123, R124	RS1/10S303J	Not used	
	R125, R126, R133, R134	RS1/10S471J	Not used	
	R131, R132	RS1/16S474J	Not used	
	R135, R136, R934, R944, R945, R946	RS1/16S102J	Not used	
	R990, R991	RS1/10S102J	Not used	
	R933	RS1/16S473J	Not used	
	R211– R215, R252, R253	Not used	RS1/16S104J	
	R251	Not used	RS1/16S474J	
	R254	Not used	RS1/16S102J	
	R255	Not used	RS1/16S393J	
	R295	Not used	RS1/10S0R0J	
	R921	Not used	RS1/16S103J	
	CN0103	AKP7057	Not used	
	CN0906	52045-0445	Not used	
	JA151	VKB1060	Not used	

E A-CONNECTION ASSY

AWX7619 and AWX7566 are constructed the same except for the following :

Mark	Symbol and Description	Part No.		Remarks
		AWX7566	AWX7619	
	IC1501	TC9215AF	Not used	
	IC1502	TC9459F	Not used	
	IC1503	NJM4558MD	Not used	
	IC1551	M62429FP	Not used	
	D1551	UDZS5.1B	Not used	
	C1501- C1504, C1517, C1518	CKSQYB103K50	Not used	
	C1507, C1508, C1515, C1516, C1551–C1553	CEAT100M50	Not used	
	C1511, C1512	CCSQCH560J50	Not used	
	C1541– C1543, C1554, C1555	CCSQCH101J50	Not used	
	C1556, C1557	CEAT1R0M50	Not used	
	R1503, R1504, R1511, R1512	RS1/10S104J	Not used	
	R1505, R1506	RS1/10S103J	Not used	
	R1507, R1508	RS1/10S472J	Not used	
	R1509, R1510	RS1/10S152J	Not used	
	R1541– R1545, R1552, R1553	RS1/10S102J	Not used	
	R1551	RS3LMF391J	Not used	
	R1554, R1555	RS1/10S103J	Not used	
	R1569, R1570, R1571, R1572, R1573, R1574	RD1/10S0R0J	Not used	
	CN1552	AKP7068	Not used	
	CN1554	KM200TA6	Not used	

F COMPOSITE ASSY

AWX7617 and AWX7581 are constructed the same except for the following :

Mark	Symbol and Description	Part No.		Remarks
		AWX7581	AWX7617	
	IC731	NJM2279	Not used	
	IC751	TC4W53FU	Not used	
	Q701	2SA933S	Not used	
	D731	DAN202K	Not used	
	C707	CCSQCH181J50	Not used	
	C712, C713, C734, C735	CEAT101M10	Not used	
	C714, C732, C733, C736, C785, C786	CKSQYB473K50	Not used	
	C715	CCSQCH150J50	Not used	
	C737	CCSQCH470J50	Not used	
	R707	RS1/10S750J	Not used	
	R712	RS1/10S183J	Not used	
	R713	RS1/10S103J	Not used	
	R714	RS1/10S101J	Not used	
	R715	RD1/2VM201J	Not used	
	R733– R735, R766	RS1/10S102J	Not used	
	R767	RS1/10S104J	Not used	
	JA703 2P PIN JACK	Not used	VKB1048	*
	703 2P PIN JACK	AKB7017	Not used	

Note * : These parts are used for VSX-33TX/KUXJI/CA. Refer to service manual RRV2351.

H V-CONNECTION ASSY

AWX7717 and AWX7567 are constructed the same except for the following :

Mark	Symbol and Description	Part No.		Remarks
		AWX7567	AWX7717	
	Q601	KRC103M	Not used	
	C601	CKSQYB103K50	Not used	
	R601	RS1/10S103J	Not used	
	CN604	KM200TA10	Not used	

IF V-AMP ASSY

AWX7723 and AWX7578 are constructed the same except for the following :

Mark	Symbol and Description	Part No.		Remarks
		AWX7578	AWX7723	
	CN2201 3P CONNECTOR	Not used	KM250MA3	

LF SP / PS ASSY

AWX7735 and AWX7571 are constructed the same except for the following :

Mark	Symbol and Description	Part No.		Remarks
		AWX7571	AWX7735	
	D3001, D3002	D5SBA20	D5SBA20(B)	
	D3052, D3054, D3056, D3058, D3059	Not used	1SS133	
	D3201	Not used	MTZJ5.1B	
	C3001, C3002 (22000µF/56V)	ACH7147	ACH7145	
	C3101- C3105	CFTYA104J50	CFTYA224J50	
	C3106- C3110	Not used	CFTYA224J50	
	C3111- C3117	CQHA102J2A	CQHA332K2E	
	C3119	Not used	CKPUYB221K50	
	L3111, L3112	ATX1012	Not used	
	R3111	Not used	RD1/4PU4R7J	
	R3133, R3134	Not used	RS1LMF471J	
	Heat Sink	ANH1021	Not used	
	CN3002 6P PLUG	Not used	KM200TA6	
	CN3101	AKE7058	AKE7059	
	CN3102	AKE7060	AKE7061	

OF TRANS 2-2 ASSY

AWX7720 and AWX7565 are constructed the same except for the following :

Mark	Symbol and Description	Part No.		Remarks
		AWX7565	AWX7720	
	C5501	CQMA224J50	Not used	
	C5502	CQMA224J50	Not used	
	R5501	RD1/4MUF100J	Not used	

QF PRIMARY ASSY

AWX7596, AWX7604 and AWX7563 are constructed the same except for the following:

Mark	Symbol and Description	Part No.			Remarks
		AWX7563	AWX7596	AWX7604	
	C6011, C6012, C6013	Not used	CCCSL101K2H	CCCSL101K2H	
	R6001	RCN1080	Not used	Not used	
	J0032	Not used	D20PYY0330E	D20PYY0330E	
	T6001	ATT7043	ATT7040	ATT7040	
	6004	AKP7136	AKP7135	Not used	
	6001 3P CONNECTOR	Not used	51048-0300	51048-0300	

SF DISPLAY ASSY

AWX7601 and AWX7574 are constructed the same except for the following :

Mark	Symbol and Description	Part No.		Remarks
		AWX7574	AWX7601	
	IC7051	TC7W53FU	Not used	
	IC7401	Not used	BU1923	
	Q7053	FMA1A	Not used	
	Q7054	DTC124EK	Not used	
	Q7401	Not used	2SA1037	
	Q7402	Not used	DTC143ES	
	Q7403	Not used	2SC2412K	
	D7054– D7057	1SS355	Not used	
	L7401	Not used	LFA2R2J	
	C7053	CKSQYB153K50	Not used	
	C7401	Not used	CKSQYB472K50	
	C7402	Not used	CEAT2R2M50	
	C7403, C7404	Not used	CKSQYB102K50	
	C7405	Not used	CEAT101M10	
	C7406, C7407	Not used	CCSQCH270J50	
	C7408	Not used	CKSQYB561K50	
	C7409	Not used	CEAT1R0M50	
	R7047	RS1/10S223J	RS1/10S103J	
	R7056	RS1/10S223J	Not used	
	R7057	RS1/10S392J	Not used	
	R7058, R7061	RS1/10S103J	Not used	
	R7401, R7407, R7408	Not used	RS1/10S102J	
	R7403	Not used	RS1/10S222J	
	R7404	Not used	RS1/10S473J	
	R7405	Not used	RS1/10S333J	
	R7406	Not used	RS1/10S104J	
	CN7007	52045-0445	Not used	
	X7401 CRYSTAL RESONATOR (4.332MHz)	Not used	ASS7004	

YF DSP ASSY

AWX7626 and AWX7561 are constructed the same except for the following :

Mark	Symbol and Description	Part No.		Remarks
		AWX7561	AWX7626	
	IC9103	CS4391	Not used	
	IC9602– IC9604, IC9701– IC9705	UPC4570G2	NJM4558MD	
	IC9706, IC9707	UPC4570G2	Not used	
	Q9611, Q9612	2SC3326(AB)	Not used	
	C9102, C9108, C9151, C9152, C9162	CEJA470M16	CEJQ470M16	
	C9110	CEJAR47M50	CEJQR470M50	
	C9117, C9562	CEJA470M16	CEJQ470M16	
	C9120	CEJA470M16	Not used	
	C9121, C9124	CKSRYB103K50	Not used	
	C9122	CCSRCH471J50	Not used	
	C9123, C9125	CEJA1R0M50	Not used	
	C9126	CKSRYB104K16	Not used	
	C9127, C9529	CEJA2R2M50	CEJQ2R2M50	
	C9167	CKSQYF104Z50	Not used	
	C9203– C9207, C9603, C9604, C9615, C9616	CEJA4R7M50	CEJQ4R7M50	
	C9627, C9628, C9811, C9813	CEJA4R7M50	CEJQ4R7M50	
	C9551, C9740, C9801, C9802, C9812	CEJA101M10	CEJQ101M10	
	C9814, C9501, C9516	CEJA101M10	CEJQ101M10	
	C9643, C9644, C9770, C9523, C9526	CEJA100M25	CEJQ100M25	
	C9705, C9706, C9759, C9760	CKSQYF104Z25	Not used	
	C9713, C9714, C9727, C9728, C9739	CEJA330M10	CEJQ330M10	
	C9765– C9769	CEJA330M10	CEJQ330M10	
	C9745, C9746, C9781, C9782	CKSRYB102K50	Not used	
	C9749– C9751, C9752	CCSRCH221J50	Not used	
	C9753, C9754	CEJA330M10	Not used	
	C9755, C9756	CKSRYB122K50	Not used	
	C9757, C9758	CCSRCH271J50	Not used	
	C9761, C9762	CEJA4R7M50	Not used	
	C9763, C9764	CKSRYB222K50	Not used	
	C9803, C9805	CEJA470M25	CEJQ470M25	
	L9105, L9106	QTL1013	Not used	
	R9106	RS1/16S331J	RS1/16S101J	
	R9120, R9122	RS1/10S681J	Not used	
	R9121, R9749, R9750	RS1/10S562J	Not uesd	
	R9123, R116	RS1/10S182J	Not used	
	R9154	RS1/10S104J	RS1/10S0R0J	
	R9173	RS1/10S0R0J	Not used	
	R9577	RS1/16S331J	Not used	
	R9590	RS1/16S0R0J	RS1/16S331J	
	R9737– R9742, R9753, R9754, R9763, R9764	RS1/16S153J	Not used	
	R9743– R9746, R9755, R9756	RS1/16S332J	Not used	
	R9747, R9748	RS1/16S122J	Not used	
	R9751, R9752	RS1/16S822J	Not used	
	R9757, R9758	RS1/16S474J	Not used	
	R9759, R9760	RS1/16S101J	Not used	
	CN9804	S5B-PH-K-S	Not used	
	JA9156	GP1FA551TZ	Not used	

■ PCB PARTS LIST

Mark	No.	Description	Part No.
QA		**P-SW ASSY (AWX7593)**	
		SWITCHES AND RELAYS	
	S6801		ASG1035
		CAPACITORS	
	C6801, C6802		CGCYX103K25
		OTHERS	
	CN6801	3P JUMPER CONNECTOR	52151-0310
Z		**FAN DRIVER ASSY (AWX7599)**	
		SEMICONDUCTORS	
⚠	IC3501 (1.25A)		AEK7010
	Q3501		KRA103M
	Q3502		KRC103M
	Q3503		2SC4793
	D3504		MTZJ12C
	D3503		MTZJ27D
⚠	D3501, D3502		S5688G
		CAPACITORS	
	C3501		CEAT471M35
	C3502		CEAT1R0M50
	C3503		CKCYF103Z50
	C3504		CEANP471M25
	C3505		CEAT100M50
		RESISTORS	
	Other Resistors		RD1/4PU□□□J
		OTHERS	
	CN3502	3P PLUG	KM250MA3L
	CN3501	6P SOCKET	KP200TA6L

2. PCB CONNECTION DIAGRAM

2.1 P- SW and FAN DRIVER ASSYS

QA P-SW ASSY

Z FAN DRIVER ASSY

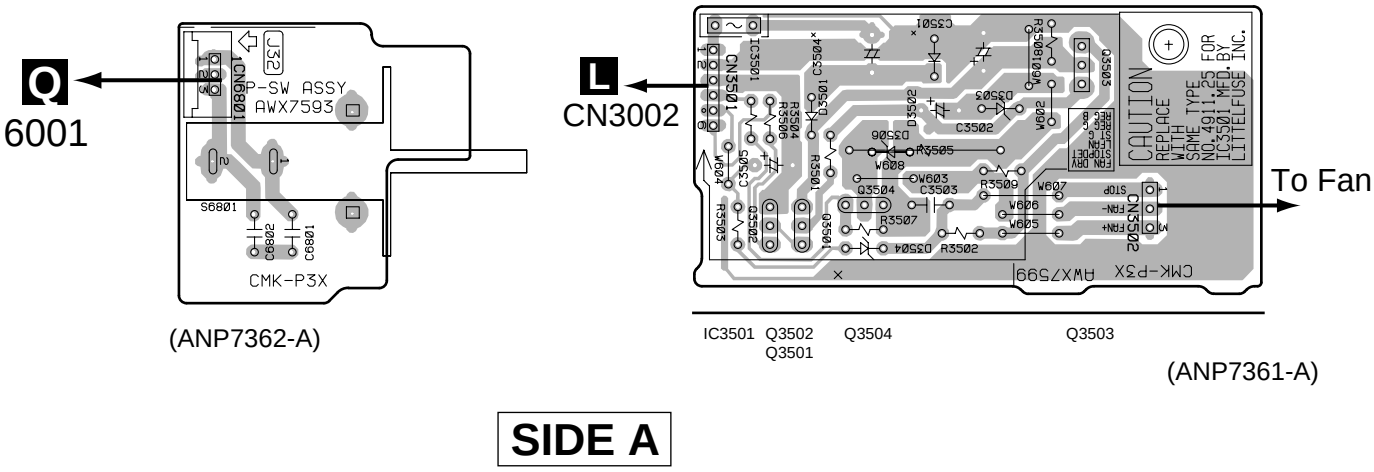

(ANP7362-A)

(ANP7361-A)

SIDE A

2.2 TRANS 2-1, TRANS 2-2 and TRANS 1 ASSYS

● Line Voltage Selection

Line Voltage can be changed by the following modification:

1. Disconnect the AC power cord.
2. Remove the cover.
3. Change the connection wire from TRANS 1 ASSY (Terminal No. Y6002) to AMP ASSY (Terminal No. Y6002) as follows.

Voltage	Terminal No. of TRANS 1 ASSY
220-230V	Y6002/HY/HL/HV
240V	Y6002/J,/KU

4. Stick a line voltage label on the rear panel.

Description	Part No.
220V label	AAX-193
240V label	AAX-192

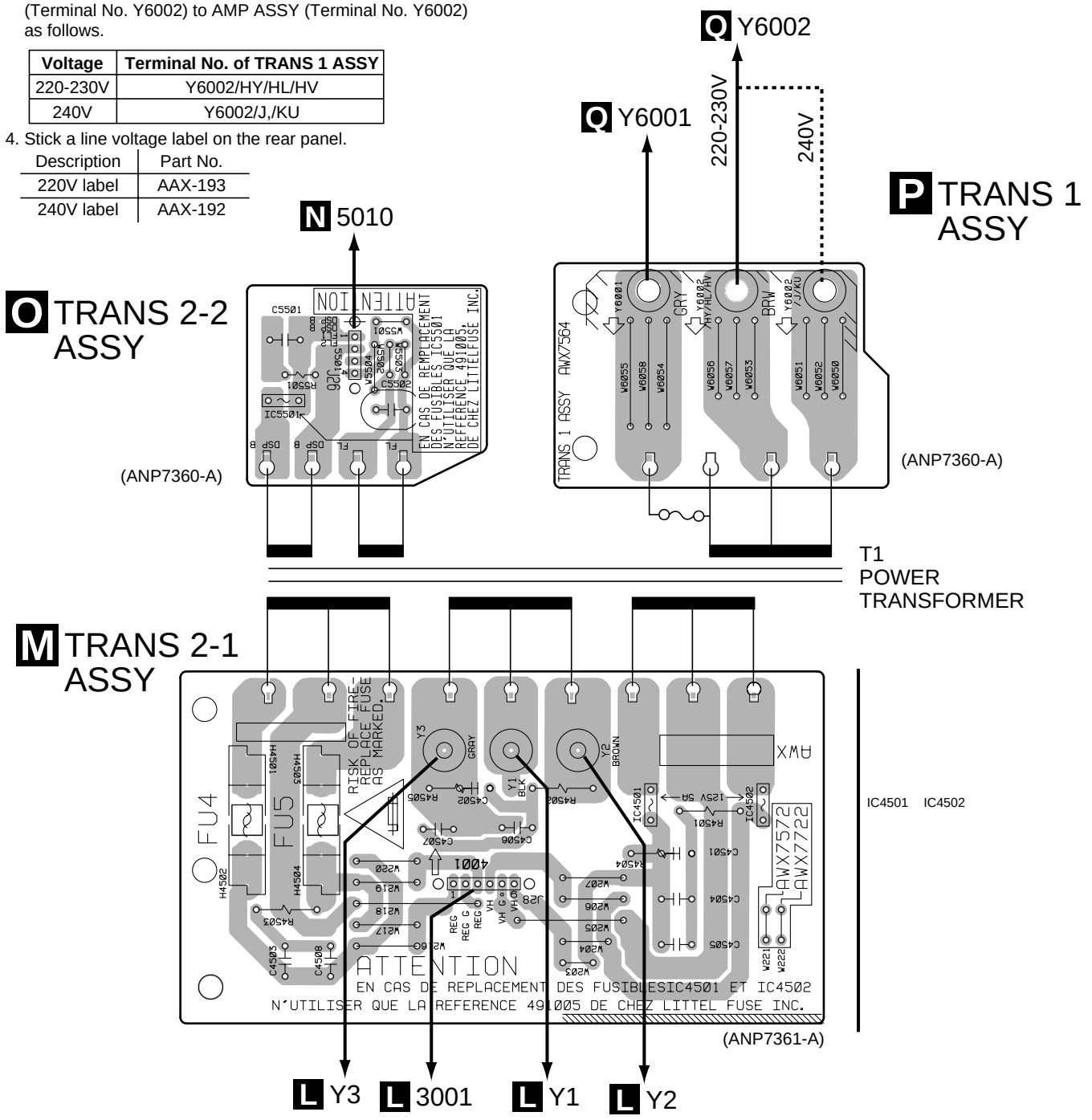

3. SCHEMATIC DIAGRAM

3.1 FM/AM TUNER UNIT

AF FM/AM TUNER UNIT (AXQ7232)

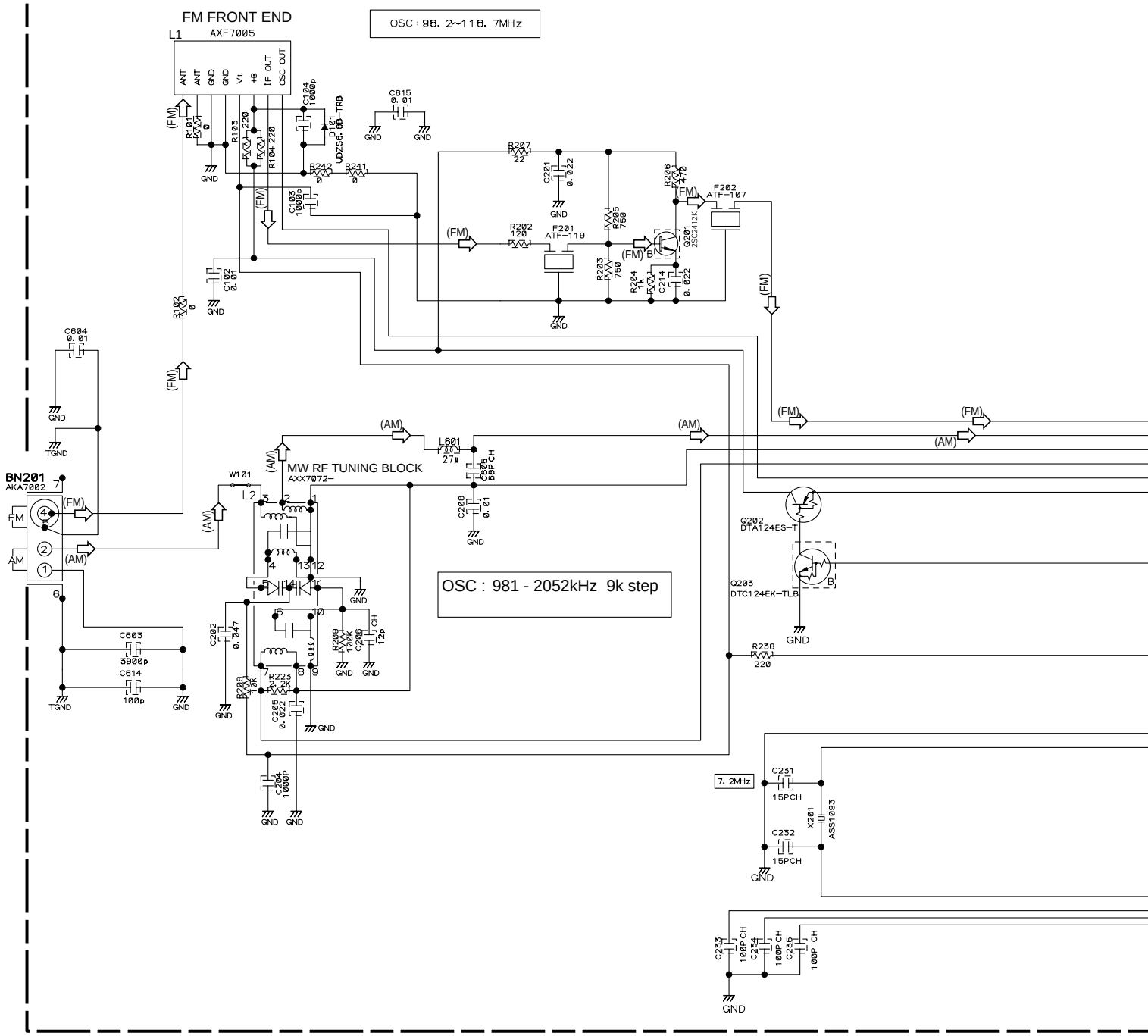

Notes

1. RESISTORS
   Indicated in Ω, 1/16W±5% Tolerance unless otherwise noted K:KΩ, M:MΩ.
2. CAPACITORS
   Indicated in Capacity(μF)/VOLTAGE(V) unless otherwise noted P:PF.
3. DIODES
   No mark diode is 1SS133.

: The power supply is shown with the marked box.

(TX) : AUDIO SIGNAL ROUTE (TUNER)
(AM) : AM SIGNAL ROUTE
(FM) : FM SIGNAL ROUTE

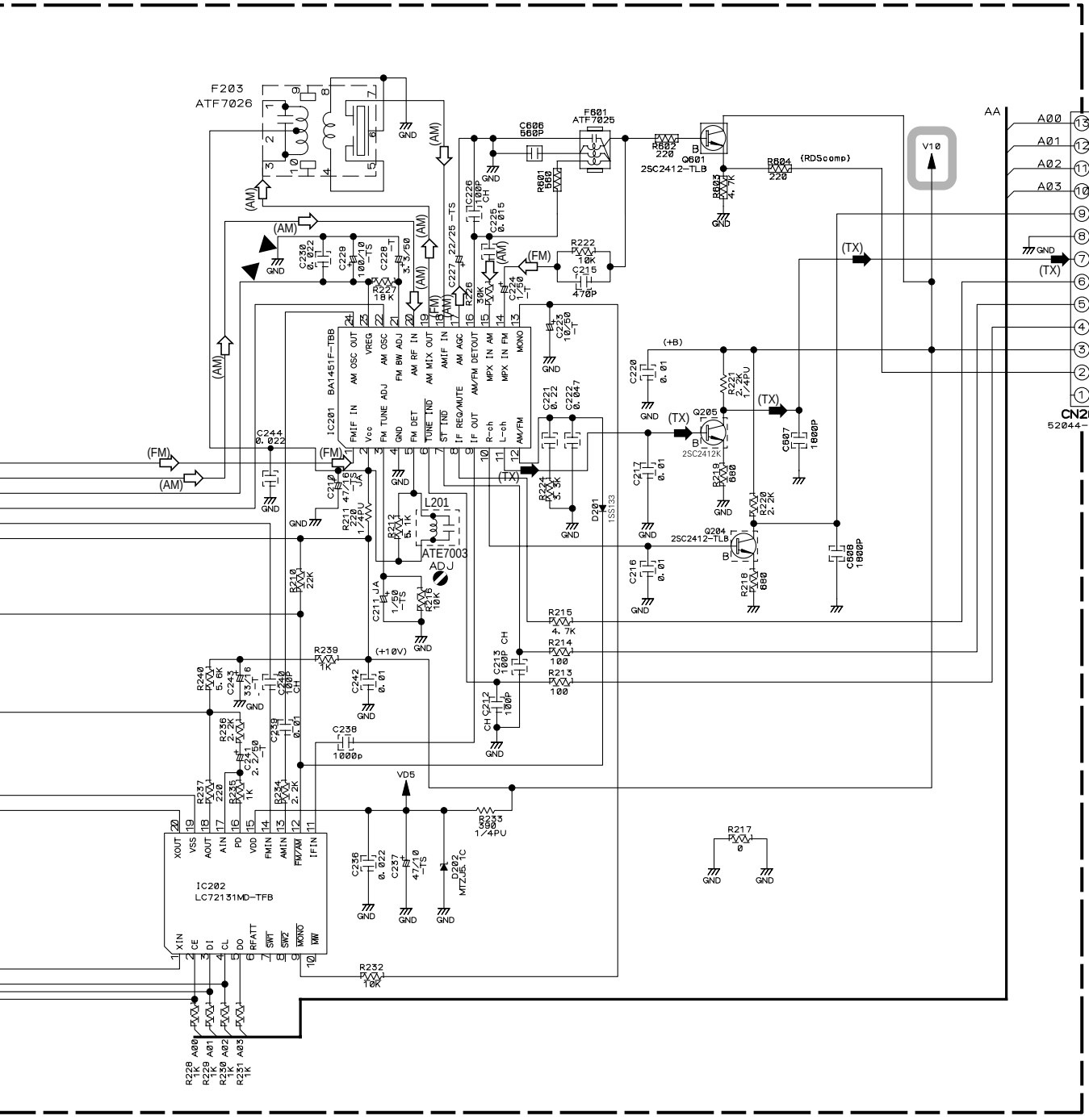

3.2 5.1CH I/O and INPUT ASSYS

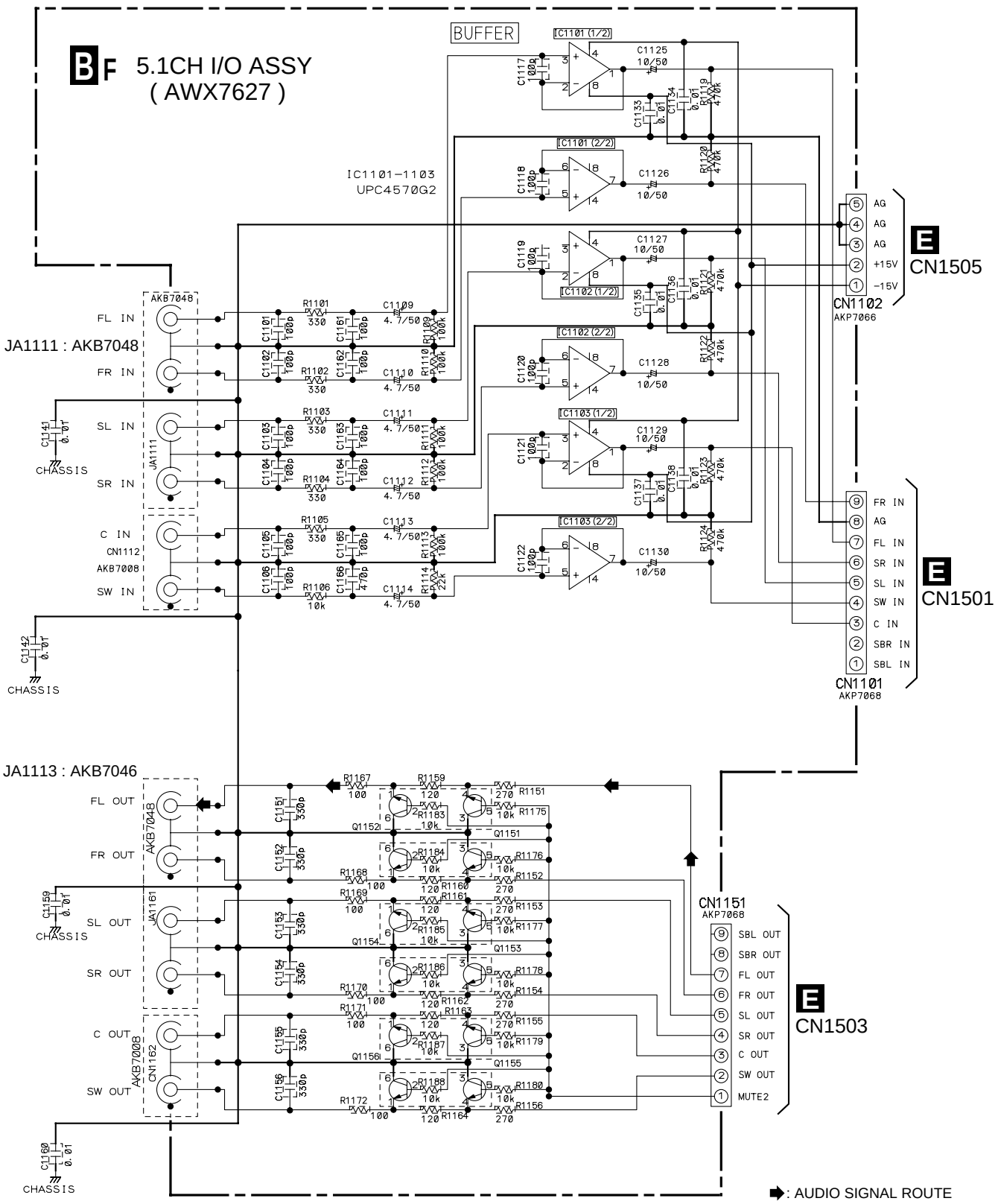

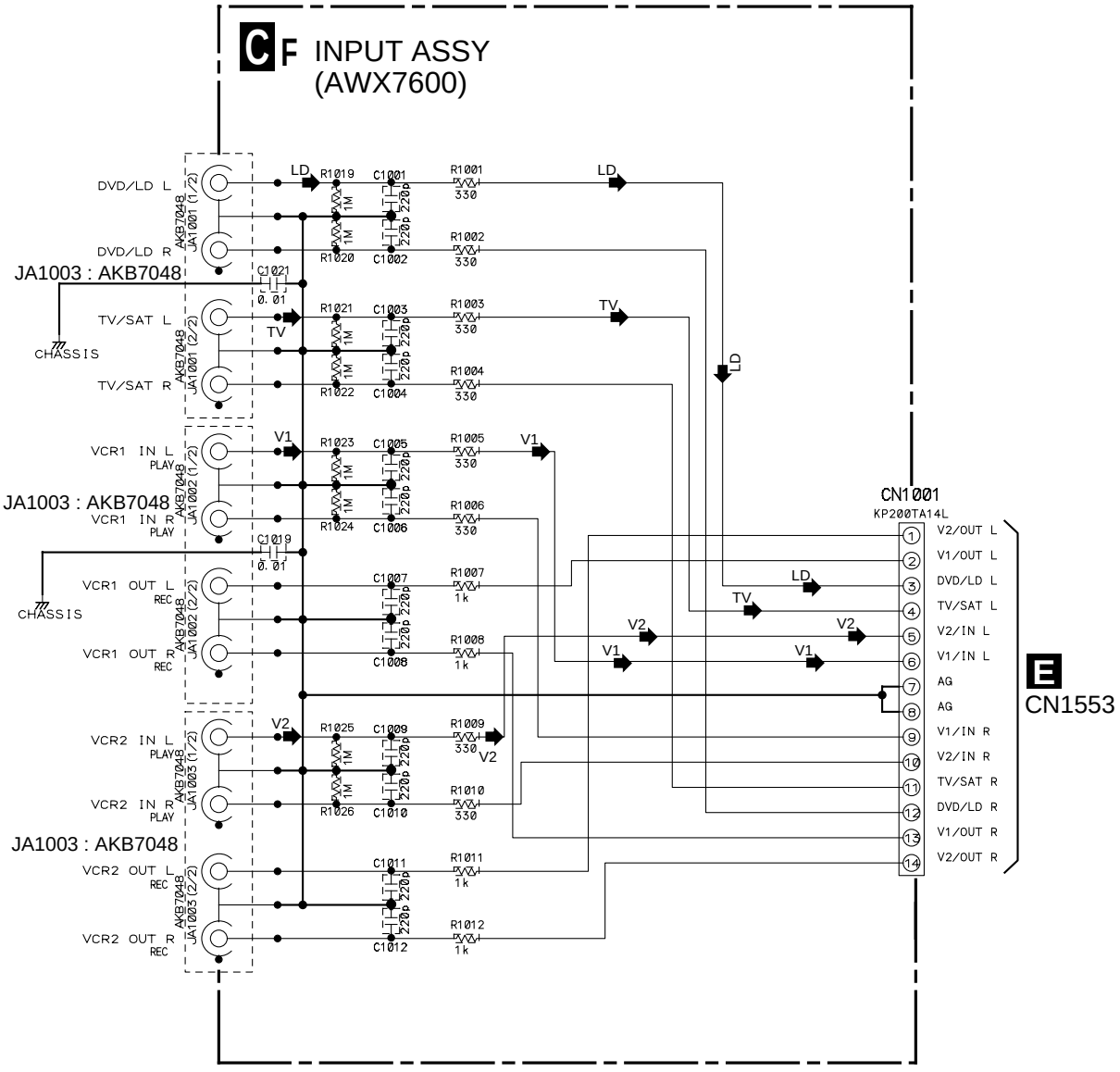

: AUDIO SIGNAL ROUTE
LD : AUDIO SIGNAL ROUTE (LD)
TV : AUDIO SIGNAL ROUTE (TV)
V1 : AUDIO SIGNAL ROUTE (VCR1)
V2 : AUDIO SIGNAL ROUTE (VCR2)
MR : AUDIO SIGNAL ROUTE (MR)

3.2 MAIN CONTROL ASSY (1/3)

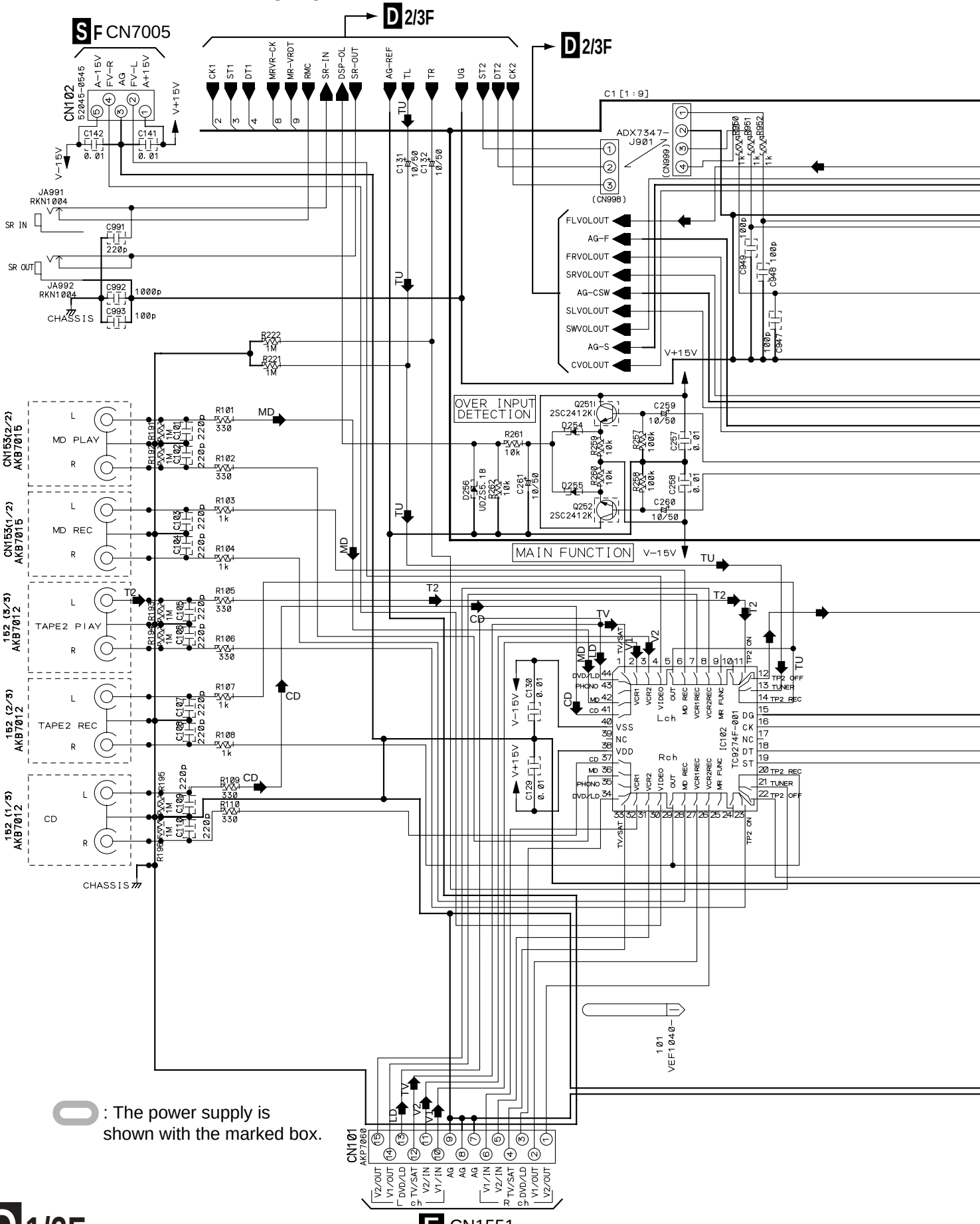

D 1/3 F MAIN CONTROL ASSY (AWX7625)

: AUDIO SIGNAL ROUTE
LD : AUDIO SIGNAL ROUTE (LD)
TV : AUDIO SIGNAL ROUTE (TV)
V1 : AUDIO SIGNAL ROUTE (VCR1)
V2 : AUDIO SIGNAL ROUTE (VCR2)
MD : AUDIO SIGNAL ROUTE (MD)
P : AUDIO SIGNAL ROUTE (PHONO)
TU : AUDIO SIGNAL ROUTE (TUNER)
CD : AUDIO SIGNAL ROUTE (CD)
T2 : AUDIO SIGNAL ROUTE (TAPE2)
MR : AUDIO SIGNAL ROUTE (MR)

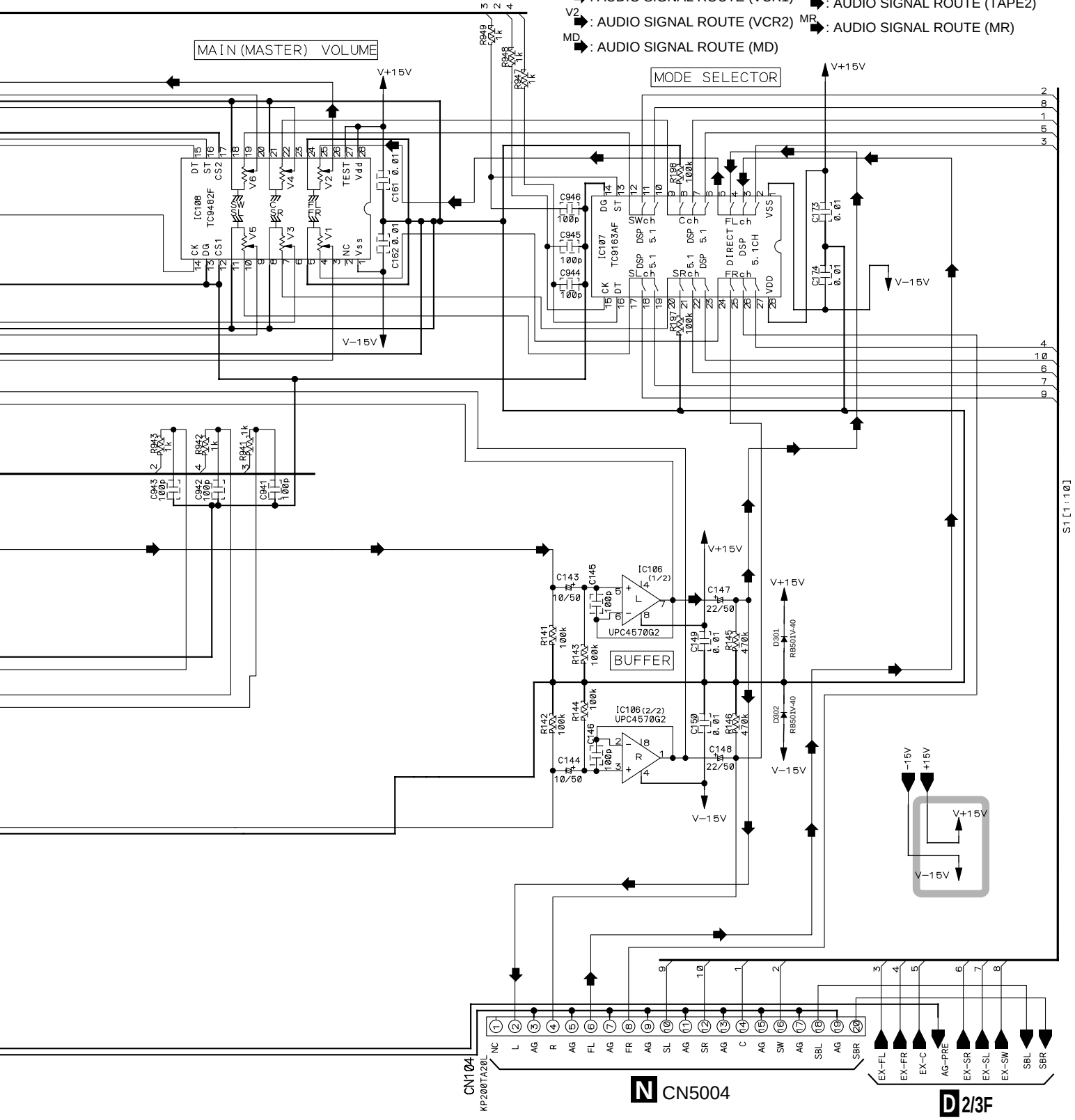

3.3 MAIN CONTROL ASSY (2/3)

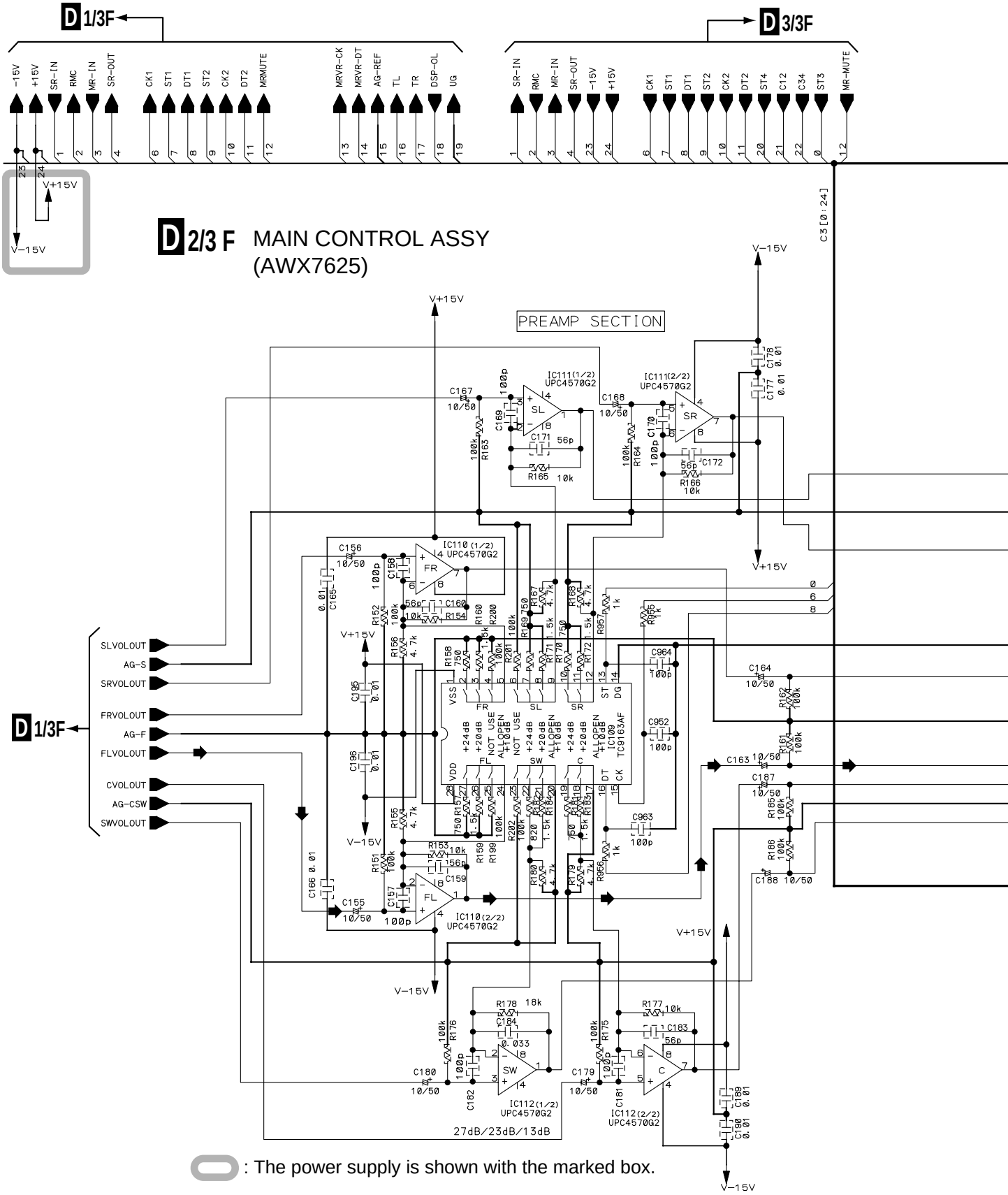

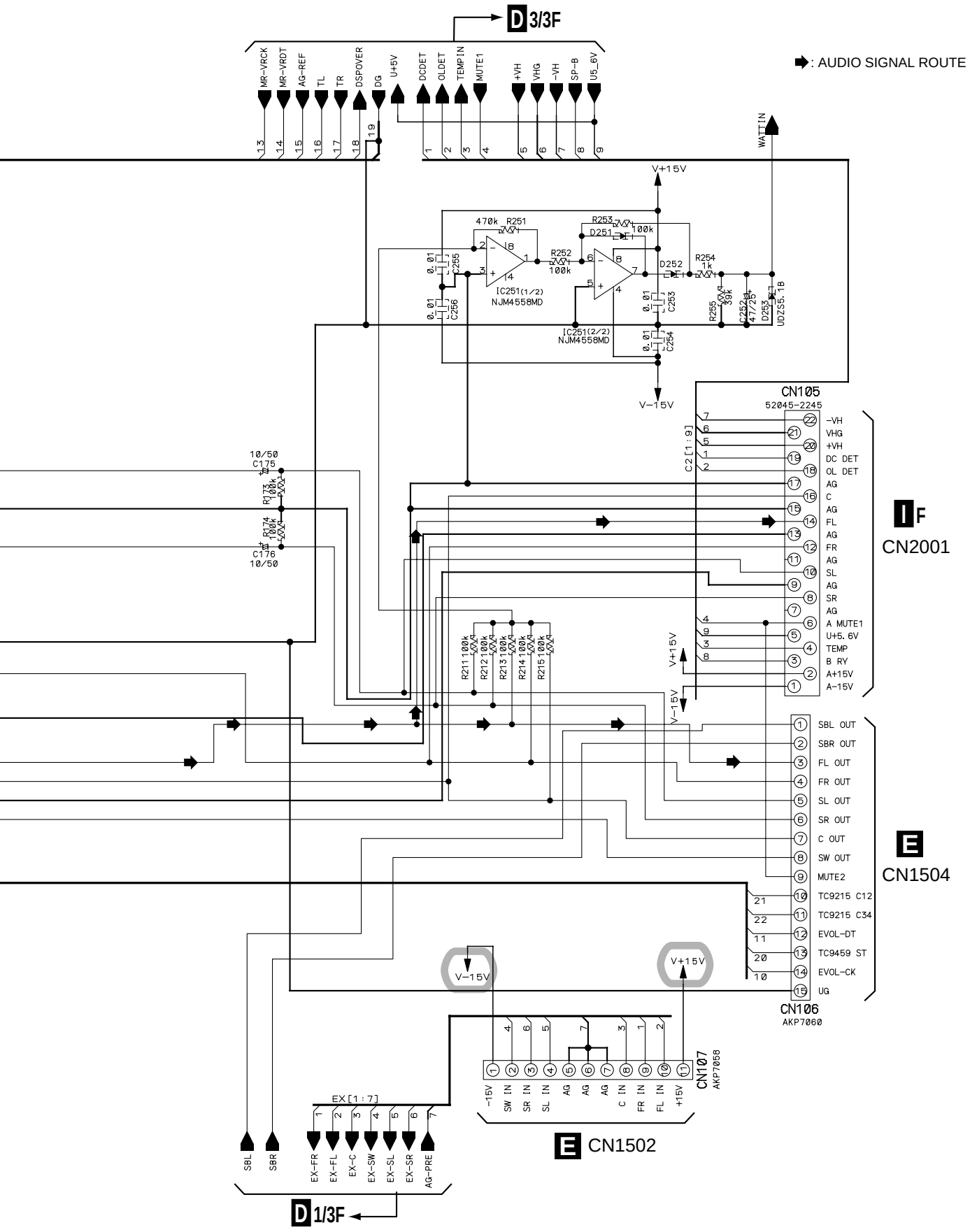
D 3/3F
: AUDIO SIGNAL ROUTE
MR-VRCK
MR-VRDT
AG-REF
TL
TR
DSPOVER
DG
U+5V
DCDET
OLDET
TEMP IN
MUTE1
+VH
VHG
−VH
SP−B
U5_6V
WAT IN
V+15V
V−15V
470k R251
R253 100k
D251
R252 100k
D252
R254 1k
[C251(1/2)
NJM4558MD
[C251(2/2)
NJM4558MD
C255
C256
C253
C254
R255 39k
C252 47/25
D253 UDZS5.1B
CN105
52045-2245
−VH
VHG
+VH
DC DET
OL DET
AG
C
AG
FL
AG
FR
AG
SL
AG
SR
AG
A MUTE1
U+5. 6V
TEMP
B RY
A+15V
A−15V
C2[1:9]
10/50 C175
R173 100k
R174 100k
C176 10/50
R211 100k
R212 100k
R213 100k
R214 100k
R215 100k
IF
CN2001
SBL OUT
SBR OUT
FL OUT
FR OUT
SL OUT
SR OUT
C OUT
SW OUT
MUTE2
TC9215 C12
TC9215 C34
EVOL-DT
TC9459 ST
EVOL-CK
UG
E
CN1504
CN106
AKP7060
CN107
AKP7058
−15V
SW IN
SR IN
SL IN
AG
AG
AG
C IN
FR IN
FL IN
+15V
E CN1502
EX[1:7]
SBL
SBR
EX-FR
EX-FL
EX-C
EX-SW
EX-SL
EX-SR
AG-PRE
D 1/3F

3.4 MAIN CONTROL ASSY (3/3)

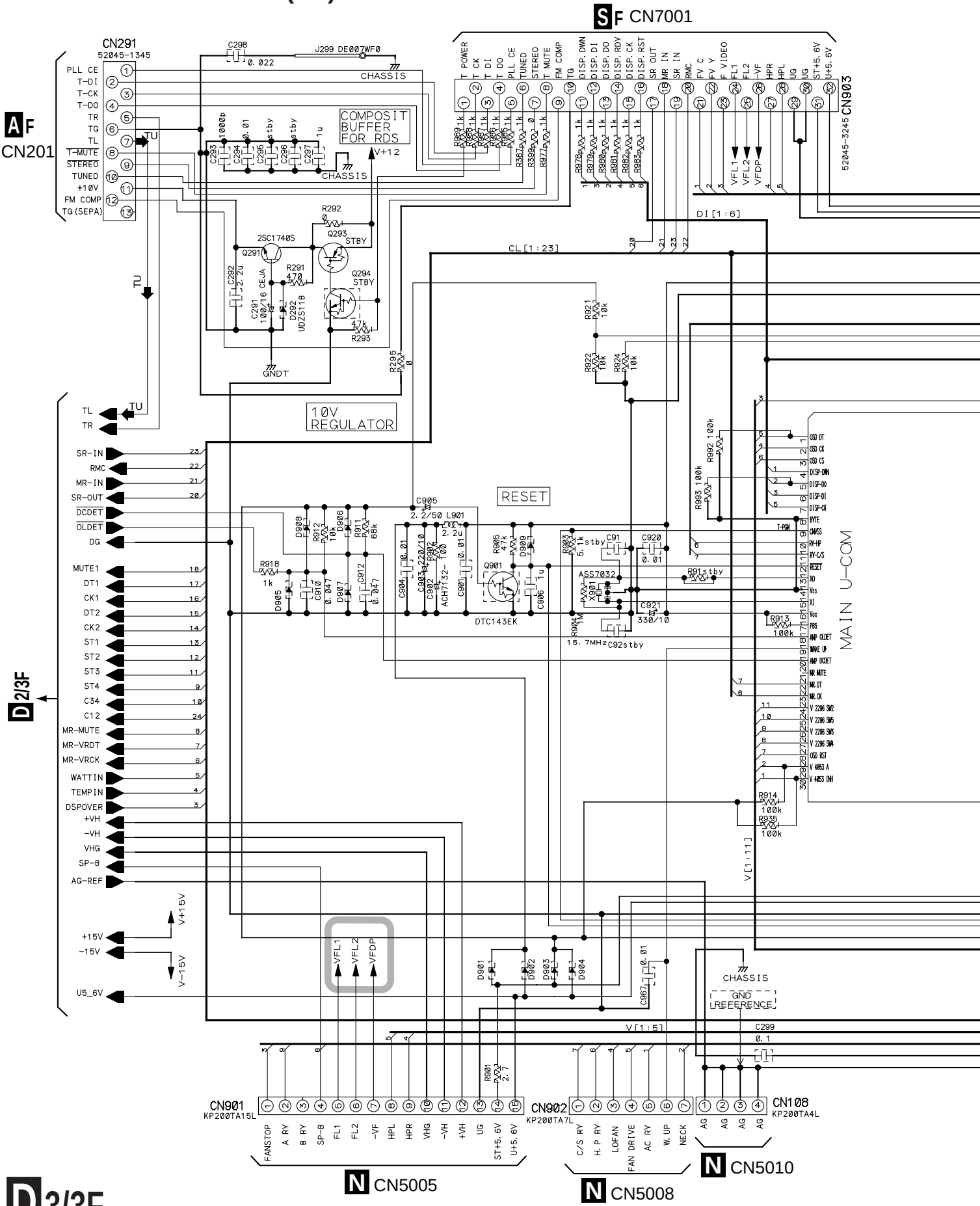

D 3/3 F MAIN CONTROL ASSY (AWX7625)

TU : AUDIO SIGNAL ROUTE (TUNER)

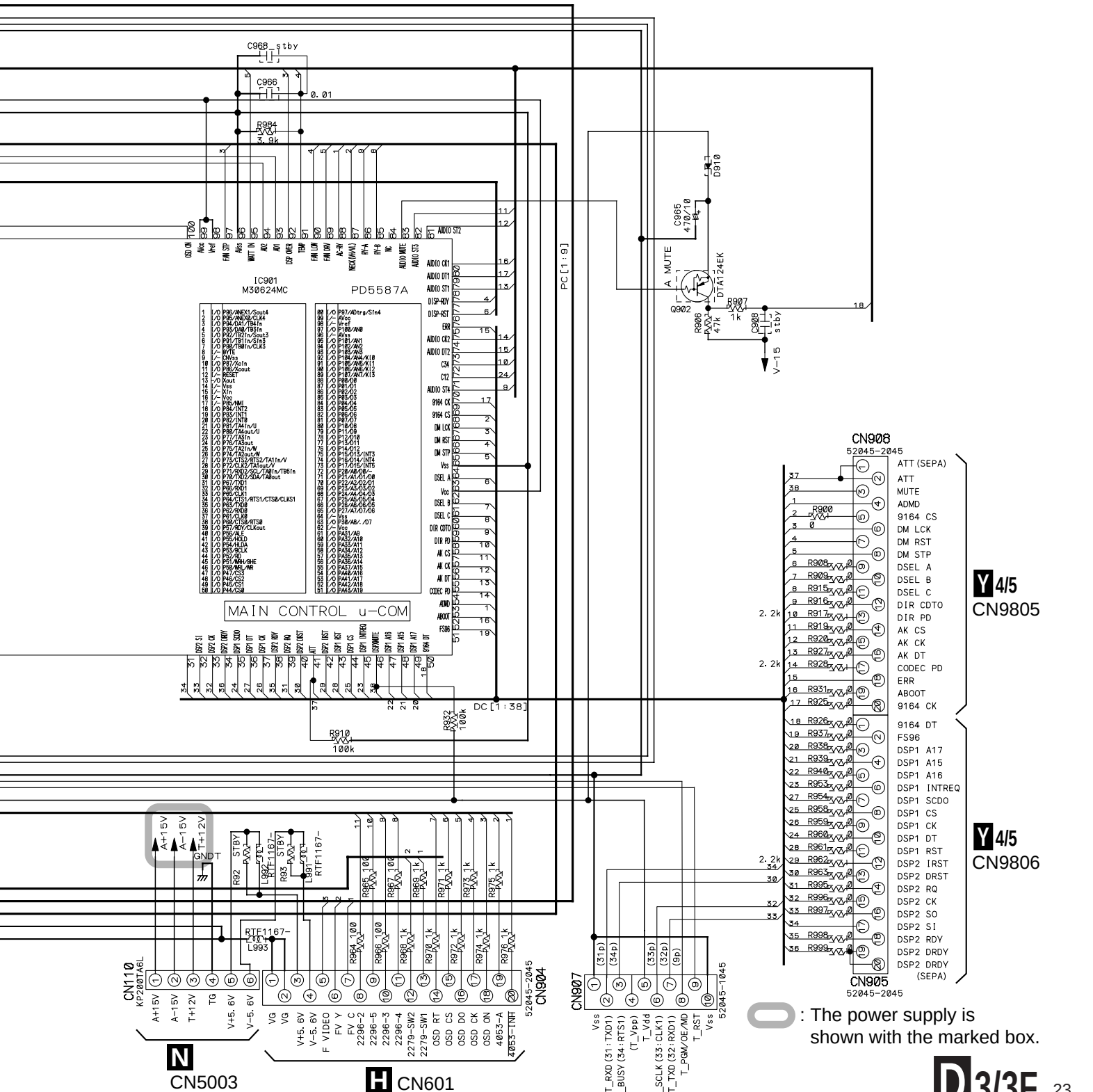

3.5 V-AMP, REGULATOR, TRANS 2-2 and TRANS 1 ASSYS

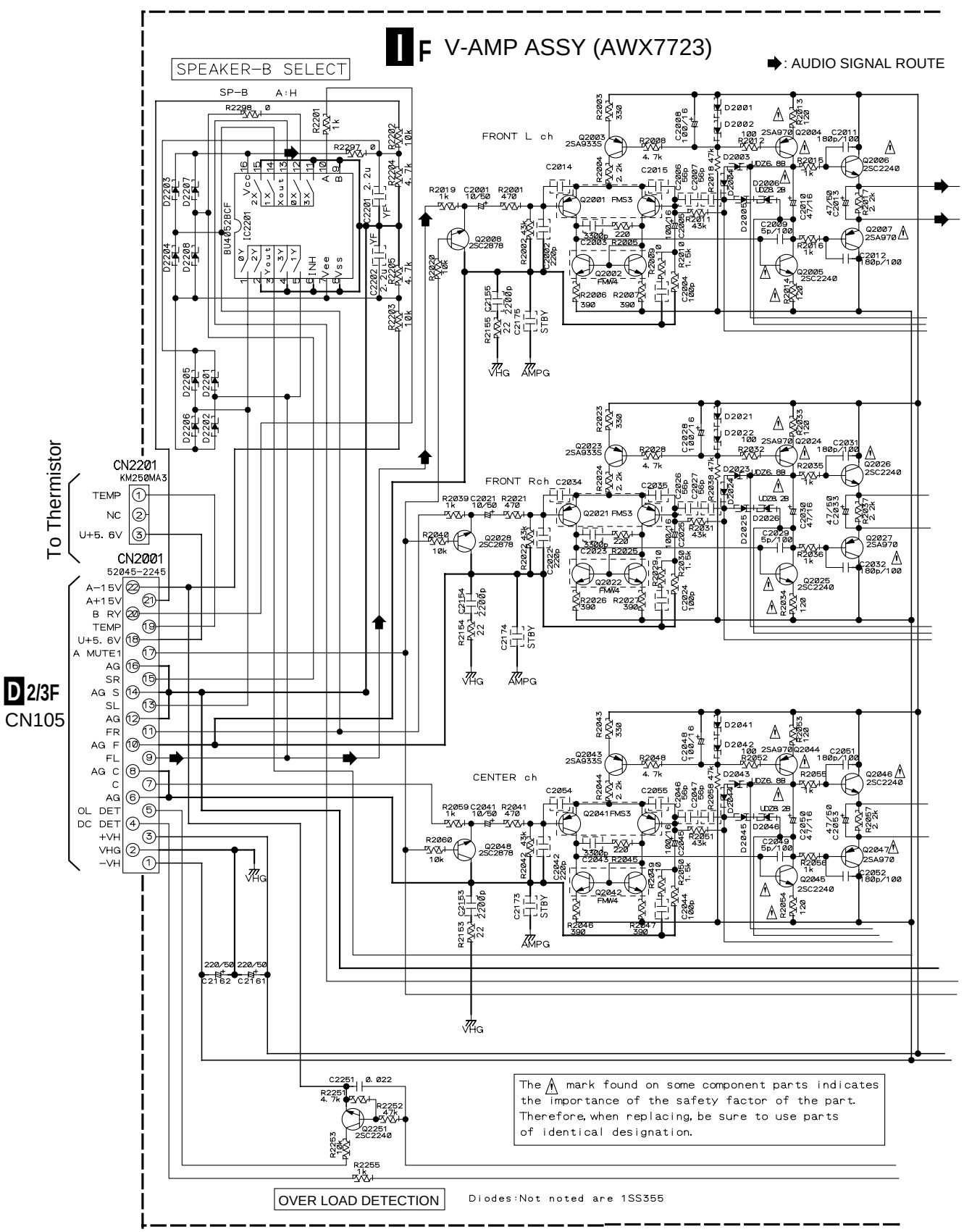

CAUTION : FOR CONTINUED PROTECTION AGAINST RISK OF FIRE. REPLACE ONLY WITH SAME TYPE NO. 491.200 MFD, BY LITTELFUSE INC. FOR IC5009, IC5010 (AEK7023).

CAUTION : FOR CONTINUED PROTECTION AGAINST RISK OF FIRE. REPLACE ONLY WITH SAME TYPE NO. 491005 MFD, BY LITTELFUSE INC. FOR IC5501 (AEK7019).

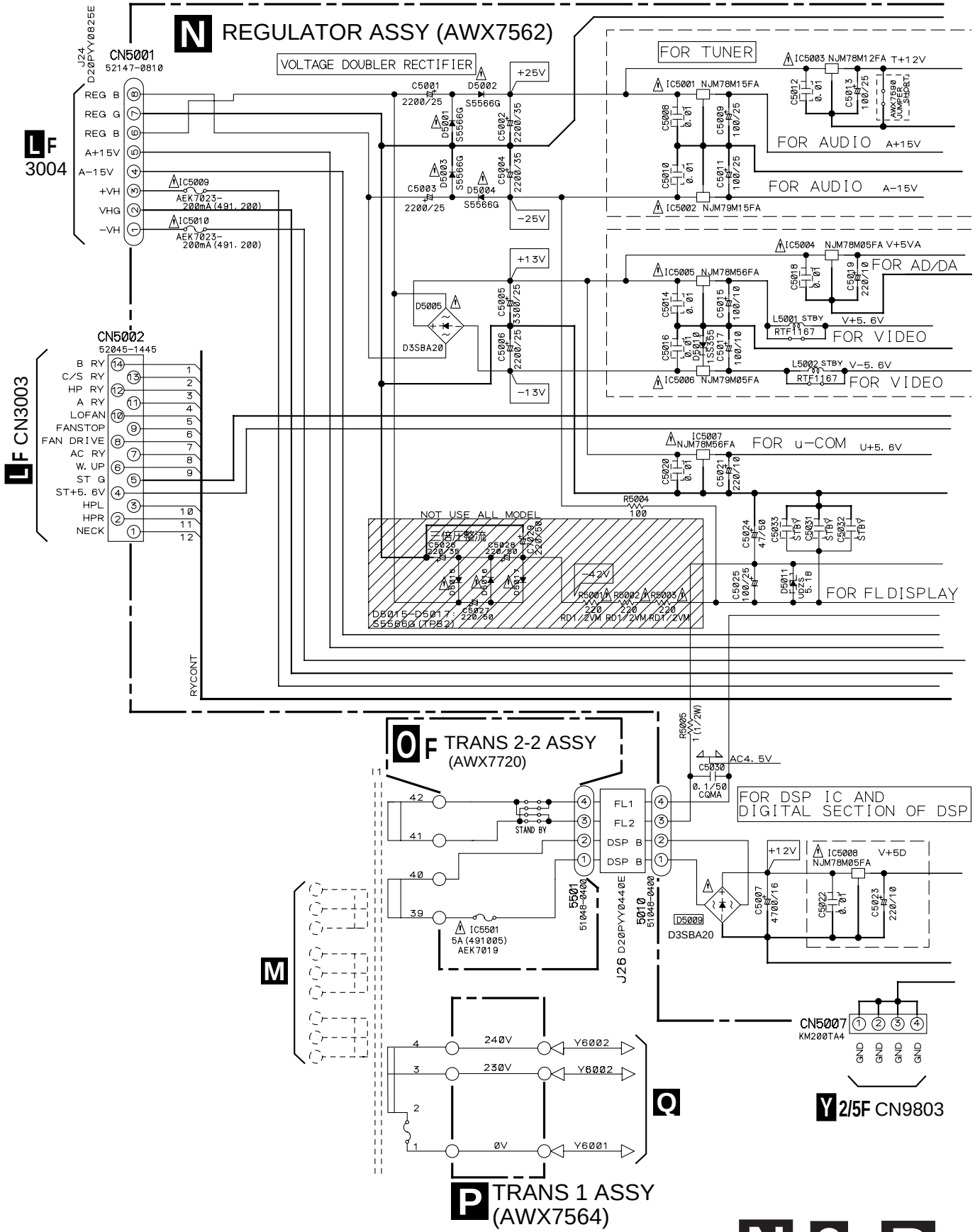

3.6 TRANS 2-1, FAN DRIVER and SP/PS ASSYS

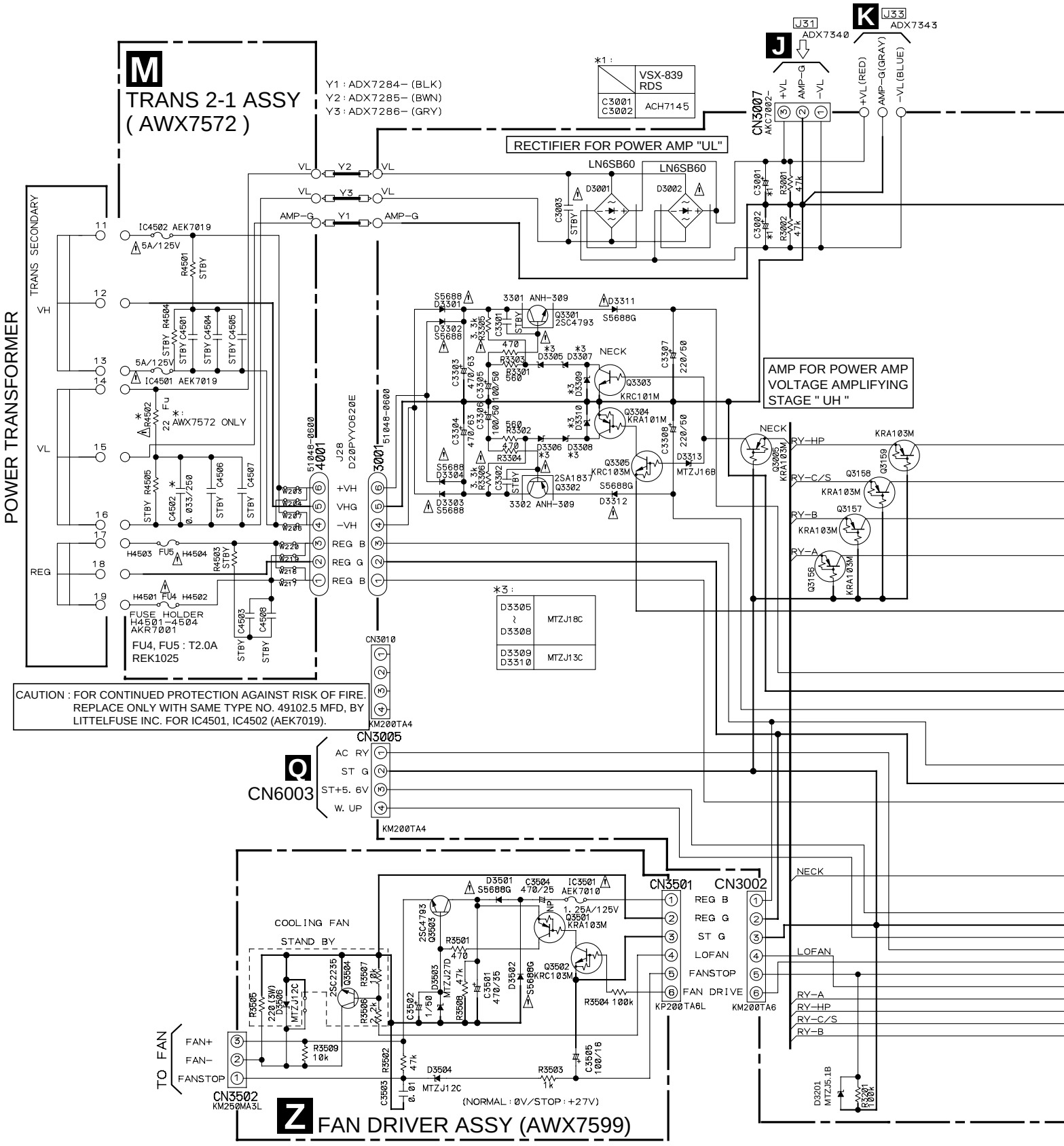

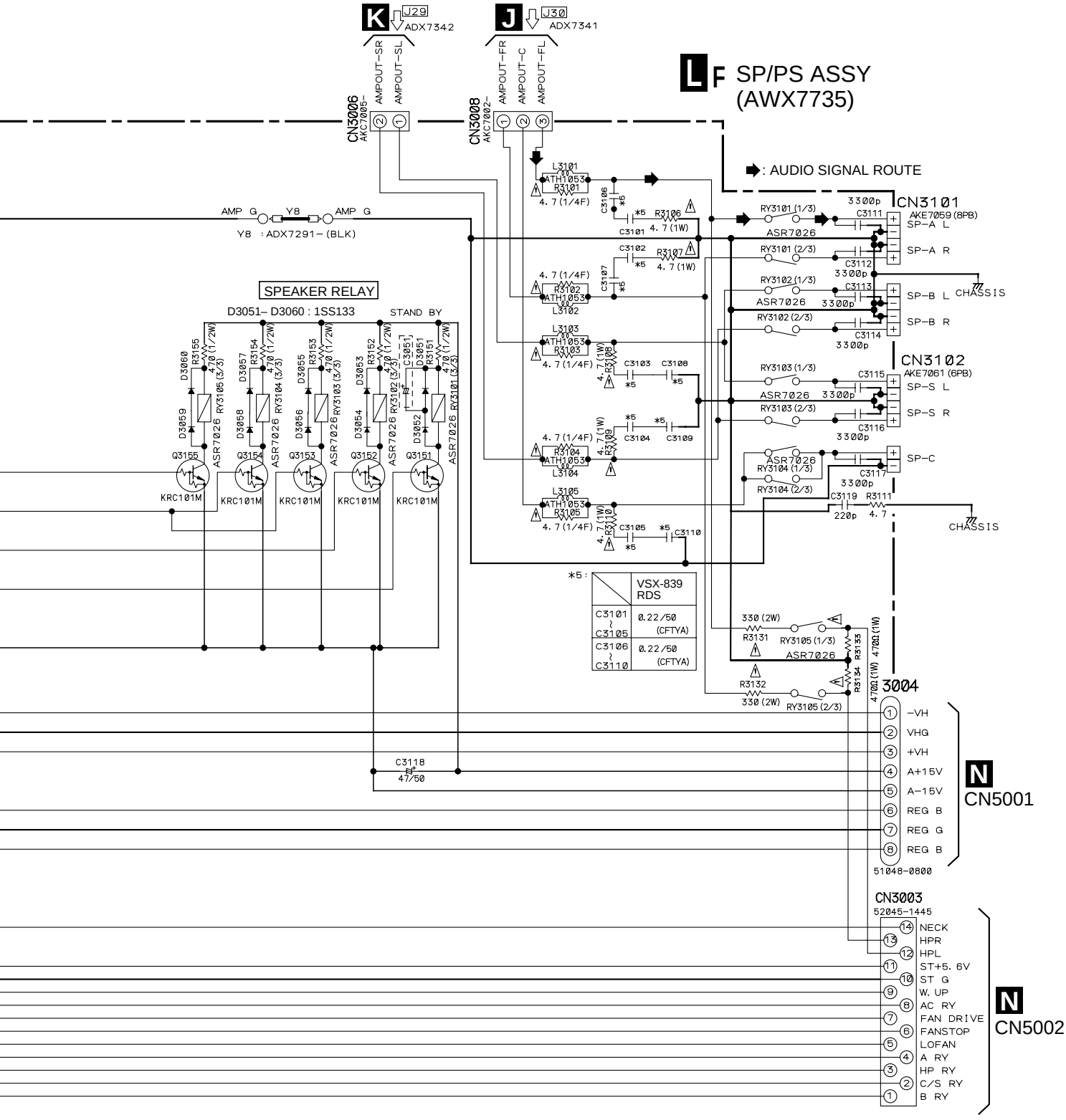

• NOTE FOR FUSE REPLACEMENT

CAUTION - FOR CONTINUED PROTECTION AGAINST RISK OF FIRE. REPLACE WITH SAME TYPE AND RATINGS ONLY.

3.7 DISPLAY ASSY

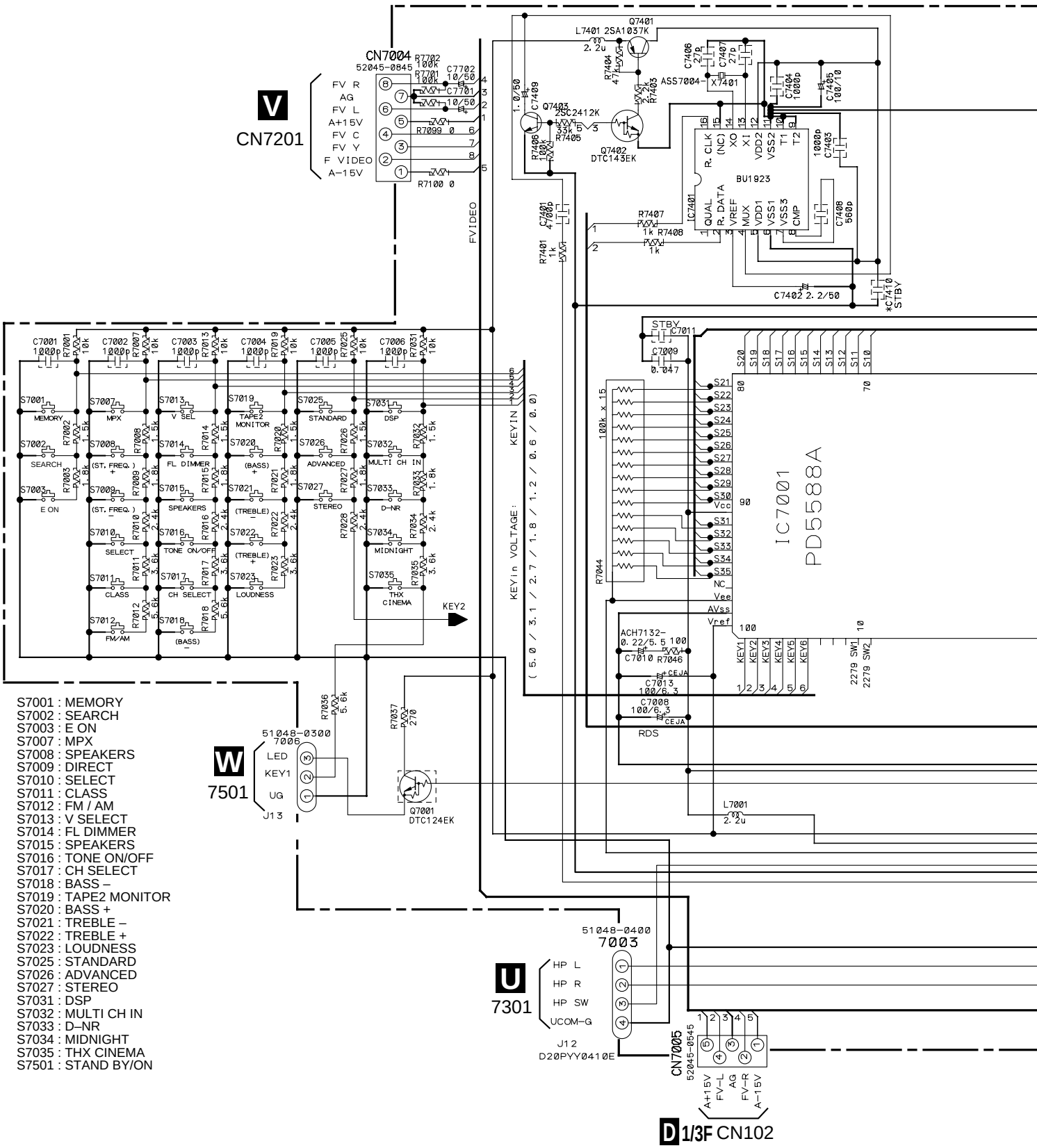

S7001 : MEMORY
S7002 : SEARCH
S7003 : E ON
S7007 : MPX
S7008 : SPEAKERS
S7009 : DIRECT
S7010 : SELECT
S7011 : CLASS
S7012 : FM / AM
S7013 : V SELECT
S7014 : FL DIMMER
S7015 : SPEAKERS
S7016 : TONE ON/OFF
S7017 : CH SELECT
S7018 : BASS –
S7019 : TAPE2 MONITOR
S7020 : BASS +
S7021 : TREBLE –
S7022 : TREBLE +
S7023 : LOUDNESS
S7025 : STANDARD
S7026 : ADVANCED
S7027 : STEREO
S7031 : DSP
S7032 : MULTI CH IN
S7033 : D–NR
S7034 : MIDNIGHT
S7035 : THX CINEMA
S7501 : STAND BY/ON

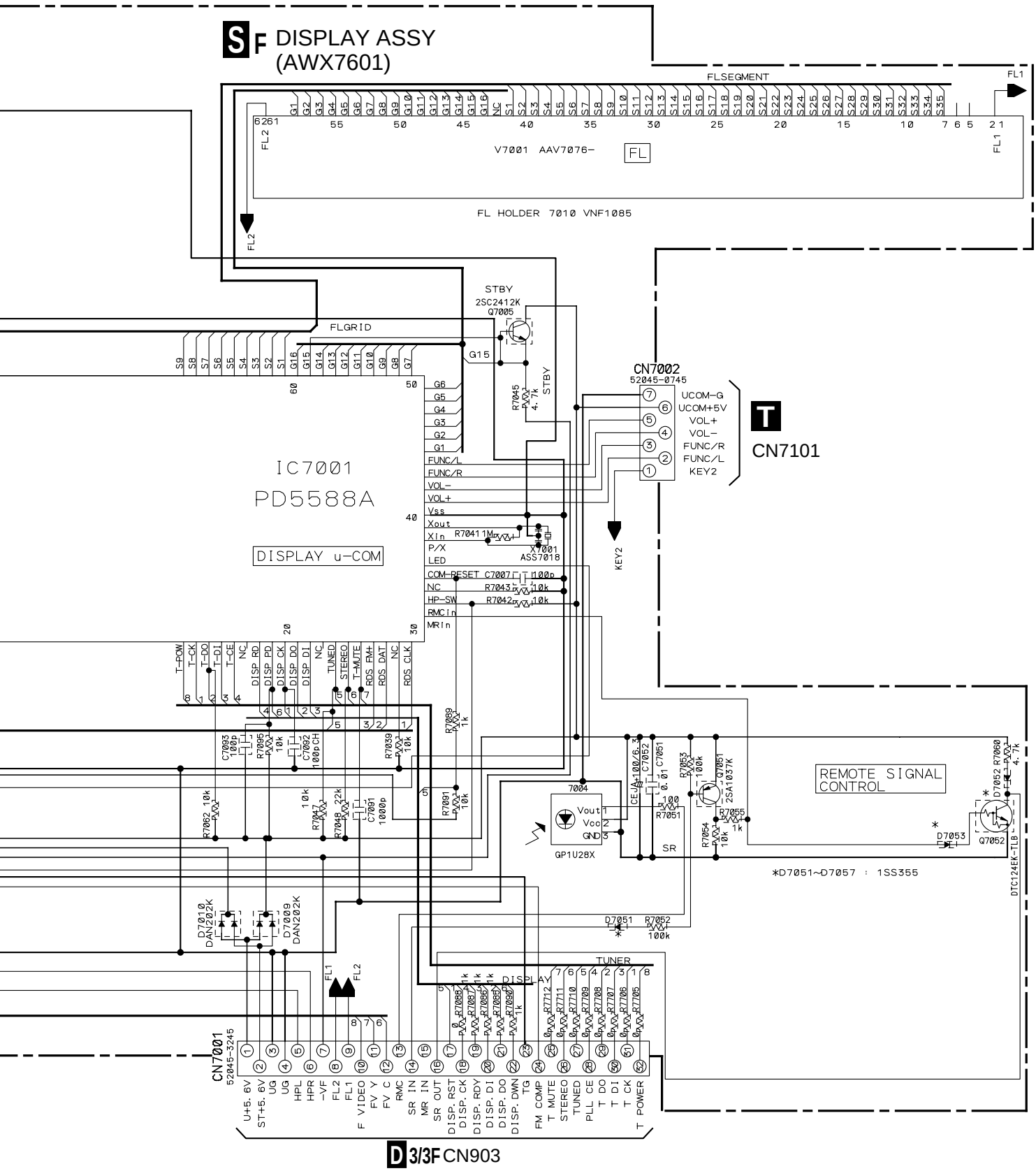
SF DISPLAY ASSY
(AWX7601)
FLSEGMENT
FL1
FL2
V7001 AAV7076-
FL
FL HOLDER 7010 VNF1085
STBY
2SC2412K
Q7005
FLGRID
CN7002
52045-0745
UCOM-G
UCOM+5V
VOL+
VOL-
FUNC/R
FUNC/L
KEY2
T
CN7101
IC7001
PD5588A
DISPLAY u-COM
FUNC/L
FUNC/R
VOL-
VOL+
Vss
Xout
Xin
P/X
LED
COM-RESET
NC
HP-SW
RMCin
MRIn
X7001
ASS7018
KEY2
REMOTE SIGNAL
CONTROL
GP1U28X
*D7051~D7057 : 1SS355
DTC124EK-TLB
TUNER
DISPLAY
CN7001
52045-3245
U+5. 6V
ST+5. 6V
UG
UG
HPL
HPR
-VF
FL2
FL1
F VIDEO
FV Y
FV C
RMC
SR IN
MR IN
SR OUT
DISP. RST
DISP. CK
DISP. RDY
DISP. DI
DISP. DO
DISP. DWN
TG
FM COMP
T MUTE
STEREO
TUNED
PLL CE
T DO
T DI
T CK
T POWER
D 3/3F CN903

3.8 DSP ASSY (2/5)

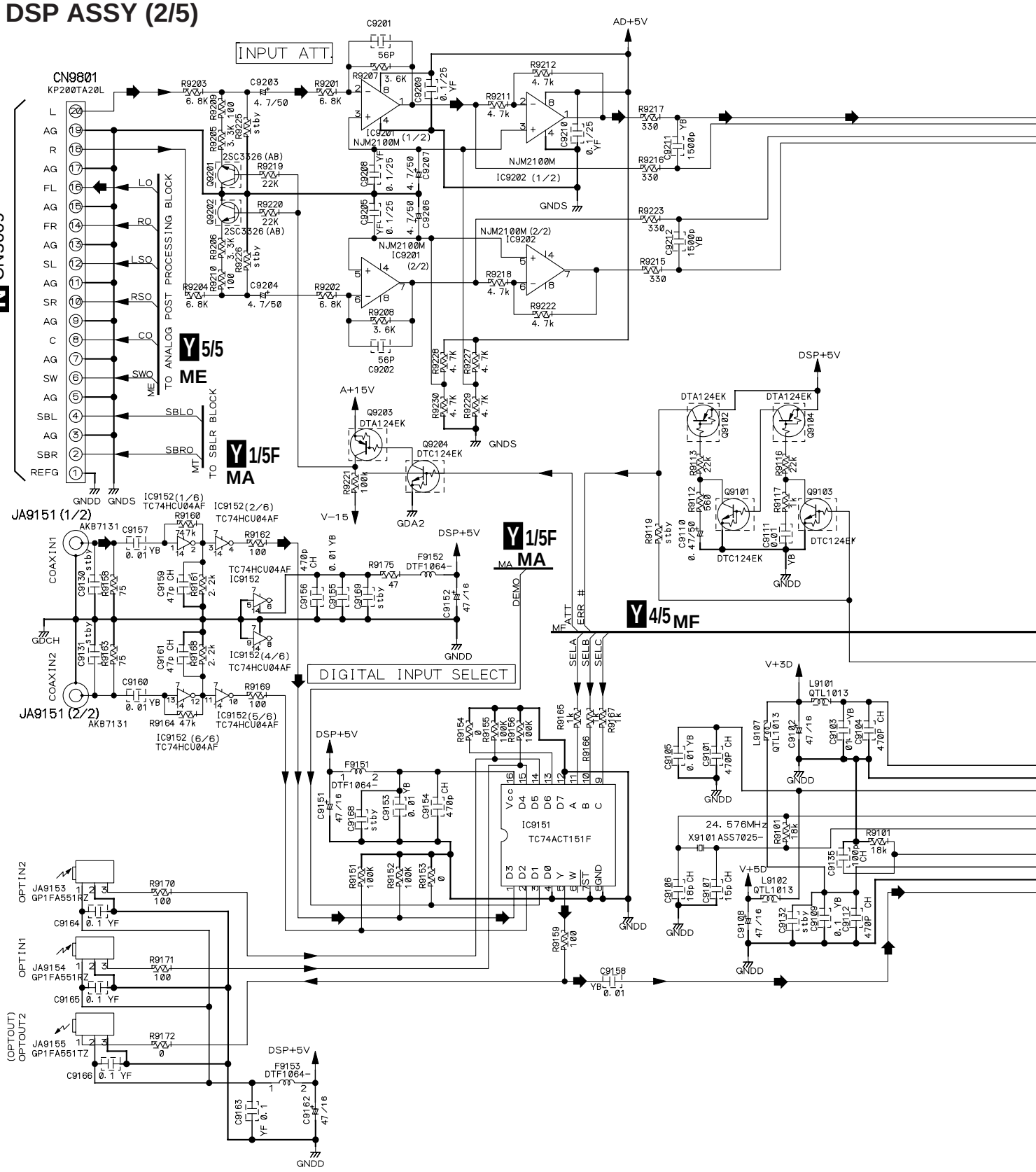

Y 2/5 F DSP ASSY (AWX7626)

: AUDIO SIGNAL ROUTE

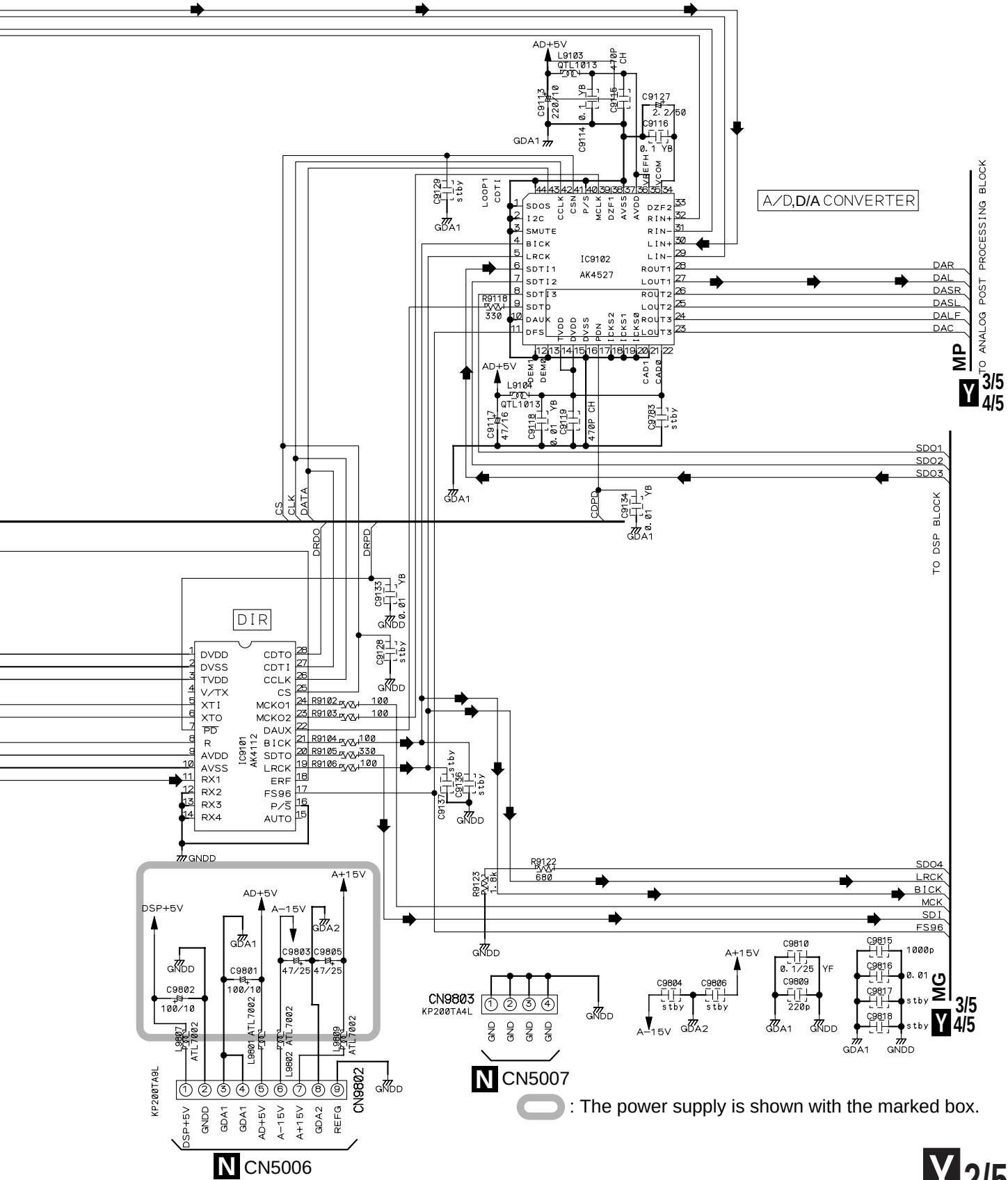

3.9 PRIMARY and P-SW ASSYS

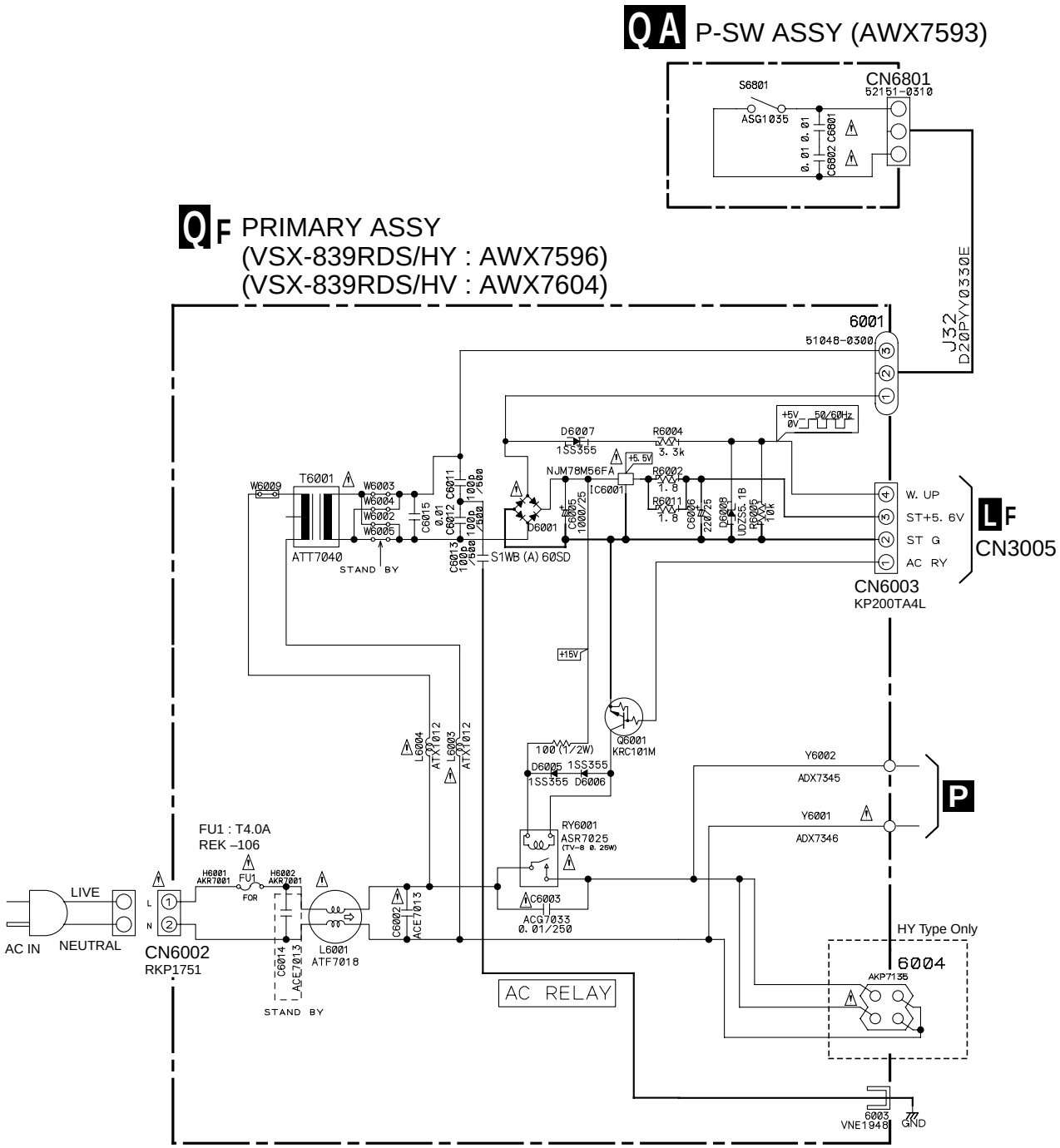

The ⚠ mark found on some component parts indicates the importance of the safety factor of the part. Therefore, when replacing, be sure to use parts of identical designation.

- NOTE FOR FUSE REPLACEMENT

CAUTION - FOR CONTINUED PROTECTION AGAINST RISK OF FIRE. REPLACE WITH SAME TYPE AND RATINGS ONLY.