STEREO AMPLIFIER

SA-606

S
S/G
HG

OPERATING INSTRUCTIONS

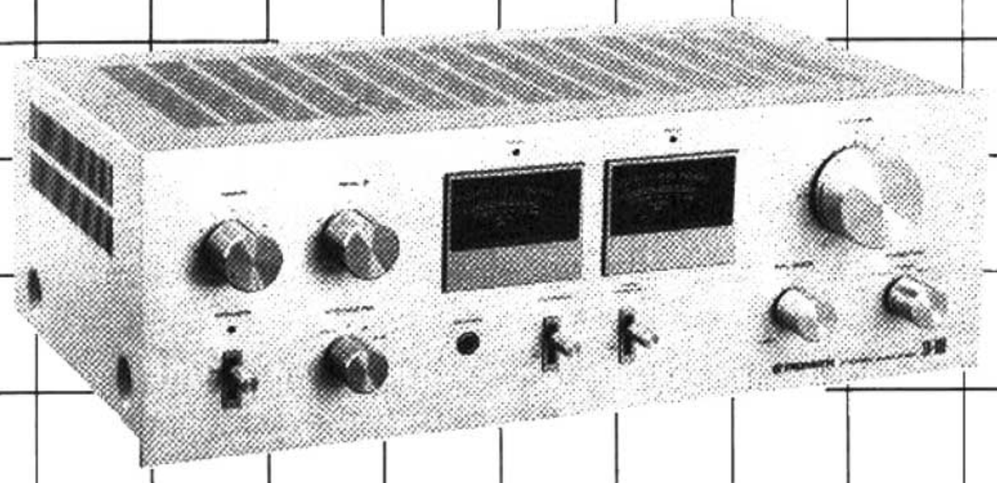

SA-606 are designed to operate 220V or 240V (HG model) main and 110V, 120V, 220V or 240V (S model) main. Before turning on the power, please confirm the line voltage setting indicated on the rear of your unit corresponds to the supply voltage in your area; if not, change the setting as described in IMPORTANT—LINE VOLTAGE on page 12.
SA-606/HG provides the DIN connector on the rear panel so it can be connected to the tape deck for recording/playback by using the DIN cord.

PIONEER®

www.hifiengine.com

FEATURES

Low-distortion, Stable-output Power Amplifier

The power amplifier stage adopts a high-reliability npn, pnp silicon power transistor-based differential first-stage current mirror load, all-stage direct-coupled pure complementary OCL circuit.

Continuous power output is 40watts* per channel, min., at 8ohms from 20Hertz to 20,000 Hertz with no more than 0.05% total harmonic distortion.

This is an output which is more than sufficient for first-rate reproduction of music so the SA-606 delivers a powerful and yet high-fidelity stereo reproduction for your enjoyment. Moreover, the first-stage differential amplifier which employs two power transistors and the constant current circuit assures an stable operation stable even in the face of fluctuations in the power supply voltage and external temperature.

Equalizer Amplifier for the Faithful Reproduction of Sound on Record

The equalizer amplifier adopts low-noise, high-gain IC and it employs a dual positive and negative power supply system for a maximum allowable phono input of 180mV (1kHz) with respect to a rating of 2.5mV. This means that you can sit back and listen to practically distortion-free record play when you use high-output cartridges or when the music source is punctuated by high signal peaks. In addition, the equalizer elements employ only those parts that have undergone rigorous selection and deviation in the 20Hz 20kHz frequency band is kept down to ±0.3dB. These features ensure a reproduction of records which is faithful to the original sound.

Power Meters that Allow the Output Level to be Read Out Directly

The two large-sized meters located in the center of the front panel incorporate logarithmic compression scales in order to display the output level across a wide range from 0.01W to 100W. These handy meters mean that you can directly read out the power level from 0.01W up to the maximum output level of the SA-606 at an 8-ohm impedance.

Two Sets of Speaker Systems can be Connected

The SA-606 comes with two sets of speaker terminal and a speaker selector switch so you can compare the sound through two different sets of speakers or place a second set in another room. Another useful facility is the headphones jack which allows you to listen to music in private late at night through your stereo headphones.

Functionally Streamlined and Attractively Designed Front Panel

The functionally designed front panel is made for easy operation. Its two large-sized output meters in the center as well as its knobs and switches which respond lightly to the touch make operating the SA-606 a real pleasure.

The design matches that of other Pioneer hi-fi stereo components. Just one look is enough to reassure you that you have bought the highest performance and most attractively designed components available on the market.

** Measured pursuant to Federal Trade Commission's Trade Regulation rule on Power output Claims for Amplifiers.*

CONTENTS

Features 2
Stereo System Composition 3
Installation Cautions 3
Connection Diagram 4
Connections 5
Front Panel Facilities 6
Before Operation 7
Operation 7
Using the Tape Decks 8
Using the AUX Input Jacks 9
Conditions Frequently Mistaken for Malfunction 10
Specifications 11
Important—Line Voltage 12
Schematic Diagram . . . . . Insertion

www.hifiengine.com

STEREO SYSTEM COMPOSITION

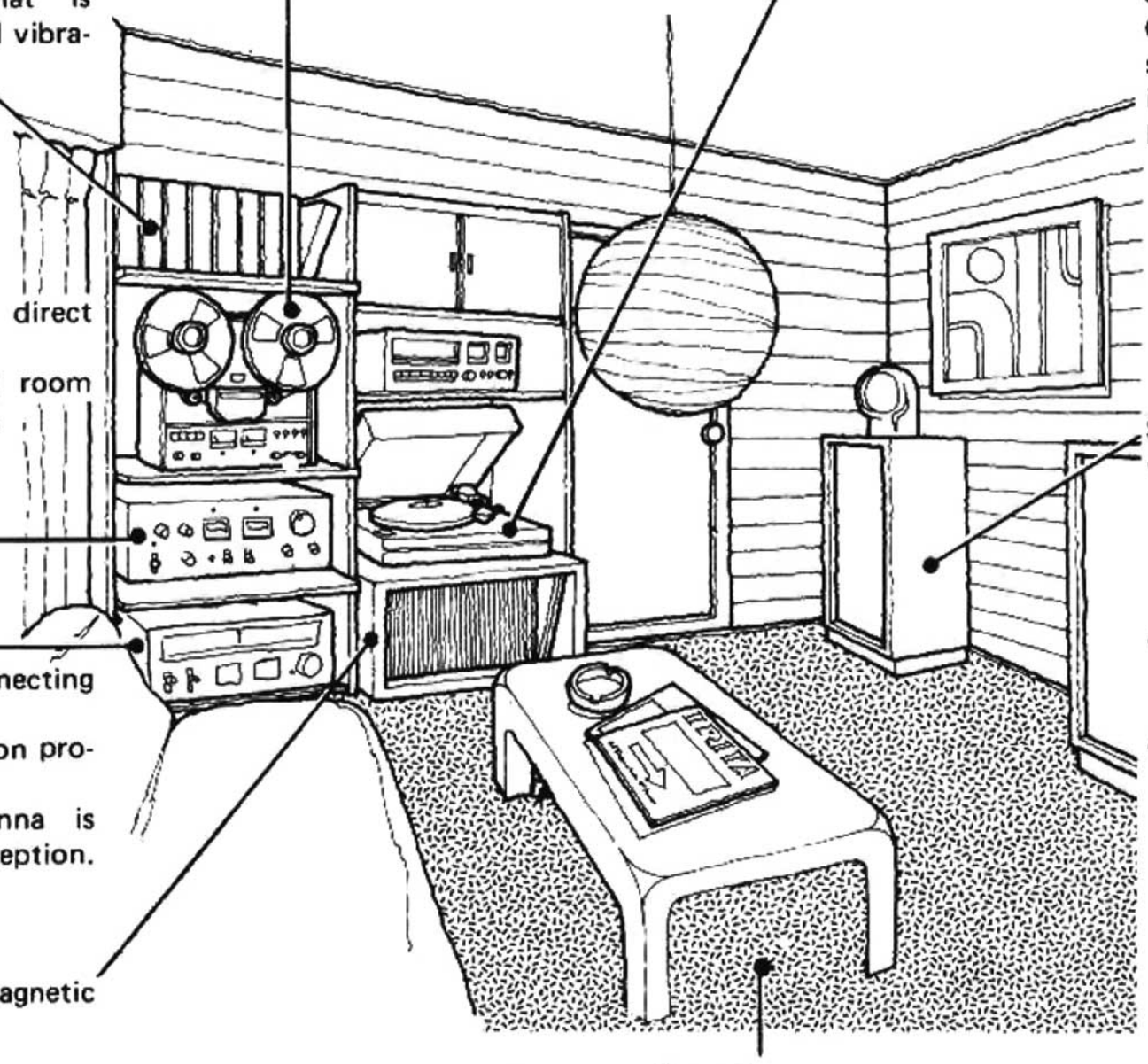

Tape deck
- Be sure to install reel clamps when operating vertically.
- Protect with dust cover when not in use.

Turntable
- Protect from vibrations.
- Keep dust cover closed whenever possible.

Cabinet
- Stable construction that is durable under weight and vibration.

Speaker connections
Check that speaker cord has sufficient current handling capacity. Avoid using longer cord lengths than necessary.

Thick curtains
- Shield equipment from direct sunlight.
- Aid to reduce listening room reflections and resonance.

Speaker system
- Rear and side panels of left and right speakers should be at the same conditions. (Placing with rear panel against a wall improves bass.)
- Install speakers so that vibrations are not transferred directly to the floor.
- Employ stands or concrete blocks with bookshelf type speakers.

SA-606

Tuner
- Do not use longer connecting cords than necessary.
- Install antenna in direction providing best reception.
- An outdoor FM antenna is recommended for FM reception.

Storage case
- Store records vertically.
- Protect tapes from magnetic fields.

- Best listening Position is slightly to the rear of the apex of an equilateral triangle formed with the left and right speakers.
- Furniture materials and placement can affect tone.

Carpet
- Improves sound absorption.

INSTALLATION CAUTIONS

In order to ensure long term top performance, do not install the SA-606 in locations such as the following:

Locations to be avoided	Detrimental effects
• Direct sunlight, radiators or other sources of heat.	• Accumulated effects of internal and external heat can reduce thermal dissipation efficiency of power amplifier and lead to component deterioration. In some cases heating may also prevent stable operation.
• Poorly ventilated, humid or dusty locations.	• Can cause faulty connection or corrosion of input and output terminals. Humidity and moisture in particular may reduce insulation performance and lead to current leakage or component overheating.
• Unstable supports that are not level or subject to vibration.	• May adversely affect precision circuit components. Weight can also pose a hazard in regions subject to seismic activity.
• Locations where alcohols, insect spray or flammable material is used or stored.	• In addition to fire hazard, some materials may contribute to corrosion or mar finish of equipment.

www.hifiengine.com

CONNECTION DIAGRAM

Four Line Voltage (110V, 120V, 220V, 240V) Model

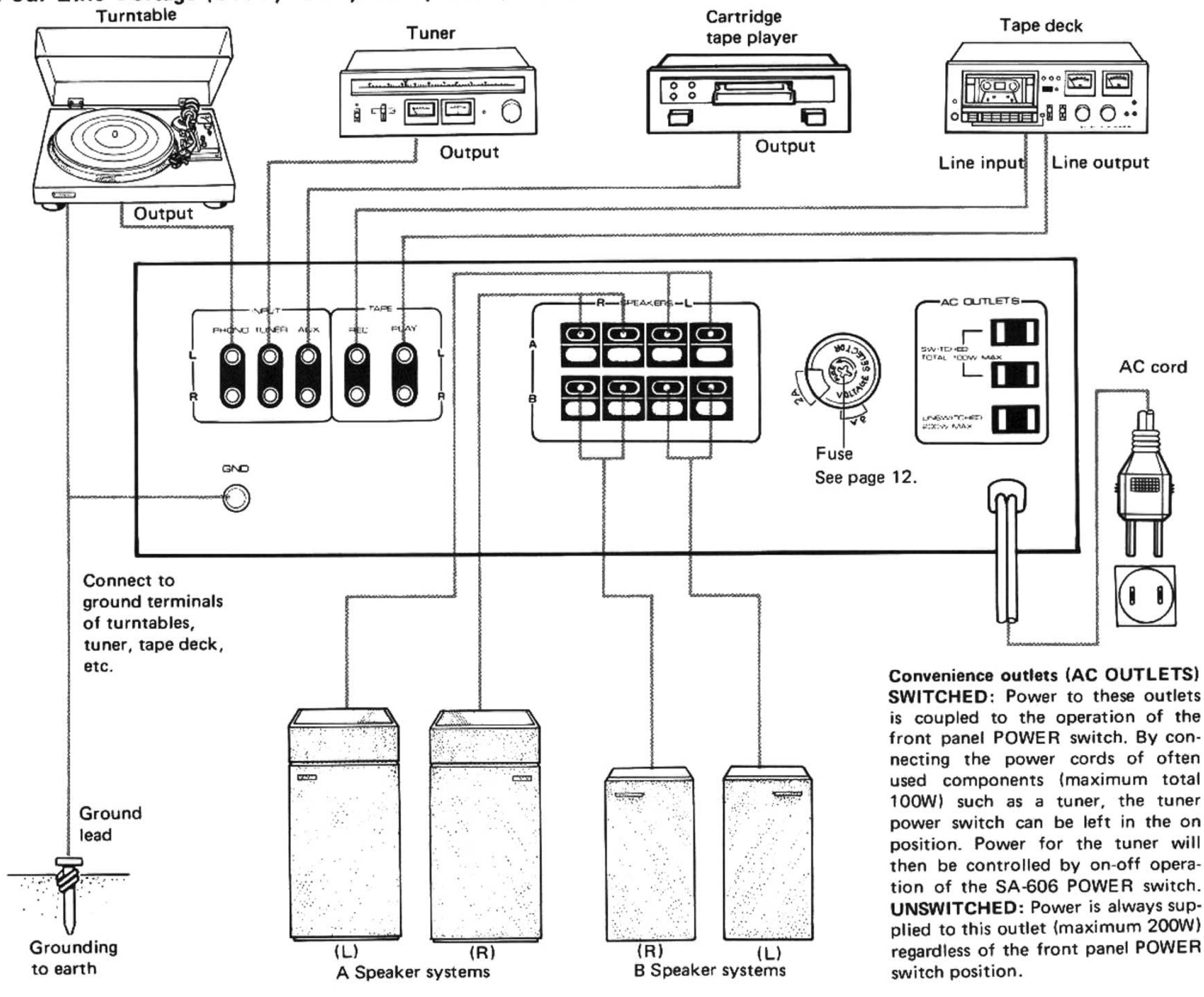

Convenience outlets (AC OUTLETS)
SWITCHED: Power to these outlets is coupled to the operation of the front panel POWER switch. By connecting the power cords of often used components (maximum total 100W) such as a tuner, the tuner power switch can be left in the on position. Power for the tuner will then be controlled by on-off operation of the SA-606 POWER switch.
UNSWITCHED: Power is always supplied to this outlet (maximum 200W) regardless of the front panel POWER switch position.

Two Line Voltage (220V, 240V) Model

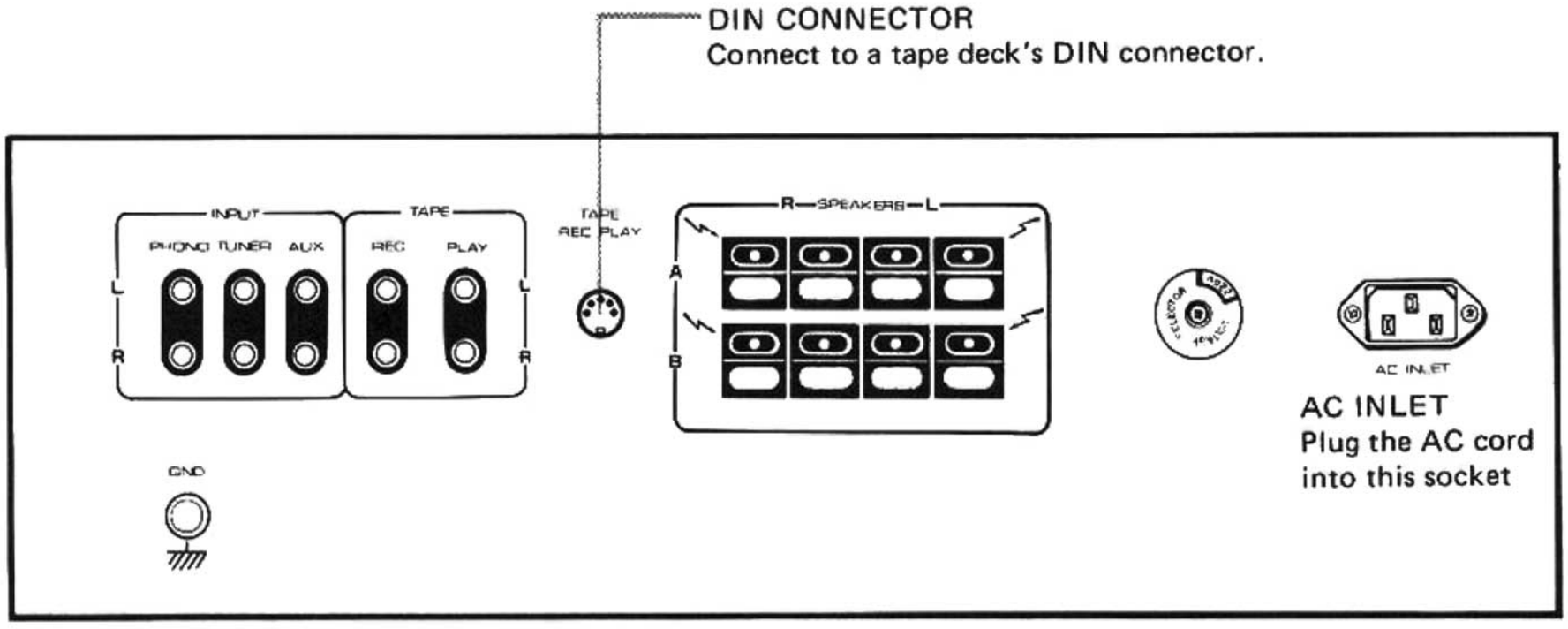

www.hifiengine.com

CONNECTIONS

Precautions

- Set the POWER switch to ON only when you have completed all the connections of the stereo system. Always set this switch to OFF if you want to change the connections.
- All the stereo amplifier's jacks are aligned for easy connection in two rows: the top row for L (left channel) and the bottom row for R (right channel). Always connect L to L and R to R with the audio component outputs and input jacks.

SPEAKER SYSTEMS

The amplifier is provided with two sets of SPEAKERS output terminals. Use the A set when connecting only one set of speakers.
Viewed from the front, the R (right channel) SPEAKERS terminals are on the right and the L (left channel) SPEAKERS terminals are on the left. Connect the left channel speaker to the L terminals and the right channel speaker to the R terminals. The red L and R SPEAKERS terminals have a plus polarity and the black terminals have a minus polarity and the speaker systems have also the polarities (plus, minus). When connecting, always connect minus to minus and plus to plus.

NOTE:
This is a cause of damage to the power transistors, etc., so do not go on using the amplifier with the speaker output terminals shorted (in this state, the negative and positive terminals are connected together).

Connecting the speaker cords to the SPEAKERS terminals (Fig. 1)

1. Strip about 10mm of the insulation from the end of the speaker cords. If the conductor is stranded, twist the strands together so that they do not come into contact with other terminals.
2. Depress the terminal buttons and insert the cords into the terminal holes.
3. Release the buttons and check that the cords are secure.

TURNTABLE CONNECTIONS (Fig. 2)

Connect the output cords of a turntable using a moving magnet (MM) cartridge to the PHONO input jacks. Connect the ground lead of the turntable to the GND terminal on the amplifier.

TUNER CONNECTIONS (Fig. 3)

Connect the output jacks of a stereo tuner to the TUNER jacks with the connecting cords.

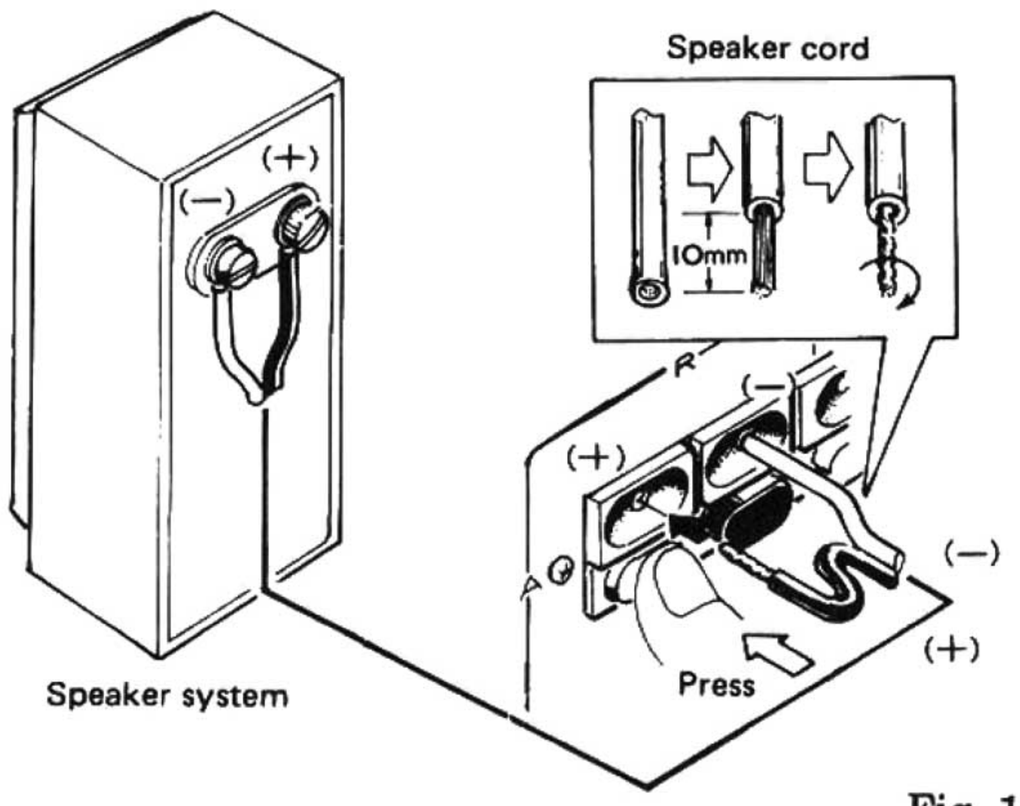

Fig. 1

NOTE:
If you want to use two sets of speaker systems, make sure that the impedance of each system is 8 ohms or more.

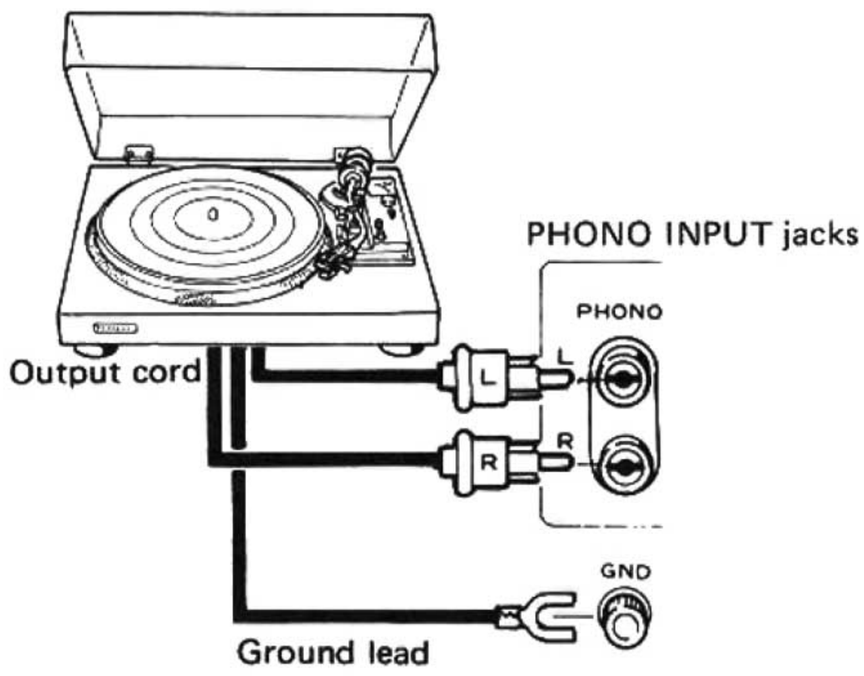

Fig. 2

NOTE:
In addition to turntables using MM cartridges, there are others that employ induced magnet (IM), moving iron (MI) and high-output moving coil (MC) cartridges. If you intend to use a turntable with a low-output MC cartridge, always provide a special MC cartridge boosting transformer or head amplifier.

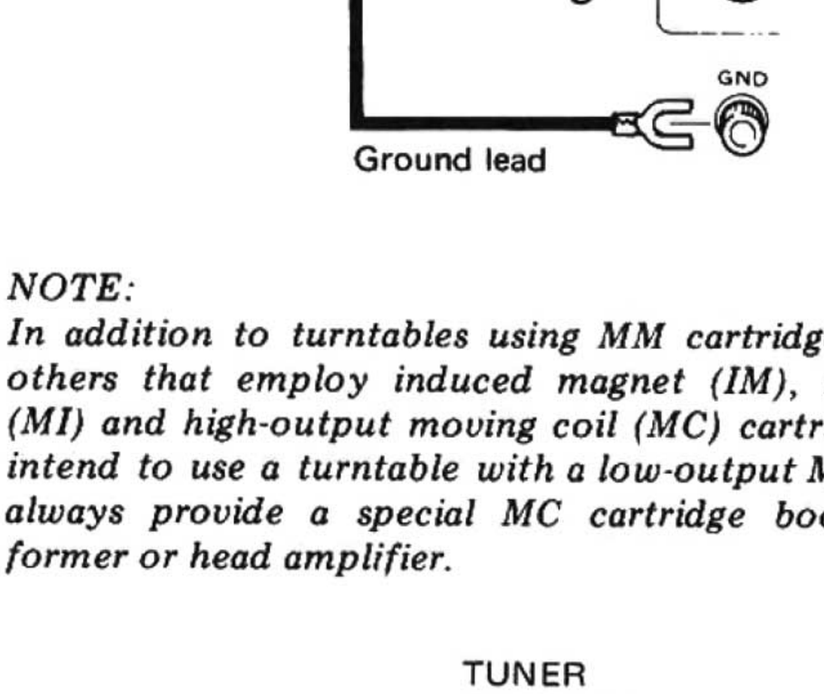

Fig. 3

www.hifiengine.com

FRONT PANEL FACILITIES

POWER SWITCH

Flip this switch to the ON position to supply power to the stereo amplifier.

BASS, TREBLE CONTROLS

Adjust the bass with the BASS control and the treble with the TREBLE control. The bass and treble are strengthened when the controls are turned to the right and weakened when turned to the left.

The sound quality of the music source depends on how the sound is absorbed and reflected in the listening room and also on the characteristics of the speakers. You can use these controls to compensate accordingly and adjust the sound to your preference.

POWER METERS

These power meters allow you to read out the rated power level when speakers with a nominal impedance of 8-ohms are connected to the amplifier's speaker terminals.

NOTE:
These values are related to the impedance of the speakers and they vary according to the frequency. In order to find out the exact output level, connect an 8-ohm dummy load instead of the speakers.

PEAK POWER INDICATORS

These lamps light up when the amplifier's output is at its peak level with 8 ohms load. Turn the VOLUME control to a lower position until the indicator does not light up continuously but only intermittently.

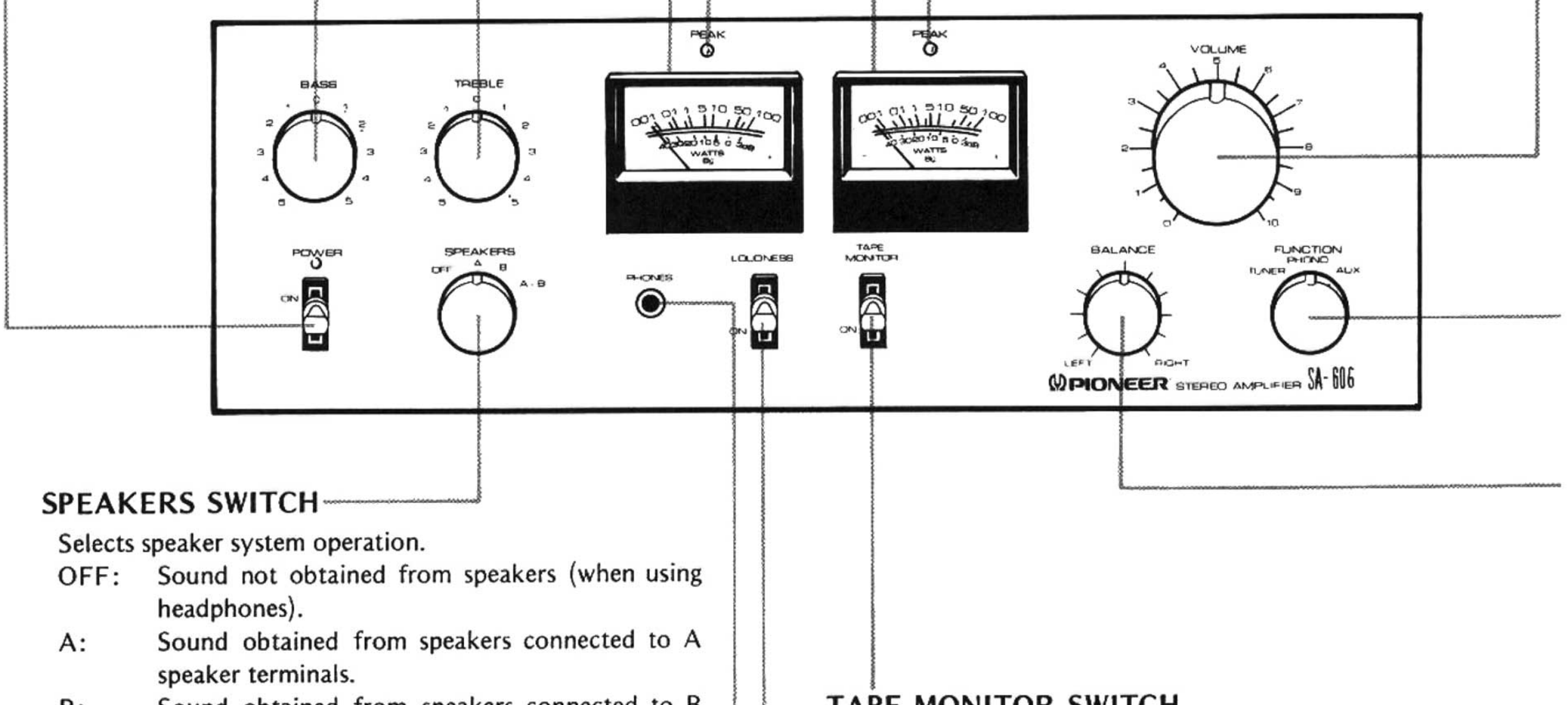

SPEAKERS SWITCH

Selects speaker system operation.

OFF: Sound not obtained from speakers (when using headphones).

A: Sound obtained from speakers connected to A speaker terminals.

B: Sound obtained from speakers connected to B speaker terminals.

A + B: Sound obtained from speakers connected to both A and B speakers terminals.

NOTE:
When listening with headphones or to temporarily interrupt the speaker sound, set switch to OFF or to an unused speaker position.

PHONES JACK

When listening with stereo headphones, connect them to this jack.

NOTE:
Set the SPEAKERS switch to OFF when listening only with headphones.

TAPE MONITOR SWITCH

Set switch to ON with a tape deck which is connected to the TAPE (REC and PLAY) jacks when you want to monitor the playback or recording of a tape.

NOTE:
Set this switch to the upper (off) position when listening to records or a broadcast.

LOUDNESS SWITCH

Set this switch to ON when listening at a low volume. The frequency response of the human ear varies according to the listening volume, and setting this switch to the ON position compensates for hearing response by emphasizing the bass and treble.

www.hifiengine.com

VOLUME CONTROL

Use this control to adjust the output level to the speakers and headphones. Turn it clockwise to increase the output level.

FUNCTION SWITCH

Selects desired playback source.

TUNER: To listen to broadcasts with a tuner connected to the TUNER jacks.

PHONO: To play records on a turntable connected to the PHONO jacks.

AUX: To play a component connected to the AUX jacks.

NOTE:
Turn the VOLUME control down first before selecting a different position with the FUNCTION switch while the sound from one program source is being reproduced.

BALANCE CONTROL

Use this control to balance the volume of the left and right channels. First, however, tune the AM broadcast, and adjust so that the sound appears to come from somewhere exactly between the two speakers. If the sound appears to be louder on the right, it means that the volume of the right channel is higher. Turn the BALANCE control to the left and adjust. Conversely, if the sound appears to be louder on the left, it means that the volume of the left channel is higher. Therefore, turn the BALANCE control to the right and adjust.

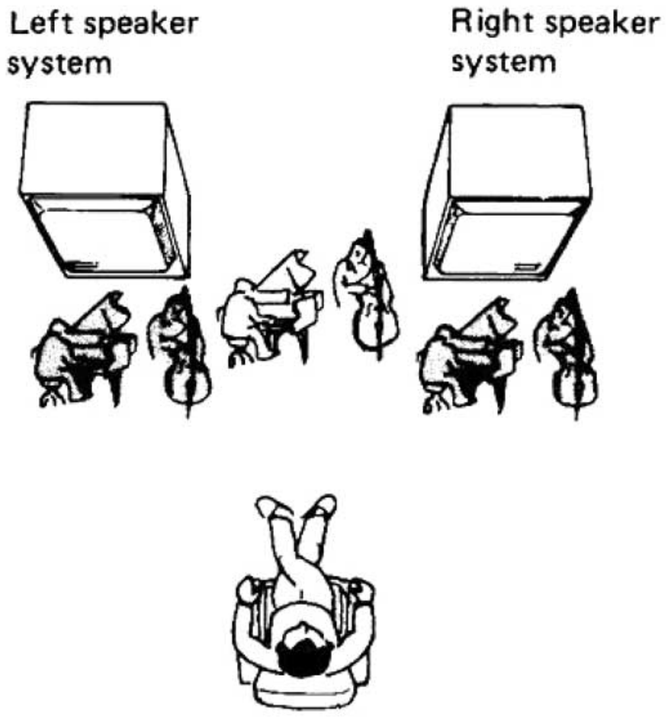

Fig. 4

BEFORE OPERATION

Before switching the power on, set the various controls as follows:

- Set the VOLUME control to the "0" position.
- Set the BALANCE control to the center position.
- Set the BASS, TREBLE controls to the center positions.
- Set the TAPE MONITOR switch to the upper position (OFF).
- Set the SPEAKERS switch so that it corresponds to the speaker system which is connected to the SPEAKERS terminals on the rear panel.

OPERATION

PLAYING RECORDS

1. Set the FUNCTION switch to PHONO.
2. Prepare the turntable for operation and start playing the record.
3. Adjust the volume with the VOLUME control, and the tone with the BASS and TREBLE controls to the preferred levels.

Precautions when playing records

- Lower the stylus gently onto the surface of the record. It is a good idea to turn the volume down when lowering the stylus onto the record.
- Do not cause the turntable to vibrate while a record is being played since this will cause the stylus to jump and scratch the record. Do not turn off the power if the stylus is still tracing grooves on the record.

LISTENING TO THE TUNER (AM, FM BROADCAST)

1. Set the FUNCTION switch to TUNER.
2. Operate the tuner and tune in to the desired station.
3. Adjust the volume with the VOLUME control, and the tone with the BASS, TREBLE controls to the preferred levels.

Protection Circuitry

The protection circuitry is actuated in the event of a malfunction whereby DC current is generated at the output terminal in order to safeguard against damage to the speakers.

If the sound is suddenly no longer audible through the speakers in the middle of a performance, unplug the power plug from the power outlet and get in touch with your nearest Pioneer Authorized Service Center.

www.hifiengine.com

USING THE TAPE DECKS

TAPE DECK CONNECTIONS

You can use the TAPE jacks on the rear panel of the amplifier' to connect a tape deck (open-reel or cassette).
Use the connecting cords that come with the tape deck to connect the deck to the amplifier. The upper jack is for the left channel and the lower jack for the right channel.

Connections for recording

Connect the recording input jacks (LINE INPUT) on the tape deck to the TAPE REC jacks on the amplifier.

Connections for playback

Connect the playback output jacks (LINE OUTPUT) on the tape deck to the TAPE PLAY jacks on the amplifier.

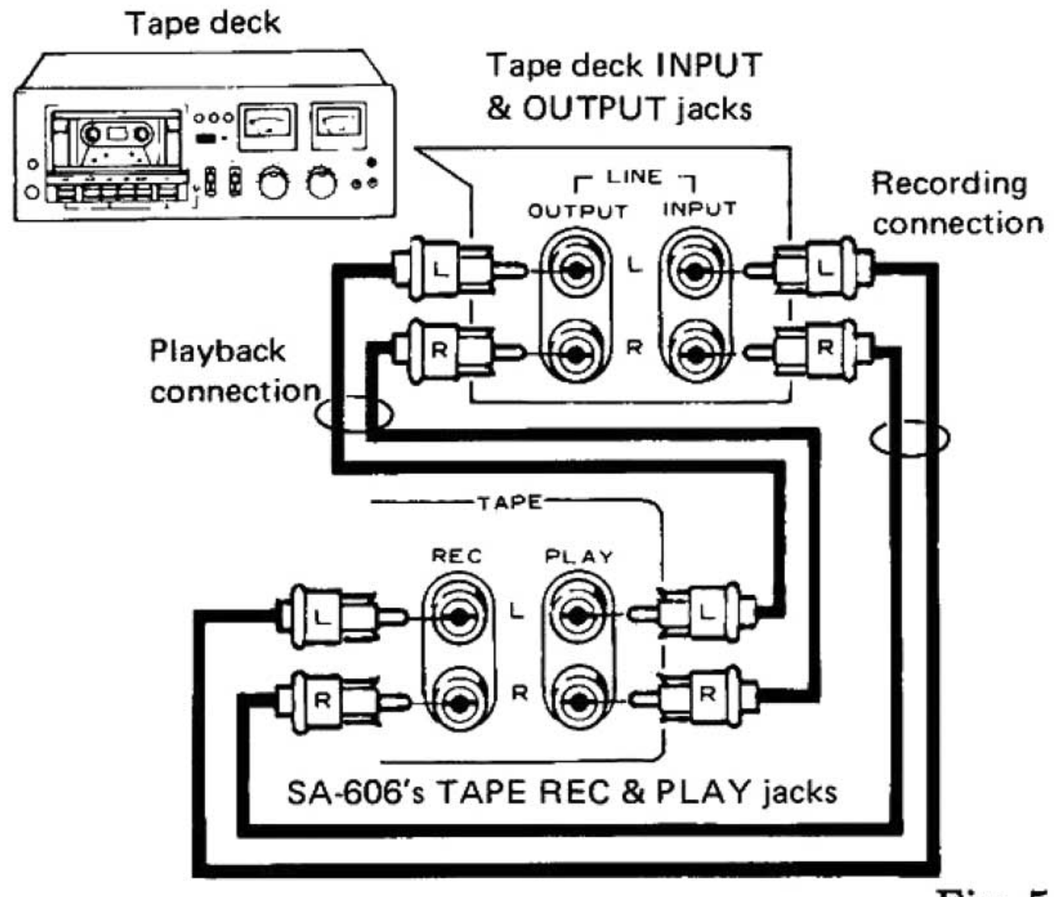

Fig. 5

Connections using the recording/playback connector (DIN cord)

Applicable to HG (220V, 240V) model only

If your tape deck is equipped with a recording/playback connector (DIN-type), use the optional recording/playback cord to connect this connector with the TAPE REC/PLAY jacks on the amplifier. This means that the deck and amplifier are now set up for both recording and playback. In such cases, do not connect pin cords (ordinary pin plug cords) to the TAPE REC and PLAY jacks.

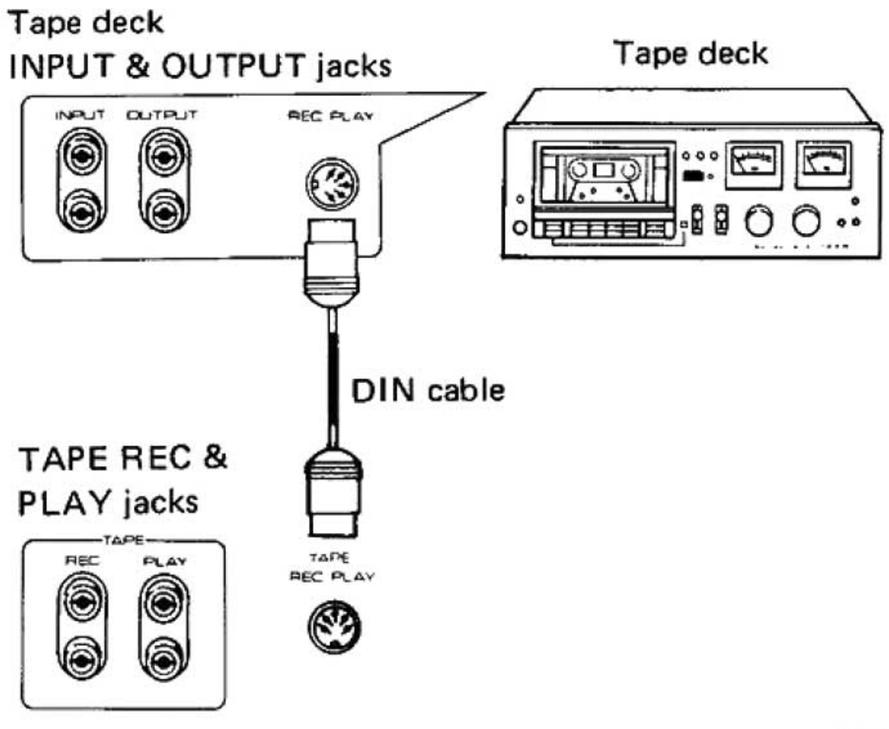

Fig. 6

PLAYBACK

Proceed as follows when playing back pre-recorded music tapes available on the open market, and tapes on which you have recorded programs:

1. As shown in Fig. 7, set the TAPE MONITOR switch to ON.
2. Operate the tape deck controls for playback.
3. Adjust the VOLUME, BASS and TREBLE controls for the listening level and tone quality of your preference.

NOTES:

1. *Always return the TAPE MONITOR switch to the upper position (OFF) when you are not playing back a tape.*
2. *As long as the TAPE MONITOR switch is at ON, you will be able to play back a tape regardless of the setting of the function switch.*

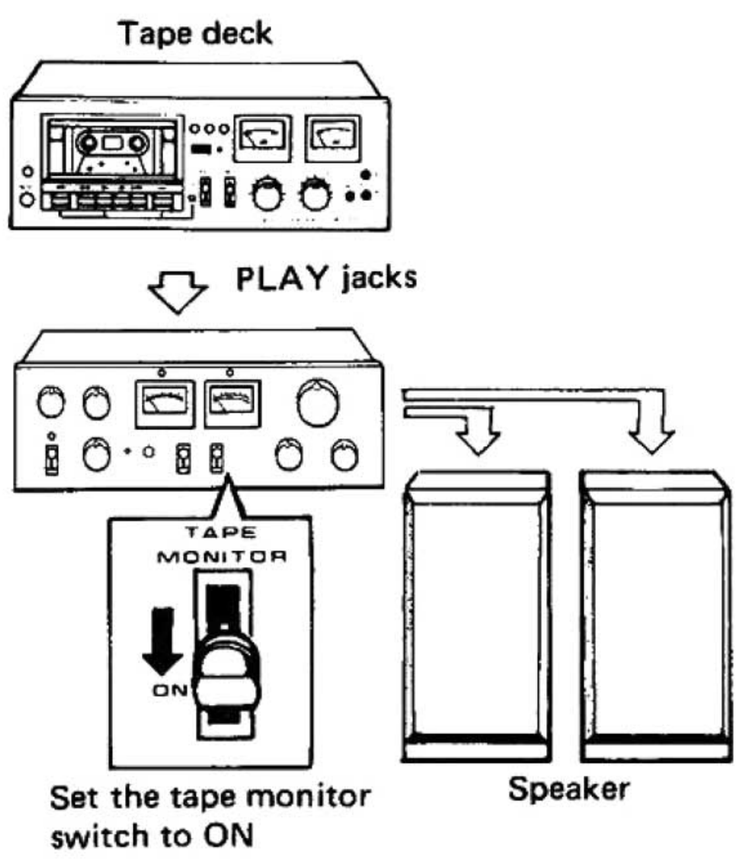

Fig. 7

www.hifiengine.com

RECORDING

1. Set the FUNCTION switch so that it corresponds to the program source which you intend to record (for example, a record of a turntable or an FM broadcast).
2. Play the selected program source.
3. Operate the tape deck controls and start recording.

Tape monitoring

If a recording is being made on a 3-head tape deck, the recorded sound can be monitored through the speaker systems if the TAPE MONITOR switch is set to ON. In this case, both recording and playback connections must be made.

NOTE:
If you have a 2-head open-reel deck or cassette deck, you will not be able to monitor the recorded sound even if you set the TAPE MONITOR switch to ON. However, you will be able to hear the sound at the playback end (program source).

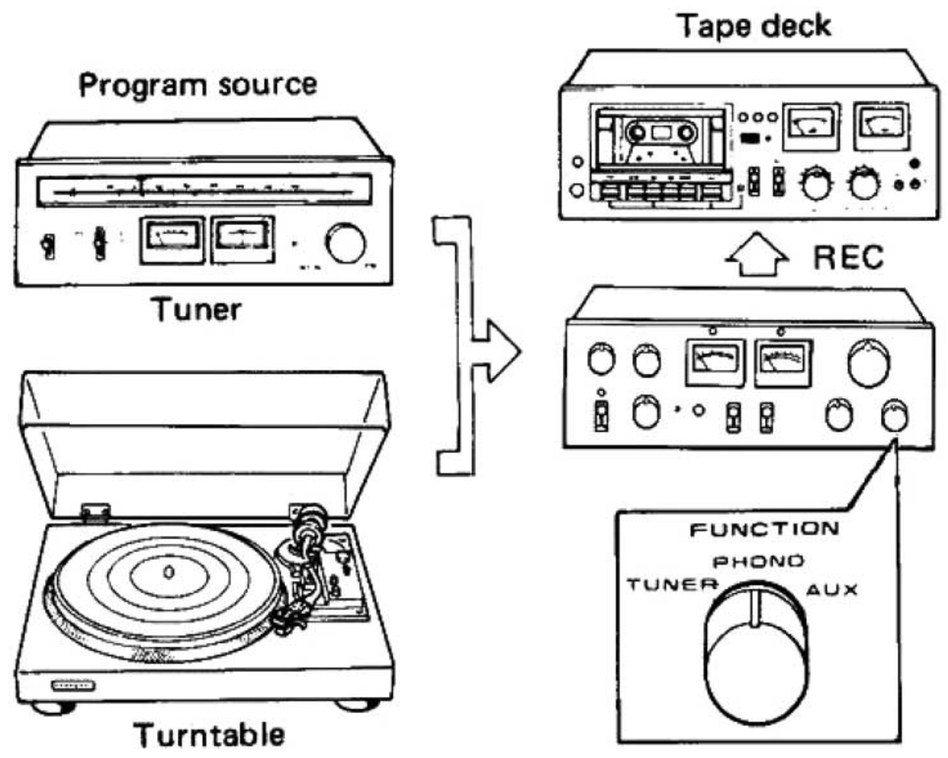

Fig. 8

NOTES:
1. Adjust the recording level with the tape deck's recording level controls.
2. The amplifier's VOLUME, BASS and TREBLE controls have no affect on the recorded sound when a recording is being made.

USING THE AUX INPUT JACKS

You can connect an 8-track cartridge tape player, TV tuner, second tuner or tape deck playback output to these jacks. See Fig. 9.

1. Set the FUNCTION switch to AUX.
2. Operate the audio component which you have connected to the AUX jacks.
3. Adjust the VOLUME, BASS and TREBLE controls for the listening level and tone quality of your preference.

You can use the AUX jacks to duplicate a pre-recorded tape

If you have two tape decks, a recording of, say, a complete FM broadcast can be made and then those items that you want for your permanent "tape library" can be selected and re-recorded onto another tape. It is also possible to duplicate tapes from an open-reel tape deck onto a cassette tape deck.

1. As shown in Fig. 10, connect the tape deck for the playback to the AUX jacks, and connect the tape deck for the recording to the TAPE REC jacks.
2. Set the FUNCTION switch to AUX.
3. Play back the tape on the tape deck connected to the AUX jacks and record the program onto the tape deck connected to the TAPE jacks.

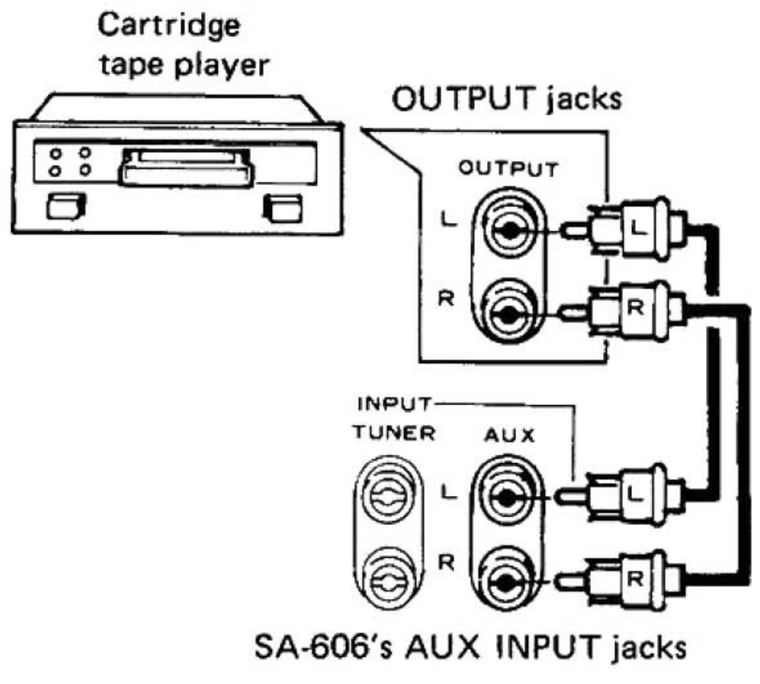

Fig. 9

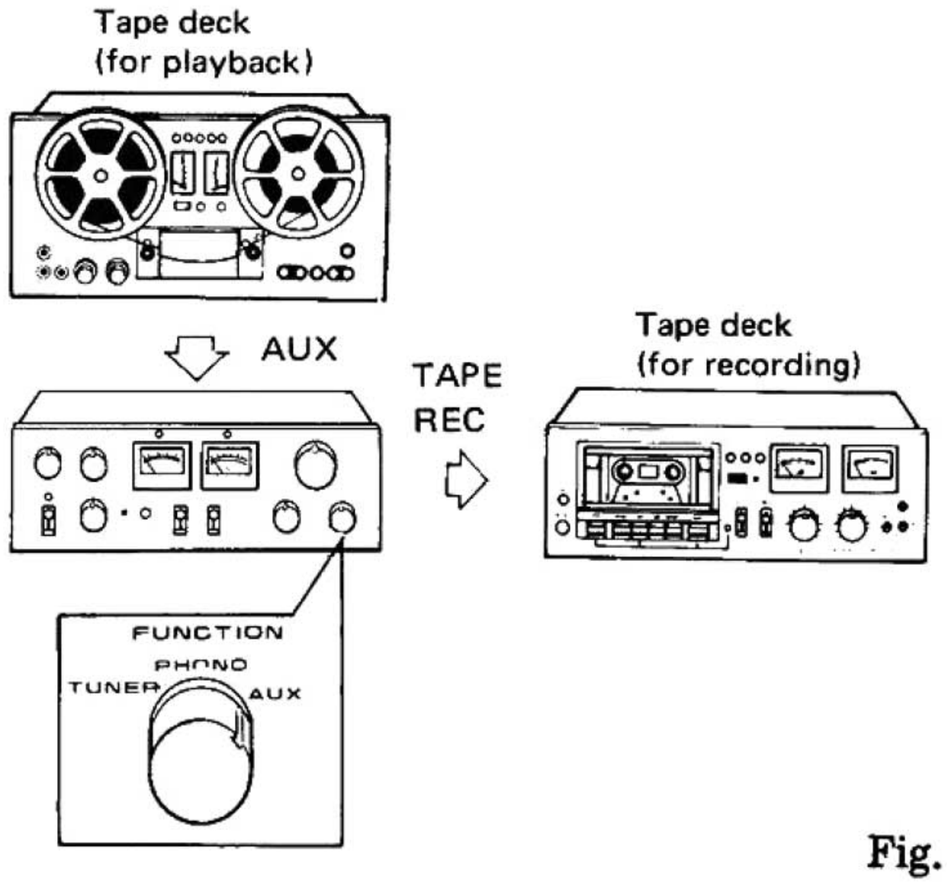

Fig. 10

www.hifiengine.com

CONDITIONS FREQUENTLY MISTAKEN FOR MALFUNCTION

Most cases of operating difficulty can be attributed to simple causes, such as faulty connections or incorrect operation. If the problem cannot be corrected with reference to the following chart, turn off the power and contact your nearest Pioneer Authorized Service Center.

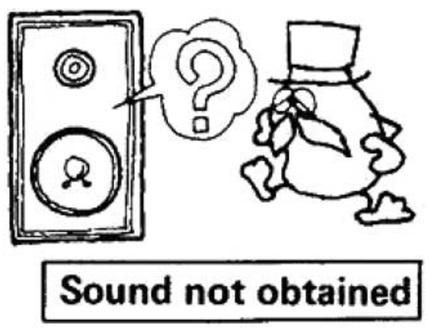

Sound not obtained

Operation correct?

Turntable

Tuner

FUNCTION
switch position?

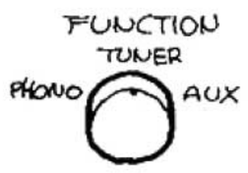

Headshell
correctly installed?

SA-606

Tape deck

- Operation correct?
- Is sound recorded on tape?

TAPE
MONITOR

ON

Meters deflect?

TAPE MONITOR
switch position?

Record contaminated
or damaged?

Turntable

Tuner

Amateur radio station
audible (contact service)

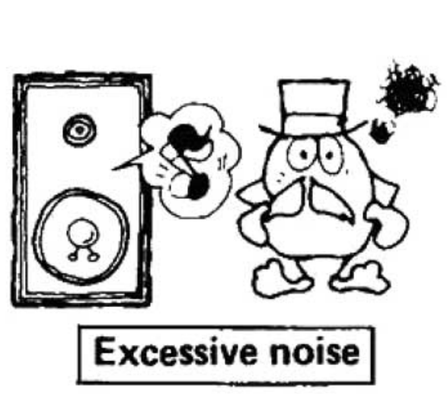

Excessive noise

Station properly
tuned in?

SA-606

Connect
ground lead

Tape deck

- Correctly installed?
- Stylus worn or damaged?

- Output level too high
- Distorted sound
recorded on tape?
- Noisy signal recorded
on tape?

Ground connection to
earth if possible

Interference from other
electrical appliances

www.hifiengine.com

SPECIFICATIONS

Semiconductors

ICs 2
Transistors 25
Diodes 27

Amplifier Section

Circuitry . . . . . 1-st stage current mirror loaded differential amplifier, constant current loaded all-stage direct-coupled OCL.

Continuous power output of 40watts* per channel, min., at 8ohms from 20Hertz to 20,000 Hertz with no more than 0.05% total harmonic distortion.

Continuous Power Output at 1kHz (both channels driven)
T.H.D. 0.05%, 8 ohms . . . . . 45 watts per channel
Total Harmonic Distortion (20Hertz to 20,000Hertz, from AUX)
continuous rated power output . . . No more than 0.05%
20 watts per channel power output, 8 ohms
. . . . . No more than 0.03%
1 watt per channel power output, 8 ohms
. . . . . No more than 0.03%
Intermodulation Distortion (50Hertz: 7,000Hertz = 4 : 1 from AUX)
continuous rated power output
. . . . . No more than 0.05%
20 watts per channel power output, 8 ohms
. . . . . No more than 0.02%
1 watt per channel power output, 8 ohms
. . . . . No more than 0.02%

Output
Speaker . . . . . A, B, A+B
Damping Factor
(20Hertz to 20,000Hertz, 8 ohms) 30
Input (Sensitivity/Impedance)
PHONO . . . . . 2.5mV/50 kilohms
TUNER . . . . . 150mV/50 kilohms
AUX . . . . . 150mV/50 kilohms
TAPE PLAY . . . . . 150mV/50 kilohms
TAPE PLAY (DIN connector) . . . . 150mV/50 kilohms
(HG model only)
Phono Overload Level (T.H.D. 0.05%, 1kHz)
PHONO 180mV
Output (Level/Impedance)
TAPE REC 150mV
TAPE REC (DIN connector) . . . . . 30mV/80 kilohms
(HG model only)

Frequency Response
PHONO (RIAA Equalization); 20Hz to 20,000Hz±0.3dB
TUNER, AUX, TAPE PLAY . . 20Hz to 40,000Hz±2dB

Tone Control
BASS . . . . . +12dB, −10dB (100Hz)
TREBLE . . . . . +10dB, −10dB (10kHz)
Loudness Contour (Volume control set at −40dB position)
. . . . . +6dB (100Hz), +3dB (10kHz)
Hum and Noise (IHF, short-circuited, A network)
PHONO 78dB
TUNER, AUX, TAPE PLAY 95dB
Hum and Noise (DIN, continuous power/50 mW)
PHONO 66dB/58dB
AUX 85dB/60dB

Miscellaneous

Power Requirements
. . . . . AC 110/120/220/240V (switchable), 50/60Hz (S model)
AC 220/240V (switchable), 50/60Hz (HG model)
Power Consumption . . . . . 420W (max.)
(HG model only)
100W
(S model only)
Dimensions . . . . . 420(W)x147(H)x261(D) mm
16-9/16(W)x5-13/16(H)x12-7/8(D) in
Weight . . . . . Without package; 7.5kg (16 lb 9 oz)
With package; 8.5kg (18 lb 12 oz)

Furnished Parts

Fuse 2A 1
(S model only)
3A 1
(S model only)
Operating instructions 1

Measured pursuant to Federal Trade Commission's Trade Regulation rule on Power Output Claims for Amplifiers.

NOTE:
Specifications and the design subject to possible modification without notice due to improvements.

www.hifiengine.com

IMPORTANT—LINE VOLTAGE

The LINE VOLTAGE SELECTOR switch has been set according to the local AC power line supply in the area of use. Before operating your unit, be sure to confirm that this switch has been set properly. If necessary to change the switch setting, perform according to the steps below.

S MODELS (110V—120V—220V—240V)

1. Disconnect the AC mains cord.
2. Use Phillips screwdriver to unscrew fuse cap, then take out fuse and SELECTOR plug (Fig. A).
3. Reinstall the SELECTOR plug so that its cut out section exposes the voltage indication of the SELECTOR socket which corresponds to your household AC power line.
4. Refer to table and install replacement fuse (provided as accessory).
5. Insert fuse in fuse cap, then install cap to plug and tighten.

HG MODELS (220V—240V)

1. Disconnect the AC mains cord.
2. Use Phillips screwdriver to loosen mounting screw, then remove SELECTOR plug (See Fig. B).
3. Reinstall the SELECTOR plug with its cut out section exposing the correct voltage indication.
4. Insert and tighten mounting screw.

S model

TABLE

VOLTAGE	FUSE
110V, 120V	3A
220V, 240V	2A

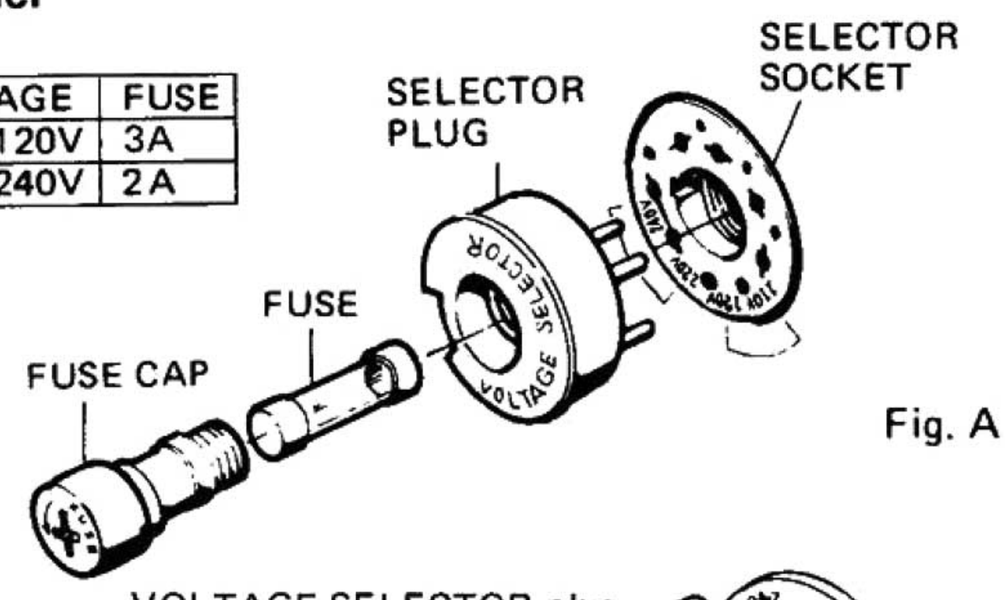

Fig. A

HG model

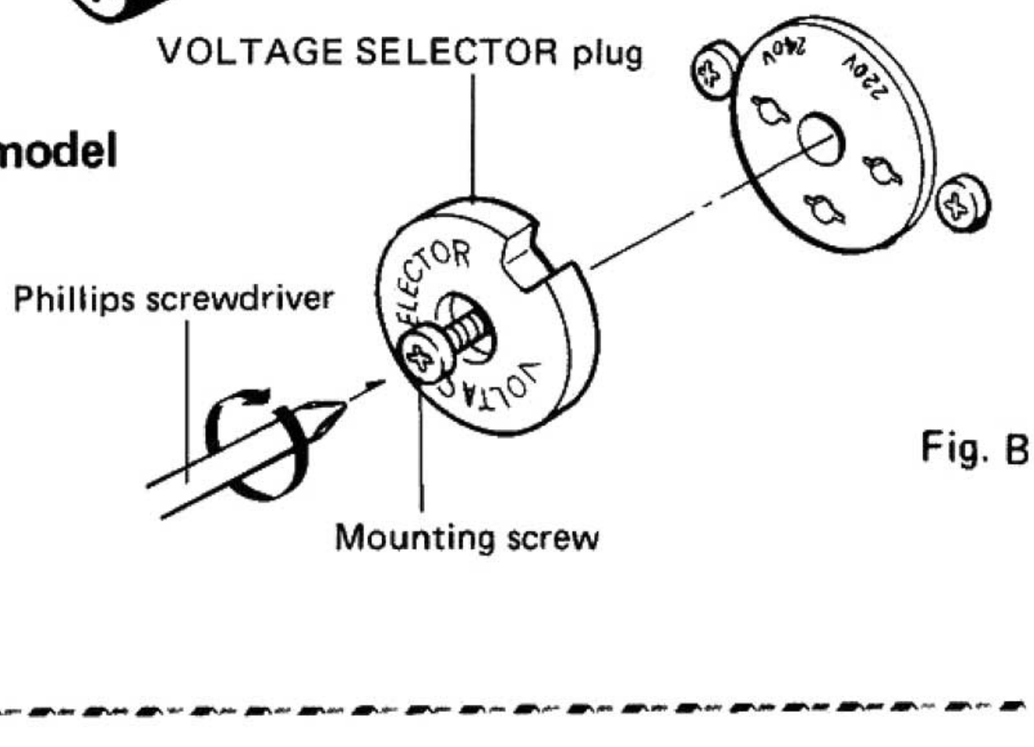

Fig. B

FOR USE IN UNITED KINGDOM OR AUSTRALIA

CAUTION 240V

Mains supply voltage is factory adjusted at 240 volts.

WARNING

THIS APPARATUS MUST BE EARTHED.

IMPORTANT

The wires in this mains lead are coloured in accordance with the following code:

Green-and-Yellow: Earth
Blue: Neutral
Brown: Live

As the colours of the wires in the mains lead of this apparatus may not correspond with the coloured markings identifying the terminals in your plug proceed as follows.

The wire which is coloured green-and-yellow must be connected to the terminal in the plug which is marked by the letter E or by the safety earth symbol ⏚ or coloured green or green-and-yellow.

The wire which is coloured blue must be connected to the terminal which is marked with the letter N or coloured blue or black.

The wire which is coloured brown must be connected to the terminal which is marked with the letter L or coloured brown or red.

The power cord should be connected last, make sure that the power switch is off. First insert the female appliance connector of the mains cord into the AC INLET, then plug the cord to the wall socket. Be sure the appliance connector is fully inserted into the AC INLET. Unplug the set from the wall socket when it is not be used for an extended period of time.

FOR YOUR SAFETY

1. Insert this plug only into effectively earthed three-pin plug-socket outlet.
2. If any doubt exists regarding the earthing, consult a qualified electrician.
3. Extension cords, if used, must be three-core correctly wired.

PIONEER ELECTRONIC CORPORATION 4-1, Meguro 1-Chome, Meguro-ku, Tokyo 153, Japan
U.S. PIONEER ELECTRONICS CORPORATION 85 Oxford Drive, Moonachie, New Jersey 07074, U.S.A.
PIONEER ELECTRONIC (EUROPE) N.V. Luithagen-Haven 9, 2030 Antwerp, Belgium
PIONEER ELECTRONICS AUSTRALIA PTY. LTD. 178-184 Boundary Road, Braeside, Victoria 3195, Australia

<78K06F7B14> Printed in Japan <ARB-258-A>

www.hifiengine.com

STEREO AMPLIFIER

SA-606

S
S/G

PIONEER

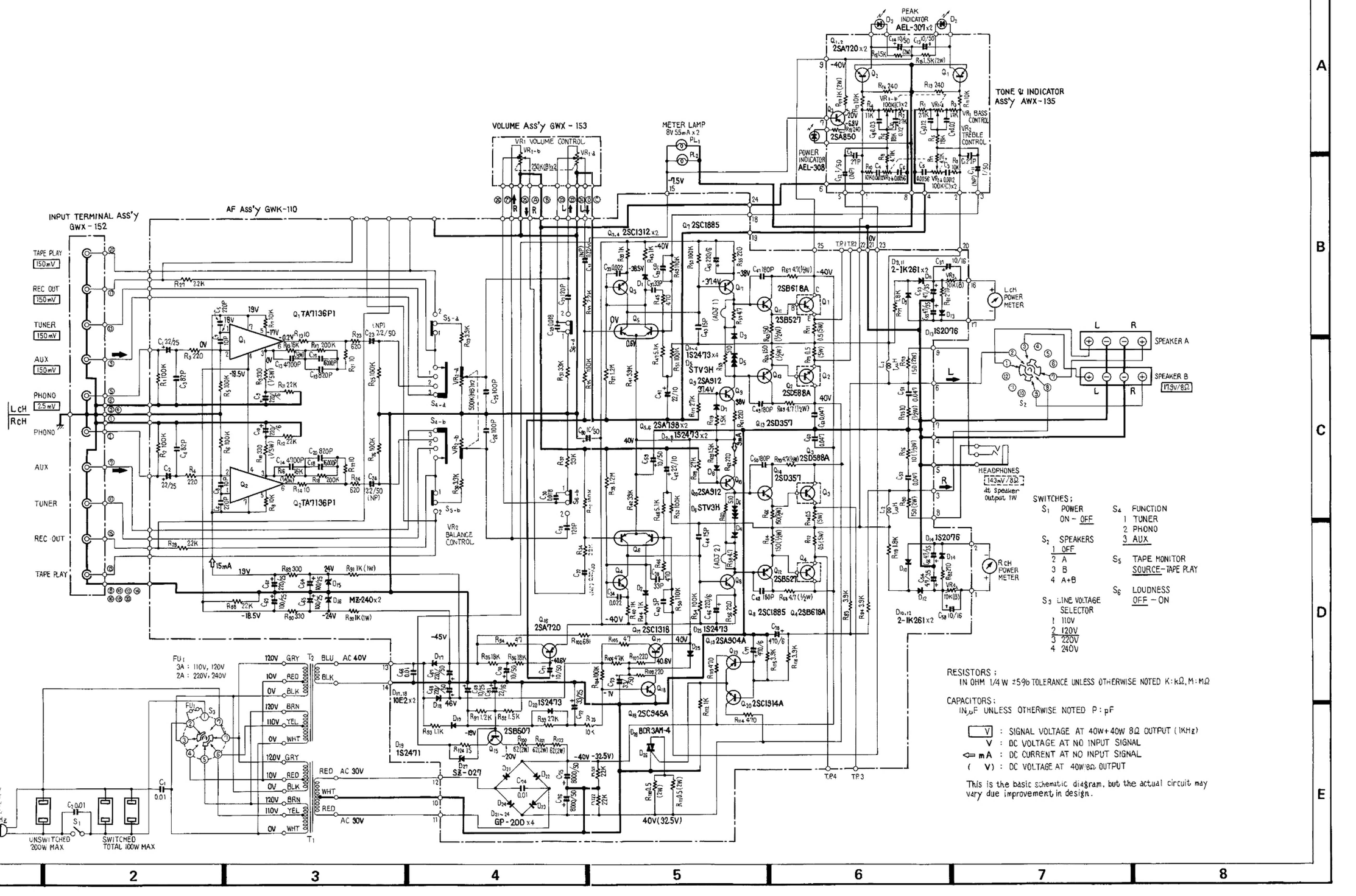

SWITCHES;

S_1	POWER ON – OFF	S_4	FUNCTION 1 TUNER 2 PHONO 3 AUX
S_2	SPEAKERS 1 OFF 2 A 3 B 4 A+B	S_5	TAPE MONITOR SOURCE–TAPE PLAY
S_3	LINE VOLTAGE SELECTOR 1 110V 2 120V 3 220V 4 240V	S_6	LOUDNESS OFF – ON

RESISTORS;
IN OHM 1/4 W ±5% TOLERANCE UNLESS OTHERWISE NOTED K:kΩ, M:MΩ

CAPACITORS;
IN μF UNLESS OTHERWISE NOTED P:pF

[V] : SIGNAL VOLTAGE AT 40W+40W 8Ω OUTPUT (1KHz)
V : DC VOLTAGE AT NO INPUT SIGNAL
⇦mA : DC CURRENT AT NO INPUT SIGNAL
(V) : DC VOLTAGE AT 40W/8Ω OUTPUT

This is the basic schematic diagram, but the actual circuit may vary due improvement in design.

STEREO AMPLIFIER

SA-606 HG

PIONEER

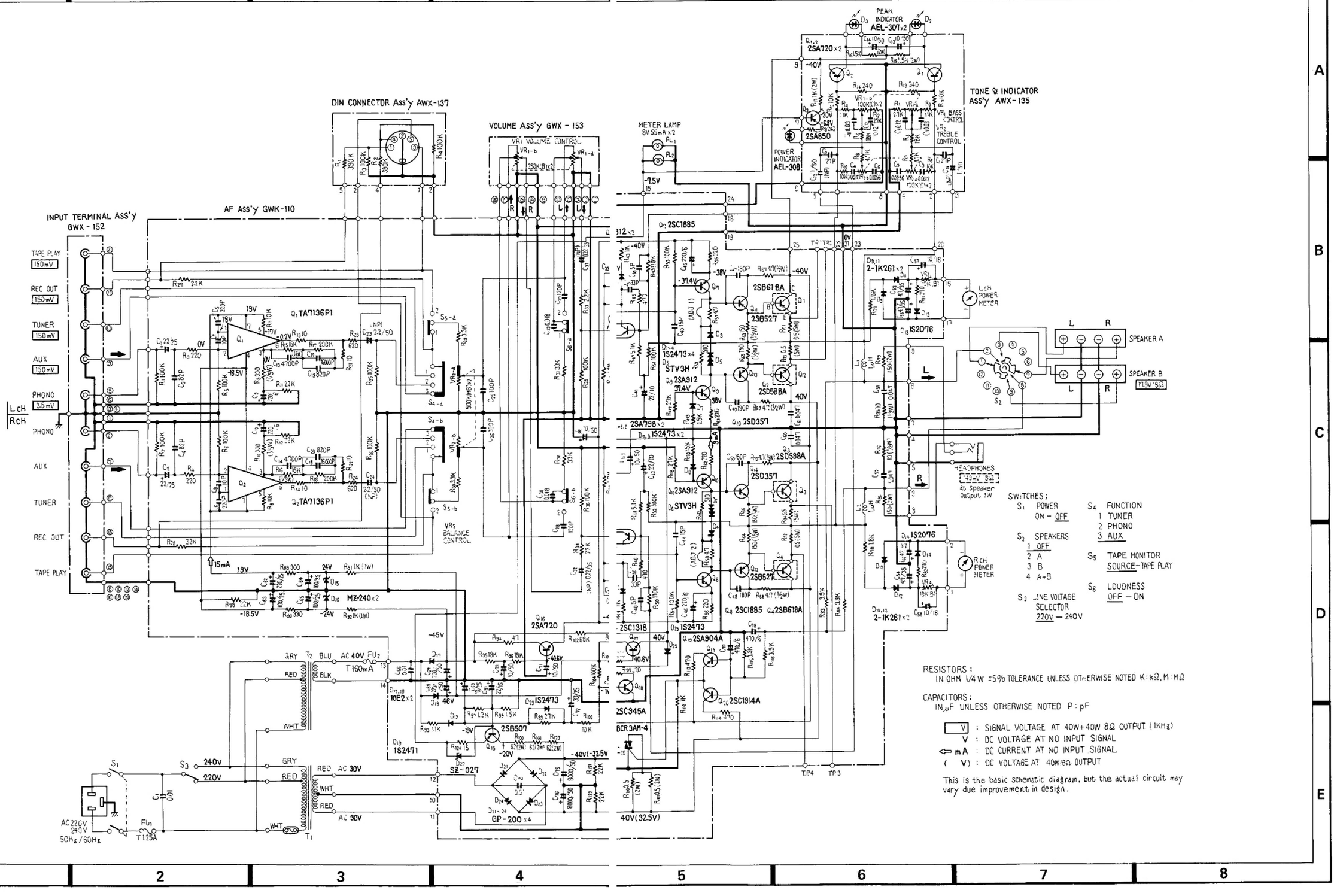

RESISTORS:
IN OHM 1/4 W ±5% TOLERANCE UNLESS OTHERWISE NOTED K: kΩ, M: MΩ

CAPACITORS:
IN μF UNLESS OTHERWISE NOTED P: pF

- V : SIGNAL VOLTAGE AT 40W+40W 8Ω OUTPUT (1KHz)
- V : DC VOLTAGE AT NO INPUT SIGNAL
- ⇦ mA : DC CURRENT AT NO INPUT SIGNAL
- (V) : DC VOLTAGE AT 40W/8Ω OUTPUT

This is the basic schematic diagram, but the actual circuit may vary due improvement in design.

COMPONENT CONNECTION GUIDE

BASIC CONNECTIONS I

PIONEER®

When using the SA-606 or SA-506 stereo amplifier

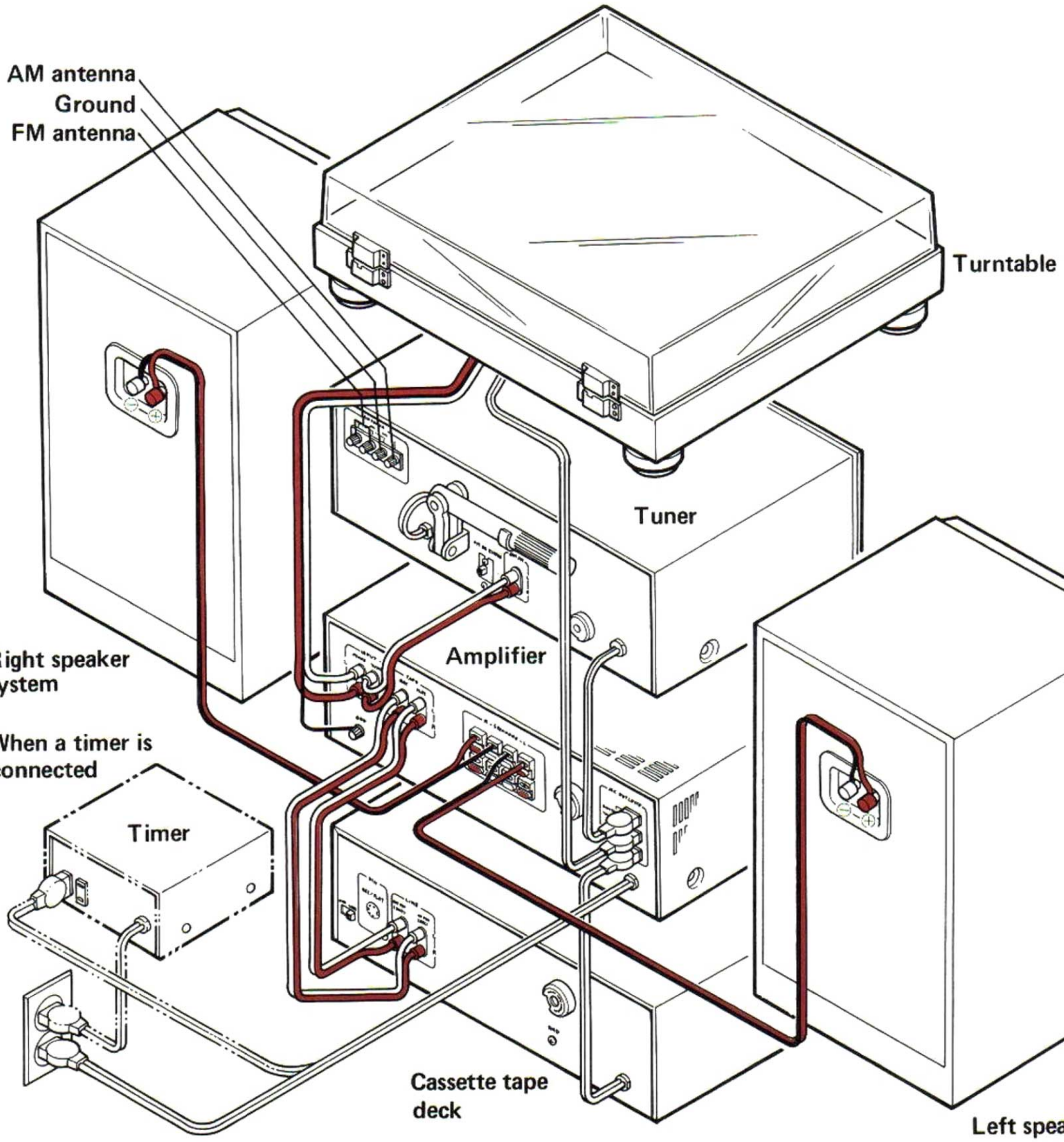

Power cord
After you have finished connecting all the components, plug the power cord of the stereo amplifier into the AC wall socket.

- When connecting the cords, always make sure you set the power switches on all the components to OFF and unplug the power cord of the stereo amplifier from the AC household wall socket.
- For further details on connections, refer to the Operating Instructions of each of the components concerned.

www.hifiengine.com

BASIC CONNECTIONS II

PIONEER®

When using the SA-5500II stereo amplifier

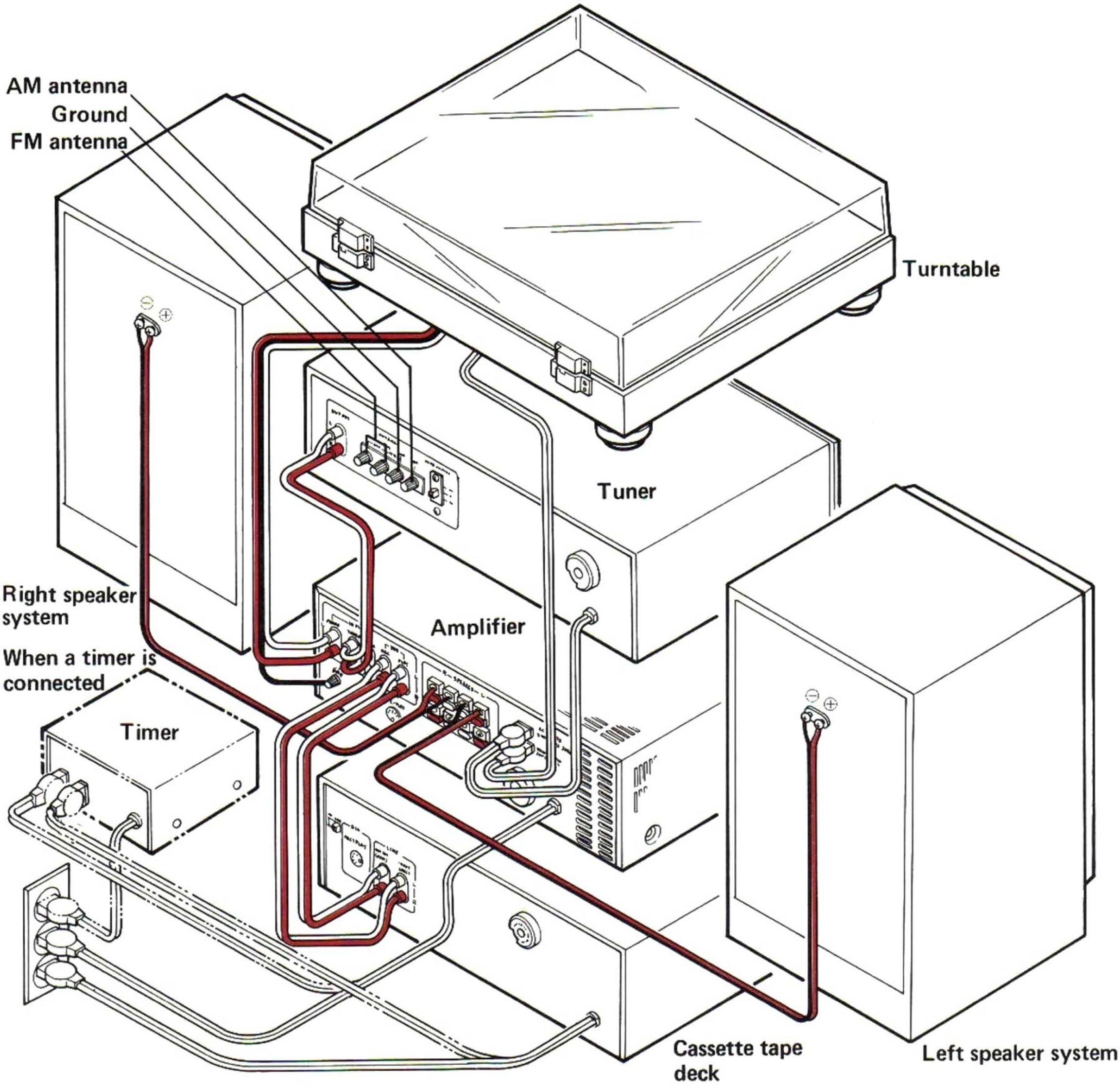

Power cord
After you have finished connecting all the components, plug the power cord of the stereo amplifier into the AC wall socket.

- When connecting the cords, always make sure you set the power switches on all the components to OFF and unplug the power cord of the stereo amplifier from the AC household wall socket.
- For further details on connections, refer to the Operating Instructions of each of the components concerned.

www.hifiengine.com