Nakamichi

Service Manual

Nakamichi 670ZX

Discrete Head Cassette Deck



CONTENTS

1. General **3**
2. Removal Procedures **5**
2. 1. Side Panel Ass'y 5
2. 2. Top Cover Ass'y 5
2. 3. Bottom Cover Ass'y 5
2. 4. Cassette Case Cover Ass'y and Azimuth Alignment Cover Ass'y 5
2. 5. Front Panel Ass'y 5
2. 6. Headphone Jack Ass'y 5
2. 7. Mechanism Ass'y 5
2. 8. Level Meter 6
2. 9. Auto Azimuth P.C.B. Ass'y 6
2. 10. Logic P.C.B. Ass'y 6
2. 11. Switch P.C.B. Ass'y 6
2. 12. Main P.C.B. Ass'y 6
2. 13. Volume P.C.B. Ass'y 6
2. 14. Record Cal. P.C.B. Ass'y 6
2. 15. Power Switch 6
2. 16. Lamp P.C.B. B Ass'y and Lamp P.C.B. C Ass'y 6
2. 17. Control Switch P.C.B. Ass'y 7
2. 18. RAMM P.C.B. Ass'y 7
2. 19. Rear Panel Ass'y 7
2. 20. Power Transformer and Fuse P.C.B. Ass'y 7
2. 21. Cassette Case Ass'y and Cover Plate Ass'y 7
2. 22. Tape Counter Ass'y, Memory Switch and Pitch Control Volume 7
2. 23. Capstan Motor Ass'y and Flywheel Ass'y 7
2. 24. Sub Mechanism Chassis Ass'y 7
2. 25. Control Motor Ass'y and Reel Motor Ass'y 7
2. 26. Cam Control Volume 8
2. 27. Azimuth Motor Ass'y 8
2. 28. Reel Hub Ass'y and Idler Ass'y 8
2. 29. Cam Drive Gear and Control Cam 8
2. 30. Head Mount Base Ass'y 9
2. 31. Pressure Roller Ass'y and Erase Head 9
2. 32. Playback Head Ass'y and Record Head Ass'y 9
3. Measurement Instruments **10**
4. Mechanical Adjustments **11**
4. 1. Mechanism Control Cam Adjustment 11
4. 2. Tape Speed Adjustment 12
4. 3. Record Head and Playback Head Tilt Adjustment 13
4. 4. Head Base Stroke Adjustment in Play and Cue Modes 14
4. 5. Tape Guides Adjustment and Erase Head Stroke Adjustment 15
4. 6. Erase Head Height and Tilt Adjustment 15
4. 7. Back Tension Adjustment 16
4. 8. Playback Head and Record Head Height Adjustment and Azimuth Alignment 18
4. 9. Record Head Stroke Adjustment 19
4. 10. Tape Travelling Adjustment 20
4. 11. Flywheel Holder Adjustment 20
4. 12. Lubrication 20
5. Parts Location for Electrical Adjustment **21**
6. Electrical Adjustments and Measurements **22**
6. 1. Adjustment and Measurement Instructions 22
6. 2. Frequency Response Adjustment 27
6. 3. Dolby NR Circuit Check 28
7. Mounting Diagrams **28**
7. 1. Control Switch P.C.B. Ass'y 28
7. 2. Lamp P.C.B. B Ass'y 28

7. 3. Lamp P.C.B. C Ass'y 28
7. 4. RAMM P.C.B. Ass'y 28
7. 5. Fuse P.C.B. Ass'y 29
7. 6. Auto Azimuth P.C.B. Ass'y 30
7. 7. Pin Jack P.C.B. Ass'y 30
7. 8. Auto Shut-off P.C.B. Ass'y 30
7. 9. Switch P.C.B. Ass'y 31
7. 10. Record Cal. P.C.B. Ass'y 31
7. 11. Volume P.C.B. Ass'y 31
7. 12. Main P.C.B. Ass'y 33
7. 13. Logic P.C.B. Ass'y 35
8. Mechanism Ass'y and Parts List 37
8. 1. Synthesis 37
8. 2. Front Panel Ass'y (A01) 40
8. 3. Mechanism Ass'y 670ZX (A02) 41
8. 4. Chassis Ass'y (A03) 44
8. 5. Front Panel Escutcheon Ass'y (B01) 44
8. 6. Control Button Ass'y (B02) 44
8. 7. Flywheel Holder Ass'y (C01) 44
8. 8. Sub Mechanism Chassis Ass'y (C02) 45
8. 9. Main Mechanism Chassis Ass'y (C03) 48
8. 10. Record Calibration Ass'y (D01) 53
8. 11. Volume Holder Ass'y (D02) 53
8. 12. Headphone Jack Ass'y (D03) 53
8. 13. Reflector Ass'y (D04) 53
8. 14. Counter Lamp Ass'y (D05) 53
8. 15. Power Switch Holder Ass'y (D06) 53
8. 16. Rear Panel Ass'y (D07) 54
8. 17. Reel Motor Ass'y (E01) 56
8. 18. Control Motor Ass'y (E02) 56
8. 19. Azimuth Alignment Motor Ass'y (E03) 56
8. 20. Head Mount Base Ass'y (F01) 56
8. 21. Supply Pressure Roller Ass'y (F02) 56
8. 22. Take-up Pressure Roller Ass'y (F03) 56
8. 23. Head Base Ass'y D (F04) 56
8. 24. Cassette Case Holder L Ass'y (F05) 56
8. 25. Cassette Case Holder R Ass'y (F06) 56
8. 26. Auto Shut-off Ass'y (F07) 57
8. 27. Pneumatic Damper Ass'y (F08) 57
8. 28. Pitch Control Holder Ass'y (F09) 57
8. 29. Azimuth Motor Ass'y (G01) 57
8. 30. P-8L Playback Head Ass'y (H01) 57
8. 31. R-8L Record Head Ass'y (H02) 57
9. Overall Timing Chart 58
10. Eq. Amp. Frequency Response 58
10. 1. Playback Frequency Response 58
10. 2. Record Current Frequency Response 58
11. Block Diagrams 59
11. 1. Amplifier 59
11. 2. Mechanism Control 60
12. Wiring Diagram 61
13. Schematic Diagrams 63
13. 1. Amplifier 63
13. 2. Mechanism Control 64
14. Specifications 65

1.1. Control Functions

Nakamichi 670ZX control functions are shown below:

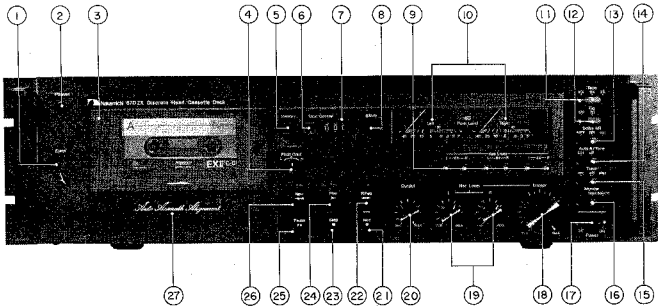

Fig. 1.1 Front View

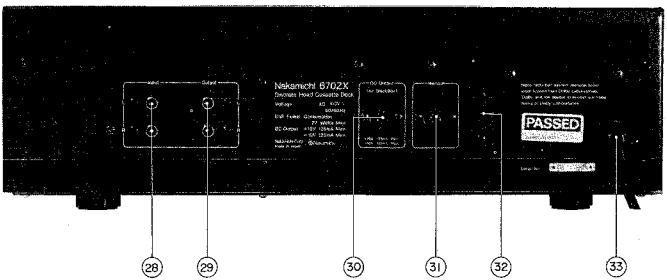

Fig. 1.2 Rear View

1. Eject Lever
2. Headphone Jack
3. Cassette Holder (with see-thru cover)
4. Pitch Control
5. Tape Start Memory Switch
6. Counter Reset Button
7. Tape Counter
8. RAMM Display
9. Record Calibration Controls
10. Peak Level Meters
11. Tape Switch (EX/SX/ZX)
12. Eq. Switch (120 μs/70 μs)
13. Dolby NR/MPX Filter Switch
14. Auto. A/Tone Switch
15. Timer Switch
16. Monitor Switch
17. Power Switch
18. Master Input Level Control
19. Input Level Controls
20. Output Level Control
21. Record Button
22. Fast-Forward Button
23. Stop Button
24. Play Button
25. Pause Button
26. Rewind Button
27. Auto Azimuth Alignment Cover
28. Input Jacks
29. Output Jacks
30. DC Output Jack
31. Remote Control Socket
32. Voltage Selector
33. Power Cord

1.2. Voltage Selector

Voltage selector is installed on the rear panel for other versions of the Nakamichi 670ZX.
This voltage selector can select either 120 V or 220 – 240 V at customer's disposal.

2. REMOVAL PROCEDURES

2.1. Side Panel Ass'y

Refer to Fig. 2.1.

Remove F01 and F02, then disassemble F03 (Side Panel Ass'y).

2.2. Top Cover Ass'y

Refer to Fig. 2.1.

(1) Remove Side Panel Ass'y referring to item 2.1.

(2) Remove F04 and F05, then disassemble F06 (Top Cover Ass'y).

2.3. Bottom Cover Ass'y

Refer to Fig. 2.1.

Remove F07, then disassemble F08 (Bottom Cover Ass'y).

2.4. Cassette Case Cover Ass'y and Azimuth Alignment Cover Ass'y

Refer to Fig. 2.1.

(1) Turn fully counterclockwise two screws which are mounted on the Cassette Case Cover, then disassemble F09 (Cassette Case Cover Ass'y).

(2) Turn fully counterclockwise two screws which are mounted on the Front Panel Escutcheon Ass'y, then disassemble F10 (Azimuth Alignment Cover Ass'y).

2.5. Front Panel Ass'y

Refer to Fig. 2.2.

(1) Refer to Fig. 2.1. Remove Top Cover Ass'y and Bottom Cover Ass'y referring to items 2.2 and 2.3.

(2) Pull out F01 (Volume Knob A), F02 (Volume Knob B) and F03 (Pitch Control Knob).

(3) Remove F04, F05 and F06, then disassemble F07 (Front Panel Ass'y including 3 connectors).

2.6. Headphone Jack Ass'y

Refer to Fig. 2.2.

(1) Remove Front Panel Ass'y referring to item 2.5.

(2) Remove F08, then disassemble F09 (Headphone Jack Ass'y).

2.7. Mechanism Ass'y

Refer to Fig. 2.2.

(1) Remove Front Panel Ass'y referring to item 2.5.

(2) Remove F10, then disassemble F11 (Mechanism Ass'y including 7 connectors).

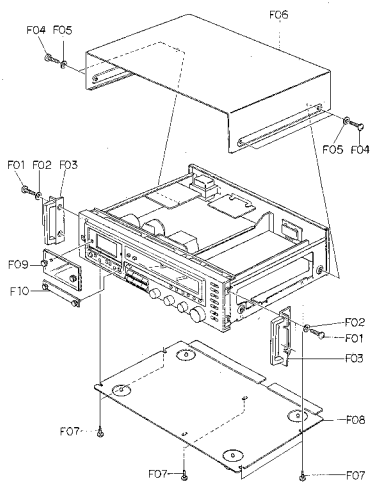

Fig. 2.1

2.8. Level Meter
Refer to Fig. 2.3.
(1) Refer to Fig. 2.2. Remove Front Panel Ass'y referring to item 2.5.
(2) Remove F01, then disassemble F02 (Level Meter Holder) and F03 (Level Meter).

2.9. Auto Azimuth P.C.B. Ass'y
Refer to Fig. 2.3.
(1) Refer to Fig. 2.2. Remove Front Panel Ass'y referring to item 2.5.
(2) Remove one connector and the wires connected by wrapping.
(3) Remove F04, then disassemble F05 (Auto Azimuth P.C.B. Ass'y).

2.10. Logic P.C.B. Ass'y
Refer to Fig. 2.3.
(1) Refer to Fig. 2.2. Remove Front Panel Ass'y referring to item 2.5.
(2) Remove 7 connectors and the wires connected by wrapping from F07 (Logic P.C.B. Ass'y).
(3) Remove F06, then disassemble F07 (Logic P.C.B. Ass'y).

2.11. Switch P.C.B. Ass'y
Refer to Fig. 2.3.
(1) Refer to Fig. 2.2. Remove Front Panel Ass'y referring to item 2.5.
(2) Pull out F08 (Function Switch Knob Ass'y).
(3) Remove the Flat Cables, connector and wires connected by wrapping from F11 (Switch P.C.B. Ass'y).
(4) Remove F09 and F10, then disassemble F11 (Switch P.C.B. Ass'y).

2.12. Main P.C.B. Ass'y
Refer to Fig. 2.3.
(1) Remove Level Meter and Switch P.C.B. Ass'y referring to items 2.8 and 2.11.
(2) Remove the Flat Cables, 3 connectors and wires connected by wrapping from F13 (Main P.C.B. Ass'y).
(3) Remove F12, then disassemble F13 (Main P.C.B. Ass'y).

2.13. Volume P.C.B. Ass'y
Refer to Fig. 2.3.
(1) Remove Level Meter referring to item 2.8.
(2) Remove F14 and the Flat Cable from F15 (Volume P.C.B. Ass'y), then disassemble F15 (Volume P.C.B. Ass'y).

2.14. Record Cal. P.C.B. Ass'y
Refer to Fig. 2.3.
(1) Refer to Fig. 2.2. Remove Front Panel Ass'y referring to item 2.5.
(2) Remove F16, then disassemble F17 (Calibration Case Ass'y).
(3) Remove F18, then disassemble F19 (Record Cal. P.C.B. Ass'y).

2.15. Power Switch
Refer to Fig. 2.3.
(1) Refer to Fig. 2.2. Remove Front Panel Ass'y referring to item 2.5.
(2) Remove F20, then disassemble F21 (Power Switch Knob).
(3) Remove F22, then disassemble F23 (Power Switch Holder Ass'y).
(4) Remove F24, then disassemble F25 (Power Switch).

2.16. Lamp P.C.B. B Ass'y and Lamp P.C.B. C Ass'y
Refer to Fig. 2.3.
(1) Refer to Fig. 2.2. Remove Front Panel Ass'y referring to item 2.5.
(2) Remove F26, then disassemble F27 (Insulator) and F28 (Lamp P.C.B. B Ass'y).
(3) Remove F29 (Lamp P.C.B. C Ass'y) by releasing the self-interlocking pin of the Reflector.

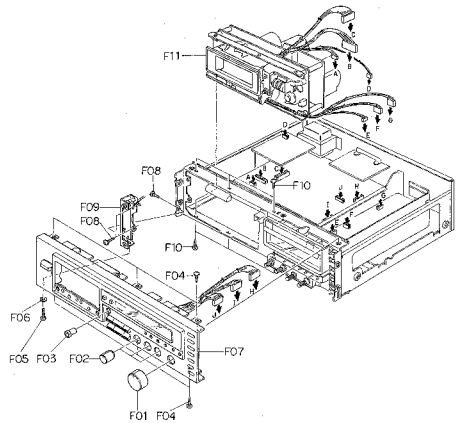

Fig. 2.2

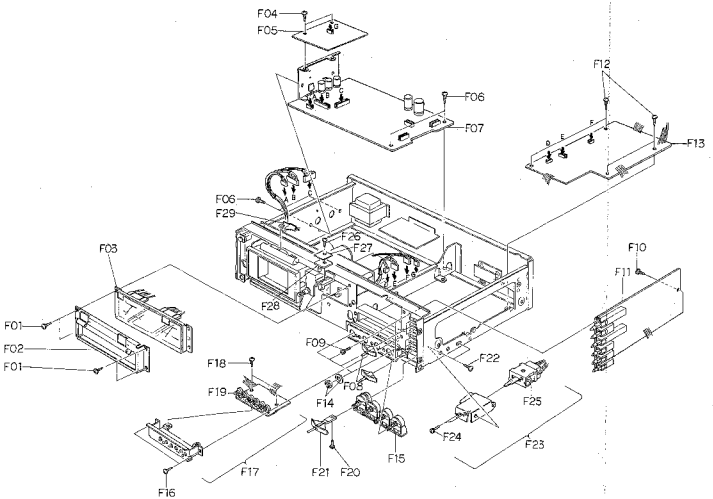

Fig. 2.3

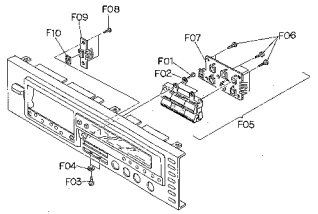

Fig. 2.4

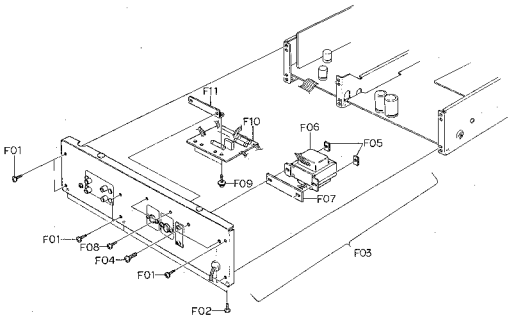

Fig. 2.5

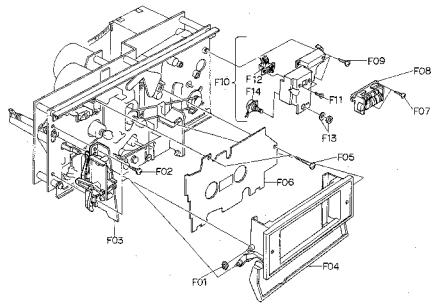

Fig. 2.6

2.17. Control Switch P.C.B. Ass'y

Refer to Fig. 2.4.

(1) Refer to Fig. 2.2. Remove Front Panel Ass'y referring to item 2.5.
(2) Remove F01, F02, F03 and F04, then disassemble F05 (Control Button Ass'y).
(3) Remove F06, then disassemble F07 (Control Switch P.C.B. Ass'y).

2.18. RAMM P.C.B. Ass'y

Refer to Fig. 2.4.

(1) Refer to Fig. 2.2. Remove Front Panel Ass'y referring to item 2.5.
(2) Remove F08, then disassemble F09 (RAMM P.C.B. Ass'y) and F10 (LED Filter).

2.19. Rear Panel Ass'y

Refer to Fig. 2.5.

(1) Refer to Fig. 2.1. Remove Top Cover Ass'y and Bottom Cover Ass'y referring to items 2.2 and 2.3.
(2) Remove F01 and F02, then disassemble F03 (Rear Panel Ass'y).

2.20. Power Transformer and Fuse P.C.B. Ass'y

Refer to Fig. 2.5.

(1) Refer to Fig. 2.1. Remove Top Cover Ass'y and Bottom Cover Ass'y referring to items 2.2 and 2.3.
(2) Remove F04 and F05, then disassemble F06 (Power Transformer) and F07 (Transformer Plate).
(3) Remove F08 and F09, then disassemble F10 (Fuse P.C.B. Ass'y).

2.21. Cassette Case Ass'y and Cover Plate Ass'y

Refer to Fig. 2.6.

(1) Refer to Fig. 2.2. Remove Mechanism Ass'y referring to item 2.7.
(2) Press the Eject Button to open the Cassette Case Ass'y.
(3) Remove F01 and F02, then disassemble F03 (Cassette Case Holder L Ass'y) by releasing the self-interlocking pin of the Damper Lock Arm and F04 (Cassette Case Ass'y).
(4) Remove F05, then disassemble F06 (Cover Plate Ass'y).

2.22. Tape Counter Ass'y, Memory Switch and Pitch Control Volume

Refer to Fig. 2.6.

(1) Refer to Fig. 2.2. Remove Mechanism Ass'y referring to item 2.7.
(2) Remove F07, then disassemble F08 (Tape Counter Ass'y).
(3) Remove F09, then disassemble F10 (Pitch Control Holder Ass'y).
(4) Remove F11, then disassemble F12 (Memory Switch).
(5) Remove F13, then disassemble F14 (Pitch Control Volume).

2.23. Capstan Motor Ass'y and Flywheel Ass'y

Refer to Fig. 2.7.

(1) Refer to Fig. 2.2. Remove Mechanism Ass'y referring to item 2.7.
(2) Remove F01 and F02, then disassemble F03 (Flywheel Holder Ass'y) and F08 (Capstan Belt).
(3) Remove F04, then disassemble F05 (Capstan Motor Ass'y).
(4) Remove F06, then disassemble F07 (Speed Cal. P.C.B. Ass'y).
(5) Remove F09 (Supply Flywheel Ass'y), then disassemble F10 (Take-up Flywheel Ass'y).
(6) After removing both Flywheel Assemblies, disassemble F11 (Thrust Washer 3 mm), F12 (Thrust Washer 2.6 mm), F13 (Flange Thrust Cap) and F14 (Thrust Spring).

2.24. Sub Mechanism Chassis Ass'y

Refer to Fig. 2.8.

(1) Remove Flywheel Holder Ass'y referring to item 2.23.
(2) Remove F01 and F02, then disassemble F03 (Sub Mechanism Chassis Ass'y).

2.25. Control Motor Ass'y and Reel Motor Ass'y

Refer to Fig. 2.8.

(1) Remove Sub Mechanism Chassis Ass'y referring to item 2.24.
(2) Remove F04, then disassemble F05 (Control Motor Ass'y).
(3) Remove F06, then disassemble F07 (Reel Motor Ass'y).

2.26. Cam Control Volume

Refer to Fig. 2.8.

(1) Remove Sub Mechanism Chassis Ass'y referring to item 2.24.
(2) Remove F08, then disassemble F09 (Volume Coupler).
(3) Remove F10, then disassemble F11 (Cam Control Volume).

2.27. Azimuth Motor Ass'y

Refer to Fig. 2.8.

(1) Remove Sub Mechanism Chassis Ass'y referring to item 2.24.
(2) Remove F12, then disassemble F13 (Azimuth Alignment Motor Ass'y).
(3) Remove F14, then disassemble F15 (Azimuth Motor Ass'y) and F16 (Drive Pulley Ass'y).

2.28. Reel Hub Ass'y and Idler Ass'y

Refer to Fig. 2.8.

(1) Remove Sub Mechanism Chassis Ass'y referring to item 2.24.
(2) Remove F17 (Reel Hub Head), then disassemble F18 (Reel Hub B Ass'y), F19 (Reel Hub Take-up Ass'y), F20 (Reel Hub Supply Ass'y), F21 (Back Tension Ass'y) and F22 (Back Tension Spring).
(3) Remove F23, then disassemble F24 (Idler Ass'y).

2.29. Cam Drive Gear and Control Cam

Refer to Fig. 2.8.

(1) Remove Sub Mechanism Chassis Ass'y referring to item 2.24.
(2) Remove F25, then disassemble F26 (Cam Drive Gear).
(3) Remove F27, then disassemble F28 (Counter-Load Arm Ass'y).
(4) Remove F29, then disassemble F30 (Control Cam).

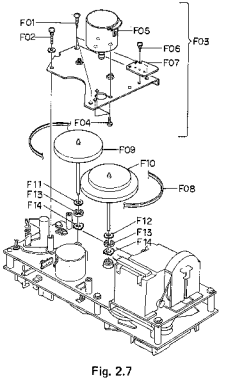

Fig. 2.7

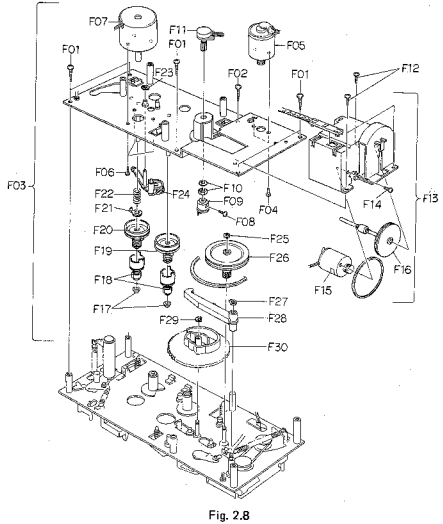

Fig. 2.8

2.30. Head Mount Base Ass'y

Refer to Fig. 2.9. .

(1) Refer to Fig. 2.6. Remove Cassette Case Ass'y referring to item 2.21.

(2) Remove F01, then disassemble F02 (Head Mount Base Ass'y).

2.31. Pressure Roller Ass'y and Erase Head

Refer to Fig. 2.9.

(1) Remove Head Mount Base Ass'y referring to item 2.30.

(2) Remove F03, then disassemble F04 (Supply Pressure Roller Ass'y).

(3) Remove F05, then disassemble F06 (Erase Head).

(4) Remove F07, then disassemble F08 (Take-up Pressure Roller Ass'y).

2.32. Playback Head Ass'y and Record Head Ass'y

Refer to Fig. 2.9.

(1) Remove Head Mount Base Ass'y referring to item 2.30.

(2) Turn F09 by 90° by pushing it, then disassemble F10 (Playback Head Ass'y).

(3) Turn F10 by 90° by pushing it, then disassemble F12 (Record Head Ass'y) and F13 (RH Azimuth Alignment Plate).

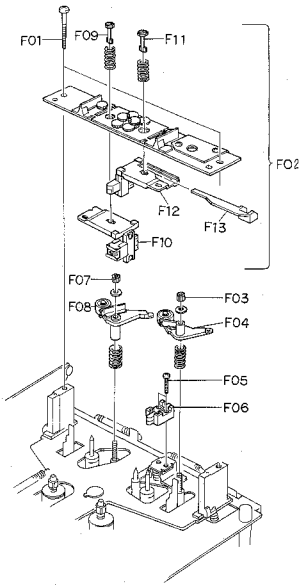

Fig. 2.9

3. MEASUREMENT INSTRUMENTS

(1) Audio Generator (20 Hz – 200 kHz)
(2) AC Millivolt Meter (with dB measures)
(3) Oscilloscope (DC – 5 MHz)
(4) Distortion Meter
(5) Speed & Wow/Flutter Meter
(6) Frequency Counter (DC – 1 MHz)
(7) Ohm Meter
(8) DC Volt Meter
(9) AC Volt Meter
(10) Torque Gauge (DA09013A)
(11) 15 kHz Azimuth Tape (DA09004A)
(12) 3 kHz Speed & Wow/Flutter Tape (DA09006A)
(13) 1 kHz Track Alignment Tape (DA09007A)
(14) 400 Hz Level Tape (DA09005A)
(15) 20 kHz PB Frequency Response Tape (DA09001A)
(16) 15 kHz PB Frequency Response Tape (DA09002A)
(17) 10 kHz PB Frequency Response Tape (DA09003A)
(18) Reference EXII Tape (DA09021A)
(19) Reference SX Tape (DA09025A)
(20) Reference ZX Tape (DA09037A)
(21) Tilt Check Gauge M-9039 (DA09039A)
(22) EH Tilt Check Gauge M-9040 (DA09040A)
(23) EH Stroke Check Gauge M-9042 (DA09042A)
(24) EH Stroke Check Gauge M-9051 (DA09051A)
(25) Stroke Check Gauge M-9047 (DA09047A)
(26) Record Head Mounting Gauge M-9048 (DA09048A)
(27) Back Tension Gauge (DA09055A)
(28) Tension Arm Adjustment Cassette (DA09056A)
(29) Audio Analyzer T-100
(including Distortion, Wow/Flutter, Speed, Osciillator and dB meter)

Notes: 1. (10) – (29) are the products of Nakamichi Corporation.
2. EH Stroke Check Gauge M-9042 (DA09042A) should be used for the Models serial Nos. from A11501001 to A11503890, and EH Stroke Check Gauge M-9051 (DA09051A) is for the Models bearing serial Nos. A11503891 and greater.
3. Back Tension Gauge (DA09055A) and Tension Arm Adjustment Cassette (DA09056A) are used for the Models bearing serial Nos. A11505640 and greater.

4. MECHANICAL ADJUSTMENTS

4.1. Mechanism Control Cam Adjustment

Before adjustment, disassemble the Front Panel Ass'y, then remove the Cover Plate referring to items 2.5 and 2.21.

(1) Offset Adjustment of Control Motor Driver

(a) Refer to Figs. 4.1 and 4.2.
Adjust VR402 and VR403 on the Logic P.C.B. to locate approximately at the middle of the variable range. Then turn ON the Power Switch.
VR402 (for Cam position stop)
VR403 (for Cam position play)

(b) Press the Stop Switch to set the N-670ZX in stop mode.
Adjust VR402 (for stop) so that the "S" mark on the Cam corresponds to the pointer on the mechanism chassis.

(c) Press the Play Switch to set the N-670ZX in playback mode.
(Cam will rotate, and the position marked with "PY" comes to the pointer.) Adjust VR403 (for play) so that the "PY" mark on the Cam corresponds to the pointer.

(d) Repeat above (b) and (c) 2 – 3 times so that the "S" and "PY" marks on the Cam correspond to the pointer accurately in stop and playback modes respectively.
(This adjustment is required because the position adjusted by one volume will be slightly changed when the other volume is adjusted.)

(e) Set the N-670ZX in FF, pause, or cue mode by pressing each switch (press FF and Pause Switches to set the N-670ZX in cue mode) and check to insure that the pointer is in a range of "F", "PS", or "CU" mark respectively.

(f) If out of the range, precise adjustment for each position according to "(2) Offset Fine Adjustment of Control Motor Driver" will be required.

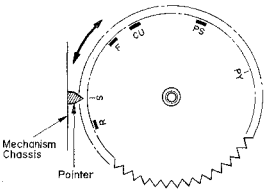

Fig. 4.1

(2) Offset Fine Adjustment of Control Motor Driver

Adjust only if a satisfactory result is not obtained in "(1) Offset Adjustment of Control Motor Driver". This adjustment is made by changing the value of the fixed resistors on the Logic P.C.B.

Note: The value of voltage is typical value.

(a) Observation Point of Reference Voltage

Observe the each voltage at the sliding contact of the Cam Control Volume VR405 (10 kΩ) in stop, fast (FF or REW), pause, record and playback modes.

(b) Reference Voltage

Reference voltage at the sliding contact of VR405 (Cam Control Volume) in each mode is as follows:

Mode	Reference Voltage (Typical Value)
Stop	3.0 V
Fast (FF/REW)	1.3 V — 1.7 V ±0.25 V
Pause	-2.8 V
Play	-5.4 V — 2.6 V ±0.4 V

(c) Resistors for Adjustment

Mode	Ref. No.	Typical Value
Stop	R461	9.1 kΩ (F)
Fast (FF/REW)	R462	4.32 kΩ (F)
Pause	R445	287 kΩ (F)
Play	R443	174 kΩ (F)

(d) Adjustment Procedures

1) Press the Stop Switch to set the N-670ZX in stop mode.
Adjust the value of R461 to obtain 3.0 V (±0.6 V) at the sliding contact of VR405.
Note: When R461 is adjusted, the reference voltage in fast (FF or REW) mode is changed. Therefore, re-check of the reference voltage in fast (FF or REW) mode is required. If the reference voltage is out of the range, re-adjustment of R462 according to next step 2) is necessary.

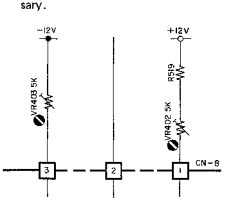

Fig. 4.2

2) Set the N-670ZX in FF mode, then adjust the value of R462 so that the voltage of VR405 will become lower by 1.7 V (±0.25 V) than in stop mode.
3) Press the Pause Switch to set the N-670ZX in pause mode.
Adjust the value of R445 to obtain −2.8 V (+0.4, -0.15 V) at the sliding contact of VR405.
4) Set the N-670ZX in playback mode, then adjust the value of R443 so that the voltage of VR405 will become lower by 2.6 V (±0.4 V) than in pause mode.

(3) Cam Timing Adjustment

(a) Remove the wires from the Control Motor Terminals to set the motor open.
(b) Without loading a cassette tape and with pressing the Record Protecting Switch with your finger tip, press the Record and Play Switches to set the N-670ZX in record mode.
(c) Turn the Cam and bring the "PY" mark toward the pointer by hand. Reel Motor will rotate before the "PY" mark reaches the pointer. Adjust the value of R483 and R484 so that the voltage at sliding contact of VR405 becomes -3.6 V (±0.3 V) when Reel Motor starts rotation.
(d) Observe the mute signal at the Q418 collector.
Turn the Cam referring to above step (c) and check to insure that the voltage at the sliding contact of VR405 is -3.8 V (±0.3 V) when mute is released (mute signal changes from H to L).
(This voltage is determined by the adjustment of R483 and R484 in above step (c).)
(e) Observe the $\overline{\text{Rec.}}$ signal at the Q417 collector. Turn the Cam referring to above step (c) and adjust the value of R488 to obtain -2.1 V (±0.4 V) at the sliding contact of VR405 when $\overline{\text{Rec.}}$ signal changes from H to L (bias oscillation will begin).
(f) Upon completion of the above adjustment, re-connect wires to the motor terminals.

4.2. Tape Speed Adjustment

(1) Remove the Top Cover.
(2) Connect a Frequency Counter to the Output Jack.
(3) Load a 3 kHz Wow/Flutter Tape (DA09006A) and play it back.
(4) Referring to Fig. 4.3, adjust the Tape Speed Adjustment Volume VR407 on the Speed Cal. P.C.B. to obtain 3,000 Hz on the Frequency Counter.
CCW: Motor drives slowly.
CW: Motor drives fast.

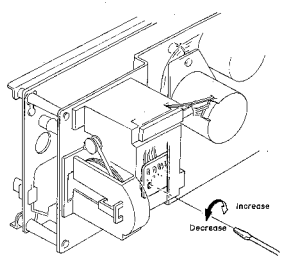

Fig. 4.3

4.3. Record Head and Playback Head Tilt Adjustment

Note: On items 4.3 – 4.9, please refer to Fig. 4.4 flow chart.

Refer to Figs. 4.5 and 4.6.

(1) Load a Tilt Check Gauge M-9039 (DA09039A) in the N-670ZX.

(2) Clip the grounding terminal of the Tilt Check Gauge with one end of the cord with clip, and the other end to the chassis of the N-670ZX.

(3) Remove both of the Height Gears.

(4) Set the N-670ZX in play mode. Check to insure whether the Beacons Playback Head "Upper" or "Lower" and Record Head "Upper" or "Lower" are illuminating. In order not to give damages onto the head surfaces, push both of slide knobs of the Gauge to the direction of arrow marks, then return it to the original place to be in contact with record head and playback head surfaces after play mode is securely locked.

(5) Check to insure freedom from contact between the Gauge and pad lifter.

(6) Beacon Playback Head "Lower" will light on when height adjustment screw (P) turned clockwise but Playback Head "Upper" when counterclockwise. Adjust so that both "Upper" and "Lower" will light on even when you move the slide knob to the direction of an arrow mark and then return it to the original place.

(7) Same procedures will apply to the Beacons Record Head "Upper" and "Lower", except for the height adjustment screw (R).

(8) Set the N-670ZX in stop mode and fit both of the serrated height gears. Then set the N-670ZX again in play mode and insure all of the 4 Beacons are illuminating. If not, (3) through (7) will have to be repeated till satisfactory results are obtained.

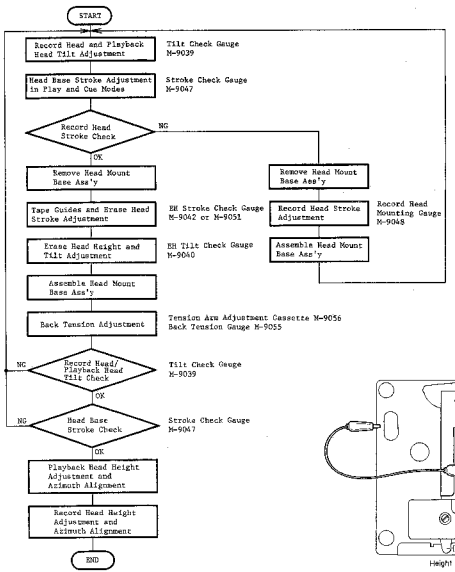

Fig. 4.4

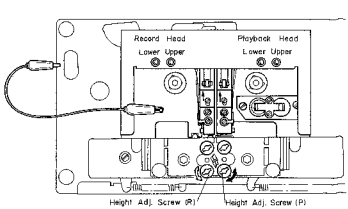

Fig. 4.5

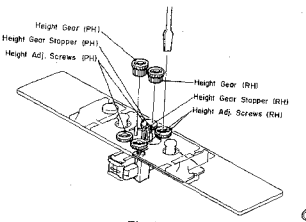

Fig. 4.6

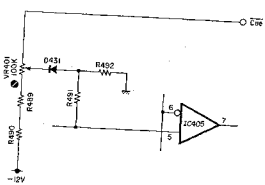

Fig. 4.8

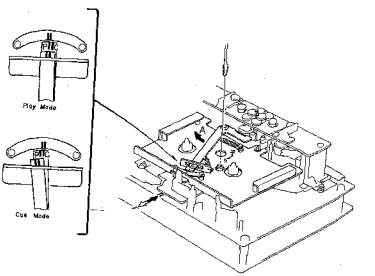

Fig. 4.7

4.4. Head Base Stroke Adjustment in Play and Cue Modes

Note: Before you conduct this adjustment, adjust with a "Tilt Check Gauge" to insure freedom from tilt on the playback head and record head.

(1) Head Base Stroke Adjustment in Play Mode

Refer to Fig. 4.7.

(a) Load a Stroke Check Gauge M-9047 (DA09047A) in the N-670ZX.

(b) Move Record Head Indicator and Playback Head Indicator to the direction of arrow mark "A" with your finger tip and then set the N-670ZX in play mode. Then slowly release the Indicators and insure whether each of the Indicators is in contact with record and playback heads.

(c) Check to insure whether the "P" pointer on the Playback Head Indicator locates between the 2 lines on the Indicator Plate.

(d) If the playback head stroke is noted to be misaligned, adjustment can be made by moving the stroke adjuster assembled in the head base assembly (either forwardly or backwardly).

(e) Check to insure whether the "P" pointer on the Playback Head Indicator locates between the 2 lines on the Record Head Indicator, thus check can be made on record head stroke.

(f) If the record head stroke is noted to be misaligned, adjustment can be made with a Record Head Mounting Gauge M-9048 (DA09048A).

(2) Head Base Stroke Adjustment in Cue Mode

Refer to Fig. 4.8.

(a) Load a Stroke Check Gauge M-9047 (DA09047A) in the N-670ZX.

(b) Move Record Head Indicator and Playback Head Indicator to the direction of arrow mark "A" with your finger tip and then set the N-670ZX in cue mode (F.F. and Pause). Then slowly release the Indicators and insure whether each of the Indicators is in contact with record and playback heads.

(c) Check to insure whether the "C" pointer on the Playback Head Indicator locates between the 2 lines on the Indicator Plate.

(d) If the playback head stroke is noted to be misaligned, adjust VR401 on the Logic P.C.B. Ass'y till satisfactory results are obtained.

(e) After completion of the Head Base Stroke Adjustment, check to insure accuracy of the Head Base Stroke Adjustment in play mode. If the above are inaccurate, items (1) and (2) will have to be repeated till satisfactory results are obtained.

4.5. Tape Guides Adjustment and Erase Head Stroke Adjustment

Remove Head Mount Base Ass'y referring to item 2.30. Refer to Figs. 4.9 and 4.10.

(1) Supply Tape Guide Height Adjustment

(a) Load an EH Stroke Check Gauge M-9042/M-9051 in the N-670ZX.
(b) Set the N-670ZX in play mode.
(c) Slide the Supply Tape Guide Check Bar down against the supply tape guide, thus check can be made on supply tape guide height.
(d) If the supply tape guide is misaligned, the Supply Tape Guide Check Bar will not come into the supply tape guide. If such is noted, turn to adjust the height adjustment nut A till the Supply Tape Guide Check Bar is accepted by the supply tape guide.
(e) If the above are insured, set the N-670ZX in pause mode, then in play mode to see whether adjustments are appropriately made. If not, (b) through (e) will have to be repeated till satisfactory results are obtained.

(2) Take-up Tape Guide Height Adjustment

(a) Load an EH Stroke Check Gauge M-9042/M-9051 in the N-670ZX.
(b) Set the N-670ZX in play mode.
(c) Slide the Take-up Tape Guide Check Bar down against the take-up tape guide, thus check can be made on take-up tape guide height.
(d) If the take-up tape guide is misaligned, the Take-up Tape Guide Check Bar will not come into the take-up tape guide. If such is noted, turn to adjust the height adjustment nut B till the Take-up Tape Guide Check Bar is accepted by the take-up tape guide.
(e) If the above are insured, set the N-670ZX in pause mode, then in play mode to see whether adjustments are appropriately made. If not, (b) through (e) will have to be repeated till satisfactory results are obtained.

(3) Erase Head Stroke Adjustment

(a) Load an EH Stroke Check Gauge M-9042/M-9051 in the N-670ZX.
(b) Set the N-670ZX in play mode, thus check can be made on erase head stroke through the EH Stroke Indicator.
(c) Check to insure whether the erase head surface is aligned with red line on the EH Stroke Indicator. If not, adjust the erase head stroke by loosening 2 screws that assembled erase head and erase head plate.
(d) After completion of adjustment, 2 pcs. of screws shall be locked with lock tight paint.

Note:
EH Stroke Check Gauge M-9042 (DA09042A) should be used for the Models serial Nos. from A11501001 to A11503890, and EH Stroke Check Gauge M-9051 (DA-09051A) is for the Models bearing serial No. A11503891 and greater.

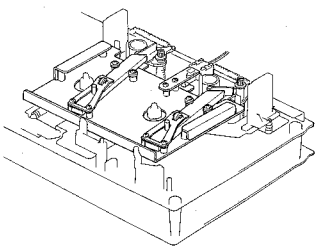

Fig. 4.9

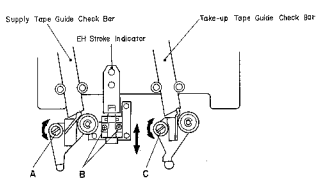

Fig. 4.10

4.6. Erase Head Height and Tilt Adjustment

Refer to Figs. 4.11 and 4.12.

(1) Remove Head Mount Base Ass'y referring to item 2.30.
(2) Load an EH Tilt Check Gauge M-9040 (DA09040A) in the N-670ZX.
(3) Set the N-670ZX in stop mode.
(4) Check to insure whether one of the 3 Beacons is illuminating. Look down the mirror as shown by an arrow mark and slowly turn the Screw "Height" counterclockwise (or clockwise) so that the two horizontal lines on the mirror will become superposed on the line (in different color) of the erase head, and check to insure whether Beacon "1" is illuminating.

(5) Turn Screw "Tilt" counterclockwise (or clockwise) to light on Beacon "2". Excessive turning will cause the Beacon "1" to light off. Adjustments of Screw "Tilt" will therefore be conducted till both of the Beacons "1" and "2" illuminate.

(6) Turn Screw "Azimuth" counterclockwise (or clockwise) to light on Beacon "3". Excessive turning will cause either Beacon "1" or "2" to light off, and therefore adjust with Screw "Azimuth" until all of the 3 Beacons "1", "2" and "3" illuminate.

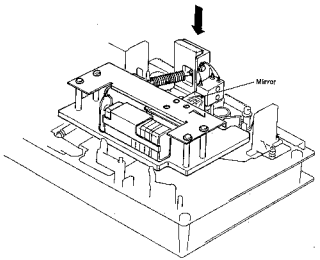

Fig. 4.11

(7) Check to insure whether the horizontal line on the mirror corresponds to that on the erase head. If not, (4) through (7) will have to be repeated till satisfactory results are obtained.

(8) After completion of adjustment, 3 pcs. of screws shall be locked with lock tight paint.

Note: Before use of this gauge, check to insure freedom from dust or dirts, or overflow in the groove of the erase head surface.

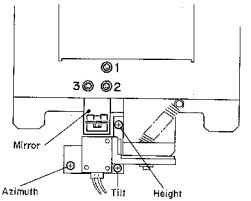

Fig. 4.12

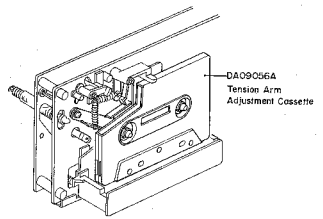

Fig. 4.13

4.7. Back Tension Adjustment

Note: This adjustment is required for the Models bearing serial Nos. A11505640 and greater.

Refer to Figs. 4.13 – 4.16.

(1) Load the Tension Arm Adjustment Cassette (DA 09056A) referring to Fig. 4.13.

(2) Set the Cassette Deck in play mode.

(3) Bend the Back Tension Arm with pliers so that the gap between the Cassette Holding Spring assembled with the Head Base Ass'y and the Back Tension Arm becomes 0.5 mm as shown in Fig. 4.14. Do not bend the pointed end of the Back Tension Arm.

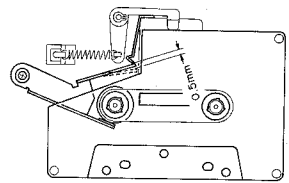

Fig. 4.14

(4) Set the Cassette Deck in stop mode, and remove the Tension Arm Adjustment Cassette (DA09056A), then set the Cassette Deck in cue mode.
In cue mode, check to insure that the gap is found between the Supply Reel Hub B Ass'y and the Felt of Back Tension Ass'y as shown in Fig. 4.15.
(5) Load the Back Tension Gauge (DA09055A).
(6) Set the Cassette Deck in play mode and read the torque value of Back Tension Gauge.
If the value is in a range of 6 g-cm to 10 g-cm, adjustment is not necessary. If not, change the installation point of the Back Tension Spring as shown in Fig. 4. 16, and obtain the torque of 7 g-cm to 9 g-cm range.

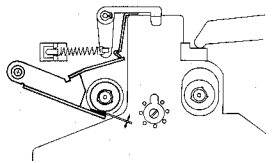

Fig. 4.15

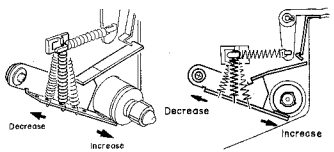

Fig. 4.16

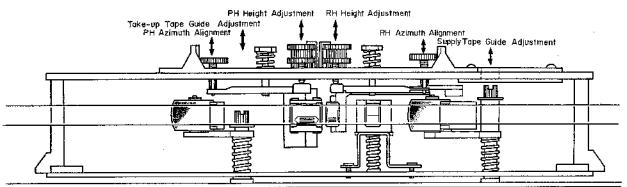

Fig. 4.17

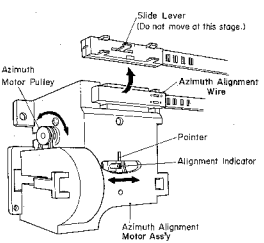

Fig. 4.18

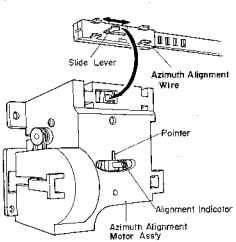

Fig. 4.19

4.8. Playback Head and Record Head Height Adjustment and Azimuth Alignment

(1) Playback Head Height Adjustment and Azimuth Alignment

Refer to Fig. 4.17.

(a) Set the Monitor Switch to the Tape position, then connect a VTVM to the Output Jacks.

(b) Load a 1 kHz Track Alignment Tape (DA09007A), then set the N-670ZX in play mode.

(c) Turn the PH Height Gear until the outputs of both channels become minimum.

(d) Load a 15 kHz Azimuth Tape (DA09004A), then set the N-670ZX in play mode.

(e) Turn the PH Azimuth Alignment Screw until the outputs of both channels become maximum.

(f) Repeat above steps (b) through (e) one or two times to obtain optimum performance.

(2) Record Head Height Adjustment and Azimuth Alignment

Refer to Figs. 4.17 - 4.20.

(a) Set the N-670ZX in stop mode.
Turn the Azimuth Motor in the Azimuth Alignment Motor Ass'y by hand so that the Alignment Indicator corresponds to the pointer of the Azimuth Alignment Motor Ass'y as shown in Fig. 4.18.
Remove the Azimuth Alignment Wire by pulling out from the Azimuth Alignment Motor Ass'y. In this case, do not move the Slide Lever of the Azimuth Alignment Wire. Short both leads of capacitor C903 on the Auto Azimuth P.C.B. Ass'y with a jumper wire.

(b) Set the Monitor Switch to the Tape position, then connect a VTVM to the Output Jacks.

(c) Load a Reference SX Tape (DA09025A). Set the Eq. Switch to the 70 μs position and Tape Switch to the SX position. Then set the N-670ZX in record and play mode.

(d) Set the Auto. A/Tone Switch to the Cal. position, then turn the RH Height Gear until the outputs of both channels become maximum.

(e) Feed in 15 kHz (–20 dB), then set the N-670ZX in record and play mode. Turn the RH Azimuth Alignment Screw until the outputs of both channels become maximum.

(f) Repeat above steps (d) and (e) one or two times to obtain optimum performance.

(g) After completion of the above adjustments, perform the following electrical adjustment by using the same side of the same tape as used in the above steps.
1) Set the Monitor Switch to the Tape position and the Auto. A/Tone Switch to the Cal. position, then set the N-670ZX in record and play mode.
2) Adjust VR901 on the Auto Azimuth P.C.B. Ass'y so that the Azimuth Motor stops its rotation.

(h) Set the N-670ZX in stop mode.
Mount the Azimuth Alignment Wire on the Azimuth Alignment Motor Ass'y referring to Fig. 4.19. (Correct the position of the Slide Lever of the Azimuth Alignment Wire by sliding by hand, then insert the Slide Lever into the receptacle of the Azimuth Alignment Motor Ass'y.)
Remove the shorting jumper wire from C903 on the Auto Azimuth P.C.B. Ass'y.

(i) After completion of the above adjustments, record 400 Hz tone to the same portion of both sides A and B of the tape.

(j) Immerse the recorded tape in a magnetized developing solution. In turn, check to insure that the recording head tracks across the center are separated with a distance of 0.55 to 0.75 mm (typically 0.65 mm) as illustrated in Fig. 4.20.
Note: Liquid for tape magnetized development solution; "MAGNA-SEE, SOUND CRAFT a product of CBS RECORDS a division of Columbia Broadcasting System, Inc., Danbury, Conn. 06810 U.S.A., or equivalent".
After development, clean the tape otherwise pressure rollers and heads will become dirty.

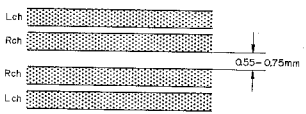

Fig. 4.20

4.9. Record Head Stroke Adjustment

Refer to Figs. 4.21 and 4.22.

Note: This adjustment will be required only to insure freedom from misalignment of the record head stroke in the record head stroke check mode.

(1) Check the accuracy of the record head stroke.
(2) Remove Head Mount Base Ass'y referring to item 2.30.
(3) Remove the record head assembly.
(4) Adjustment of Record Head Mounting Gauge M-9048 (DA09048A)
  (a) Mount the Block B onto the Mounting Gauge Plate.
  (b) Loosen the 2 screws fixing the Block A.
  (c) As shown in Fig. 4.21 hold the Gauges (3.05 mm and 0.1 mm thickness) between the Block A and Block B, fix the Block A with screws, pushing the Block A to the 2 guide pins.
(5) Remove the Block B from the Mounting Gauge Plate.
(6) As shown in Fig. 4.22, mount the R-8L record head assembly onto the Mounting Gauge Plate, then check the location of the R-8L record head surface. (If record head contacts to the Block C, loosen 2 pcs. of screws that assembled record head and R-8L record head assembly, then place the R-8L record head assembly onto the Plate.)
(7) Remove the R-8L record head assembly from the Mounting Gauge Plate.
(8) Readjustment of Record Head Mounting Gauge M-9048 (DA09048A)
  (a) Mount the Block B onto the Mounting Gauge Plate.
  (b) Loosen the 2 screws fixing the Block A.
  (c) As shown in Fig. 4.21 hold the Gauges (3.05 mm and either one of 0.05, 0.15, 0.2, 0.25, 0.3 or 0.35 mm thickness) between the Block A and Block B, fix the Block A with screw, pushing the Block A to the 2 guide pins.
(9) Remove the Block B from the Mounting Gauge Plate.
(10) Mount the R-8L record head assembly onto the Mounting Gauge Plate.
(11) As shown in the Fig. 4.22, loosen the R-8L record head with 2 pcs. of screws onto the record head plate. As the location of the Block A is secured by the item (8)-(c), push the record head to the directions A and B, then tighten 2 pcs. of screws.
(12) Check to insure freedom from gap between the Block C and record head surface, then tighten the 2 pcs. of screws on the record head plate with lock tight paint.
(13) Assemble the record head assembly to the head mount base assembly.
(14) Assemble the head mount base assembly to the mechanism assembly.
(15) Check the record head stroke.
  If the above are inaccurate, items (1) through (15) will have to be repeated till satisfactory results are obtained.



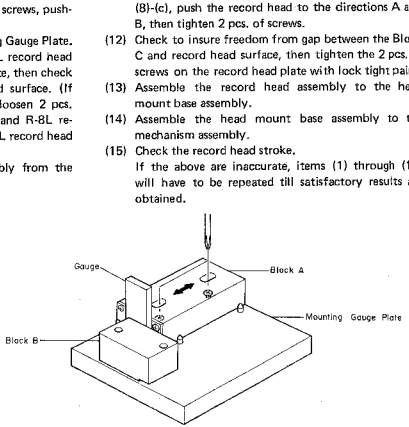

Fig. 4.21

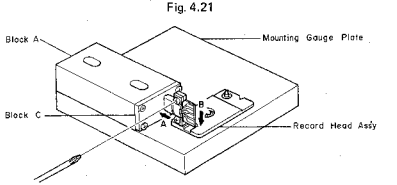

Fig. 4.22

4.10. Tape Travelling Adjustment

The adjustment shall be made with a modified version of the current type EXII C-90 as shown in Fig. 4.23 (error will be made if a current type Tape Travelling Cassette (DAD9011A) should be used for this purpose).

While modifying an EXII C-90, the tape guides in the cassette housing shall be kept protected to avoid tilt.

Check shall be made in the following procedures:

(1) An EXII C-90 Tape thus modified shall be loaded onto the N-670ZX.

(2) Release the back-tension (rotate the Supply Reel and feed out some length of tape) and set the N-670ZX in play mode.

(3) In this juncture, check to insure whether the tape is free from waving or slippage from the tape guide.

(4) When the modified EXII C-90 is played back, check to insure whether the tape is freedom from waving from head surface or at pressure rollers.

(5) If either of waving or slippage from the tape guide should be noted, adjustments of "4.3. Record Head and Playback Head Tilt Adjustment", "4.4. Head Base Stroke Adjustment", "4.5. Tape Guides Adjustment and Erase Head Stroke Adjustment", "4.6. Erase Head Height and Tilt Adjustment", "4.7. Back Tension Adjustment", "4.8. Playback Head and Record Head Height Adjustment and Azimuth Alignment", "4.9. Record Head Stroke Adjustment", etc. will be required.

As a case may be, the said waving or slippage may have been caused from defective Supply Pressure Roller Ass'y or Take-up Pressure Roller Ass'y without parallel contact with capstans. If such are noted, the Pressure Roller Assemblies will have to be replaced.

Further, excessively weak take-up torque or strong take-up torque may cause defective tape travelling.

The N-670ZX is intended to be an adjustment-free Model, however if the similar matters as above should be noted, please replace the Reel Hub Ass'y to obtain appropriate take-up torque.

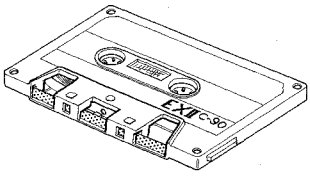

Fig. 4.23

4.11. Flywheel Holder Adjustment

(1) Refer to Fig. 4.24.
Tighten the Thrust Screws until the gap between the Flywheel Assemblies and Thrust Screws becomes minimized when both of the Capstan Shafts are moved backwardly and forwardly (the Thrust Springs between the Capstan Flanges and Flywheel Thrust Caps are in a flat state).
Excessive tightening of the Thrust Screws however will give damages on the Flywheel Assemblies, to which careful attention is invited.

(2) Return the Thrust Screws by 1/2 turn.

(3) Fixing the Thrust Screw with a screwdriver, lock the Lock Nut.

(4) Apply a quantity of lock tight paint to the Thrust Screws.

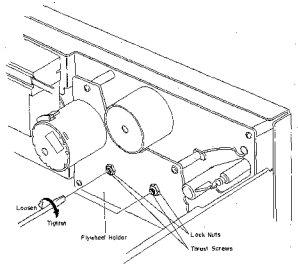

Fig. 4.24

4.12. Lubrication

N-670ZX is a lubrication-free cassette deck except when parts are replaced. Apply the following lubricant for each replaced part:

(1) LAUNA #100
Capstan Shaft
Pressure Roller Shaft
Thrust Cap

(2) FLOIL GB-TS-1
Reel Hub Shaft
Thrust portion on the Capstan Shaft
FLOIL GB-TS-1, made by Kanto Chemicals Co., Ltd., in Japan.
We suggest you use the above or equivalent type. If unavailable please contact Kanto Chemicals Co., Ltd., 2-7 Kanda Suda-cho Chiyoda-ku, Tokyo 101 Japan.

(3) Silicon Oil #3000CST
Air Damper Piston
Note: Excessive lubrication may cause defective damper action as the 0.2ϕ hole at the end of the cylinder may be filled with oil.

5. PARTS LOCATION FOR ELECTRICAL ADJUSTMENT

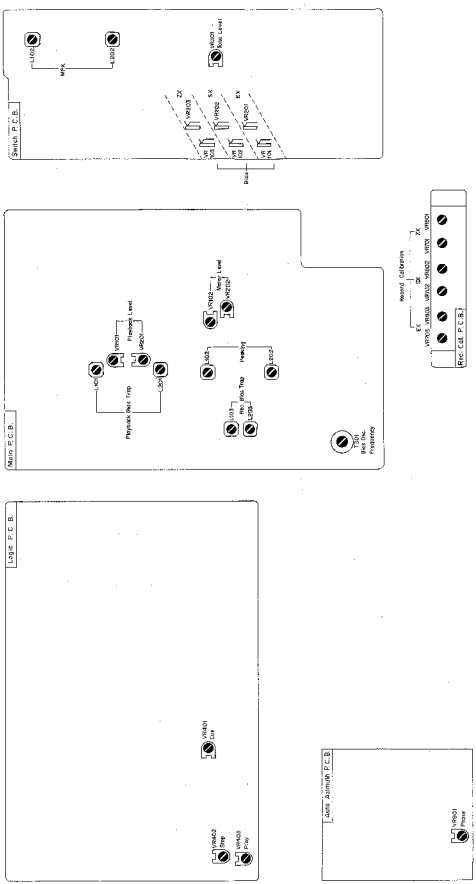

6. ELECTRICAL ADJUSTMENTS AND MEASUREMENTS

6.1. Adjustment and Measurement Instructions

Note: Electrical adjustment should be performed after mechanical adjustment is completed.

STEP	ITEM	SIGNAL SOURCE	OUTPUT CONNECTION	MODE	ADJUSTMENT	REMARKS
1	Tape Speed	3 kHz Speed and Wow/Flutter Tape (DA09006A)	Frequency Counter to OUTPUT Jacks	Playback	Speed Cal. P.C.B. VR407	Adjust VR407 to obtain 3 kHz ± 0.5%.
2	Tone Calibration	Test Tone 400 Hz	VTVM to TP101, TP201 on the Main P.C.B.	Monitor SW — Source Auto. A/Tone SW — CAL	Switch P.C.B. VR301	1. Set the Auto. A/Tone Switch to CAL. Turn output level control fully clockwise (maximum position). 2. Adjust VR301 to obtain 100 mV ± 0.2 dB at TP101 and TP201 on the VTVM (Output level will be 1V (0 dB)).
3	Meter Level	400 Hz (0 dB/—10 dB/—20 dB) to INPUT Jacks	VTVM to TP101, TP201 on the Main P.C.B.	Monitor SW — Source Auto. A/Tone SW — CAL/OFF	Main P.C.B. VR102, VR202	1. Adjust VR102 (VR202) to obtain 0 dB on the level meters at 100 mV level on the VTVM. 2. Decrease input level by 10 dB/20 dB then short or open R145 (R245) to obtain minimum deviation for —10 dB/—20 dB on the level meters. (Perform at —10 dB and —20 dB.) 3. Again increase input level so that output will become 100 mV, then re-adjust VR102 (VR202) to obtain 0 dB on the level meters.
4	MPX Filter	19 kHz ± 100 Hz to INPUT Jacks	VTVM to OUTPUT Jacks	Monitor SW — Source Auto. A/Tone SW — OFF Dolby NR SW — OUT/MPX	Switch P.C.B. L102, L202	1. Turn output level control fully clockwise (maximum position). 2. Adjust input level control to obtain 1 V on the VTVM. 3. Set the Dolby NR Switch to MPX position, then adjust L102 (L202) to obtain minimum reading on the VTVM (minimum reading will be less than —30 dB).
5	Playback Head Track Alignment	1 kHz Track Alignment Tape (DA09007A)	VTVM to OUTPUT Jacks	Playback Monitor SW — Tape Auto. A/Tone SW — OFF Eq. SW — 70 μs Dolby NR SW — OUT	Playback Head Height Adj. Screw	Adjust the Playback Head Height Adj. Screw to obtain minimum reading of both L and R channels on the VTVM. See "Playback Head Height Adjustment and Azimuth Alignment" in item 4.8.
6	Playback Head Azimuth Alignment	15 kHz Azimuth Tape (DA09004A)	VTVM to OUTPUT Jacks	Same as above	Playback Head Azimuth Alignment Screw	Adjust the Playback Head Azimuth Alignment Screw to obtain maximum reading of both L and R channels on the VTVM. See "Playback Head Height Adjustment and Azimuth Alignment" in item 4.8. Note: Repeat steps 5 and 6 one or two times to obtain optimum performance.
7	Playback level	400 Hz Level Tape (DA09005A)	VTVM to TP101, TP201 on the Main P.C.B.	Same as above	Main P.C.B. VR101, VR201	Adjust VR101 (VR201) to obtain 100 mV on the VTVM or 0 dB on the level meters.

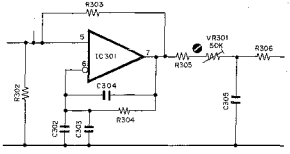

Fig. 6.1 2. Tone Calibration

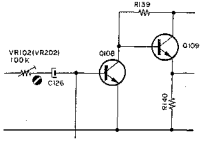

Fig. 6.2 3. Meter Level

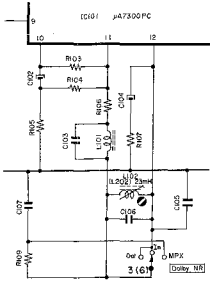

Fig. 6.3 4. MPX Filter

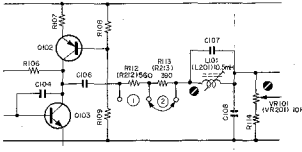

Fig. 6.4 7. Playback Level

STEP	ITEM	SIGNAL SOURCE	OUTPUT CONNECTION	MODE	ADJUSTMENT	REMARKS
8	Playback Frequency Response Adjustment	400 Hz Level Tape (DA09005A) 10 kHz PB Frequency Response Tape (DA09003A) 15 kHz PB Frequency Response Tape (DA09002A) 20 kHz PB Frequency Response Tape (DA09001A)	VTVM to OUTPUT Jacks	Playback Monitor SW — Tape Auto. A/Tone SW — OFF Eq. SW — 70 μs Dolby NR SW — OUT	Main P.C.B. R112, R212 R113, R213	1. Load the 400 Hz level tape and play it back. Adjust the output level control to a certain level (for example 0 dB). 2. Load the 10 kHz, 15 kHz and 20 kHz PB frequency response tapes and adjust the playback head azimuth to give maximum levels on the VTVM with each tape. Short R112 (R212) or R113 (R213) to obtain the following levels against 400 Hz level tape. Refer to Fig. 6.5. 10 kHz: −20 dB −1 dB to +2 dB 15 kHz: −20 dB −1 dB to +3 dB 20 kHz: −20 dB −1 dB to +4 dB 3. Conduct step 6 "Playback Head Azimuth Alignment". 4. If above is not sufficient, refer to "Playback Frequency Response Adjustment" in item 6.2.
9	Bias Oscillation Frequency and Erase Current	Connect an additional 0.1 Ω resistor in series to the Erase Head	VTVM and Frequency Counter across the additional 0.1 Ω resistor	Record, Pause Monitor SW — Source Tape SW — ZX Eq. SW — 70 μs Dolby NR SW — OUT	Main P.C.B. T301 R314, R315	1. Adjust T301 to obtain 105 kHz on the frequency counter. 2. Check the erase current by the VTVM. Erase current will be in a range of 310 mA to 400 mA (typically approx. 350 mA). If erase current is not sufficient, increase it by shorting R314 or R315. 3. After completion of the erase current adjustment, recheck the bias oscillation frequency.
10	Record Amplifier Equalizer	23 kHz (−20 dB) to INPUT Jacks	VTVM to CN2-1, CN2-3 on the Main P.C.B.	Record, Pause Monitor SW — Source Auto. A/Tone SW — OFF Tape SW — ZX Eq. SW — 70 μs Dolby NR SW — OUT	Main P.C.B. L102, L202	1. Remove the bias-cut-jumper from the dip side of the Main P.C.B. 2. Adjust L102 (L202) to obtain peak reading at 23 kHz on the VTVM. 3. Re-solder the bias-cut-jumper.
11	Bias Trap (Record Amp.)	Remove input signals	Same as above	Same as above	Main P.C.B. L103, L203	Adjust L103 (L203) to obtain maximum reading on the VTVM.

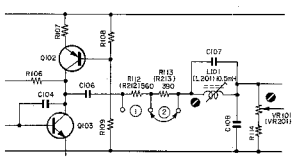

Fig. 6.5 8. Playback Frequency Response
12. Bias Trap (Playback Amp.)

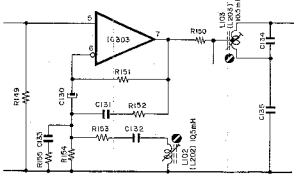

Fig. 6.7 10. Record Amp. Equalizer
11. Bias Trap (Record Amp.)

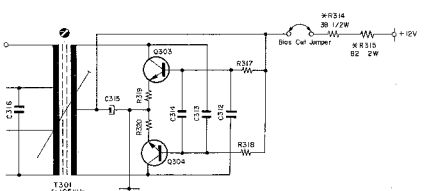

Fig. 6.6 9. Bias Oscillation Frequency and Erase Current

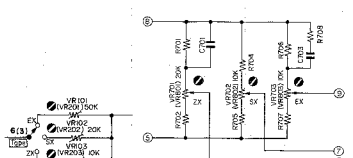

Fig. 6.8 13. Record Head Height and Azimuth

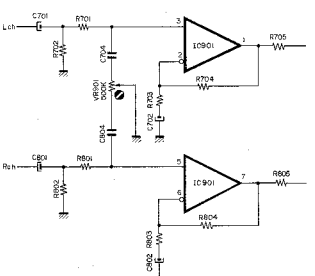

Fig. 6.9 13. Record Head Height and Azimuth

STEP	ITEM	SIGNAL SOURCE	OUTPUT CONNECTION	MODE	ADJUSTMENT	REMARKS
12	Bias Trap (Playback Amp.)	Remove input signals	VTVM to OUTPUT Jacks	Record, Playback Monitor SW — Tape Auto. A/Tone SW — OFF Tape SW — ZX Eq. SW — 70 μs Dolby NR SW — OUT	Main P.C.B. L101, L201	Adjust L101 (L201) to obtain minimum reading on the VTVM.
13	Record Head Height Adjustment and Azimuth Alignment	Test Tone 400 Hz and 15 kHz (—20 dB) to INPUT Jacks	VTVM to OUTPUT Jacks	Record, Playback Monitor SW — Tape Auto. A/Tone SW — CAL/OFF Tape SW — SX Eq. SW — 70 μs Dolby NR SW — OUT	Head Height: Record Head Height Adj. Screw Azimuth Alignment: Record Head Azimuth Alignment Screw Rec. Cal. P.C.B. (Level) VR702, VR802 Switch P.C.B. (Bias) VR102, VR202 Auto Azimuth P.C.B. VR901	1. In stop mode, turn the Azimuth Motor by hand so that the Alignment Indicator corresponds to the pointer of the Azimuth Alignment Motor Ass'y as shown in Fig. 4.18. Remove the Azimuth Alignment Wire by pulling out from the Azimuth Alignment Motor Ass'y. (In this case, do not move the Slide Lever of the Azimuth Alignment Wire.) Short both leads of capacitor C903 on the Auto Azimuth P.C.B. Ass'y with a jumper wire. 2. Record Head Height Adjustment: a. Set the Auto. A/Tone Switch to CAL. b. Record signals on the reference SX tape (DA09025A), then play it back. c. Adjust the Record Head Height Adj. Screw to obtain maximum readings of both channels on the VTVM. 3. Record Head Azimuth Alignment: a. Set the Auto. A/Tone Switch to CAL. b. Record signals on the reference SX tape (DA09025A), then play it back. c. Adjust Record Cal. VR702 (VR802) to the center position. d. Adjust Bias VR102 (VR202) to obtain maximum reading on the VTVM. e. Adjust Record Cal. VR702 (VR802) to obtain the same reading as the source monitor level on the level meter. f. Set the Auto. A/Tone Switch to OFF, then feed in 15 kHz (—20 dB). g. Record signals on the reference SX tape (DA09025A), then play it back. h. Adjust the Record Head Azimuth Alignment Screw to obtain maximum readings of both channels on the VTVM. i. Adjust finely VR102 (VR202) to obtain the same reading as the source monitor level on the VTVM. j. Repeat above substeps 2 and 3 one or two times to obtain optimum performance. k. Set the Auto. A/Tone Switch to CAL. l. Record signals on the reference SX tape (DA09025A), then play it back. m. Adjust VR901 so that the Azimuth Motor stops its rotation. 4. After completion of above steps, mount the Azimuth Alignment Wire on the Azimuth Alignment Motor Ass'y. Remove the shorting jumper wire from C903 on the Auto Azimuth P.C.B. Ass'y. 5. Check the Auto Azimuth Alignment function as follows: a. Set the Auto. A/Tone Switch to OFF. b. Load a reference tape, then depress the Record Button and Play Button simultaneously to start recording. c. Change the Auto. A/Tone Switch to the CAL position and check to insure that the play lamp will keep flashing. d. After the flashing is completed, check to insure that the playback level is indicated on the level meter for both channels. e. Set the Auto. A/Tone Switch to OFF, then feed in 15 kHz (—20 dB). f. Record signals on the reference SX tape (DA09025A), then play it back. g. Check to insure that the playback level is the same as the source monitor level for both channels. h. If above is insured, the Auto Azimuth Alignment function is accurate.

STEP	ITEM	SIGNAL SOURCE	OUTPUT CONNECTION	MODE	ADJUSTMENT	REMARKS
14	Record Level Calibration and Recording Bias Current Adjustment	Test Tone 400 Hz or 400 Hz and 15 kHz (–20 dB) to INPUT Jacks	VTVM and Distortion Meter to OUTPUT Jacks	Record, Playback Monitor SW – Tape Auto. A/Tone SW – CAL/OFF Tape SW – EX/SX/ZX Eq. SW – 120 μs (EX) 70 μs (SX/ZX) Dolby NR SW – OUT	Rec. Cal. P.C.B. (Level) ZX: VR701, VR801 SX: VR702, VR802 EX: VR703, VR803 Switch P.C.B. (Bias) ZX: VR103, VR203 SX: VR102, VR202 EX: VR101, VR201	For each tape to be used, perform the Auto Azimuth Alignment operation by depressing Record and Play Buttons simultaneously after setting the Auto. A/Tone Switch to CAL. To minimize the influence of interference between each volume, adjustment should be made in the order of ZX, SX and EX. 1. Set the Auto. A/Tone Switch to CAL. 2. Record signals on the reference ZX tape (DA09037A), SX tape (DA09025A), or EXII tape (DA09021A), then play it back. 3. Adjust Record Cal. VR701 (VR801) (for ZX), VR702 (VR802) (for SX), or VR703 (VR803) (for EXII) to the center position. 4. Adjust Bias VR103 (VR203) (for ZX), VR102 (VR202) (for SX), or VR101 (VR201) (for EXII) to obtain maximum reading on the VTVM. 5. Set the Auto. A/Tone Switch to OFF, then feed in 15 kHz (–20 dB). 6. Adjust finely VR103 (VR203) (for ZX), VR102 (VR202) (for SX), or VR101 (VR201) (for EXII) to obtain the same reading as the source monitor level on the VTVM. 7. Set the Auto. A/Tone Switch to CAL. 8. Adjust Record Cal. VR701 (VR801) (for ZX), VR702 (VR802) (for SX), or VR703 (VR803) (for EXII) to obtain 0 dB on the level meter. 9. Repeat 5 through 8 as above two or three times to obtain optimum performance. 10. Check whether the total harmonic distortion (T.H.D.) is less than 0.8% (for ZX), or 1.0% (for SX and EXII). Note: Typical bias current ZX: approx. 4.6 mA SX: approx. 2.5 mA EXII: approx. 1.6 mA
15	Overall Frequency Response	400 Hz (0 dB) and 10 Hz to 22 kHz/20 kHz (–20 dB) to INPUT Jacks	VTVM and Distortion Meter to OUTPUT Jacks	Record, Playback Monitor SW – Source/Tape Auto. A/Tone SW – OFF Tape SW – EX/SX/ZX Eq. SW – 120 μs (EX) 70 μs (SX/ZX) Dolby NR SW – OUT	Main P.C.B. L102, L202	For each tape to be used, perform the Auto Azimuth Alignment operation by depressing Record and Play Buttons simultaneously after setting the Auto. A/Tone Switch to CAL. 1. Set the Monitor Switch to Source. 2. Feed in 400 Hz (0 dB) and adjust input level controls to obtain 0 dB on the level meters. 3. Switch the Generator output level to –20 dB. 4. Set the Monitor Switch to Tape, then record and play it back. 5. Feed in 10 Hz to 22 kHz (–20 dB) (for ZX), or 10 Hz to 20 kHz (–20 dB) (for SX and EXII), and check to insure if the output levels are within –20 dB ± 3 dB. 6. If above is not sufficient, adjust L102 (L202) to obtain approx. –20 dB on the VTVM. 7. Conduct step 14 "Record Level Calibration and Recording Bias Current Adjustment". 8. If above is not sufficient, precise re-adjustment of step 8 "Playback Frequency Response", replacement of Playback Head or Record Head, or check on item 4.10 "Tape Travelling Adjustment" will be required.
16	Crosstalk	1 kHz to INPUT Jacks	1 kHz Band Pass Filter and VTVM to OUTPUT Jacks	Record and Playback Monitor SW – Tape Auto. A/Tone SW – OFF Tape SW – ZX Eq. SW – 70 μs Dolby NR SW – OUT		1. Erase the tape with bulk eraser. 2. Adjust input level controls to obtain 0 dB on the level meters, and record the signals on the reference tape. 3. Turn the cassette tape the other way round and play it back. 4. Measure the difference between 2 and 3.
17	Channel Separation	1 kHz to INPUT Jacks	Same as above	Same as above		1. Erase the tape with bulk eraser. 2. Adjust Lch (Rch) input level control to obtain 0 dB on the level meter, and close Rch (Lch) input level control. 3. Record and play it back, then measure the Rch (Lch) level.

STEP	ITEM	SIGNAL SOURCE	OUTPUT CONNECTION	MODE	ADJUSTMENT	REMARKS
18	Erasure	1 kHz to INPUT Jacks	1 kHz Band Pass Filter and VTVM to OUTPUT Jacks	Record and Playback Monitor SW — Tape Auto. A/Tone SW — OFF Tape SW —ZX Eq. SW — 70 μs Dolby NR SW — OUT		1. Erase the tape with bulk eraser. 2. Adjust input level controls to obtain 0 dB on the level meters, and record the signals on the reference tape. 3. Rewind the tape then close input level controls. 4. Record and play it back, then measure the difference between 2 and 3.
19	Signal to Noise Ratio	400 Hz to INPUT Jacks	VTVM and Distortion Meter to OUTPUT Jacks	Record and Playback Monitor SW — Tape Auto. A/Tone SW — OFF Tape SW — ZX Eq. SW — 70 μs Dolby NR SW — MPX		1. Feed in 400 Hz and record, and play it back. 2. Adjust the input level controls to obtain 3% total harmonic distortion in playback mode. 3. Close the input level controls then record. 4. After rewound, play back and check the output level difference between 2 and 3. Note: The filter of IHF-A curve shall be used in the measurements.
20	Total Harmonic Distortion	400 Hz to INPUT Jacks	Distortion Meter to OUTPUT Jacks	Record and Playback Monitor SW — Tape Auto. A/Tone SW — OFF Tape SW — EX/SX/ZX Eq. SW — 120 μs (EX) 70 μs (SX/ZX) Dolby NR SW — OUT		1. Adjust input level controls to obtain 0 dB on the level meters. 2. Record and play it back. 3. Read the distortion meter and check to insure that the distortion is less than 0.8% for ZX tape and 1.0% for SX and EXII tapes.
21	Wow/Flutter	3 kHz Speed and Wow/Flutter Tape (DA09006A)	Wow/Flutter Meter to OUTPUT Jacks	Playback Monitor SW — Tape Auto. A/Tone SW — OFF Eq. SW — 70 μs Dolby NR SW — OUT		Play back and read the wow/flutter meter.

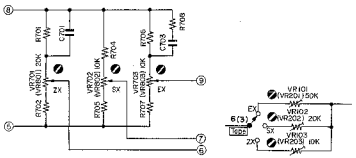

Fig. 6.10 14. Recording Level and Bias Current

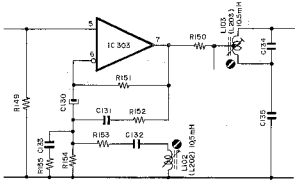

Fig. 6.11 15. Overall Frequency Response

6.2. Frequency Response Adjustment

(1) Playback Frequency Response Adjustment

Refer to Figs. 6.12 and 6.13.

(a) Level Adjustment (for middle frequency response)

This adjustment will be required when playback level is not sufficient at 10 kHz PB Frequency Response Tape (refer to step 8 in "6.1. Adjustment and Measurement Instructions.").

Playback equalization level can be varied by the modification of R110 (R210) and R111 (R211).

Following are the details for level modification:

Approx. +1 dB	R111 (R211):	3.0K
	R110 (R210):	4.3K
0 dB	R111 (R211):	3.3K
	R110 (R210):	4.7K
Approx. −1 dB	R111 (R211):	3.6K
	R110 (R210):	5.1K

(b) Peaking Adjustment (for high frequency response)

This adjustment will be required when playback level is not sufficient at 20 kHz PB Frequency Response Tape (refer to step 8 in "6.1. Adjustment and Measurement Instructions").

Peaking portion compensates the gap loss of the playback head.

Peaking level is varied by the short circuit of R112 (R212) or R113 (R213) as illustrated in the figure.

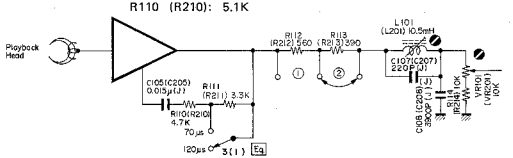

Fig. 6.13 Playback Eq. Amp.

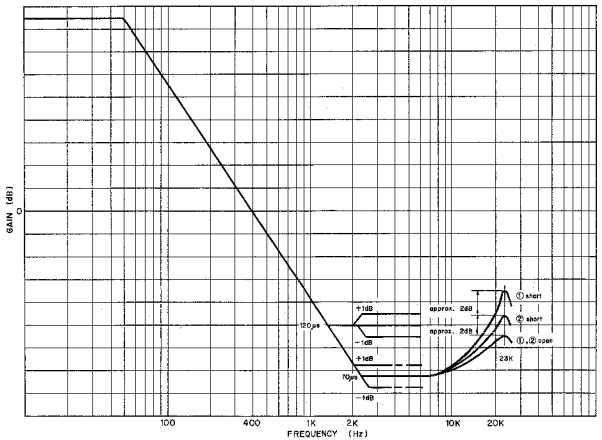

Fig. 6.12 Playback Equalization Curve

(2) Record Current Frequency Response Adjustment

Record eq. peaking is adjusted for compensating the overall frequency response when playback frequency response is completed.

Normally however peaking frequency is pre-adjusted to approx. 23 kHz in record mode. See Fig. 6.14.

(a) For ZX Tape

1) Feed in 400 Hz (0 dB), then record and play it back. Adjust bias current by VR103 (VR203) on the Switch P.C.B. to obtain a 0.8% distortion.
2) Feed in 10 kHz and 400 Hz (−20 dB), then record and play it back.
   Check the difference of the levels between 10 kHz and 400 Hz, and mount an additional capacitor in parallel with the C119 (C219) on the Switch P.C.B. from the dip side of the printed circuit board depending upon the difference of the levels against 400 Hz. See Fig. 6.15.

	Add	Total
0 dB	0	680 pF
−1 dB	330 pF	1010 pF
−2 dB	680 pF	1360 pF

3) Feed in 22 kHz (−20 dB), then record and play it back.
   Adjust record peaking coil L102 (L202) to obtain flat overall frequency response.

(b) For SX Tape

1) Feed in 15 kHz and 400 Hz (−20 dB), then record and play it back.
   Adjust bias current by VR102 (VR202) on the Switch P.C.B. to obtain flat overall frequency response.
2) Feed in 20 kHz and 400 Hz (−20 dB), then record and play it back.
   And check to insure that the overall frequency response is flat.

(c) For EX Tape

1) Feed in 15 kHz and 400 Hz (−20 dB), then record and play it back.
   Adjust bias current by VR101 (VR201) on the Switch P.C.B. to obtain flat overall frequency response.
2) Feed in 20 kHz and 400 Hz (−20 dB), then record and play it back.
   And check to insure that the overall frequency response is flat.

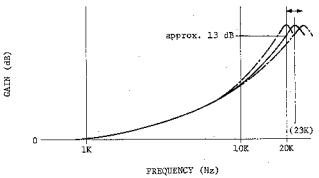

Fig. 6.14 Record Peaking Curve

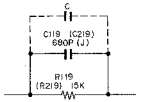

Fig. 6.15

6.3. Dolby NR Circuit Check

Dolby NR circuit incorporates a Dolby B-Type NR IC (μA7300PC) which has no adjustment point.
Perform the following checks and make sure that the IC operates accurately i.e., accuracy of frequency response through IC.

(1) Playback Dolby NR Circuit (IC101 (IC201) on the Main P.C.B.)

Signal Source: 5 kHz to No. 9 pin of IC101 and IC201
Output Connection: VTVM to the test points TP101 and TP201 on the Main P.C.B.
Mode: Stop
Monitor SW – Tape
Dolby NR SW – OUT/IN

(a) Connect a VTVM to TP101 (TP201) on the Main P.C.B.
Feed in 5 kHz to No. 9 pin of IC101 (IC201) and adjust the generator output control so that the VTVM may read 7.6 mV at each test point.
(b) Set the Dolby NR Switch to IN. Check to insure that the level at TP101 (TP201) is 3 mV ± 1.5 dB.

(2) Record Dolby NR Circuit (IC101 (IC201) on the Switch P.C.B.)

Signal Source: 5 kHz to INPUT Jacks
Output Connection: VTVM to the output side of C118 (C218) on the Switch P.C.B.
Mode: Stop
Monitor SW – Source

(a) Connect a VTVM to TP101 (TP201) on the Main P.C.B.
Feed in 5 kHz and adjust the input level so that the VTVM may read 100 mV (0 dB) at each test point. Pointer on the meter will indicate 0 dB.
(b) Remove the VTVM from TP101 (TP201) and reconnect it to the output side of C118 (C218). Check to insure that the VTVM indicates approx. 560 mV.
(c) Decrease the input level (0 dB) by 20 dB or 30 dB. Check to insure that the level at output side of C118 (C218) corresponds to the following with Dolby NR Switch IN and OUT.

Input Level	Capacitor Output Level		
(f=5 kHz)	Dolby NR OUT	Dolby NR IN	Difference between IN and OUT
–20 dB	–20 dB	–16.8 dB ± 1.5 dB	3.2 dB ± 1.5 dB
–30 dB	–30 dB	–21.8 dB ± 1.5 dB	8.2 dB ± 1.5 dB

7. MOUNTING DIAGRAMS

Note: Mounting diagram shows a dip side view of the printed circuit board.

7.1. Control Switch P.C.B. Ass'y

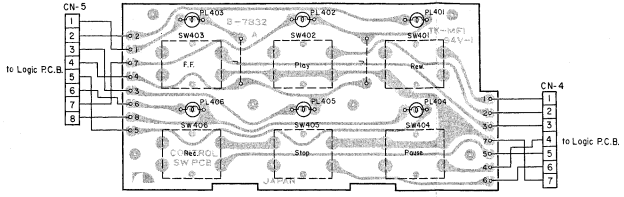

Fig. 7.1

7.2. Lamp P.C.B. B Ass'y

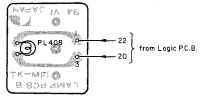

Fig. 7.2

7.3. Lamp P.C.B. C Ass'y

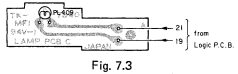

Fig. 7.3

7.4. RAMM P.C.B. Ass'y

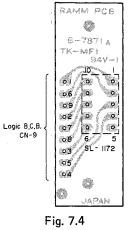

Fig. 7.4

Schematic Ref. No.	Part No.	Description	Schematic Ref. No.	Part No.	Description
	BA04071A	**Control Switch P.C.B. Ass'y**		**BA04209A**	**RAMM P.C.B. Ass'y**
	0B07832A	Control Switch P.C.B.		0B07871A	RAMM P.C.B.
SW401-406	0B07219A	Semi-switch	CN9	0B08712A	9P-H Connector Ass'y
PL401-406	0B08552A	Lamp 12V 25mA		0B06246A	Segment LED (1 pce.)
CN4	0B08631B	7P-H Connector A Ass'y			
CN5	0B08630B	8P-H Connector A Ass'y			
	BA04062A	**Lamp P.C.B. B Ass'y**			
	0B07838A	Lamp P.C.B. B			
PL408	0B08586A	Lamp 12V 60mA			
	BA04063A	**Lamp P.C.B. C Ass'y**			
	0B07840A	Lamp P.C.B. C			
PL409	0B08586A	Lamp 12V 60mA			

Schematic Ref. No.	Part No.	Description
	BA04202A	**Fuse P.C.B. Ass'y (U.S.A. & Canada)**
	0B07842A	Fuse P.C.B.
F1	0B08374A	Fuse 1A 250V
M2	0B08342A	Spark Killer
	0M04075A	Fuse Caution A112 (1 pce.)
	0M03782A	Fuse Label 1A (1 pce.)
	0J03834B	Fuse P.C.B. Holder (1 pce.)
	0E00606A	Screw M3x6 Philips Pan Head (3A) (2 pcs.)
	0E00752A	Eyelet (6 pcs.)
	BA04203A	**Fuse P.C.B. Ass'y (Japan)**
	0B07842A	Fuse P.C.B.
F1	0B08686A	Fuse 1A 250V
M2	0B08363A	Spark Killer
	0M03782A	Fuse Label 1A (1 pce.)
	0J03834B	Fuse P.C.B. Holder (1 pce.)
	0E00606A	Screw M3x6 Philips Pan Head (3A) (2 pcs.)
	0E00752A	Eyelet (6 pcs.)
	BA04206A	**Fuse P.C.B. Ass'y (Others)**
	0B07842A	Fuse P.C.B.
F1	0B08263A	Fuse T 315mA 250V
F4,5	0B08161A	Fuse T 630mA 250V
M2	0B08240A	Spark Killer
	0B08349A	Fuse Clip (4 pcs.)
	0M04073A	Fuse Label 315mA (1 pce.)
	0M04072A	Fuse Label 630mAx2 (1 pce.)
	0J03834B	Fuse P.C.B. Holder (1 pce.)
	0E00606A	Screw M3x6 Philips Pan Head (3A) (2 pcs.)
	0E00752A	Eyelet (6 pcs.)
	BA04205A	**Fuse P.C.B. Ass'y (UK & Australia)**
	0B07842A	Fuse P.C.B.
F1	0B08665A	Fuse T 160mA 250V
F4,5	0B08161U	Fuse T 630mA 250V
M2	0B08240A	Spark Killer
	0B08349A	Fuse Clip (6 pcs.)
	0M04066A	Fuse Label 160mA (1 pce.)
	0M04072A	Fuse Label 630mAx2 (1 pce.)
	0J03834B	Fuse P.C.B. Holder (1 pce.)
	0E00606A	Screw M3x6 Philips Pan Head (3A) (2 pcs.)
	0E00752A	Eyelet (6 pcs.)
	BA04204A	**Fuse P.C.B. Ass'y (220V Class 2)**
	0B07842A	Fuse P.C.B.
F1	0B08665A	Fuse T160mA 250V
F4,5	0B08161U	Fuse T630mA 250V
M2,3	0B08445A	Spark Killer
	0B08349A	Fuse Clip (6 pcs.)
	0M04066A	Fuse Label 160mA (1 pce.)
	0M04072A	Fuse Label 630mA x 2 (1 pce.)
	0J03834B	Fuse P.C.B. Holder (1 pce.)
	0E00606A	Screw M3x6 Philips Pan Head (3A) (2 pcs.)
	0E00752A	Eyelet (6 pcs.)

7.5. Fuse P.C.B. Ass'y

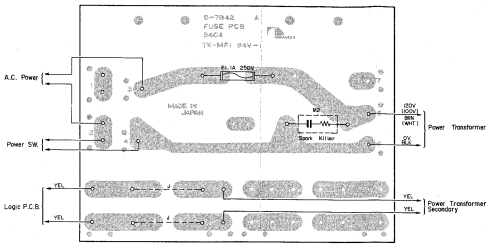

Fig. 7.5.1 U.S.A., Canada and Japan

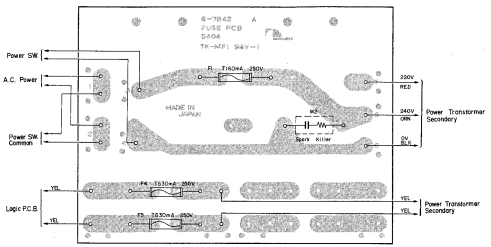

Fig. 7.5.3 UK and Australia

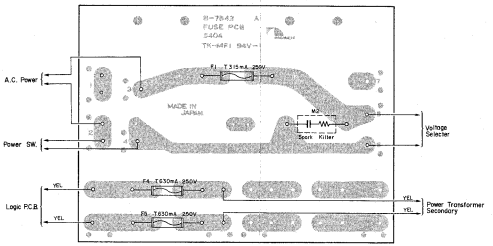

Fig. 7.5.2 Others

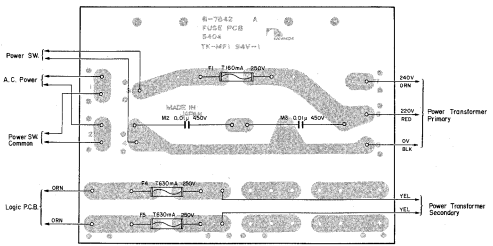

Fig. 7.5.4 220 V Class 2

Schematic Ref. No.	Part No.	Description		Schematic Ref. No.	Part No.	Description	
	BA04207A	**Auto Azimuth P.C.B. Ass'y**			**BA04176A**	**Pin Jack P.C.B. Ass'y**	
	0B07872A	Auto Azimuth P.C.B.			0B07835A	Pin Jack P.C.B.	
IC901,905	0B06124B	IC	μPC4558C	FC5	0B05238A	5P Flat Cable	50mm
IC902	0B06216A	IC	RC4556D		0B08709A	Jack Unit	(1 pce.)
IC903	0B06213A	IC	TC4013BP		0E00037A	Earth Lug B-5	(1 pce.)
IC904	0B06244A	IC	TC4073BP				
Q901,902	0B01872A	Transistor	2SC945 (L)		**BA04070A**	**Auto Shut-off P.C.B. Ass'y**	
905,906					0B07839A	Auto Shut-off P.C.B.	
907,909				Q449	0B01872A	Transistor	2SC945 (L)
910				Q450	0B06228A	Photo Transistor	PH104
Q903	0B06066A	Transistor	2SD471	D470	0B06181A	Silicon Diode	1SS53
Q904	0B06069A	Transistor	2SB564	R603	0B05671A	Carbon Resistor	2.2M ERD-25T J
Q908	0B06013A	Transistor	2SA733	R604	0B05615A	Carbon Resistor	22K ERD-25T J
D701,702	0B06181A	Silicon Diode	1SS53	R605	0B09215A	Fail Safe Type Resistor	100 RDF-25S J
801,802			(10 pcs.)	R606	0B01888A	Carbon Resistor	10K ERD-25T J
901-905				C453	0B01405A	Electrolytic Capacitor	1μ 50V
909				PL407	0B08552A	Lamp	12V 25mA
VR901	0B09107A	Semi-fixed Volume	500K				
R701,801	0B05625A	Carbon Resistor	220K ERD-25T J				
917,919							
R702,802	0B01889A	Carbon Resistor	100K ERD-25T J				
929,930							
R703,803	0B05576A	Carbon Resistor	470 ERD-25T J				
R704,804	0B05627A	Carbon Resistor	330K ERD-25T J				
904,927							
R705,706	0B05509A	Carbon Resistor	33K ERD-25T J				
805,806							
905,906							
907,909							
910,925							
R707,807	0B05671A	Carbon Resistor	2.2M ERD-25T J				
920,923							
928							
R901,902	0B05776A	Carbon Resistor	1M ERD-25T J				
903,918							
R908	0B01681A	Carbon Resistor	3.3K ERD-25T J				
R911,912	0B01887A	Carbon Resistor	5.6K ERD-25T J				
R913,922	0B01888A	Carbon Resistor	10K ERD-25T J				
R914,916	0B05615A	Carbon Resistor	22K ERD-25T J				
924,931							
R915	0B09380A	Carbon Resistor	1.5M ERD-25T J				
R921	0B05692A	Carbon Resistor	68K ERD-25T J				
R926	0B01682A	Carbon Resistor	6.8K ERD-25T J				
R932	0B05626A	Carbon Resistor	150K ERD-25T J				
R933	0B05641A	Carbon Resistor	47K ERD-25T J				
C701,801	0B01405A	Electrolytic Capacitor	1μ 50V				
901,902							
C702,802	0B01412A	Electrolytic Capacitor	10μ 16V				
C704,804	0B01802A	Mylar Capacitor	2200P 50V J				
C705,805	0B01676A	Mylar Capacitor	0.056μ 50V				
C903	0B09372A	Electrolytic Capacitor	2.2μ 25V				
C904	0B05772A	Tantalum Capacitor	0.22μ 35V				
CN10	0B08656A	2P-T Post					

7.6. Auto Azimuth P.C.B. Ass'y

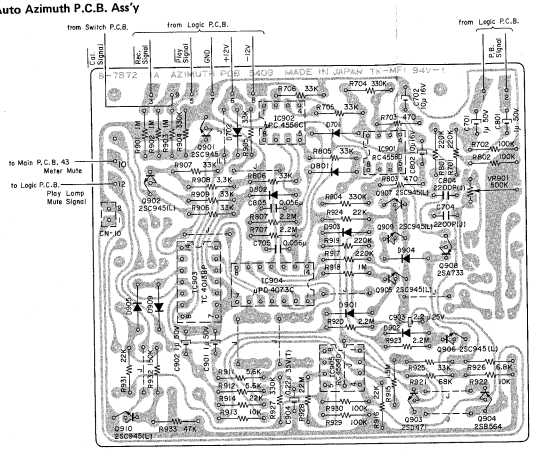

Fig. 7.6 Note: Diode is 1SS53 unless otherwise specified.

7.7. Pin Jack P.C.B. Ass'y

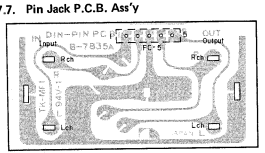

Fig. 7.7

7.8. Auto Shut-off P.C.B. Ass'y

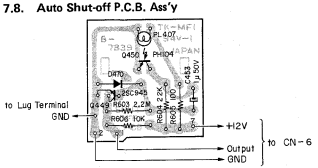

Fig. 7.8

Note: Diode is 1SS53 unless otherwise specified.

7.9. Switch P.C.B. Ass'y

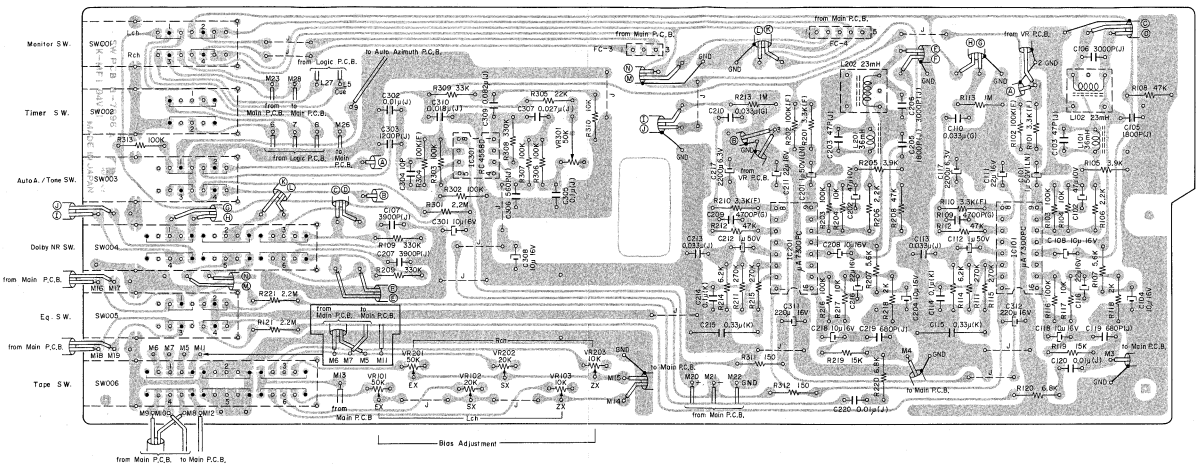

Fig. 7.9

Note: Diode is 1SS53 unless otherwise specified.

7.10. Record Cal. P.C.B. Ass'y

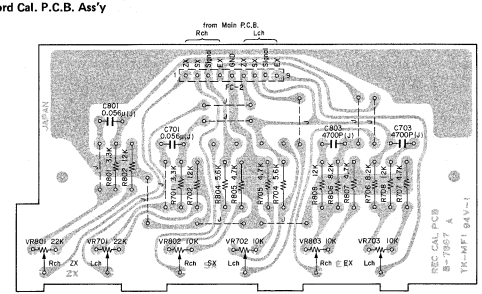

Fig. 7.10

7.11. Volume P.C.B. Ass'y

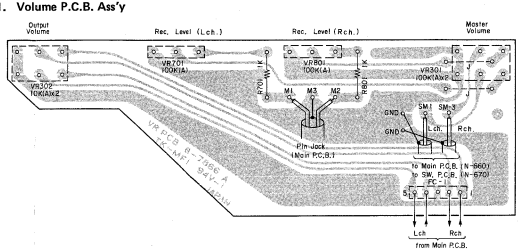

Fig. 7.11

Schematic Ref. No.	Part No.	Description
	BA04183A	**Switch P.C.B. Ass'y**
	– Tone Osc. –	
IC301	0B06124B	IC RC4558D
VR301	0B07058A	Semi-fixed Volume 50K
R301	0B05671A	Carbon Resistor 2.2M ERD-25T J
R302,303 306,307	0B01889A	Carbon Resistor 100K ERD-25T J
R304	0B09305A	Metal Film Resistor 100K SN14K2E F
R305	0B05615A	Carbon Resistor 22K ERD-25T J
R308	0B05627A	Carbon Resistor 330K ERD-25T J
R309	0B05509A	Carbon Resistor 33K ERD-25T J
R310	0B01888A	Carbon Resistor 10K ERD-25T J
C301,308	0B01412A	Electrolytic Capacitor 10μ 16V
C302	0B05681A	Mylar Capacitor 0.01μ 50V J
C303	0B05687A	Mylar Capacitor 1200P 50V J
C304	0B09277A	Ceramic Capacitor 10P 50V J
C305	0B01780A	Mylar Capacitor 0.1μ 50V J
C306	0B09323A	PP Capacitor 560P 100V J
C307	0B09045A	Mylar Capacitor 0.027μ 50V J
C309	0B05685A	Mylar Capacitor 0.082μ 50V J
C310	0B05832A	Mylar Capacitor 0.018μ 50V J
	– Rec. Dolby NR –	
IC101,201	0B06200A	IC μA7300PC
L101,201	0B03919B	Inductor 36mH
L102,202	0B03563A	19K Coil 23mH
R101,110 201,210	0B09317A	Metal Film Resistor 3.3K SN14K2E F
R102,202	0B09305A	Metal Film Resistor 100K SN14K2E F
R103,116 203,216	0B01889A	Carbon Resistor 100K ERD-25T J
R104,117 204,217	0B01888A	Carbon Resistor 10K ERD-25T J
R105,205	0B05675A	Carbon Resistor 3.9K ERD-25T J
R106,206	0B05622A	Carbon Resistor 2.2K ERD-25T J
R107,207	0B01887A	Carbon Resistor 5.6K ERD-25T J
R108,112 208,212	0B05641A	Carbon Resistor 47K ERD-25T J
R109,209	0B05627A	Carbon Resistor 330K ERD-25T J
R111,115 211,215	0B05620A	Carbon Resistor 270K ERD-25T J
R113,213	0B05776A	Carbon Resistor 1M ERD-25T J
R114,214	0B09271A	Carbon Resistor 6.2K ERD-25T J
R118,218	0B09301A	Carbon Resistor 2K ERD-25T J
R119,219	0B01683A	Carbon Resistor 15K ERD-25T J
R120,220	0B01682A	Carbon Resistor 6.8K ERD-25T J
R121,221	0B05671A	Carbon Resistor 2.2M ERD-25T J
R311,312	0B09213A	Fail Safe Type Resistor 150 RDF-25S J
C101,201	0B09223A	Electrolytic Capacitor 1μ 50V (LN)
C102,202	0B01836A	Electrolytic Capacitor 47μ 10V
C103,203	0B09242A	Mica Capacitor 47P 50V J
C104,118 204,218	0B01412A	Electrolytic Capacitor 10μ 16V
C105,205	0B01913A	Mylar Capacitor 1800P 50V J
C106,206	0B09262A	PP Capacitor 3000P 100V J
C107,207	0B01804A	Mylar Capacitor 3900P 50V J
C108,208	0B09386A	Electrolytic Capacitor 10μ 16V (LN)
C109,209	0B09191A	PP Capacitor 4700P 100V G
C110,210	0B09240A	PP Capacitor 0.033μ 100V G

Schematic Ref. No.	Part No.	Description
C111,116 211,216	0B01862A	Electrolytic Capacitor 22μ 16V
C112,212	0B01405A	Electrolytic Capacitor 1μ 50V
C113,213	0B05583A	Mylar Capacitor 0.033μ 50V J
C114,214	0B01603A	Mylar Capacitor 0.1μ 50V K
C115,215	0B01602A	Mylar Capacitor 0.33μ 50V K
C117,217	0B09257A	Electrolytic Capacitor 2200μ 6.3V
C119,219	0B09235A	PP Capacitor 680P 100V J
C120,220	0B05681A	Mylar Capacitor 0.01μ 50V J
C311,312	0B01398A	Electrolytic Capacitor 220μ 16V
	0B06201A	IC Socket 16P (2 pcs.)
	– Miscellaneous –	
	0B07869A	Switch P.C.B.
VR101,201	0B07058A	Semi-fixed Volume 50K
VR102,202	0B07215A	Semi-fixed Volume 20K
VR103,203	0B07162A	Semi-fixed Volume 10K
R313	0B01889A	Carbon Resistor 100K ERD-25T J
SW001	0B07286A	Lever Switch 4-2 O
SW002	0B07284A	Lever Switch 2-3 S
SW003,005	0B07285A	Lever Switch 4-2 S
SW004,006	0B07304A	Lever Switch 6-3 S
FC3	0B05240A	3P Flat Cable 50mm
FC4	0B05238A	5P Flat Cable 50mm
	BA04188A	**Record Cal. P.C.B. Ass'y**
	0B07867A	Record Cal. P.C.B.
VR701,801	0B07276A	Semi-fixed Volume 22K
VR702,703 802,803	0B07319A	Semi-fixed Volume 10K
R701,801	0B01681A	Carbon Resistor 3.3K ERD-25T J
R702,708 802,808	0B09263A	Carbon Resistor 12K ERD-25T J
R704,804	0B01887A	Carbon Resistor 5.6K ERD-25T J
R705,707 805,807	0B01846A	Carbon Resistor 4.7K ERD-25T J
R706,806	0B01856A	Carbon Resistor 8.2K ERD-25T J
C701,801	0B05813A	Mylar Capacitor 0.056μ 50V J
C703,803	0B05652A	Mylar Capacitor 4700P 50V J
FC2	0B05245A	9P Flat Cable 90mm
	BA04175A	**Volume P.C.B. Ass'y**
	0B07866A	Volume P.C.B.
VR301	0B07203A	Volume 100K (A) x 2
VR302	0B07204A	Volume 10K (A) x 2
VR701,801	0B07202A	Volume 100K (A)
R701,801	0B01857A	Carbon Resistor 1K ERD-25T J
FC1	0B05238A	5P Flat Cable 50mm

7.12. Main P.C.B. Ass'y

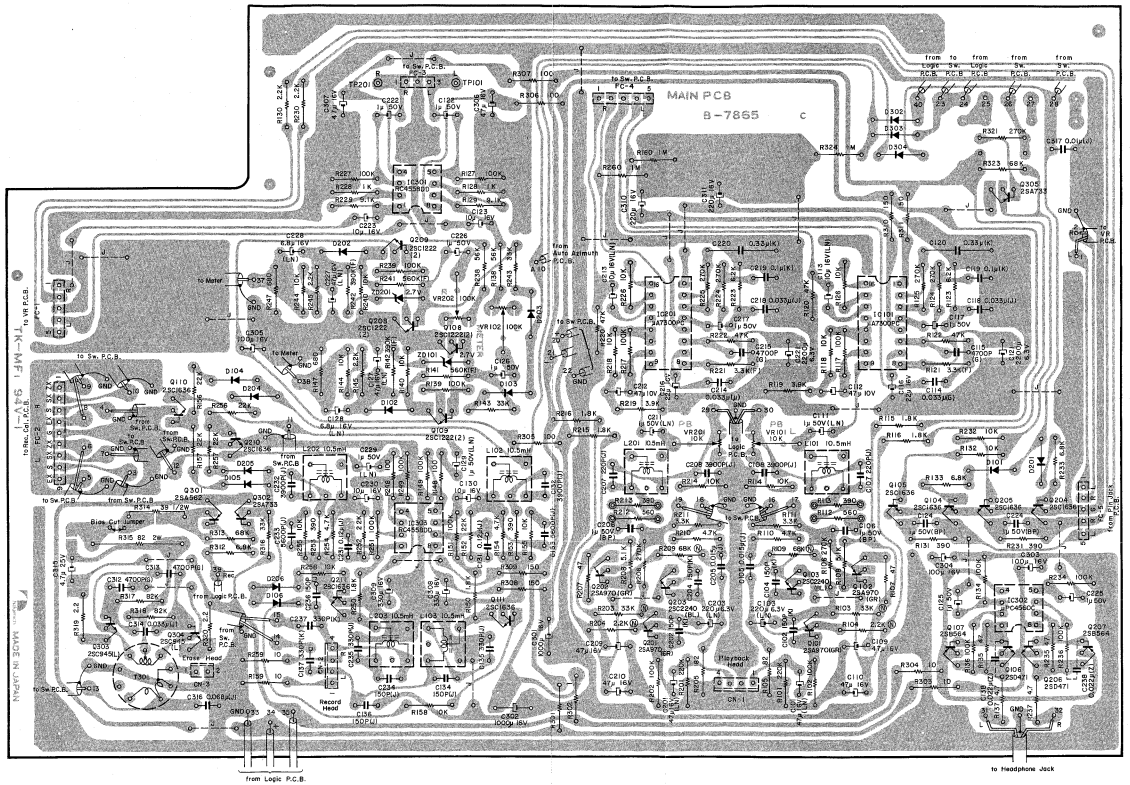

Fig. 7.12

Note: Diode is 1SS53 unless otherwise specified.

Schematic Ref. No.	Part No.	Description
	BA04184A	Main P.C.B. Ass'y
	– PB Eq. Amp. –	
Q101,102 201,202	0B06180A	Transistor 2SA970 (GR)
Q103,203	0B06142A	Transistor 2SC2240 (BL)
L101,201	0B00068A	Trap Coil 10.5mH
VR101,201	0B07236A	Semi-fixed Volume 10K
R101,201	0B05625A	Carbon Resistor 220K ERD-25T J
R102,202	0B01889A	Carbon Resistor 100K ERD-25T J
R103,203	0B09310A	Carbon Resistor 33K ERD-25TS J (Noiseless)
R104,204	0B09309A	Carbon Resistor 2.2K ERD-25TS J (Noiseless)
R105,205	0B05631A	Carbon Resistor 82 ERD-25T J
R106,206	0B05620A	Carbon Resistor 270K ERD-25T J
R107,207	0B01706A	Carbon Resistor 47 ERD-25T J
R108,208	0B09314A	Carbon Resistor 5.1K ERD-25T J
R109,209	0B09311A	Carbon Resistor 68K ERD-25TS J (Noiseless)
R110,210	0B01846A	Carbon Resistor 4.7K ERD-25T J
R111,211	0B01681A	Carbon Resistor 3.3K ERD-25T J
R112, 212	0B05575A	Carbon Resistor 560 ERD-25T J
R113,213	0B05691A	Carbon Resistor 390 ERD-25T J
R114,214	0B01888A	Carbon Resistor 10K ERD-25T J
R115,116 215,216	0B05614A	Carbon Resistor 1.8K ERD-25T J
C101,201	0B09218A	Electrolytic Capacitor 47μ 16V (LN)
C102,104 202,204	0B09281A	Ceramic Capacitor 150P 50V K
C103,203	0B09151A	Electrolytic Capacitor 220μ 6.3V (LN)
C105,205	0B05557A	Mylar Capacitor 0.015μ 50V J
C106,206	0B09187A	Electrolytic Capacitor 1μ 50V (BP)
C107,207	0B09247A	Mica Capacitor 220P 50V J
C108,208	0B01804A	Mylar Capacitor 3900P 50V J
C109,110 209,210	0B01403A	Electrolytic Capacitor 47μ 16V
	– PB Dolby NR –	
IC101,201	0B06200A	IC μA7300PC
R117,217	0B01889A	Carbon Resistor 100K ERD-25T J
R118,126 218,226	0B01888A	Carbon Resistor 10K ERD-25T J
R119,219	0B05675A	Carbon Resistor 3.9K ERD-25T J
R120,122 220,222	0B05641A	Carbon Resistor 47K ERD-25T J
R121,221	0B09317A	Metal Film Resistor 3.3K SN14K2E F
R123,223	0B09271A	Carbon Resistor 6.2K ERD-25T J
R124,125 224,225	0B05620A	Carbon Resistor 270K ERD-25T J
R160,260	0B05776A	Carbon Resistor 1M ERD-25T J
R310,311	0B09213A	Fail Safe Type Resistor 150 RDF-25S J
C111,211	0B09223A	Electrolytic Capacitor 1μ 50V (LN)
C112,212	0B01836A	Electrolytic Capacitor 47μ 10V
C113,213	0B09386A	Electrolytic Capacitor 10μ 16V (LN)
C114,214	0B09240A	PP Capacitor 0.033μ 100V G
C115,215	0B09191A	PP Capacitor 4700P 100V G
C116,216	0B01862A	Electrolytic Capacitor 22μ 16V
C117,217	0B01405A	Electrolytic Capacitor 1μ 50V
C118,218	0B05583A	Mylar Capacitor 0.033μ 50V J
C119,219	0B01603A	Mylar Capacitor 0.1μ 50V K
C120,220	0B01602A	Mylar Capacitor 0.33μ 50V K
C121,221	0B09257A	Electrolytic Capacitor 2200μ 6.3V
C310,311	0B01398A	Electrolytic Capacitor 220μ 16V
	– Rec. Amp. –	
IC303	0B06146A	IC RC4558DD
Q110,111 210,211	0B06070A	Transistor 2SC1636
Q302	0B06013A	Transistor 2SA733
D104,105 106,204 205,206 302,303	0B06181A	Silicon Diode 1SS53
L102,103 202,203	0B00068A	Trap Coil 10.5mH
R148,248	0B01679A	Carbon Resistor 100 ERD-25T J
R149,151 249,251	0B01889A	Carbon Resistor 100K ERD-25T J
R150,250	0B05614A	Carbon Resistor 1.8K ERD-25T J
R152,156 157,252 256,257	0B05615A	Carbon Resistor 22K ERD-25T J
R153,253	0B05691A	Carbon Resistor 390 ERD-25T J
R154,254	0B01846A	Carbon Resistor 4.7K ERD-25T J
R155,158 255,258	0B01888A	Carbon Resistor 10K ERD-25T J
R308,309	0B09213A	Fail Safe Type Resistor 150 RDF-25S J
R313	0B05692A	Carbon Resistor 68K ERD-25T J
R316	0B05509A	Carbon Resistor 33K ERD-25T J
R324	0B05776A	Carbon Resistor 1M ERD-25T J
C129,229	0B09223A	Electrolytic Capacitor 1μ 50V (LN)
C130,230	0B01412A	Electrolytic Capacitor 10μ 16V
C131,231	0B05909A	Mylar Capacitor 0.12μ 50V J
C132,232	0B01804A	Mylar Capacitor 3900P 50V J
C133,233	0B05659A	Mylar Capacitor 5600P 50V J
C134,136 234,236	0B09246A	Mica Capacitor 150P 50V J
C135,235	0B09322A	PP Capacitor 330P 100V J
C308,309	0B01502A	Electrolytic Capacitor 330μ 16V
	– Line Amp. –	
IC301	0B06146A	IC RC4558DD
Q104,105 204,205	0B06070A	Transistor 2SC1636
Q305	0B06013A	Transistor 2SA733
D101,201	0B06181A	Silicon Diode 1SS53
R127,227	0B01839A	Carbon Resistor 100K ERD-25T J
R128,228	0B01857A	Carbon Resistor 1K ERD-25T J
R129,229	0B05694A	Carbon Resistor 9.1K ERD-25T J
R131,231	0B05691A	Carbon Resistor 390 ERD-25T J
R132,232	0B01888A	Carbon Resistor 10K ERD-25T J
R133,233	0B01682A	Carbon Resistor 6.8K ERD-25T J
R301,302	0B09214A	Fail Safe Type Resistor 1 RDF-25S J
R306,307	0B09215A	Fail Safe Type Resistor 100 RDF-25S J
R321	0B05620A	Carbon Resistor 270K ERD-25T J
R323	0B05692A	Carbon Resistor 68K ERD-25T J
C122,222	0B01405A	Electrolytic Capacitor 1μ 50V
C123,223	0B01412A	Electrolytic Capacitor 10μ 16V
C124,224	0B09187A	Electrolytic Capacitor 1μ 50V (BP)
C301,302	0B01397A	Electrolytic Capacitor 1000μ 16V
C306,307	0B01403A	Electrolytic Capacitor 47μ 16V
	– Headphone Amp. –	
IC302	0B06217A	IC RC4560D
Q106,206	0B06066A	Transistor 2SD471
Q107,207	0B06069A	Transistor 2SB564
R134,136 234,236	0B01889A	Carbon Resistor 100K ERD-25T J
R135,235	0B01706A	Carbon Resistor 47 ERD-25T J
R137,237	0B09321A	Fail Safe Type Resistor 4.7 RDF-25S J
R303,304	0B09216A	Fail Safe Type Resistor 10 RDF-25S J
C125,225	0B01405A	Electrolytic Capacitor 1μ 50V
C138,238	0B09291A	Ceramic Capacitor 0.022μ 50V Z
C303,304	0B01400A	Electrolytic Capacitor 100μ 16V
	– Bias Osc. –	
Q301	0B01426A	Transistor 2SA562
Q303,304	0B01872A	Transistor 2SC945 (L)
T301	0B06613A	Osc. Coil
R159,259	0B05936A	Carbon Resistor 10 ERD-25T J
R312	0B01682A	Carbon Resistor 6.8K ERD-25T J
R314	0B09296A	Fail Safe Type Resistor 39 RSF-1/2S J
R315	0B09295A	Fail Safe Type Resistor 82 RSF-2B J
R317,318	0B05668A	Carbon Resistor 82K ERD-25T J
R319,320	0B09212A	Fail Safe Type Resistor 2.2 RDF-25S J
C137,237	0B09286A	Ceramic Capacitor 470P 50V K
C312,313	0B09191A	PP Capacitor 4700P 100V G
C314	0B05583A	Mylar Capacitor 0.033μ 50V J
C315	0B01402A	Electrolytic Capacitor 4.7μ 25V
C316	0B09254A	PP Capacitor 0.068μ 100V J
	– Meter Amp. –	
Q108,109 208,209	0B06062A	Transistor 2SC1222 (2)
ZD101,201	0B06191A	Zener Diode 2.7EB
D102,103 202,203 304	0B06181A	Silicon Diode 1SS53
VR102,202	0B03832A	Semi-fixed Volume 100K
R138,238	0B05508A	Carbon Resistor 56K ERD-25T J
R139,239	0B01889A	Carbon Resistor 100K ERD-25T J
R140,144 240,244	0B01888A	Carbon Resistor 10K ERD-25T J
R141,241	0B09318A	Metal Film Resistor 560K SN14K2E F
R142,242	0B09338A	Metal Film Resistor 390K SN14K2E F
R143,243	0B05509A	Carbon Resistor 33K ERD-25T J
R145,245	0B05622A	Carbon Resistor 2.2K ERD-25T J
R147,247	0B05794A	Carbon Resistor 680 ERD-25T J
R305	0B09215A	Fail Safe Type Resistor 100 RDF-25S J
C126,226	0B01405A	Electrolytic Capacitor 1μ 50V
C127,227	0B09218A	Electrolytic Capacitor 47μ 16V (LN)
C128,228	0B09219A	Electrolytic Capacitor 6.8μ 16V (LN)
C305	0B01400A	Electrolytic Capacitor 100μ 16V
	– Miscellaneous –	
	0B07865C	Main P.C.B.
R130,230	0B05622A	Carbon Resistor 2.2K ERD-25T J
C317	0B05681A	Mylar Capacitor 0.01μ 50V J
CN1,2	0B08654A	4P-T Post
CN3	0B08656A	2P-T Post

7.13. Logic P.C.B. Ass'y

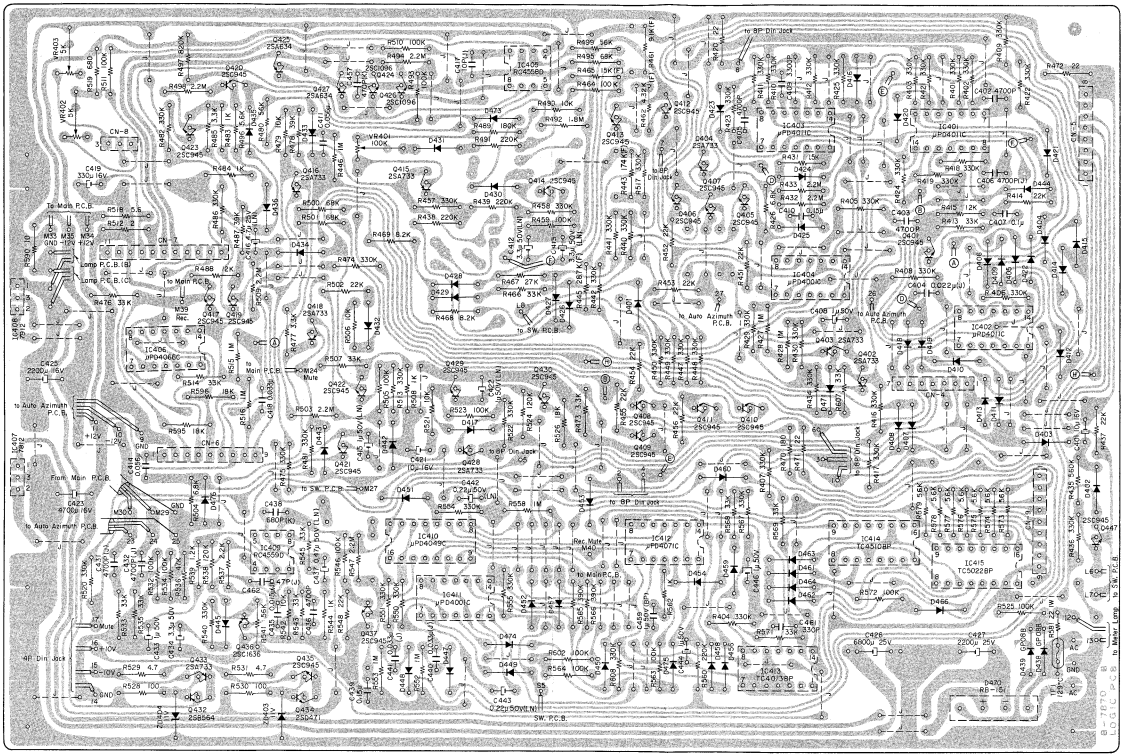

Fig. 7.13

Note: Diode is 1SS53 unless otherwise specified.

Schematic Ref. No.	Part No.	Description
	BA04185A	**Logic P.C.B. Ass'y**
	– Logic –	
IC401,402	0B06178A	IC μPD4011C
403		
IC404	0B06143A	IC μPD4001C
IC405	0B06124B	IC μPC4558C
IC406	0B06144A	IC μPD4066C
IC407	0B06192A	Regulator +12V μA7812
IC408	0B06193A	Regulator –12V μA7912
Q401	0B06100A	Transistor 2SC945 (A)
405-414		(21 pcs.)
417		
419-423		
429,430		
435,447		
Q402,403	0B06013A	Transistor 2SA733
404,415		
416,418		
428,433		
Q424,426	0B06020A	Transistor 2SC1096
Q425,427	0B06012A	Transistor 2SA634
Q432	0B06069A	Transistor 2SB564
Q434	0B06066A	Transistor 2SD471
ZD403,404	0B06231A	Zener Diode RD11EB2
D401-436	0B01909A	Silicon Diode 1S1555
442-444		(42 pcs.)
471,473		
476		
D438,439	0B06109A	Silicon Diode GP08B
D470	0B06183A	Diode Bridge RB151
VR401	0B03832A	Semi-fixed Volume 100K
VR402,403	0B03831A	Semi-fixed Volume 5K
R401-412	0B05627A	Carbon Resistor 330K ERD-25T J
416-419		(43 pcs.)
421-425		
429,430		
434,436		
440-442		
447-450		
457,458		
474,475		
481,482		
486,513		
517,520		
522		
R413,466	0B05509A	Carbon Resistor 33K ERD-25T J
476,507		
514,607		
R414,437	0B05615A	Carbon Resistor 22K ERD-25T J
451-456		(9 pcs.)
502		
R415,488	0B09263A	Carbon Resistor 12K ERD-25T J
R420,471	0B09049A	Fail Safe Type Resistor 22 ERD-14F J
472		
R426,504	0B01682A	Carbon Resistor 6.8K ERD-25T J
R427,428	0B05776A	Carbon Resistor 1M ERD-25T J
446,515		
516		
R431	0B05698A	Carbon Resistor 1.5K ERD-25T J

Schematic Ref. No.	Part No.	Description
R432,433	0B05671A	Carbon Resistor 2.2M ERD-25T J
494,498		
503,509		
R435	0B05784A	Carbon Resistor 560K ERD-25T J
R438,439	0B05625A	Carbon Resistor 220K ERD-25T J
491		
R443	0B09367A	Metal Film Resistor 174K SN14K2E F
R445	0B09366A	Metal Film Resistor 287K SN14K2E F
R461	0B09328A	Metal Film Resistor 9.1K SN14K2E F
R462	0B09365A	Metal Film Resistor 4.32K SN14K2E F
R459,464	0B01889A	Carbon Resistor 100K ERD-25T J
493,505		
510,511		
523,525		
R465	0B09340A	Metal Film Resistor 15K SN14K2E F
R467	0B05743A	Carbon Resistor 27K ERD-25T J
R468,469	0B01856A	Carbon Resistor 8.2K ERD-25T J
R470	0B05578A	Carbon Resistor 180 ERD-25T J
R473,477	0B01681A	Carbon Resistor 3.3K ERD-25T J
485		
R478,487	0B01854A	Carbon Resistor 39K ERD-25T J
R479,490	0B01888A	Carbon Resistor 10K ERD-25T J
506,521		
R480,499	0B05508A	Carbon Resistor 56K ERD-25T J
R483,484	0B01857A	Carbon Resistor 1K ERD-25T J
508		
R489	0B05640A	Carbon Resistor 180K ERD-25T J
R492	0B05680A	Carbon Resistor 1.8M ERD-25T J
R495,500	0B05692A	Carbon Resistor 68K ERD-25T J
501		
R496	0B01887A	Carbon Resistor 5.6K ERD-25T J
R497	0B09320A	Carbon Resistor 820K ERD-25T J
R512	0B09381A	Fail Safe Type Resistor 2 RDF-25S J
R518	0B09217A	Fail Safe Type Resistor 5.6 RDF-25S J
R519	0B05794A	Carbon Resistor 680 ERD-25T J
R524	0B05621A	Carbon Resistor 120K ERD-25T J
R526,595	0B05560A	Carbon Resistor 18K ERD-25T J
596		
R528,530	0B09215A	Fail Safe Type Resistor 100 RDF-25S J
R529,531	0B09321A	Fail Safe Type Resistor 4.7 RDF-25S J
R581	0B09378A	Fail Safe Type Resistor 22 RSF-1B J
R590	0B09216A	Fail Safe Type Resistor 10 RDF-25S J
C401,421	0B01412A	Electrolytic Capacitor 10μ 16V
C402,403	0B05556A	Mylar Capacitor 4700P 50V
405,406		
C404	0B05582A	Mylar Capacitor 0.022μ 50V J
C407	0B00093A	Mylar Capacitor 0.1μ 50V
C408	0B01405A	Electrolytic Capacitor 1μ 50V
C409	0B09166A	Mylar Capacitor 3300P 50V
C410	0B00610A	Mylar Capacitor 0.15μ 50V
C411,414	0B01676A	Mylar Capacitor 0.056μ 50V
C412,413	0B09324A	Electrolytic Capacitor 3.3μ 50V (LN)
C415,422	0B09223A	Electrolytic Capacitor 1μ 50V (LN)
C416	0B09173A	Electrolytic Capacitor 4.7μ 25V (LN)
C417	0B09277A	Ceramic Capacitor 10P 50V J
C418	0B05513A	Mylar Capacitor 0.033μ 50V
C419	0B01502A	Electrolytic Capacitor 330μ 16V
C423	0B09377A	Electrolytic Capacitor 4700μ 16V
C425	0B01406A	Electrolytic Capacitor 2200μ 16V
C426	0B09374A	Electrolytic Capacitor 6800μ 25V
C427	0B05654A	Electrolytic Capacitor 2200μ 25V

Schematic Ref. No.	Part No.	Description
C457	0B09286A	Ceramic Capacitor 470P 50V K
CN4	0B08643A	7P-T Post
CN5	0B08644A	8P-T Post
CN6,9	0B08645A	9P-T Post
CN7	0B08655A	11P-T Post
CN8	0B08653A	3P-T Post
TF1	0B08715A	Thermal Fuse
	– RAMM –	
IC409	0B06127A	IC RC4559D
IC410	0B06250A	IC μPD4049C
IC411	0B06143A	IC μPD4001C
IC412	0B06214A	IC μPD4071C
IC413	0B06213A	IC TC4013BP
IC414	0B06212A	IC TC4510BP
IC415	0B06211A	IC TC5022BP
Q436	0B06070A	Transistor 2SC1636
Q437	0B06100A	Transistor 2SC945 (A)
D445	0B06181A	Silicon Diode 1SS53
447-454		(21 pcs.)
456-464		
466,474		
475		
R532,534	0B01889A	Carbon Resistor 100K ERD-25T J
546,563		
564,572		
602		
R533,535	0B05509A	Carbon Resistor 33K ERD-25T J
543,545		
568,569		
571		
R536	0B05641A	Carbon Resistor 47K ERD-25T J
R537	0B05622A	Carbon Resistor 2.2K ERD-25T J
R538	0B05621A	Carbon Resistor 120K ERD-25T J
R539	0B05623A	Carbon Resistor 1.2K ERD-25T J
R540,550	0B05627A	Carbon Resistor 330K ERD-25T J
551,554		
555,567		
608		
R541	0B05508A	Carbon Resistor 56K ERD-25T J
R542	0B01888A	Carbon Resistor 10K ERD-25T J
R544,562	0B01857A	Carbon Resistor 1K ERD-25T J
R547	0B05671A	Carbon Resistor 2.2M ERD-25T J
R548	0B05615A	Carbon Resistor 22K ERD-25T J
R552,553	0B05776A	Carbon Resistor 1M ERD-25T J
558		
R573,574	0B01887A	Carbon Resistor 5.6K ERD-25T J
575,576		
577,578		
579		
R560	0B05625A	Carbon Resistor 220K ERD-25T J
R565,566	0B05676A	Carbon Resistor 390K ERD-25T J
C431,432	0B05652A	Mylar Capacitor 4700P 50V J
436		
C433,444	0B01405A	Electrolytic Capacitor 1μ 50V
446		
C434	0B01863A	Electrolytic Capacitor 3.3μ 50V
C435	0B05557A	Mylar Capacitor 0.015μ 50V J
C437	0B09222A	Electrolytic Capacitor 0.47μ 50V (LN)
C438	0B09287A	Ceramic Capacitor 680P 50V K
C439	0B00610A	Mylar Capacitor 0.15μ 50V
C440,441	0B05583A	Mylar Capacitor 0.033μ 50V J

Schematic Ref. No.	Part No.	Description
C442,443	0B09220A	Electrolytic Capacitor 0.22μ 50V (LN)
C459	0B09187A	Electrolytic Capacitor 1μ 50V (BP)
C461	0B01180A	Ceramic Capacitor 330P 100V
C462	0B09280A	Ceramic Capacitor 47P 50V J
	– Miscellaneous –	
	0B07870B	Logic P.C.B.
	0J04103A	Heat Sink (1 pce.)
	0E00860A	BT Screw M3x6 Philips Binding Head (2 pcs.)
	0E00896A	Screw M3x6 Philips Binding Head (2 pcs.)
	0E00507A	Nut Hex. M3 (2 pcs.)

8. MECHANISM ASS'Y AND PARTS LIST

8.1. Synthesis

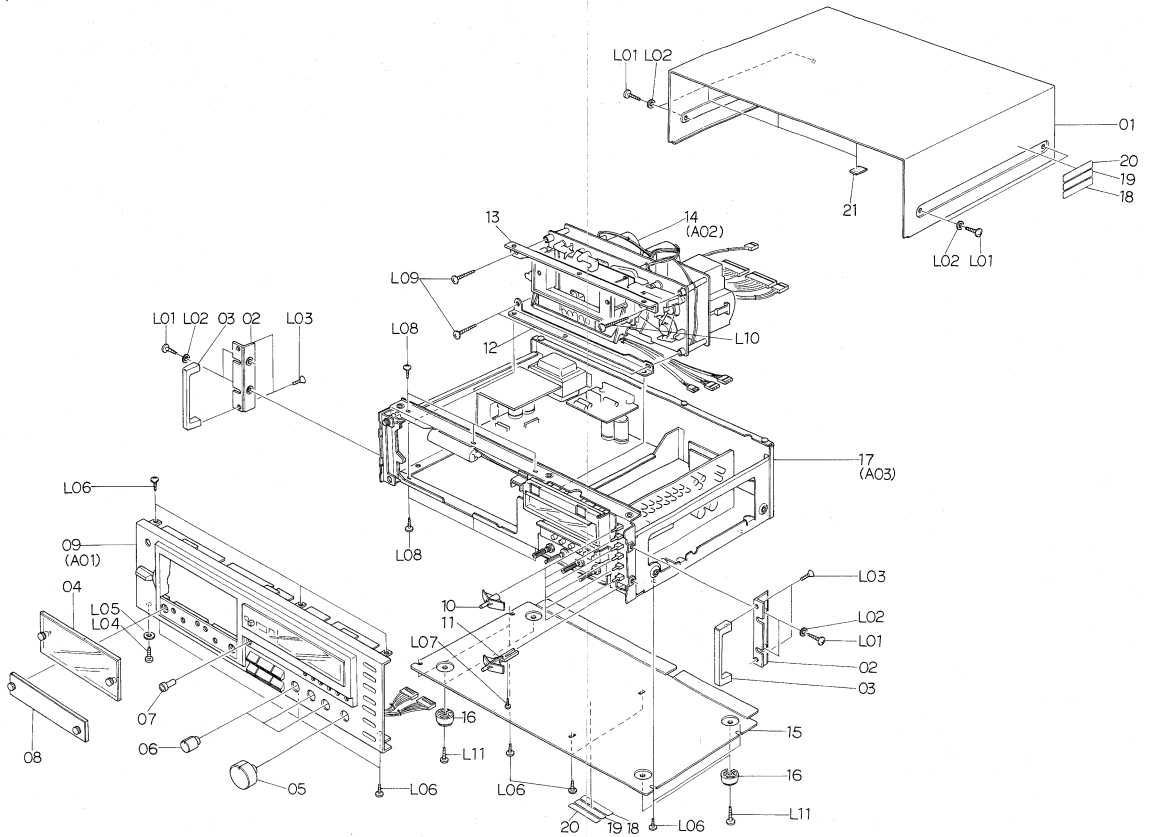

Fig. 8.1

Schematic Ref. No.	Part No.	Description	Q'ty	Schematic Ref. No.	Part No.	Description	Q'ty
		Synthesis Serial No.: A11505650 –				**Synthesis** Serial Nos.: A11505640 – A11505649	
01	0H03723D	Top Cover	1				
02	0H03788B	Side Panel B	2	01	0H03723D	Top Cover	1
03	0H03763B	Handle B	2	02	0H03788B	Side Panel B	2
04	HA03882A	Cassette Case Cover Ass'y	1	03	0H03763B	Handle B	2
05	0H03732B	Volume Knob A	1	04	HA03882A	Cassette Case Cover Ass'y	1
(05)	0H03733A	Volume Knob Sleeve A	1	05	0H03732B	Volume Knob A	1
06	0H03738B	Volume Knob B	3	(05)	0H03733A	Volume Knob Sleeve A	1
(06)	0H03739A	Volume Knob Sleeve B	3	06	0H03738B	Volume Knob B	3
07	0H03725A	Pitch Control Knob	1	(06)	0H03739A	Volume Knob Sleeve B	3
08	HA03981A	Azimuth Alignment Cover Ass'y	1	07	0H03725A	Pitch Control Knob	1
09	HA03959A	Front Panel Ass'y	1	08	HA03981A	Azimuth Alignment Cover Ass'y	1
10	HA03838B	Function Switch Knob Ass'y	6	09	HA03959A	Front Panel Ass'y	1
11	0H03741A	Power Switch Knob	1	10	HA03838B	Function Switch Knob Ass'y	6
12	0J04054B	Mechanism Holder B	1	11	0H03741A	Power Switch Knob	1
13	0J04053A	Mechanism Holder A	1	12	0J04054B	Mechanism Holder B	1
14	CA08229A	Mechanism Ass'y 670ZX	1	13	0J04053A	Mechanism Holder A	1
15	0H03757A	Bottom Cover	1	14	CA08151C	Mechanism Ass'y 670ZX	1
16	0J03825A	Leg S	4	15	0H03757A	Bottom Cover	1
17	JA03663A	Chassis Ass'y (U.S.A. & Canada)	1	16	0J03825A	Leg S	4
	JA03664A	Chassis Ass'y (Japan)	1	17	JA03663A	Chassis Ass'y (U.S.A. & Canada)	1
	JA03666A	Chassis Ass'y (220V Class 2)	1		JA03664A	Chassis Ass'y (Japan)	1
	JA03667A	Chassis Ass'y (Australia)	1		JA03666A	Chassis Ass'y (220V Class 2)	1
	JA03668A	Chassis Ass'y (UK)	1		JA03667A	Chassis Ass'y (Australia)	1
	JA03665A	Chassis Ass'y (Others)	1		JA03668A	Chassis Ass'y (UK)	1
18	0M03799A	Caution Label G	2		JA03665A	Chassis Ass'y (Others)	1
*19	0M03800A	Caution Label H (U.S.A. & Canada)	2	18	0M03799A	Caution Label G	2
*20	0M03883A	Lamp Caution Label (U.S.A. & Canada)	2	*19	0M03800A	Caution Label H (U.S.A. & Canada)	2
				*20	0M03883A	Lamp Caution Label (U.S.A. & Canada)	2
21	0J04080A	Top Cover Himelon	4				
L01	0E00915A	BT Screw M4x8 Philips Binding Head (Black Chromate)	8	21	0J04080A	Top Cover Himelon	4
				L01	0E00915A	BT Screw M4x8 Philips Binding Head (Black Chromate)	8
L02	0E00736A	Washer 4mm (Black Chromate)	8				
L03	0E00908A	Screw M4x6 Philips Countersunk	4	L02	0E00736A	Washer 4mm (Black Chromate)	8
L04	0E00921A	BT Screw M3x8 Philips Binding Head (Black Chromate)	1	L03	0E00908A	Screw M4x6 Philips Countersunk	4
				L04	0E00921A	BT Screw M3x8 Philips Binding Head (Black Chromate)	1
L05	0E00677A	Washer 3mm (Black Chromate)	1				
L06	0E00857A	BT Screw M3x6 Philips Binding Head	12	L05	0E00677A	Washer 3mm (Black Chromate)	1
				L06	0E00857A	BT Screw M3x6 Philips Binding Head	12
L07	0E00814A	ST Screw M2x4 Philips Pan Head	1				
L08	0E00920A	Screw M3x6 Philips Polywave	6	L07	0E00814A	ST Screw M2x4 Philips Pan Head	1
L09	0E00867A	BT Screw M4x15 Philips Binding Head	3	L08	0E00920A	Screw M3x6 Philips Polywave	6
				L09	0E00867A	BT Screw M4x15 Philips Binding Head	3
L10	0E00878A	BT Screw M4x20 Philips Binding Head	1				
				L10	0E00878A	BT Screw M4x20 Philips Binding Head	1
L11	0E00852A	BT Screw M4x12 Philips Binding Head	4				
				L11	0E00852A	BT Screw M4x12 Philips Binding Head	4
		*: Depends on the versions.				*: Depends on the versions.	

Schematic Ref. No.	Part No.	Description	Q'ty	Schematic Ref. No.	Part No.	Description	Q'ty
		Synthesis *Serial Nos.:* A11504731 — A11505639				**Synthesis** *Serial Nos.:* A11501001 — A11504730	
01	0H03723D	Top Cover	1	01	0H03723D	Top Cover	1
02	0H03788B	Side Panel B	2	02	0H03788B	Side Panel B	2
03	0H03763B	Handle B	2	03	0H03763B	Handle B	2
04	HA03882A	Cassette Case Cover Ass'y	1	04	HA03882A	Cassette Case Cover Ass'y	1
05	0H03732B	Volume Knob A	1	05	0H03732B	Volume Knob A	1
(05)	0H03733A	Volume Knob Sleeve A	1	(05)	0H03733A	Volume Knob Sleeve A	1
06	0H03738B	Volume Knob B	3	06	0H03738B	Volume Knob B	3
(06)	0H03739A	Volume Knob Sleeve B	3	(06)	0H03739A	Volume Knob Sleeve B	3
07	0H03725A	Pitch Control Knob	1	07	0H03725A	Pitch Control Knob	1
08	HA03981A	Azimuth Alignment Cover Ass'y	1	08	HA03981A	Azimuth Alignment Cover Ass'y	1
09	HA03959A	Front Panel Ass'y	1	09	HA03959A	Front Panel Ass'y	1
10	HA03838B	Function Switch Knob Ass'y	6	10	HA03838B	Function Switch Knob Ass'y	6
11	0H03741A	Power Switch Knob	1	11	0H03741A	Power Switch Knob	1
12	0J04054B	Mechanism Holder B	1	12	0J04054B	Mechanism Holder B	1
13	0J04053A	Mechanism Holder A	1	13	0J04053A	Mechanism Holder A	1
14	CA08151B	Mechanism Ass'y 670ZX	1	14	CA08151A	Mechanism Ass'y 670ZX	1
15	0H03757A	Bottom Cover	1	15	0H03757A	Bottom Cover	1
16	0J03825A	Leg S	4	16	0J03825A	Leg S	4
17	JA03663A	Chassis Ass'y (U.S.A. & Canada)	1	17	JA03663A	Chassis Ass'y (U.S.A. & Canada)	1
	JA03664A	Chassis Ass'y (Japan)	1		JA03664A	Chassis Ass'y (Japan)	1
	JA03666A	Chassis Ass'y (220V Class 2)	1		JA03666A	Chassis Ass'y (220V Class 2)	1
	JA03667A	Chassis Ass'y (Australia)	1		JA03667A	Chassis Ass'y (Australia)	1
	JA03668A	Chassis Ass'y (UK)	1		JA03668A	Chassis Ass'y (UK)	1
	JA03665A	Chassis Ass'y (Others)	1		JA03665A	Chassis Ass'y (Others)	1
18	0M03799A	Caution Label G	2	18	0M03799A	Caution Label G	2
* 19	0M03800A	Caution Label H (U.S.A. & Canada)	2	* 19	0M03800A	Caution Label H (U.S.A. & Canada)	2
* 20	0M03883A	Lamp Caution Label (U.S.A. & Canada)	2	* 20	0M03883A	Lamp Caution Label (U.S.A. & Canada)	2
21	0J04080A	Top Cover Himelon	4	21	0J04080A	Top Cover Himelon	4
L01	0E00915A	BT Screw M4x8 Philips Binding Head (Black Chromate)	8	L01	0E00915A	BT Screw M4x8 Philips Binding Head (Black Chromate)	8
L02	0E00736A	Washer 4mm (Black Chromate)	8	L02	0E00736A	Washer 4mm (Black Chromate)	8
L03	0E00908A	Screw M4x6 Philips Countersunk	4	L03	0E00908A	Screw M4x6 Philips Countersunk	4
L04	0E00921A	BT Screw M3x8 Philips Binding Head (Black Chromate)	1	L04	0E00921A	BT Screw M3x8 Philips Binding Head (Black Chromate)	1
L05	0E00677A	Washer 3mm (Black Chromate)	1	L05	0E00677A	Washer 3mm (Black Chromate)	1
L06	0E00857A	BT Screw M3x6 Philips Binding Head	12	L06	0E00857A	BT Screw M3x6 Philips Binding Head	12
L07	0E00814A	ST Screw M2x4 Philips Pan Head	1	L07	0E00814A	ST Screw M2x4 Philips Pan Head	1
L08	0E00920A	Screw M3x6 Philips Polywave	6	L08	0E00920A	Screw M3x6 Philips Polywave	6
L09	0E00867A	BT Screw M4x15 Philips Binding Head	3	L09	0E00867A	BT Screw M4x15 Philips Binding Head	3
L10	0E00878A	BT Screw M4x20 Philips Binding Head	1	L10	0E00878A	BT Screw M4x20 Philips Binding Head	1
L11	0E00852A	BT Screw M4x12 Philips Binding Head	4	L11	0E00852A	BT Screw M4x12 Philips Binding Head	4
		*: Depends on the versions.				*: Depends on the versions.	

8.2. Front Panel Ass'y (A01)

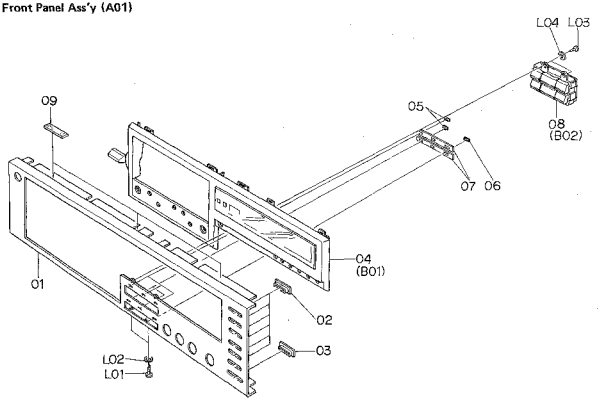

Fig. 8.2

Schematic Ref. No.	Part No.	Description	Q'ty
A01	**HA03959A**	**Front Panel Ass'y** Serial No.: A11501001 —	1
01	0H03823A	Front Panel	1
02	0H03746A	Function Switch Escutcheon	
03	0H03747C	Power Switch Escutcheon	1
04	HA03958B	Front Panel Escutcheon Ass'y	1
05	0H03744B	Green Lens	5
06	0H03745B	Orange Lens	1
07	0J04059B	Light Intercepting Seal A	2
08	HA03823A	Control Button Ass'y	1
09	0H03781A	Cushion	
L01	0E00825A	BT Screw M2.6x8 Philips Binding Head	2
L02	0E00912A	Washer FT25	2
L03	0E00794A	BT Screw M2x5 Philips Pan Head	2
L04	0E00117A	Washer 2mm	2

8.3. Mechanism Ass'y 670ZX (A02)

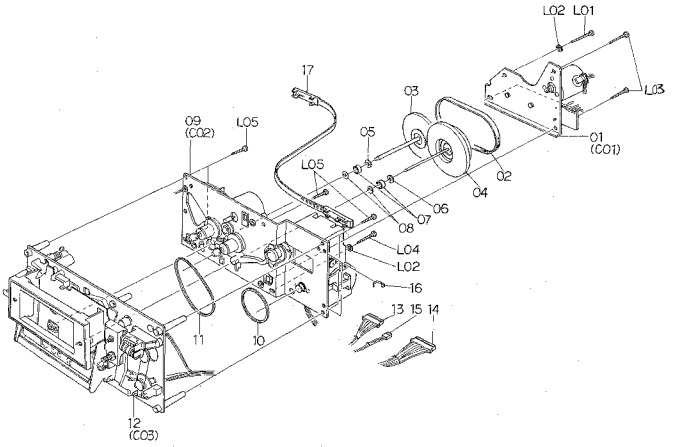

Fig. 8.3

Schematic Ref. No.	Part No.	Description	Q'ty
A02	CA08229A	**Mechanism Ass'y 670ZX** Serial No.: A11505650 –	1
01	CA08156A	Flywheel Holder Ass'y	1
02	0C08096C	Capstan Belt	1
03	CA08173A	Supply Flywheel Ass'y D	1
04	CA08015A	Take-up Flywheel Ass'y	1
05	0C08021B	Thrust Washer 3.1mm	1
06	0C08020B	Thrust Washer 2.6mm	1
07	0C08069C	Flange Thrust Cap	2
08	0C08022B	Flange Thrust Spring	2
09	CA08235A	Sub Mechanism Chassis Ass'y	1
10	0C08099B	Control Motor Belt	1
11	0C08098B	Counter Belt B	1
12	CA08221A	Main Mechanism Chassis Ass'y	1
13	0B08650B	9P-H Connector	1
14	0B08651D	11P-H Connector	1
15	0B08652C	3P-H Connector	1
16	0B08515A	Insh-Lock	15
17	0C08237A	Azimuth Alignment Wire	1
—	0M04158A	Mechanism Serial No. Seal	1
L01	0E00834A	BT Screw M3x30 Philips Pan Head	1
L02	0E00178A	Washer 3mm	2
L03	0E00833A	BT Screw M3x20 Philips Pan Head	3
L04	0E00835A	BT Screw M3x25 Philips Pan Head	1
L05	0E00883A	BT Screw M3x18 Philips Pan Head	5

Schematic Ref. No.	Part No.	Description	Q'ty
A02	CA08151B	**Mechanism Ass'y 670ZX** Serial Nos.: A11504731 – A11505639	1
01	CA08156A	Flywheel Holder Ass'y	1
02	0C08096C	Capstan Belt	1
03	CA08173A	Supply Flywheel Ass'y D	1
04	CA08015A	Take-up Flywheel Ass'y	1
05	0C08021B	Thrust Washer 3.1mm	1
06	0C08020B	Thrust Washer 2.6mm	1
07	0C08069C	Flange Thrust Cap	2
08	0C08022B	Flange Thrust Spring	2
09	CA08146A	Sub Mechanism Chassis Ass'y	1
10	0C08099B	Control Motor Belt	1
11	0C08098B	Counter Belt B	1
12	CA08180A	Main Mechanism Chassis Ass'y	1
13	0B08650B	9P-H Connector	1
14	0B08651D	11P-H Connector	1
15	0B08652C	3P-H Connector	1
16	0B08515A	Insh-Lock	15
17	0C08237A	Azimuth Alignment Wire	1
—	0M04158A	Mechanism Serial No. Seal	1
L01	0E00834A	BT Screw M3x30 Philips Pan Head	1
L02	0E00178A	Washer 3mm	2
L03	0E00833A	BT Screw M3x20 Philips Pan Head	3
L04	0E00835A	BT Screw M3x25 Philips Pan Head	1
L05	0E00883A	BT Screw M3x18 Philips Pan Head	5

Schematic Ref. No.	Part No.	Description	Q'ty
A02	CA08151C	**Mechanism Ass'y 670ZX** Serial Nos.: A11505640 – A11505649	1
01	CA08156A	Flywheel Holder Ass'y	1
02	0C08096C	Capstan Belt	1
03	CA08173A	Supply Flywheel Ass'y D	1
04	CA08015A	Take-up Flywheel Ass'y	1
05	0C08021B	Thrust Washer 3.1mm	1
06	0C08020B	Thrust Washer 2.6mm	1
07	0C08069C	Flange Thrust Cap	2
08	0C08022B	Flange Thrust Spring	2
09	CA08202A	Sub Mechanism Chassis Ass'y	1
10	0C08099B	Control Motor Belt	1
11	0C08098B	Counter Belt B	1
12	CA08209A	Main Mechanism Chassis Ass'y	1
13	0B08650B	9P-H Connector	1
14	0B08651D	11P-H Connector	1
15	0B08652C	3P-H Connector	1
16	0B08515A	Insh-Lock	15
17	0C08237A	Azimuth Alignment Wire	1
—	0M04158A	Mechanism Serial No. Seal	1
L01	0E00834A	BT Screw M3x30 Philips Pan Head	1
L02	0E00178A	Washer 3mm	2
L03	0E00833A	BT Screw M3x20 Philips Pan Head	3
L04	0E00835A	BT Screw M3x25 Philips Pan Head	1
L05	0E00883A	BT Screw M3x18 Philips Pan Head	5

Schematic Ref. No.	Part No.	Description	Q'ty
A02	CA08151A	**Mechanism Ass'y 670ZX** Serial Nos.: A11501001 – A11504730	1
01	CA08156A	Flywheel Holder Ass'y	1
02	0C08096C	Capstan Belt	1
03	CA08014A	Supply Flywheel Ass'y	1
04	CA08015A	Take-up Flywheel Ass'y	1
05	0C08021B	Thrust Washer 3.1mm	1
06	0C08020B	Thrust Washer 2.6mm	1
07	0C08069C	Flange Thrust Cap	2
08	0C08022B	Flange Thrust Spring	2
09	CA08146A	Sub Mechanism Chassis Ass'y	1
10	0C08099B	Control Motor Belt	1
11	0C08098B	Counter Belt B	1
12	CA08154A	Main Mechanism Chassis Ass'y	1
13	0B08650B	9P-H Connector	1
14	0B08651D	11P-H Connector	1
15	0B08652C	3P-H Connector	1
16	0B08515A	Insh-Lock	15
17	0C08237A	Azimuth Alignment Wire	1
—	0M04158A	Mechanism Serial No. Seal	1
L01	0E00834A	BT Screw M3x30 Philips Pan Head	1
L02	0E00178A	Washer 3mm	2
L03	0E00833A	BT Screw M3x20 Philips Pan Head	3
L04	0E00835A	BT Screw M3x25 Philips Pan Head	1
L05	0E00883A	BT Screw M3x18 Philips Pan Head	5

Schematic Ref. No.	Part No.	Description	Q'ty
A03	JA03663A	Chassis Ass'y (U.S.A. & Canada)	1
	JA03664A	Chassis Ass'y (Japan)	1
	JA03666A	Chassis Ass'y (220V Class 2)	1
	JA03667A	Chassis Ass'y (Australia)	1
	JA03668A	Chassis Ass'y (UK)	1
	JA03665A	Chassis Ass'y (Others)	1
		Serial No.: A11501001 –	
01	0B08716A	Level Meter	1
02	0H03829B	Meter Holder	1
03	JA03661A	Record Calibration Ass'y	1
04	JA03658A	Volume Holder Ass'y	1
05	JA03659A	Headphone Jack Ass'y	1
06	JA03600A	Reflector Ass'y	1
07	JA03602A	Counter Lamp Ass'y	1
08	0J04034F	Front Chassis	1
09	BA04183A	Switch P.C.B. Ass'y	1
10	BA04184A	Main P.C.B. Ass'y	1
11	BA04185A	Logic P.C.B. Ass'y	1
12	BA04207A	Auto Azimuth P.C.B. Ass'y	1
13	0J04033C	Side Chassis Right	1
14	JA03592A	Power Switch Holder Ass'y (U.S.A., Canada & Others)	1
	JA03595A	Power Switch Holder Ass'y (Japan)	1
	JA03594A	Power Switch Holder Ass'y (220V Class 2, Australia & UK)	1
15	0J04055B	Switch P.C.B. Holder	1
16	0J04032D	Center Chassis	1
17	0J04031B	Side Chassis Left	1
18	HA03952A	Rear Panel Ass'y (U.S.A. & Canada)	1
	HA03953A	Rear Panel Ass'y (Japan)	1
	HA03955A	Rear Panel Ass'y (220V Class 2)	1
	HA03956A	Rear Panel Ass'y (Australia)	1
	HA03957A	Rear Panel Ass'y (UK)	1
	HA03954A	Rear Panel Ass'y (Others)	1
19	0J04062B	Insulator	2
20	0B08515A	Insu-Lock	23
21	0J04064A	Free Bushing 85mm	1
* 22	0M03700A	Earth Mark Label	1
23	0B08580A	Wire Holder 161	1
L01	0E00857A	BT Screw M3x8 Philips Binding Head	36
L02	0E00868A	BT Screw M3x8 Philips Binding Head	6
L03	0E00859A	BT Screw M2.6x6 Philips Binding Head	3
L04	0E00622A	Screw M3x5 Philips Pan Head (2A)	6
L05	0E00860A	BT Screw M3x6 Philips Binding Head (Black Chromate)	6
* L06	0E00521A	Screw M3x8 Philips Pan Head	1
* L07	0E00507A	Nut Hex. M3	1
* L08	0E00581A	Washer 3mm (Spring)	1
* L09	0E00037A	Earth Lug B-5	1
		*: Depends on the versions.	

Schematic Ref. No.	Part No.	Description	Q'ty
B01	HA03958B	Front Panel Escutcheon Ass'y	1
		Serial No.: A11501001 –	
01	HA03983C	Front Panel Escutcheon Sub Ass'y	1
02	0H03722B	Display Glass	1
03	0H03826B	Display Glass Hold Plate	1
04	BA04209A	RAMM P.C.B. Ass'y	1
05	0H03830A	LED Filter	1
06	0J04050A	Counter Escutcheon Holder	1
07	0H03749A	Memory Switch Knob	1
08	0J04043A	Memory Switch Knob Spring	1
09	0H03743B	Counter Reset Knob Holder	1
10	0H03750A	Counter Reset Knob	1
11	0J04042A	Counter Reset Knob Spring	1
12	0H03724F	Eject Lever	1
13	0H03762A	Eject Lever Spring	1
14	0J04057B	Eject Lever Cushion	1
L01	0E00874A	Stopper Ring CS 2mm	5
L02	0E00854A	BT Screw M2.6x6 Philips Pan Head	4
L03	0E00890A	C-Ring 2mm	1
L04	0E00837A	Stopper Ring 3mm	1
B02	HA03823A	Control Button Ass'y	1
		Serial No.: A11501001 –	
01	0H03726B	Control Button Stop	1
02	0H03727B	Control Button Play	1
03	0H03726B	Control Button F.F.	1
04	0H03729B	Control Button Rewind	1
05	0H03730B	Control Button Pause	1
06	0H03731B	Control Button Record	1
07	0J04044C	Control Button Holder	1
08	0J04045B	Control Button Shaft	2
09	0J04046A	Control Button Spring	6
10	0J04052B	Spring Stopper	6
11	0J04099A	Control Button Himelon	2
12	BA04071A	Control Switch P.C.B. Ass'y	1
L01	0E00792A	BT Screw M2.6x6 Philips Pan Head	6
L02	0J04061A	Washer FT20	8
C01	CA08156A	Flywheel Holder Ass'y	1
		Serial No.: A11501001 –	
01	0C08013I	Flywheel Holder	1
02	0C08238A	Capstan Motor	1
03	0C08079G	Capstan Motor Pulley	1
04	–	Speed Cal. P.C.B. Ass'y (Incorporated in the Capstan Motor)	(1)
L01	0E00226A	Screw M2.6x4 Philips Pan Head	3
L02	0C08068C	Thrust Screw	2
L03	0C03857A	Lock Nut	2
L04	0E00862A	BT Screw M3x6 Philips Pan Head	1

8.4. Chassis Ass'y (A03)

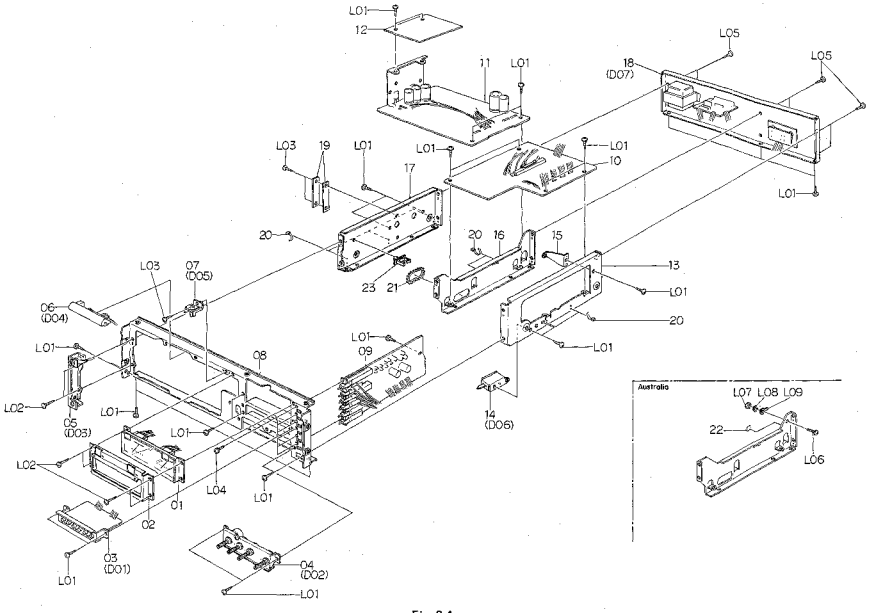

Fig. 8.4

8.5. Front Panel Escutcheon Ass'y (B01)

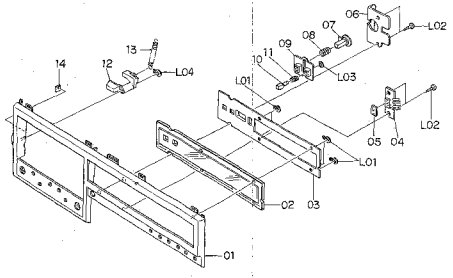

Fig. 8.5

8.6. Control Button Ass'y (B02)

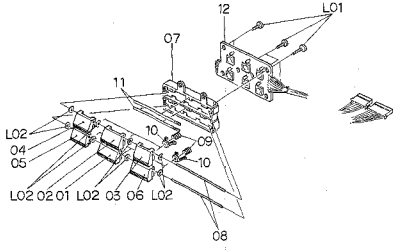

Fig. 8.6

8.7. Flywheel Holder Ass'y (C01)

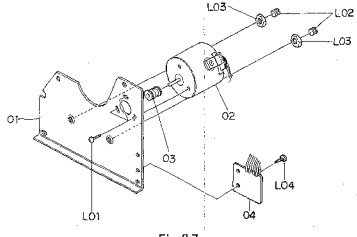

Fig. 8.7

8.8. Sub Mechanism Chassis Ass'y (C02)

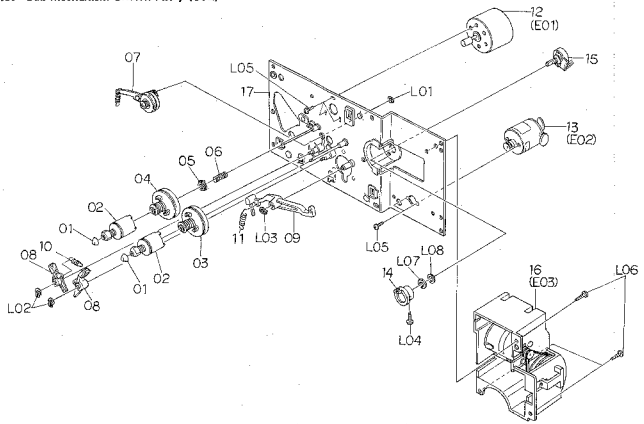

Fig. 8.8.1 Serial No.: A11505650 –

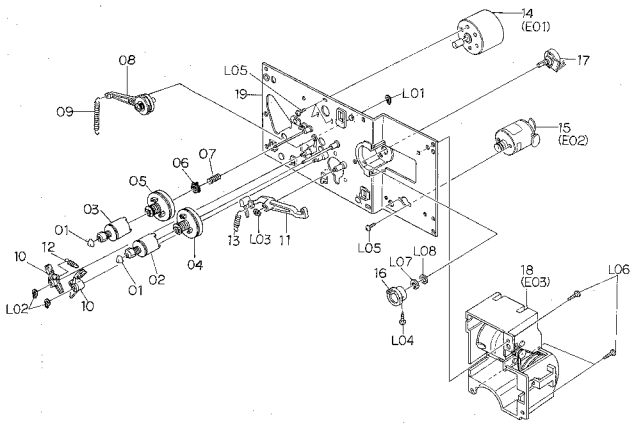

Fig. 8.8.2 Serial Nos.: A11505640 – A11505649

Schematic Ref. No.	Part No.	Description	Q'ty	Schematic Ref. No.	Part No.	Description	Q'ty
C02	**CA08235A**	**Sub Mechanism Chassis Ass'y** Serial No.: A11505650 –	**1**	L05	0E00226A	Screw M2.6x4 Philips Pan Head	5
				L06	0E00846A	BT Screw M3x8 Philips Pan Head	3
01	0C08039B	Reel Hub Head	2	L07	–	Volume Nut	(1)
02	CA08038C	Reel Hub B Ass'y	2	L08	–	Volume Washer	(1)
03	CA08037A	Reel Hub Take-up Ass'y	1				
04	CA08064A	Reel Hub Supply Ass'y	1				
05	CA08039A	Back Tension Ass'y	1				
06	0C08178A	Back Tension Spring	1				
07	CA08193A	Idler Ass'y	1				
08	CA08042A	Brake Ass'y	2				
09	0C08030C	Brake Drive Arm	1				
10	0C08129A	Brake Arm Spring	1				
11	0C08128A	Brake Drive Arm Spring	1				
12	CA08117B	Reel Motor Ass'y	1				
13	CA08034A	Control Motor Ass'y	1				
14	0C08053B	Volume Coupler	1				
15	0B07240A	Volume Control 10kΩ (B)	1				
16	CA08148A	Azimuth Alignment Motor Ass'y	1				
17	CA08041A	Sub Chassis Ass'y	1				
L01	0E00698A	E-Ring 2.5mm	1				
L02	0E00837A	Stopper Ring 3mm	2				
L03	0E00838A	Stopper Ring 4mm	1				
L04	0E00859A	BT Screw M2.6x6 Philips Binding Head	1				

Schematic Ref. No.	Part No.	Description	Q'ty	Schematic Ref. No.	Part No.	Description	Q'ty
C02	**CA08202A**	**Sub Mechanism Chassis Ass'y** Serial Nos.: A11505640 – A11505649	**1**	L04	0E00859A	BT Screw M2.6x6 Philips Binding Head	1
				L05	0E00226A	Screw M2.6x4 Philips Pan Head	5
01	0C08039B	Reel Hub Head	2	L06	0E00846A	BT Screw M3x8 Philips Pan Head	3
02	CA08038B	Reel Hub B Ass'y	1				
03	CA08197A	Reel Hub B Ass'y	1	L07	–	Volume Nut	(1)
04	CA08037A	Reel Hub Take-up Ass'y	1	L08	–	Volume Washer	(1)
05	CA08064A	Reel Hub Supply Ass'y	1				
06	CA08039A	Back Tension Ass'y	1				
07	0C08178A	Back Tension Spring	1				
08	CA08040A	Idler Ass'y	1				
09	0C08127B	Idler Arm Spring	1				
10	CA08042A	Brake Ass'y	2				
11	0C08030C	Brake Drive Arm	1				
12	0C08129A	Brake Arm Spring	1				
13	0C08128A	Brake Drive Arm Spring	1				
14	CA08117B	Reel Motor Ass'y	1				
15	CA08034A	Control Motor Ass'y	1				
16	0C08053B	Volume Coupler	1				
17	0B07240A	Volume Control 10kΩ (B)	1				
18	CA08148A	Azimuth Alignment Motor Ass'y	1				
19	CA08041A	Sub Chassis Ass'y	1				
L01	0E00842A	Stopper Ring 2mm	1				
L02	0E00837A	Stopper Ring 3mm	2				
L03	0E00838A	Stopper Ring 4mm	1				

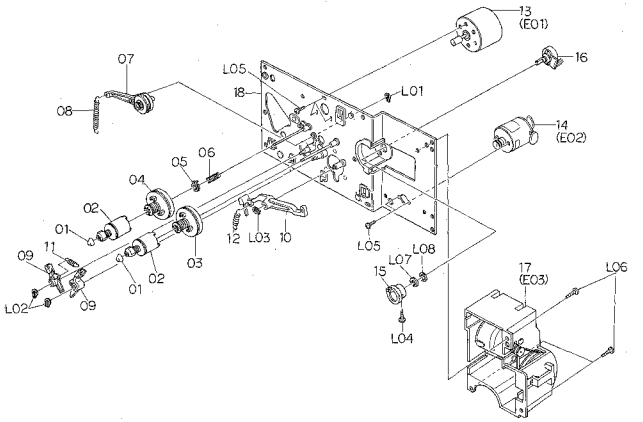

Fig. 8.8.3 Serial Nos.: A11501001 – A11505639

Schematic Ref. No.	Part No.	Description	Q'ty	Schematic Ref. No.	Part No.	Description	Q'ty
C02	CA08146A	Sub Mechanism Chassis Ass'y Serial Nos.: A11501001 – A11505639	1	L04	0E00859A	BT Screw M2.6x6 Philips Binding Head	1
				L05	0E00226A	Screw M2.6x4 Philips Pan Head	5
				L06	0E00846A	BT Screw M3x8 Philips Pan Head	3
01	0C08039B	Reel Hub Head	2	L07	–	Volume Nut	(1)
02	CA08038B	Reel Hub B Ass'y	2	L08	–	Volume Washer	(1)
03	CA08037A	Reel Hub Take-up Ass'y	1				
04	CA08064A	Reel Hub Supply Ass'y	1				
05	CA08039A	Back Tension Ass'y	1				
06	0C08178A	Back Tension Spring	1				
07	CA08040A	Idler Ass'y	1				
08	0C08127B	Idler Arm Spring	1				
09	CA08042A	Brake Ass'y	2				
10	0C08030C	Brake Drive Arm	1				
11	0C08129A	Brake Arm Spring	1				
12	0C08128A	Brake Drive Arm Spring	1				
13	CA08117B	Reel Motor Ass'y	1				
14	CA08034A	Control Motor Ass'y	1				
15	0C08053B	Volume Coupler	1				
16	0807240A	Volume Control 10kΩ (B)	1				
17	CA08148A	Azimuth Alignment Motor Ass'y	1				
18	CA08041A	Sub Chassis Ass'y	1				
L01	0E00842A	Stopper Ring 2mm	1				
L02	0E00837A	Stopper Ring 3mm	2				
L03	0E00838A	Stopper Ring 4mm	1				

Schematic Ref. No.	Part No.	Description	Q'ty
C03	CA08209A	Main Mechanism Chassis Ass'y Serial No.: A11505640 –	1
01	CA08125A	Cassette Case Holder L Ass'y	1
02	0C08151A	Lid Arm Spring Tube	1
03	CA08022A	Cassette Case Holder R Ass'y	1
04	CA08163A	Cassette Case Ass'y	1
05	0C08019I	Cover Plate	1
06	0M03977A	Cassette Viewer Label	1
07	CA08147A	Head Mount Base Ass'y	1
08	0C08121A	Supply Pressure Roller Spring	1
09	CA08053B	Supply Pressure Roller Ass'y	1
10	0C08122B	Supply Pressure Roller Thrust Spring	1
11	CA08079B	Take-up Pressure Roller Ass'y	1
12	0C08183B	Take-up Pressure Roller Thrust Spring	1
13	CA08104A	Head Base Ass'y D	1
14	0C08182A	Pressure Roller Drive Bar B	1
15	0C08086B	Head Base Roller	3
16	0C08050B	Record Sensor	1
17	0C08051E	Cassette Hold Arm	1
18	0C08120A	Cassette Hold Arm Spring	1
19	CA08027A	Head Base Drive Arm Ass'y	1
20	0C08143C	Head Base Drive Arm Spring	1
21	CA08026A	Pressure Roller Drive Arm Ass'y	1
22	CA08099A	Auto Shut-off Ass'y	1
23	CA08098A	Counter Ass'y	1
24	CA08105A	Pitch Control Holder Ass'y	1
25	0C08224A	Counter Belt	1
26	0C08119A	Record Protector	1
27	0C08194C	Damper Lock Arm	1
28	0C08153A	Damper Lock Arm Spring Tube	1
29	0C08125A	Damper Lock Arm Spring	1
30	CA08030A	Pneumatic Damper Ass'y	1
31	CA08023A	Supply Capstan Flange Ass'y	1
32	CA08024A	Take-up Capstan Flange Ass'y	1
33	0C08186A	Cam Drive Gear	1
34	0C08029H	Control Cam	1
35	0C08152A	Counter-Load Arm Spring	1
36	0C08117A	Counter-Load Arm Spring Tube	1
37	CA08028A	Counter-Load Arm Ass'y	1
38	CA08072A	Main Chassis Ass'y	1
39	0C08250A	Supply Pressure Roller Spring B	1
40	CA08196A	Back Tension Ass'y	1
41	0C08254A	Back Tension Arm Collar	1
L01	0E00837A	Stopper Ring 3mm	7
L02	0E00832A	BT Screw M3x14 Philips Pan Head	2
L03	0E00834A	BT Screw M3x30 Philips Pan Head	2
L04	0E00831A	BT Screw M3x10 Philips Pan Head	3
L05	0E00254A	Washer 3.1mm (Plastics)	2
L06	0E00222A	E-Ring 2mm	2
L07	0E00876A	BT Screw M2.6x8 Philips Pan Head	11
L08	0C08060B	Height Adjustment Nut	2
L09	0E00142A	Washer 2.6mm	2
L10	0E00879A	BT Screw M2x15 Philips Pan Head	1
L11	0E00838A	Stopper Ring 4mm	3
L12	0E00846A	BT Screw M3x8 Phillips Pan Head	3
L13	0E00865A	BT Screw M3x10 Philips Binding Head	2
L14	0E00895A	Earth Lug 3mm	2
L15	0E00859A	BT Screw M2.6x6 Philips Binding Head	1
L16	0C08255A	Washer 2.6mm	1

8.9. Main Mechanism Chassis Ass'y (C03)

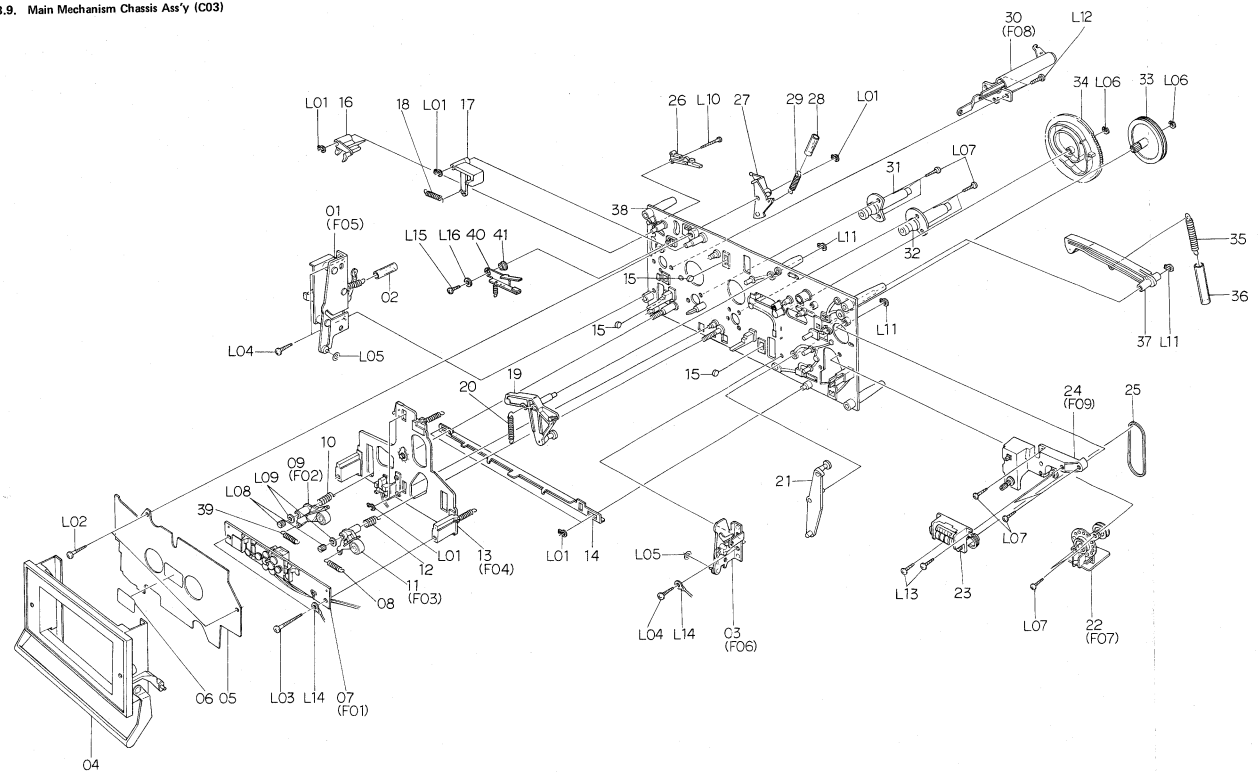

Fig. 8.9.1 Serial No.: A11505640 –

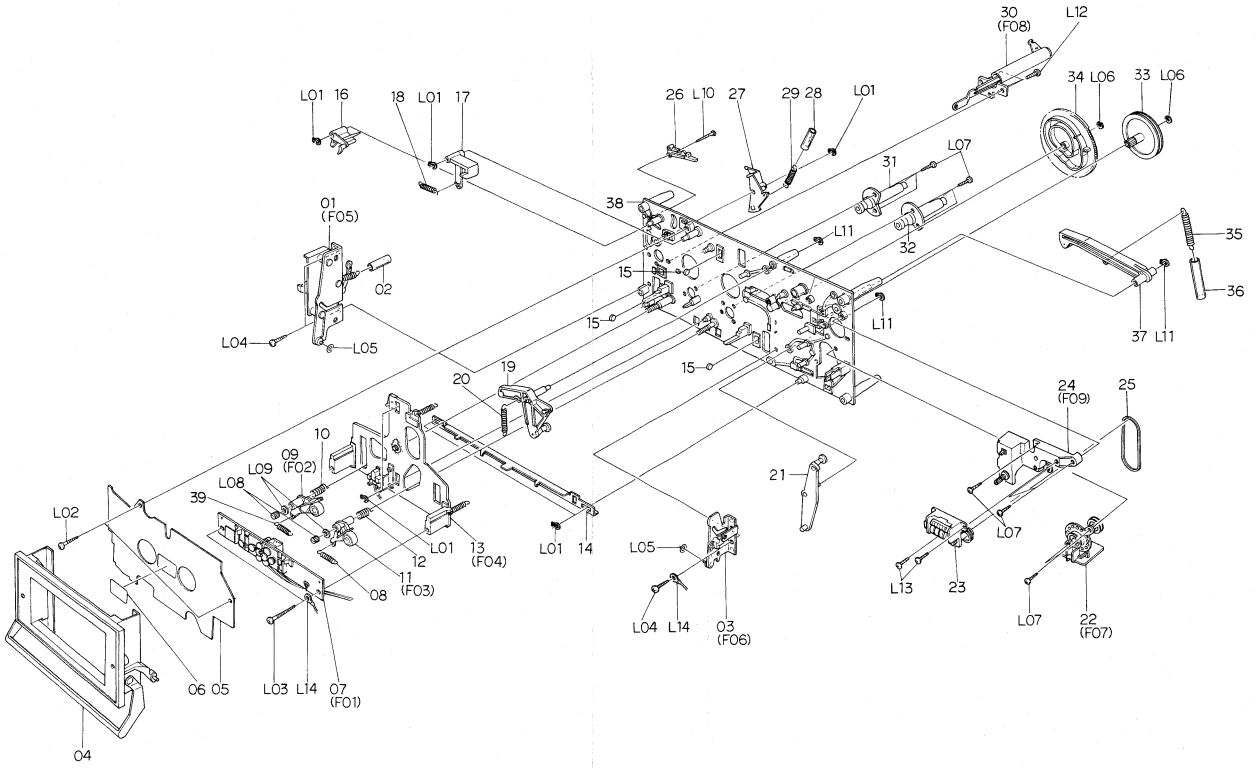

Fig. 8.9.2 Serial Nos.: A11504731 – A11505639

Schematic Ref. No.	Part No.	Description	Q'ty
C03	**CA08180A**	**Main Mechanism Chassis Ass'y** Serial Nos.: A11504731 – A11505639	**1**
01	CA08125A	Cassette Case Holder L Ass'y	1
02	0C08151A	Lid Arm Spring Tube	1
03	CA08022A	Cassette Case Holder R Ass'y	1
04	CA08163A	Cassette Case Ass'y	1
05	0C08019I	Cover Plate	1
06	0M03977A	Cassette Viewer Label	1
07	CA08147A	Head Mount Base Ass'y	1
08	0C08121A	Supply Pressure Roller Spring	1
09	CA08053B	Supply Pressure Roller Ass'y	1
10	0C08122B	Supply Pressure Roller Thrust Spring	1
11	CA08079B	Take-up Pressure Roller Ass'y	1
12	0C08183B	Take-up Pressure Roller Thrust Spring	1
13	CA08104A	Head Base Ass'y D	1
14	0C08182A	Pressure Roller Drive Bar B	1
15	0C08086B	Head Base Roller	3
16	0C08050B	Record Sensor	1
17	0C08051E	Cassette Hold Arm	1
18	0C08120A	Cassette Hold Arm Spring	1
19	CA08027A	Head Base Drive Arm Ass'y	1
20	0C08143C	Head Base Drive Arm Spring	1
21	CA08026A	Pressure Roller Drive Arm Ass'y	1
22	CA08099A	Auto Shut-off Ass'y	1
23	CA08098A	Counter Ass'y	1
24	CA08105A	Pitch Control Holder Ass'y	1
25	0C08224A	Counter Belt	1
26	0C08119A	Record Protector	1
27	0C08194C	Damper Lock Arm	1
28	0C08153A	Damper Lock Arm Spring Tube	1
29	0C08125A	Damper Lock Arm Spring	1
30	CA08030A	Pneumatic Damper Ass'y	1
31	CA08023A	Supply Capstan Flange Ass'y	1
32	CA08024A	Take-up Capstan Flange Ass'y	1
33	0C08186A	Cam Drive Gear	1
34	0C08029H	Control Cam	1
35	0C08152A	Counter-Load Arm Spring	1
36	0C08117A	Counter-Load Arm Spring Tube	1
37	CA08028A	Counter-Load Arm Ass'y	1
38	CA08072A	Main Chassis Ass'y	1
39	0C08250A	Supply Pressure Roller Spring B	
L01	0E00837A	Stopper Ring 3mm	7
L02	0E00832A	BT Screw M3x14 Philips Pan Head	2
L03	0E00834A	BT Screw M3x30 Philips Pan Head	2
L04	0E00831A	BT Screw M3x10 Philips Pan Head	3
L05	0E00254A	Washer 3.1mm (Plastics)	2
L06	0E00222A	E-Ring 2mm	2
L07	0E00876A	BT Screw M2.6x8 Philips Pan Head	11
L08	0C08060B	Height Adjustment Nut	2
L09	0E00142A	Washer 2.6mm	2
L10	0E00879A	BT Screw M2x15 Philips Pan Head	1
L11	0E00838A	Stopper Ring 4mm	3
L12	0E00846A	BT Screw M3x8 Philips Pan Head	3
L13	0E00865A	BT Screw M3x10 Philips Binding Head	2
L14	0E00895A	Earth Lug 3mm	2

Schematic Ref. No.	Part No.	Description	Q'ty
C03	**CA08154A**	**Main Mechanism Chassis Ass'y** Serial Nos.: A11503891 – A11504730	
01	CA08125A	Cassette Case Holder L Ass'y	1
02	0C08151A	Lid Arm Spring Tube	1
03	CA08022A	Cassette Case Holder R Ass'y	1
04	CA08163A	Cassette Case Ass'y	1
05	0C08019I	Cover Plate	1
06	0M03977A	Cassette Viewer Label	1
07	CA08147A	Head Mount Base Ass'y	1
08	0C08121A	Supply Pressure Roller Spring	2
09	CA08053B	Supply Pressure Roller Ass'y	1
10	0C08122B	Supply Pressure Roller Thrust Spring	1
11	CA08079B	Take-up Pressure Roller Ass'y	1
12	0C08183B	Take-up Pressure Roller Thrust Spring	1
13	CA08104A	Head Base Ass'y D	1
14	0C08182A	Pressure Roller Drive Bar B	1
15	0C08086B	Head Base Roller	3
16	0C08050B	Record Sensor	1
17	0C08051E	Cassette Hold Arm	1
18	0C08120A	Cassette Hold Arm Spring	1
19	CA08027A	Head Base Drive Arm Ass'y	1
20	0C08143C	Head Base Drive Arm Spring	1
21	CA08026A	Pressure Roller Drive Arm Ass'y	1
22	CA08099A	Auto Shut-off Ass'y	1
23	CA08098A	Counter Ass'y	1
24	CA08105A	Pitch Control Holder Ass'y	1
25	0C08224A	Counter Belt	1
26	0C08119A	Record Protector	1
27	0C08194C	Damper Lock Arm	1
28	0C08153A	Damper Lock Arm Spring Tube	1
29	0C08125A	Damper Lock Arm Spring	1
30	CA08030A	Pneumatic Damper Ass'y	1
31	CA08023A	Supply Capstan Flange Ass'y	1
32	CA08024A	Take-up Capstan Flange Ass'y	1
33	0C08186A	Cam Drive Gear	1
34	0C08029H	Control Cam	1
35	0C08152A	Counter-Load Arm Spring	1
36	0C08117A	Counter-Load Arm Spring Tube	1
37	CA08028A	Counter-Load Arm Ass'y	1
38	CA08072A	Main Chassis Ass'y	1
L01	0E00837A	Stopper Ring 3mm	7
L02	0E00832A	BT Screw M3x14 Philips Pan Head	2
L03	0E00834A	BT Screw M3x30 Philips Pan Head	2
L04	0E00831A	BT Screw M3x10 Philips Pan Head	3
L05	0E00254A	Washer 3.1mm (Plastics)	2
L06	0E00222A	E-Ring 2mm	2
L07	0E00876A	BT Screw M2.6x8 Philips Pan Head	11
L08	0C08060B	Height Adjustment Nut	2
L09	0E00142A	Washer 2.6mm	2
L10	0E00879A	BT Screw M2x15 Philips Pan Head	1
L11	0E00838A	Stopper Ring 4mm	3
L12	0E00846A	BT Screw M3x8 Philips Pan Head	3
L13	0E00865A	BT Screw M3x10 Philips Binding Head	2
L14	0E00895A	Earth Lug 3mm	2

Schematic Ref. No.	Part No.	Description	Q'ty
C03	**CA08154A**	**Main Mechanism Chassis Ass'y** Serial Nos.: A11501001 – A11503890	1
01	CA08125A	Cassette Case Holder L Ass'y	1
02	0C08151A	Lid Arm Spring Tube	1
03	CA08022A	Cassette Case Holder R Ass'y	1
04	CA08163A	Cassette Case Ass'y	1
05	0C08019I	Cover Plate	1
06	0M03977A	Cassette Viewer Label	1
07	CA08147A	Head Mount Base Ass'y	1
08	0C08121A	Supply Pressure Roller Spring	2
09	CA08053B	Supply Pressure Roller Ass'y	1
10	0C08122B	Supply Pressure Roller Thrust Spring	1
11	CA08079A	Take-up Pressure Roller Ass'y	1
12	0C08183B	Take-up Pressure Roller Thrust Spring	1
13	CA08104A	Head Base Ass'y D	1
14	0C08182A	Pressure Roller Drive Bar B	1
15	0C08086B	Head Base Roller	3
16	0C08050B	Record Sensor	1
17	0C08051E	Cassette Hold Arm	1
18	0C08120A	Cassette Hold Arm Spring	1
19	CA08027A	Head Base Drive Arm Ass'y	1
20	0C08143C	Head Base Drive Arm Spring	1
21	CA08026A	Pressure Roller Drive Arm Ass'y	1
22	CA08099A	Auto Shut-off Ass'y	1
23	CA08098A	Counter Ass'y	1
24	CA08105A	Pitch Control Holder Ass'y	1
25	0C08224A	Counter Belt	1
26	0C08119A	Record Protector	1
27	0C08194C	Damper Lock Arm	1
28	0C08153A	Damper Lock Arm Spring Tube	1
29	0C08125A	Damper Lock Arm Spring	1
30	CA08030A	Pneumatic Damper Ass'y	1
31	CA08023A	Supply Capstan Flange Ass'y	1
32	CA08024A	Take-up Capstan Flange Ass'y	1
33	0C08186A	Cam Drive Gear	1
34	0C08029H	Control Cam	1
35	0C08152A	Counter-Load Arm Spring	1
36	0C08117A	Counter-Load Arm Spring Tube	1
37	CA08028A	Counter-Load Arm Ass'y	1
38	CA08072A	Main Chassis Ass'y	1
L01	0E00837A	Stopper Ring 3mm	7
L02	0E00832A	BT Screw M3x14 Philips Pan Head	2
L03	0E00834A	BT Screw M3x30 Philips Pan Head	2
L04	0E00831A	BT Screw M3x10 Philips Pan Head	3
L05	0E00254A	Washer 3.1mm (Plastics)	2
L06	0E00222A	E-Ring 2mm	2
L07	0E00876A	BT Screw M2.6x8 Philips Pan Head	11
L08	0C08060B	Height Adjustment Nut	2
L09	0E00142A	Washer 2.6mm	2
L10	0E00879A	BT Screw M2x15 Philips Pan Head	1
L11	0E00838A	Stopper Ring 4mm	3
L12	0E00846A	BT Screw M3x8 Philips Pan Head	3
L13	0E00865A	BT Screw M3x10 Philips Binding Head	2
L14	0E00895A	Earth Lug 3mm	2

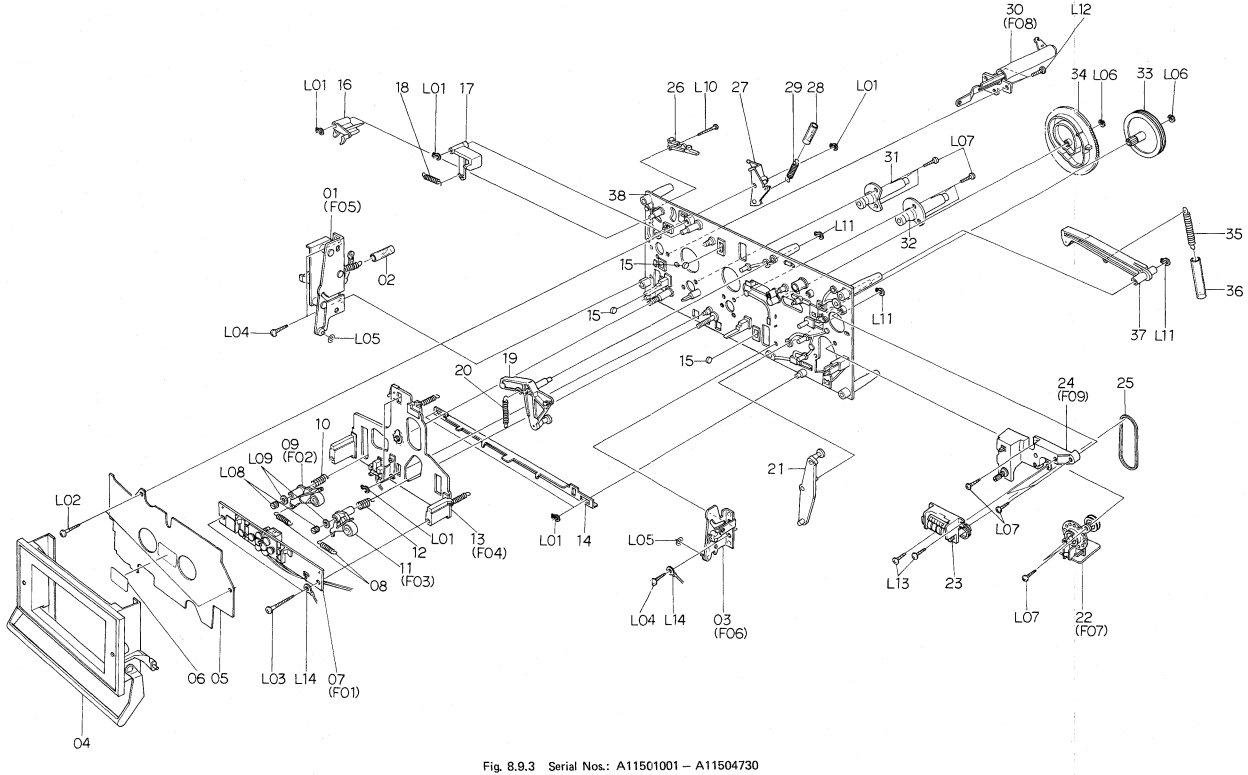

Fig. 8.9.3 Serial Nos.: A11501001 – A11504730

8.10. Record Calibration Ass'y (D01)

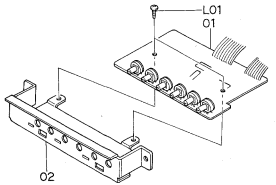

Fig. 8.10

8.11. Volume Holder Ass'y (D02)

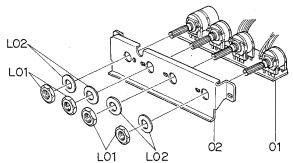

Fig. 8.11

8.12. Headphone Jack Ass'y (D03)

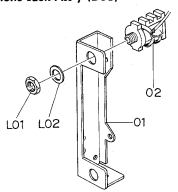

Fig. 8.12

8.13. Reflector Ass'y (D04)

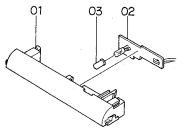

Fig. 8.13

8.14. Counter Lamp Ass'y (D05)

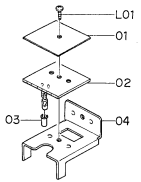

Fig. 8.14

8.15. Power Switch Holder Ass'y (D06)

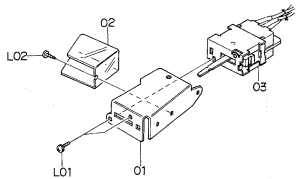

Fig. 8.15

Schematic Ref. No.	Part No.	Description	Q'ty
D01	**JA03661A**	**Record Calibration Ass'y** Serial No.: A11501001 —	**1**
01	BA04188A	Record Cal. P.C.B. Ass'y	1
02	0J04102B	Cal. P.C.B. Holder	1
L01	0E00856A	BT Screw M3x5 Philips Binding Head	2
D02	**JA03658A**	**Volume Holder Ass'y** Serial No.: A11501001 —	**1**
01	BA04175A	Volume P.C.B. Ass'y	1
02	0J04100A	Volume Holder	1
L01	—	Volume Nut	(4)
L02	—	Volume Washer	(4)
D03	**JA03659A**	**Headphone Jack Ass'y** Serial No.: A11501001 —	**1**
01	0J04101A	Headphone Jack Holder	1
02	0B08511A	Headphone Jack	1
L01	—	Headphone Jack Nut	(1)
L02	—	Headphone Jack Washer	(1)
D04	**JA03600A**	**Reflector Ass'y** Serial No.: A11501001 —	**1**
01	0H03754C	Reflector	1
02	BA04063A	Lamp P.C.B. C Ass'y	1
03	0J04107A	Filter Cap	1
D05	**JA03602A**	**Counter Lamp Ass'y** Serial No.: A11501001 —	**1**
01	0J04083A	Insulator	1
02	BA04062A	Lamp P.C.B. B Ass'y	1
03	0J04107A	Filter Cap	1
04	0J04041A	Counter Lamp P.C.B. Holder	1
L01	0E00859A	BT Screw M2.6x6 Philips Binding Head	1
D06	**JA03592A**	**Power Switch Holder Ass'y (U.S.A. & Canada)**	**1**
	JA03595A	**Power Switch Holder Ass'y (Japan)**	**1**
	JA03594A	**Power Switch Holder Ass'y (220V Class 2, UK, Australia & Others)** Serial No.: A11501001 —	**1**
01	0J04038A	Power Switch Holder	1
02	0J04056A	Power Switch Insulator	1
03	0B07280A	Power Switch (U.S.A. & Canada)	1
	0B07291A	Power Switch (Japan)	1
	0B07292A	Power Switch (220V Class 2, UK, Australia & Others)	1
L01	0E00622A	Screw M3x5 Philips Pan Head (2A)	2
L02	0E00873A	BT Screw M2.6x5 Philips Binding Head	1
D07	**HA03952A**	**Rear Panel Ass'y (U.S.A. & Canada)**	**1**
	HA03953A	**Rear Panel Ass'y (Japan)**	**1**
	HA03955A	**Rear Panel Ass'y (220V Class 2)**	**1**
	HA03956A	**Rear Panel Ass'y (Australia)**	**1**
	HA03957A	**Rear Panel Ass'y (UK)**	**1**
	HA03954A	**Rear Panel Ass'y (Others)** Serial No.: A11501001 —	**1**
01	0H03818A	Rear Panel	1
02	BA04176A	Pin Jack P.C.B. Ass'y	1
03	0B08355A	4P DIN Socket	1
04	0B08584A	8P DIN Socket	1
05	BA04202A	Fuse P.C.B. Ass'y (U.S.A. & Canada)	1
	BA04203A	Fuse P.C.B. Ass'y (Japan)	1
	BA04204A	Fuse P.C.B. Ass'y (220V Class 2)	1
	BA04205A	Fuse P.C.B. Ass'y (UK & Australia)	1
	BA04206A	Fuse P.C.B. Ass'y (Others)	1
06	0C01162B	Bolt Receptacle Plate	2
07	0B06609B	Power Transformer (U.S.A. & Canada)	1
	0B06610A	Power Transformer (Japan)	1
	0B06612A	Power Transformer (220V Class 2, UK & Australia)	1
	0B06611B	Power Transformer (Others)	1
08	0J04016A	Transformer Plate	1
09	0B08037U	Cord Bushing C (U.S.A., Canada, Japan, 220V Class 2 & Others)	1
	0B08719A	Cord Bushing (Australia)	1
	0B08351A	Cord Bushing 4K-4 (UK)	1
10	0B08533A	Power Cord (U.S.A., Canada & Others)	1
	0B08219B	Power Cord (Japan)	1
	0B08093A	Power Cord (220V Class 2)	1
	0B08666A	Power Cord (Australia)	1
	0B08348A	Power Cord (UK)	1
11	0A03154B	Cord Spacer	1
12	0J03663A	Switch Cover (U.S.A., Canada, Japan, 220V Class 2, Australia & UK)	1
	0M03946A	Voltage Selector Lock Plate C (Others)	1
*13	0B07092U	Voltage Selector (Others)	1
14	0J04079A	Cushion B	3
15	0M03458B	Pass Label	1
*16	0M04075A	Fuse Caution Label (U.S.A. & Canada)	1
17	0M03794A	Voltage Label 100V (Japan)	1
	0M03796A	Voltage Label 220V (220V Class 2)	1
	0M03797A	Voltage Label 240V (UK & Australia)	1
	0M03955A	Voltage Label 120V/220V-240V (Others)	1
* —	0M03844B	Power Cord Label (UK)	1
—	0F01071A	Free-up Belt	1
—	0M04065A	Serial Number Plate	1
L01	0B08720A	Plastic Rivet	4
L02	0E00594A	Screw M3x8 Philips Binding Head (Bronze)	3
*L03	0E00507A	Nut Hex. M3	3

8.16. Rear Panel Ass'y (D07)

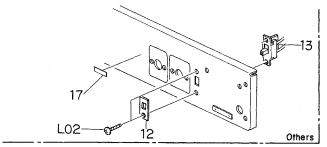

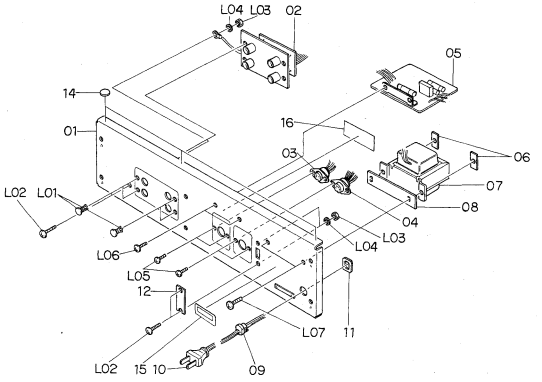

Fig. 8.16

Schematic Ref. No.	Part No.	Description	Q'ty
* L04	0E00581A	Washer 3mm (Spring)	3
L05	0E00714A	Screw M2.6x6 Philips Binding Head (Bronze)	4
L06	0E00593A	Screw M3x6 Philips Binding Head (Bronze)	2
L07	0E00756A	Screw M4x8 Philips Binding Head (Bronze)	2
—	0J03644A	Chobert Rivet	2
		*: Depends on the versions.	

Schematic Ref. No.	Part No.	Description	Q'ty
E01	**CA08117B**	**Reel Motor Ass'y** Serial No.: A11501001 —	1
01	0C08218A	Reel Motor	1
02	0C08063F	Reel Motor Pulley	1
E02	**CA08034A**	**Control Motor Ass'y** Serial No.: A11501001 —	1
01	0C08137A	Control Motor	1
02	0C08064A	Control Motor Pulley	1
03	0B09292A	Ceramic Capacitor 0.1μ 50V	1
04	0M03985A	Control Motor Label	1
05	0M03988A	Motor Seal B	1
E03	**CA08148A**	**Azimuth Alignment Motor Ass'y** Serial No.: A11501001 —	1
01	CA08149A	Azimuth Motor Ass'y	1
02	0C08099B	Control Motor Belt	1
03	0C08229B	Drive Pulley	1
04	0C08230B	Drive Pulley Shaft	1
05	0C08231B	Drive Nut	1
06	0C08232C	Drive Bar	1
07	0C08233G	Drive Unit Base	1
L01	0E00226A	Screw M2.6x4 Philips Pan Head	2
L02	0E00837A	Stopper Ring 3mm	1
F01	**CA08147A**	**Head Mount Base Ass'y** Serial No.: A11501001 —	1
01	0C08028C	Head Height Adjustment Gear	2
02	0C08027E	Head Height Adjustment Screw	4
03	0C08026D	Azimuth Alignment Screw	2
04	0C08161B	Spring Stopper	2
05	0C08187B	Head Plate Spring	2
06	0C08236A	Azimuth Alignment Wire Hold Plate	1
07	CA08083C	Head Mount Base Sub Ass'y	1
08	CA08158A	P-8L Playback Head Ass'y	1
09	0C08235A	Azimuth Alignment Plate	1
10	CA08150A	R-8L Record Head Ass'y	1
L01	0E00917A	BT Screw M2.6x5 Philips Pan Head	2
F02	**CA08053B**	**Supply Pressure Roller Ass'y** Serial No.: A11501001 —	1
01	0C08164F	Pressure Roller	1
02	0C08189B	Supply Tape Guide	1
03	CA08061A	Supply Pressure Roller Arm Ass'y	1
L01	0E00042A	E-Ring 1.5mm	1
L02	0C08024A	Washer 2mm	2
L03	0E00788A	BT Screw M2x8 Philips Pan Head	1

Schematic Ref. No.	Part No.	Description	Q'ty
F03	**CA08079B**	**Take-up Pressure Roller Ass'y** Serial No.: A11503891 —	1
01	0C08164F	Pressure Roller	1
02	0C08181C	Take-up Tape Guide	1
03	CA08024A	Take-up Pressure Roller Arm Ass'y	1
L01	0E00042A	E-Ring 1.5mm	1
L02	0C08024A	Washer 2mm	2
L03	0E00788A	BT Screw M2x8 Philips Pan Head	1
F03	**CA08079A**	**Take-up Pressure Roller Ass'y** Serial Nos.: A11501001 — A11503890	1
01	0C08164F	Pressure Roller	1
02	0C08181B	Take-up Tape Guide	1
03	CA08024A	Take-up Pressure Roller Arm Ass'y	1
L01	0E00042A	E-Ring 1.5mm	1
L02	0C08024A	Washer 2mm	2
L03	0E00788A	BT Screw M2x8 Philips Pan Head	1
F04	**CA08104A**	**Head Base Ass'y D** Serial No.: A11501001 —	1
01	GA02083A	E-8LH Erase Head	1
02	0C08158C	EH Hold Plate	1
03	0C08166A	EH Hold Plate Spring	1
04	0C08174C	Cassette Hold Spring	1
05	CA08003P	Head Base Ass'y	1
06	0C08175A	Head Base L Spring	3
07	0B08649E	2P-H Connector	1
L01	0E00889A	Screw M1.7x8 Philips Pan Head	2
L02	0E00909A	Screw M2x6 Philips Pan Head	3
L03	0E00117A	Washer 2mm	3
L04	0E00853A	BT Screw M2x3 Philips Pan Head	1
F05	**CA08125A**	**Cassette Case Holder L Ass'y** Serial No.: A11501001 —	1
01	CA08090F	Cassette Case Holder L Sub Ass'y	1
02	0C08073C	Lid Arm A	1
03	0C08195F	Eject Arm Holder	1
04	0C08196B	Eject Arm A	1
05	0C08197C	Eject Arm B	1
06	0C08199B	Eject Arm Joint	1
07	0C08114A	Lid Arm Spring	1
08	0C08211C	Eject Arm Spring	1
L01	0E00837A	Stopper Ring 3mm	1
L02	0E00838A	Stopper Ring 4mm	1
L03	0E00865A	BT Screw M3x10 Philips Binding Head	2
F06	**CA08022A**	**Cassette Case Holder R Ass'y** Serial No.: A11501001 —	1
01	0C08133A	Eject Sensor	1
02	CA08044A	Cassette Case Holder R Sub Ass'y	1
L01	0E00840A	BT Screw M2x8 Philips Pan Head	2

8.17. Reel Motor Ass'y (E01)

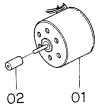

Fig. 8.17

8.18. Control Motor Ass'y (E02)

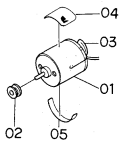

Fig. 8.18

8.19. Azimuth Alignment Motor Ass'y (E03)

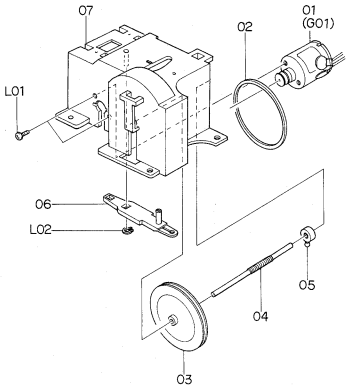

Fig. 8.19

8.20. Head Mount Base Ass'y (F01)

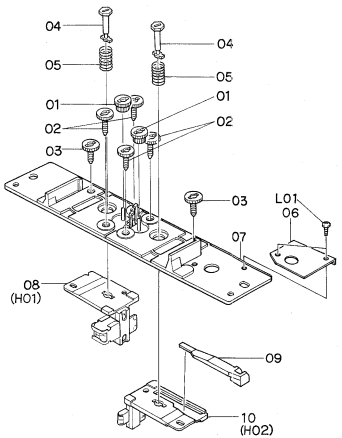

Fig. 8.20

8.21. Supply Pressure Roller Ass'y (F02)

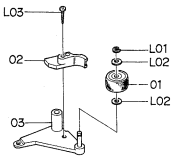

Fig. 8.21

8.22. Take-up Pressure Roller Ass'y (F03)

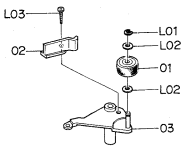

Fig. 8.22

8.23. Head Base Ass'y D (F04)

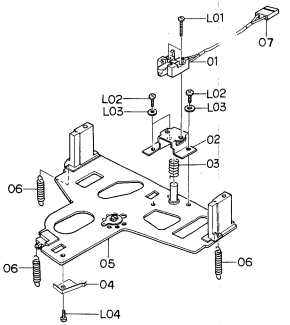

Fig. 8.23

8.24. Cassette Case Holder L Ass'y (F05)

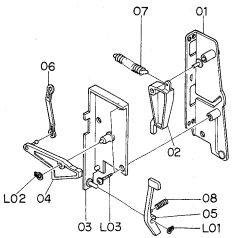

Fig. 8.24

8.25. Cassette Case Holder R Ass'y (F06)

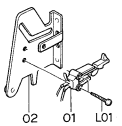

Fig. 8.25

Schematic Ref. No.	Part No.	Description	Q'ty
F07	**CA08099A**	**Auto Shut-off Ass'y** Serial No.: A11501001 –	**1**
01	0C08047A	Shut-off Pulley	2
02	0C08206B	Shut-off Pulley	1
03	0C08210A	Shut-off Pulley Shaft	1
04	0C08207B	Shut-off Pulley Holder	1
05	BA08100A	Shut-off P.C.B. Ass'y	1
F08	**CA08030A**	**Pneumatic Damper Ass'y** Serial No.: A11501001 –	**1**
01	0C08058C	Damper Piston	1
02	0C08102B	Damper Ring	1
03	0C08010C	Damper Plate	1
04	0C08059E	Sylinder	1
L01	0E00874A	Stopper Ring CS 2mm	1
F09	**CA08105A**	**Pitch Control Holder Ass'y** Serial No.: A11501001 –	**1**
01	0B07283A	Memory Switch	1
02	0B07282A	Volume Control 20kΩ (B)	1
03	0C08214D	Pitch Control Holder	1
L01	0E00125A	Screw M2x6 Philips Countersunk	2
L02	–	Volume Nut	(1)
L03	–	Volume Washer	(1)
G01	**CA08149A**	**Azimuth Motor Ass'y** Serial No.: A11501001 –	**1**
01	0C08137A	Control Motor	1
02	0C08064A	Control Motor Pulley	1
03	0B09292A	Ceramic Capacitor 0.1μ 50V Z	2
04	0M03985A	Motor Label 730	1
05	0M03988A	Motor Seal A	1
06	0B08708A	2P Connector	1
H01	**CA08158A**	**P-8L Playback Head Ass'y** Serial No.: A11501001 –	**1**
01	0C08160F	Head Plate	1
02	GA02034A	P-8L Playback Head	1
03	0C08169D	Pad Lifter 54	1
04	0B08647D	4P-H Connector	1
L01	0E00886A	Screw M1.7x6.5 Philips Pan Head	2
H02	**CA08150A**	**R-8L Record Head Ass'y** Serial No.: A11501001 –	**1**
01	0C08159G	Head Plate	1
02	GA01050A	R-8L Record Head	1
03	0B08648D	4P-H Connector	1
L01	0E00887A	Screw M1.7x4 Philips Pan Head	2

8.26. Auto Shut-off Ass'y (F07)

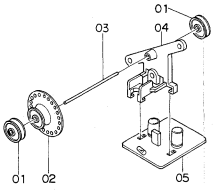

Fig. 8.26

8.27. Pneumatic Damper Ass'y (F08)

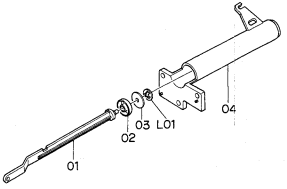

Fig. 8.27

8.28. Pitch Control Holder Ass'y (F09)

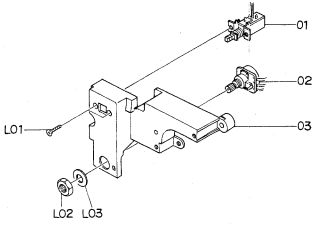

Fig. 8.28

8.29. Azimuth Motor Ass'y (G01)

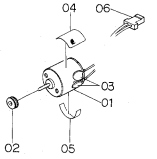

Fig. 8.29

8.30. P-8L Playback Head Ass'y (H01)

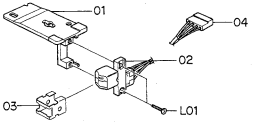

Fig. 8.30

8.31. R-8L Record Head Ass'y (H02)

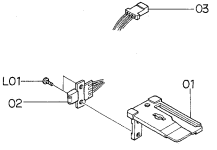

Fig. 8.31

9. OVERALL TIMING CHART

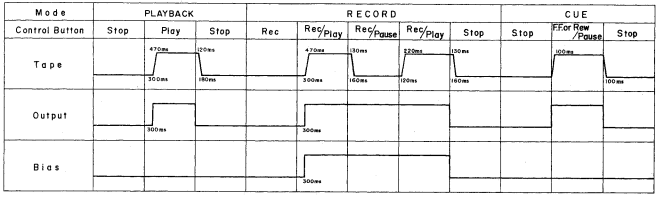

Fig. 9

10. EQ. AMP. FREQUENCY RESPONSE

10.1. Playback Frequency Response

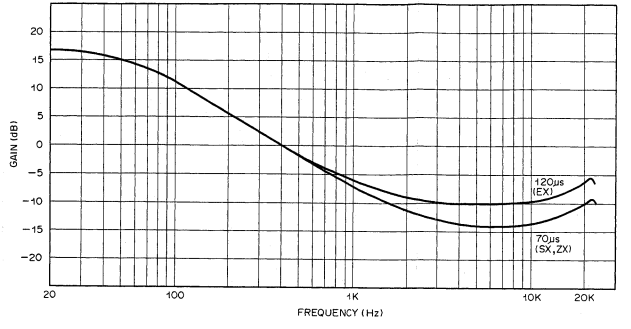

Fig. 10.1

10.2. Record Current Frequency Response

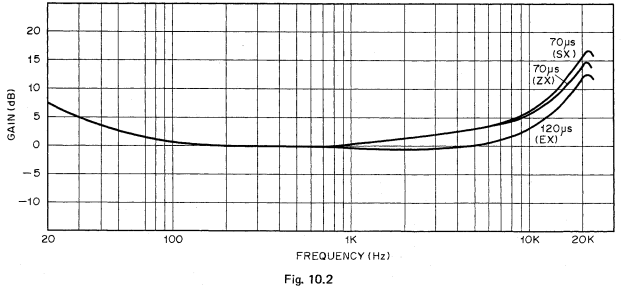

Fig. 10.2

11. BLOCK DIAGRAMS

11.1. Amplifier

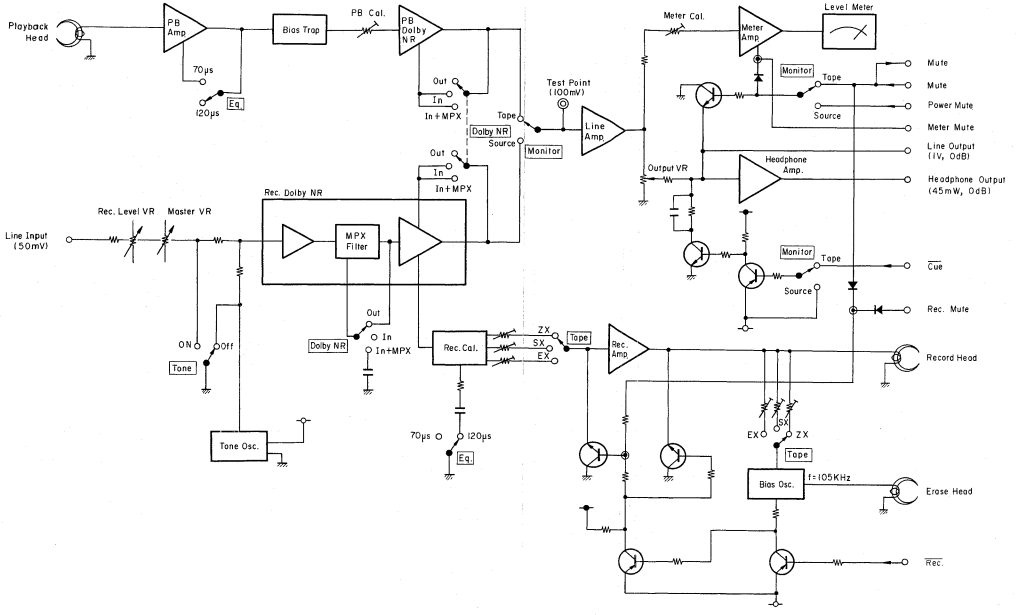

Fig. 11.1

11.2. Mechanism Control

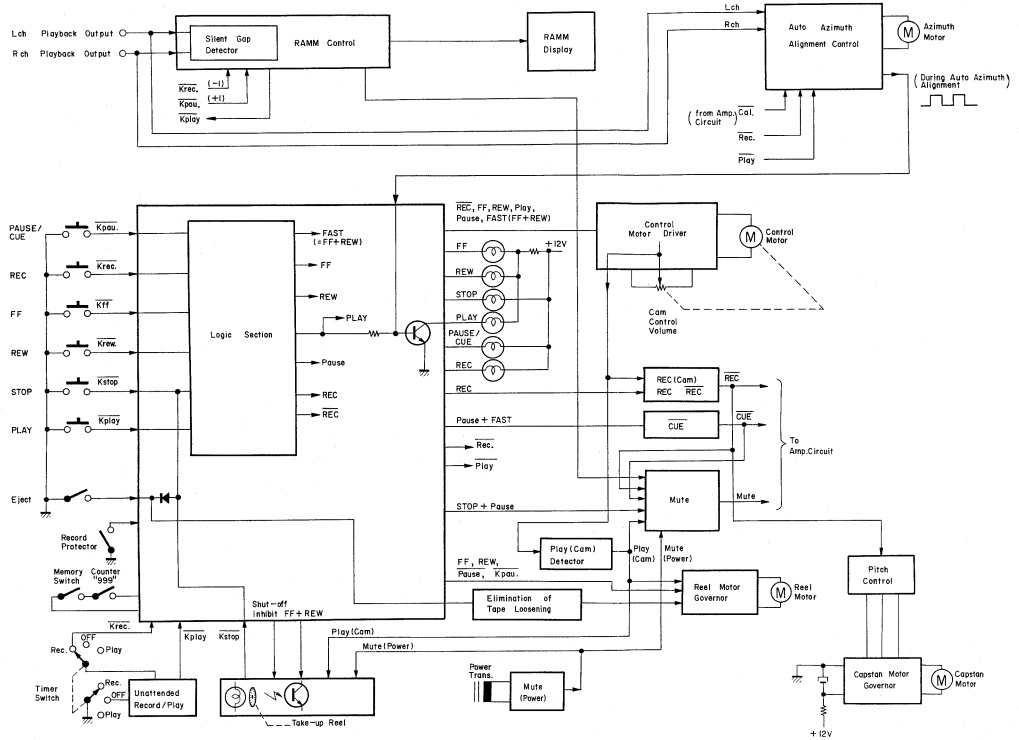

Fig. 11.2

12. WIRING DIAGRAM

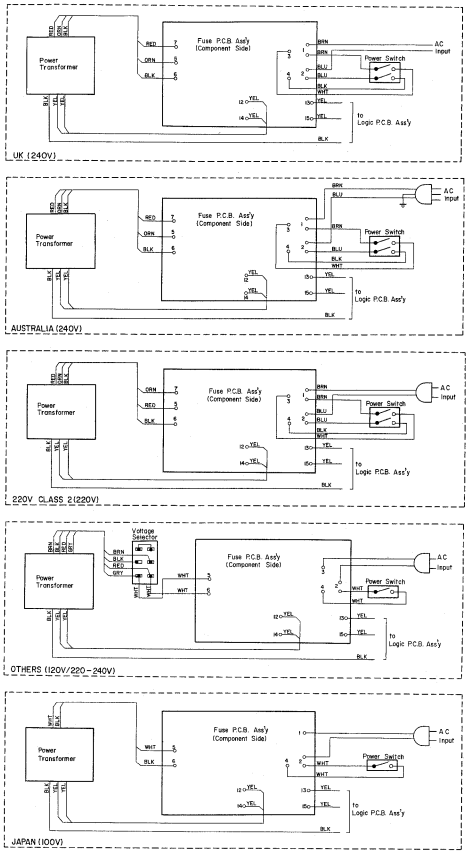

Fig. 12.1

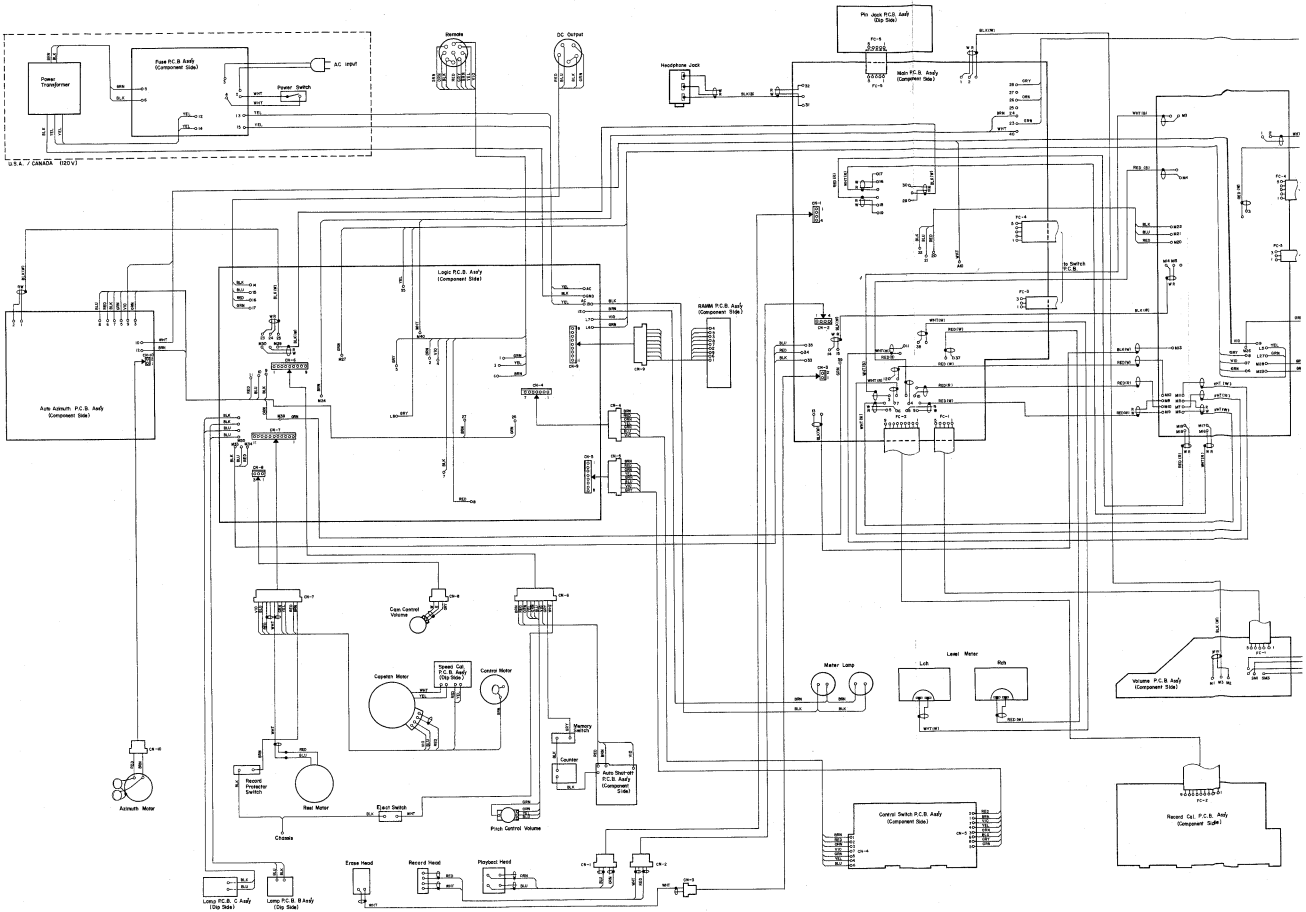

Fig. 12.2

Notes: 1. Table of wire colors
- BLK — Black
- BLU — Blue
- GRN — Green
- RED — Red
- WHT — White
- ORN — Orange
- GRY — Gray
- BRN — Brown
- YEL — Yellow
- VIO — Violet

2. Table of wire tube colors
- (B) — Black
- (R) — Red
- (W) — White
- (G) — Gray

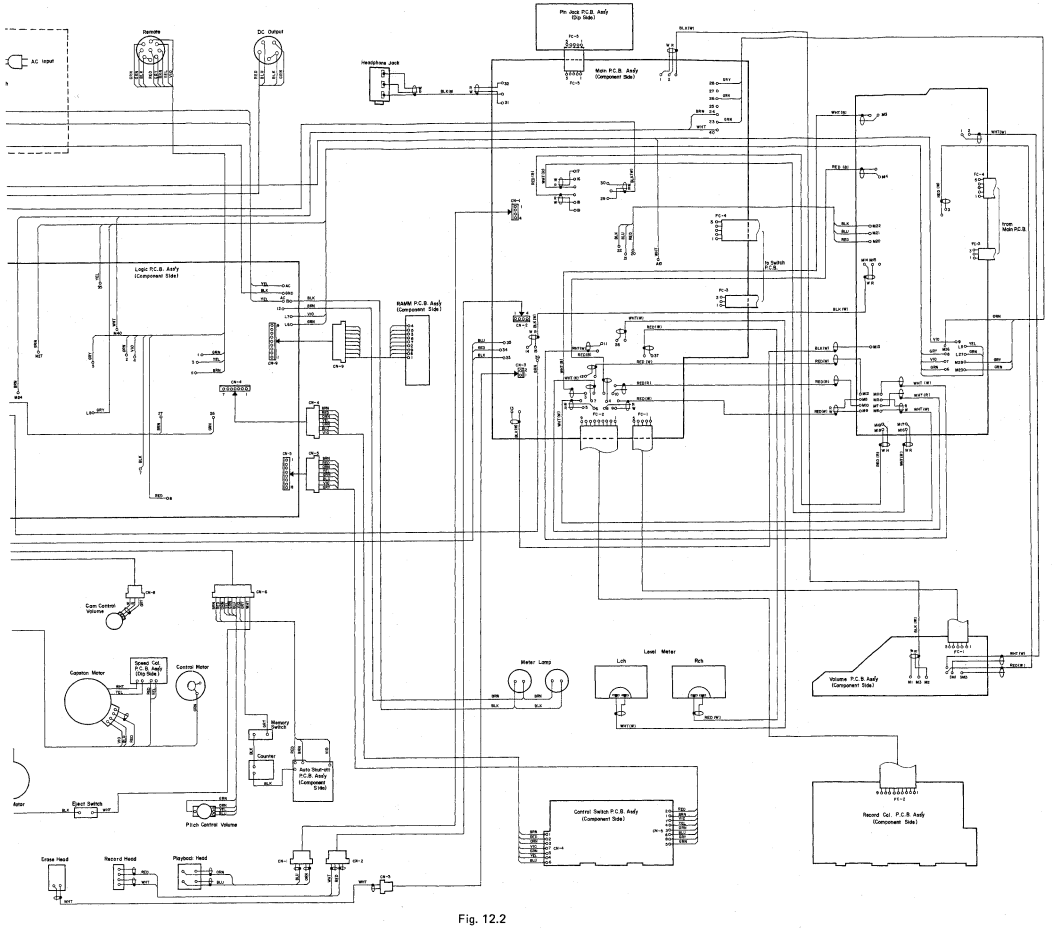
AC Input
Remote
DC Output
Headphone Jack
Pin Jack P.C.B. Assy (Dip Side)
Main P.C.B. Assy (Component Side)
Logic P.C.B. Assy (Component Side)
RAMM P.C.B. Assy (Component Side)
To Switch P.C.B.
From Main P.C.B.
Cam Control Volume
Capstan Motor
Speed Ctl. P.C.B. Assy (Dip Side)
Control Motor
Memory Switch
Counter
Auto Shut-off P.C.B. Assy (Component Side)
Eject Switch
Pitch Control Volume
Meter Lamp
Level Meter
Lch
Rch
Volume P.C.B. Assy (Component Side)
Control Switch P.C.B. Assy (Component Side)
Record Ctl. P.C.B. Assy (Component Side)
Erase Head
Record Head
Playback Head

Fig. 12.2

13. SCHEMATIC DIAGRAMS

13.1. Amplifier

Notes:
1. Diode is 1SS53, 1S953, or 1S1555 unless otherwise specified.
2. Resistor and capacitor marked with * show typical value.

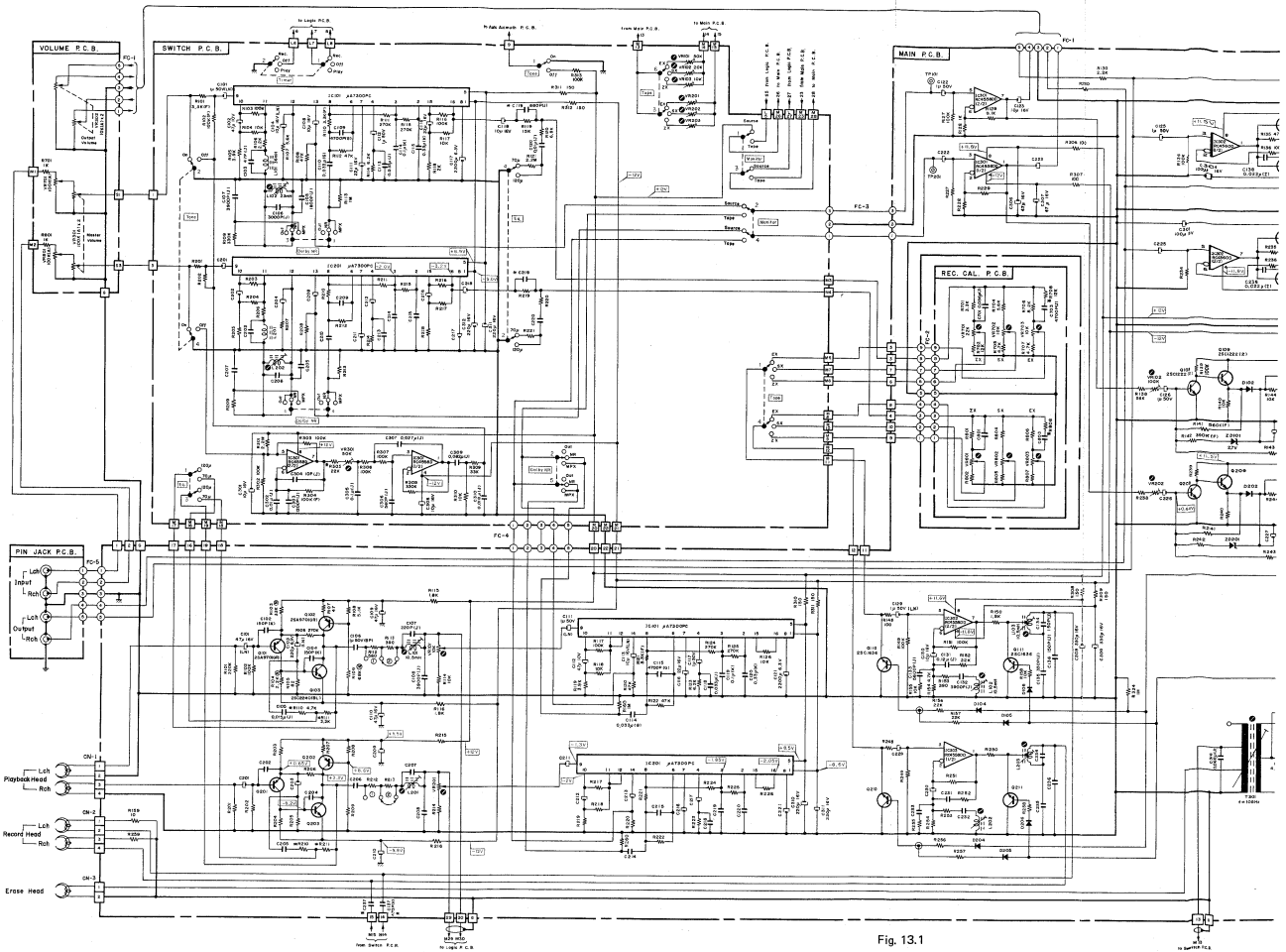

Fig. 13.1

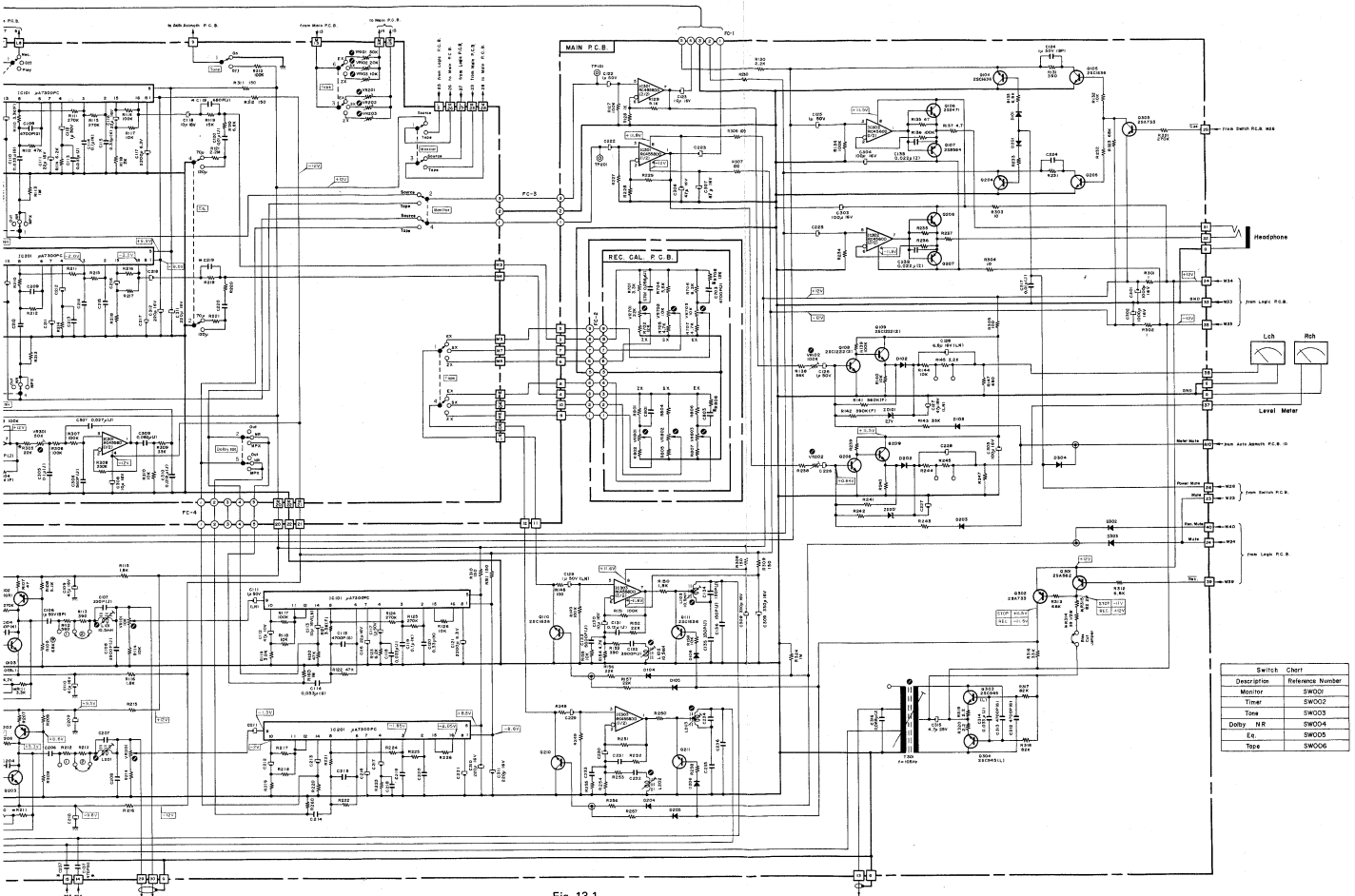

Switch Chart	
Description	Reference Number
Monitor	SW001
Timer	SW002
Tone	SW003
Dolby NR	SW004
Eq	SW005
Tape	SW006

Fig. 13.1

13.2. Mechanism Control

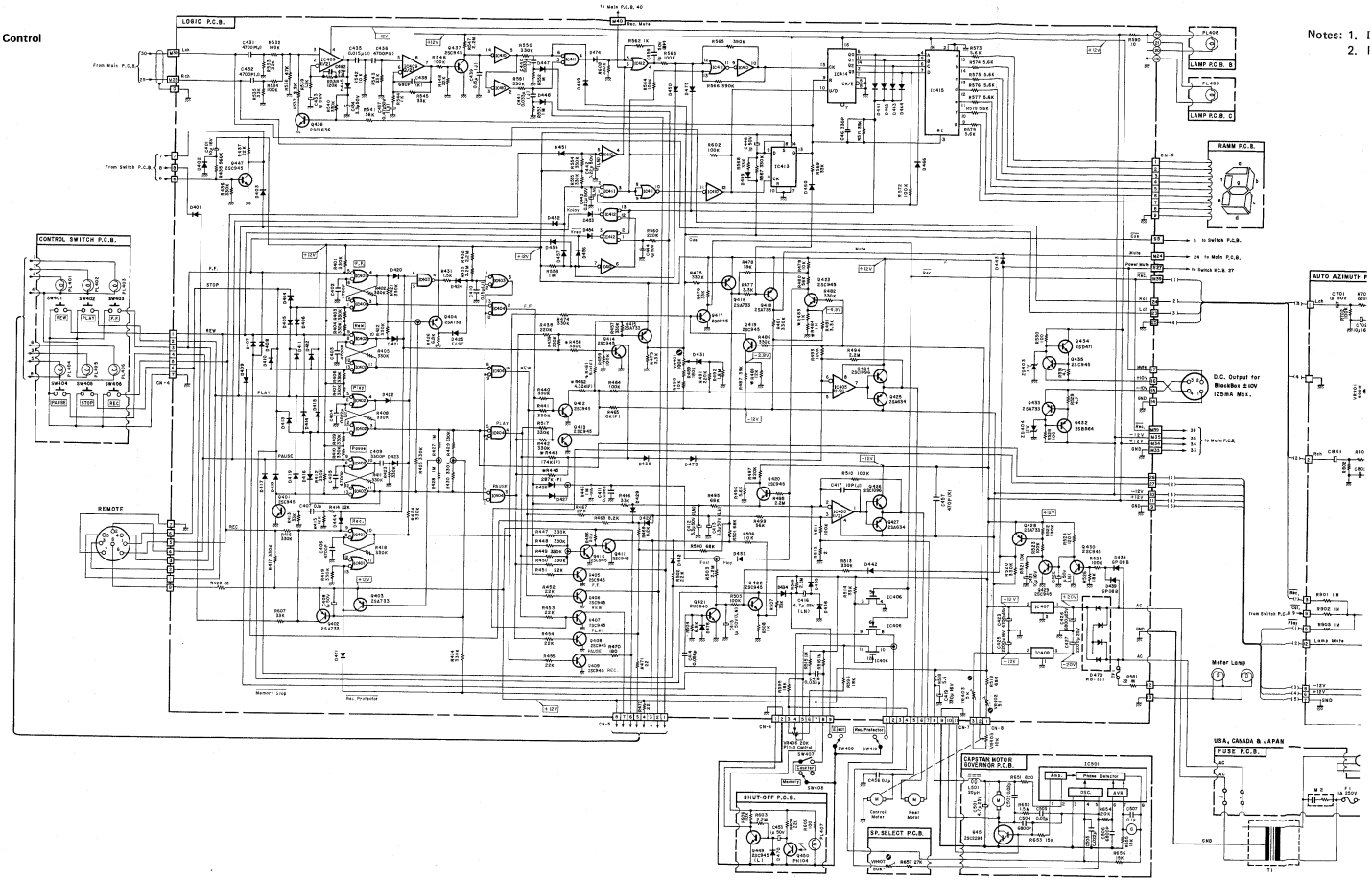

Notes: 1. D
2. I

Fig. 13.2

Notes: 1. Diode is 1SS53, 1S953, or 1S1555 unless otherwise specified.
2. Resistor and capacitor marked with * show typical value.

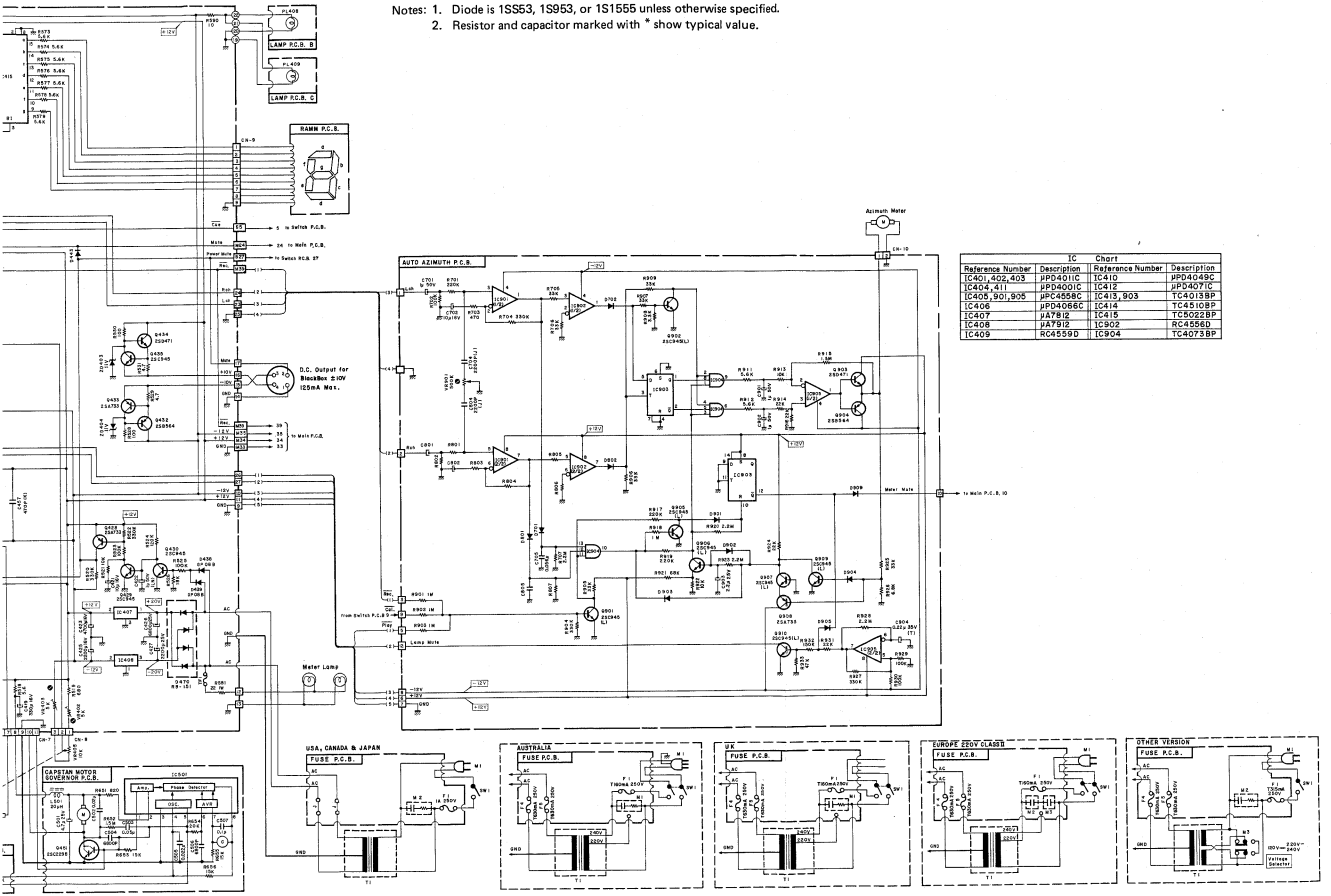

IC Chart

Reference Number	Description	Reference Number	Description
IC401, 402, 403	μPD4011C	IC410	μPD4049C
IC404, 411	μPD4001C	IC412	μPD4071C
IC408, 901, 905	μPC4558C	IC413, 903	TC4013BP
IC406	μPD4066C	IC414	TC4510BP
IC407	μA7812	IC415	TC5022BP
IC408	μA7912	IC902	RC4556D
IC409	RC4559D	IC904	TC4073BP

Fig. 13.2

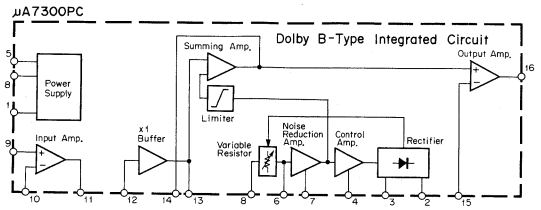

Fig. 13.3 Dolby NR IC μA7300PC

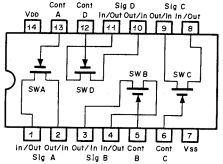

Fig. 13.4 Bilateral Switch C-MOS IC μPD4066C

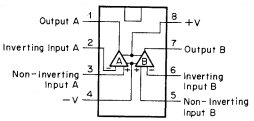

Fig. 13.5 Operational Amp. IC

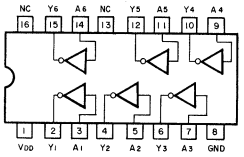

Fig. 13.6 Inverter C-MOS IC μPD4049C

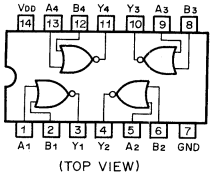

Fig. 13.7 NOR Gate C-MOS IC μPD4001C

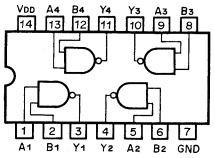

Fig. 13.8 NAND Gate C-MOS IC μPD4011C

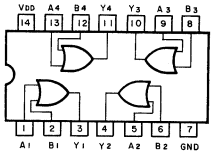

Fig. 13.9 OR Gate C-MOS IC μPD4071C

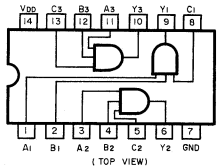

Fig. 13.10 AND Gate C-MOS IC μPD4073C

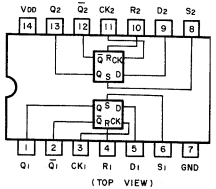

Fig. 13.11 D-Type Flip-Flop C-MOS IC TC4013BP

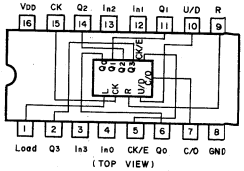

Fig. 13.12 BCD Up/Down Counter C-MOS TC4510BP

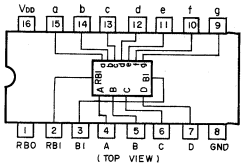

Fig. 13.13 BCD to 7-segment Decoder/Driver C-MOS IC TC5022BP

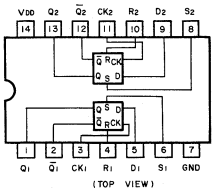

Fig. 13.11 D-Type Flip-Flop C-MOS IC TC4013BP

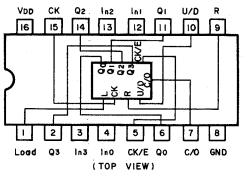

Fig. 13.12 BCD Up/Down Counter C-MOS TC4510BP

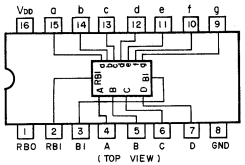

Fig. 13.13 BCD to 7-segment Decoder/Driver C-MOS IC TC5022BP

14. SPECIFICATIONS

Power Source	100, 120, 120/220-240, 220 or 240 V; 50/60 Hz (according to country of sale)
Power Consumption	27 W max.
Tape Speed	1-7/8 ips. (4.8 cm/sec.) ± 0.5%
Frequency Response	10-22,000 Hz ± 3 dB (–20 dB rec. level, ZX tape)
Signal-to-Noise Ratio	Better than 66 dB (IHF-A WTD RMS, ref. 400 Hz, 3% THD, w/Dolby NR, ZX tape, 70 μsec EQ)
Total Harmonic Distortion	Less than 0.8% at 400 Hz, 0 dB w/ZX tape Less than 1.0% at 400 Hz, 0 dB w/SX, EX-II tapes
Wow-and-Flutter	Less than 0.08% WTD peak, 0.04% WTD RMS
Erasure	Better than 60 dB below saturation level at 1 kHz
Separation	Better than 37 dB at 1 kHz, 0 dB
Crosstalk	Better than 60 dB at 1 kHz, 0 dB
Bias Frequency	105 kHz
Input	50 mV, 50 k ohms
Output	1 V (400 Hz, 0 dB, output control at max.) 2.2 k ohms
Headphone Output	45 mW (at 400 Hz, 0 dB, 8 ohms)
DC Output Jack	±10 V DC, 125 mA max.
Dimensions	482(W) x 143(H) x 340(D) millimeters 19(W) x 5-5/8(H) x 13-3/8(D) inches
Approximate Weight	9 kg. 19 lb. 13 oz

- Specifications and appearance design are subject to change for further improvement without notice.
- Dolby NR under license from Dolby Laboratories.
- The word "DOLBY" and the Double-D-Symbol are trademarks of Dolby Laboratories.