JVC

SERVICE MANUAL

STEREO INTEGRATED AMPLIFIER

MODEL No. AX-550BK



Contents

	Page
Safety Precautions	1-2
Front Panel	1-3
Operation	1-4
Specifications	1-5
Block Diagram	1-6
Removal Procedures	1-7
Adjustment Procedures	1-8
Schematic Diagram	Insertion
Connection Diagram	Insertion
Parts List	Separate Volume Insertion
Internal Block Diagrams of ICs	1-9

No. 2973
Feb. 1987

Safety Precautions

1. The design of this product contains special hardward and many circuits and components specially for safety purposes.
   For continued protection, no changes should be made to the original design unless authorized in writing by the manufacturer. Replacement parts must be identical to those used in the original circuits. Service should be performed by qualified personnel only.
2. Alterations of the design or circuitry of the product should not be made. Any design alterations or additions will void the manufacturer's warranty and will further relieve the manufacturer of responsibility for personal injury or property damage resulting thereform.
3. Many electrical and mechanical parts in the product have special safety-related characteristics. These characteristics are often not evident from visual inspection nor can the protection afforded by them necessarily be obtained by using replacement components rated for higher voltage, wattage, etc. Replacement parts which have these special safety characteristics are indentified in the Parts List of Service Manual. Electrical components having such features are identified by shading on the schematics and by (⚠) on the Parts List in the Service Manual. The use of a substitute replacement which does not have the same safety characteristics as the recommended replacement part shown in the Parts List of Service Manual may create shock, fire, or other hazards.
4. The leads in the products are routed and dressed with ties, clamps, tubings, barriers and the like to be separated from live parts, high temperature parts, moving parts and/or sharp edges or the prevention of electric shock and fire hazard.
   When service is required, the original lead routing and dress should be observed, and it should be confirmed that they have been returned to normal, after reassembling.
5. Leakage current check
   (Electrical shock hazard testing)
   After re-assembling the product, always perform an isolation check on the exposed metal pars of the product (antenna terminals, knobs, metal cabinet, screw heads, headphone jack, control shafts, etc.) to be sure the product is safe to operate without danger of electrical shock.
   Do not use a line isolation transformer during this check.
   - Plug the AC line cord directly into the AC outlet. Using a "Leakage Current Tester", measure the leakage current from each exposed metal part of the cabinet, particularly any exposed metal part having a return path to the chassis, to a known good earth ground. Any leakage current must not exceed 0.5 mA AC (r.m.s.).
   - Alternate check method.
     Plug the AC line cord directly into the AC outlet. Use an AC voltmeter having 1,000 ohms per volt or more sensitivity in the following manner. Use an AC line cord directly into the AC outlet. Connect a 1,500 Ω 10 W resistor paralleld by a 0.15 μF AC-type capacitor between an exposed metal part and a known good earth ground.
     Measure the AC voltage across the resistor with the AC voltmeter.
     Move the resistor connection to each exposed metal part, particularly any exposed metal part having a return path to the chassis, and measure the AC voltage across the resistor. Now, reverse the plug in the AC outlet and repeat each measurement. Any voltage measured must not exceed 0.75 V AC (r.m.s.). This corresponds to 0.5 mA AC (r.m.s.).

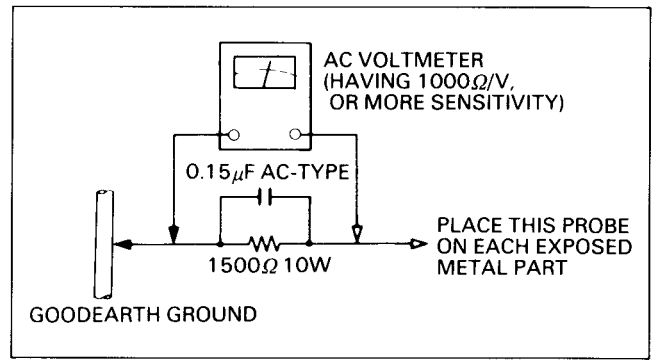

CHECK THE VOLTAGE SELECTOR'S SETTING
(Except for U.S.A., Canada, Australia, U.K. and Continental Europe.)
Before inserting the power plug, please check that the voltage selector's setting corresponds with the line voltage in your area. If it doesn't, be sure to reset the voltage selector before this equipment.
The voltage selector may be located on the rear or bottom of the unit, or underneath the platter.
CAUTION: Before setting the voltage selector to the proper voltage, disconnect the power plug.

FRONT PANEL

These instructions are prepared for three models: AX-330BK/AX-440BK/AX-550BK.
Therefore, read the items below concerning each model.

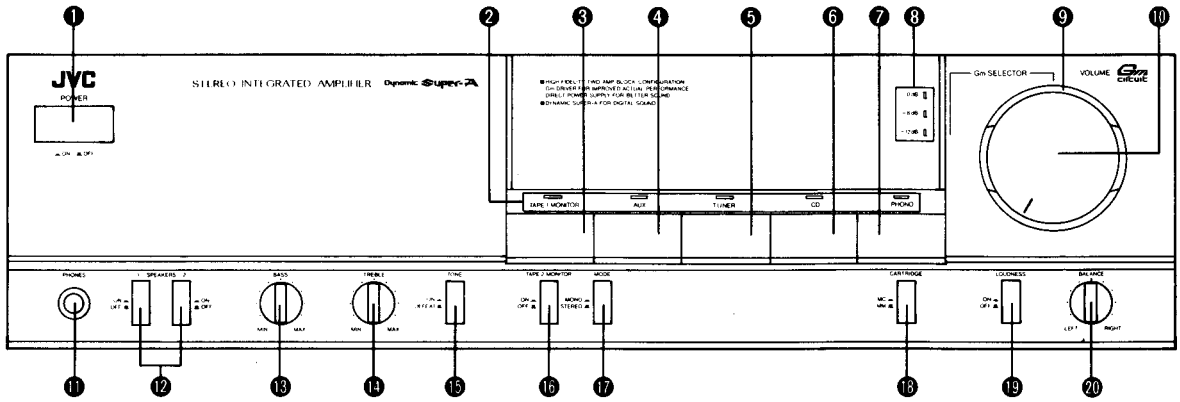

❶ POWER
ON (—): Press this button to turn the power on.
OFF (▬): Set to this position to turn the power off.

Notes:
- **When power is not supplied to this amplifier for 2 – 3 days, the source select button pressed before the power was switched off may be lost when the power is switched on again. If this happens, set the buttons, etc. again.**
- **An electronic source selector is used in this unit. When the POWER button is first switched on, two or more sources or no source may be selected. Make sure to input the source select data by pressing one of the source selectors.**
- **If the POWER button is pressed repeatedly to switch on and off too quickly, the same phenomenon as the above will occur.**

❷ SOURCE INDICATOR
The indicator corresponding to the source select button pressed lights.

❸ TAPE 1 MONITOR
Press to listen to a tape deck connected to the TAPE 1 terminals.

❹ AUX
Press to listen to the source connected to the AUX terminals.

❺ TUNER
Press to listen to radio broadcasts by a tuner connected to the TUNER terminals.

❻ CD
Press to listen to the source connected to the CD terminals.

❼ PHONO
Press to listen to records played by a turntable connected to the PHONO terminals.

❽ Gm SELECTOR indicators (AX-550BK)
These indicators are illuminated according to the setting of the Gm SELECTOR.
0 dB: Set the Gm SELECTOR so that this indicator lights when listening to a high-volume level.
-6 dB: Set the Gm SELECTOR so that this indicator lights when listening to a middle-volume level.
-12 dB: Set the Gm SELECTOR so that this indicator lights when listening to a low-volume level.

❾ Gm SELECTOR (AX-550BK)
Setting the Gm selector to -6 dB divides the volume at 0 dB by 4 while setting it to -12 dB divides it by 16. As the Gm selector is turned from 0 dB to -6 dB and -12 dB, residual noise becomes progressively less. Use the Gm selector together with the VOLUME control.

❿ VOLUME
Controls the volume of the speakers and headphones.

⓫ PHONES (Headphones jack)
Plug stereo headphones into this jack for private listening.

⓬ SPEAKERS
Press to switch the speakers connected to the SPEAKERS 1 or 2 terminals on (—) and off (▬).

Note: (AX-330BK, AX-440BK)
- **When speakers are connected to only one pair of SPEAKERS terminals, press only the SPEAKERS button of the system connected; if both buttons are pressed, sound will not be heard from either speaker system. When two pairs of speakers are connected and either or both SPEAKERS buttons is/are pressed, sound will be heard from either or both speaker system(s).**

⓭ BASS
Turn clockwise to boost bass response and counterclockwise to decrease it.

⓮ TREBLE
Turn clockwise to boost treble response and counterclockwise to decrease it.

⓯ TONE (AX-440BK, AX-550BK)
ON (—): Press to adjust the tone with the BASS and TREBLE controls.
DEFEAT (▬): Press to this position to obtain a standard (flat) frequency response.

⓰ TAPE 2 MONITOR
ON (—): Set to this position to listen to the tape deck connected to the TAPE 2 terminals of this unit. If your tape deck is of the 3-head type, you can monitor the recorded sound while recording by setting this button to ON.
OFF (▬): Keep this button set to this position, except when you want to listen to the tape deck connected to the TAPE 2 terminals of this unit.

⓱ MODE (AX-440BK, AX-550BK)
MONO (—): Set to this position to have both speakers produce the sound of both the left- and right-channel signals mixed.
STEREO (▬): Normally set to this position.

⓲ CARTRIDGE (AX-440BK, AX-550BK)
MC (—): Press in when using an MC cartridge having an output of less than 0.5 mV.
MM (▬): Press again when using an MM or MC cartridge having an output of more than 0.5 mV.

⓳ LOUDNESS
ON (—): To compensate for the ear's lower sensitivity at low listening levels.
OFF (▬): To bypass the LOUDNESS circuit.

⓴ BALANCE
Balances the volume between the left and right speakers. Usually set it to the center click position.

OPERATION

Before operation, always be sure to set VOLUME at minimum.
When the volume is increased after selecting a source position with no equipment connected to the input terminal, other connected devices (such as speakers) may be adversely affected by external noise and inductive hum.

Listening to broadcasts

1. Connect a tuner to the TUNER terminals on the rear panel.
2. Press the POWER button on.
3. Press the TUNER button and make sure that the TAPE 1 MONITOR and TAPE 2 MONITOR buttons are set to off.
4. Select the speaker system with the SPEAKERS switches.
5. Operate the tuner according to its instruction manual.
6. Adjust the VOLUME, LOUDNESS, BALANCE and BASS/TREBLE controls.

Listening to records

1. Connect a turntable to the PHONO terminals on the rear panel.
2. Press the POWER button on.
3. Set the CARTRIDGE button of this unit according to the cartridge in use. (AX-440BK, AX-550BK)
4. Press the PHONO button and make sure that the TAPE 1 MONITOR and TAPE 2 MONITOR buttons are set to off.
5. Select the speaker system with the SPEAKERS switches.
6. Operate the turntable according to its instruction manual.
7. Adjust the VOLUME, LOUDNESS, BALANCE and BASS/TREBLE controls.

Listening to tapes

To listen to the tape deck connected to the TAPE 1 or TAPE 2 terminals.

1. Connect a tape deck to the PLAY terminals of TAPE 1 or TAPE 2.
2. Press the POWER button on.
3. Press the TAPE 1 MONITOR button to play back the TAPE 1 deck. For playback of the TAPE 2 deck, press the TAPE 2 MONITOR button to ON (▬).
4. Select the speaker system with the SPEAKERS switches.
5. Operate the tape deck for playback according to its instruction manual.
6. Adjust the playback sound controls as required.

Note:

- **Do not place the tape deck directly on the amplifier, because it may cause the amplifier to malfunction.**

Using stereo headphones

Stereo headphones can be plugged into the front panel jack. Plugging headphones into the PHONES jack does not switch off the speaker sound.

Recording tapes

To record from disc sources on to a tape deck.

1. Connect a tape deck to the REC terminals of the TAPE 1 or TAPE 2 terminals.
2. Press the POWER button on.
3. Select a speaker system if you wish to hear the sound while recording.
4. Press the PHONO button.
5. Operate the turntable.
6. Operate the tape deck for recording.

To record from other sources (TUNER, CD, AUX)

Press the TUNER, CD or AUX button to record radio broadcasts, or the source connected to the CD, AUX terminals.
All other operations are identical to when recording from disc source.

Tape dubbing

Dubbing from the TAPE 1 to TAPE 2 is carried out as follows:

1. Press the TAPE 1 MONITOR button.
2. Play back the TAPE 1 deck.
3. Operate the TAPE 2 deck for recording.

Notes:

- **You can also monitor the sound being recorded with headphones.**
- **The sound you hear from the speakers or headphones is the souce sound, not that being recorded on the tape.**
- **Dubbing from TAPE 2 to TAPE 1 is not possible.**
- **The VOLUME control of this amplifier has no effect on the recording level. Adjust the recording level with the controls on the tape deck.**
- **While playing back a tape on the tape deck (to which the TAPE 2 terminals of this unit are connected), you cannot record the sources from other components.**

How to operate the monitor while recording on the tape deck

1. Connect a 3-head tape deck to the TAPE 1 or TAPE 2 terminals.
2. Make sure to connect the signal cords to the PLAY and REC terminals.
3. Select the source from which you want to record by depressing the source select button on this unit.
4. Operate the tape deck for recording as described in its operating manual.
5. By playing the source component, you can record on the tape deck.
6. While recording on the tape deck, the recorded sound can be heard by depressing the TAPE 1 MONITOR or TAPE 2 MONITOR button on this unit.

Use of S.E.A. Graphic Equalizer

The S.E.A. Graphic Equalizer is JVC's exclusive tone control system. By allowing you to independently boost or lower the response of finely divided sections of the frequency spectrum; the S.E.A. gives you much greater control over the sound quality of your stereo system. With an optionally available S.E.A. Graphic Equalizer, you can tailor the sound to your own taste for different types of music or to compensate for the particular acoustic characteristics of your audio components and listening room.
The TAPE 2 terminals of the AX-330BK, AX-440BK or AX-550BK can be used for connecting the S.E.A. Graphic Equalizer.

TROUBLESHOOTING

What appears to be a malfunction may not always be serious.
Make sure first . . . .
No sound and no light
Is the AC plug connected properly?
Are the connections made correctly?
No sound from speakers
Are speaker cords connected?
Are the SPEAKERS buttons correctly set?
Is the VOLUME control properly set?
Is your source component correctly set?
Sound from one speaker only
Are speaker cords connected correctly?
Is BALANCE control set to one extreme or the other?
Loud hum during record playing
Is turntable grounded?
Try to change cord path.
Howling noise during record playing
Is turntable too close to a speaker?

SPECIFICATIONS

AX-330BK
OVERALL CHARACTERISTICS

Output power :

60 watts per channel into 8 ohms at 1 kHz (DIN).

55 watts per channel, min. RMS, both channels driven, into 8 ohms from 20 Hz to 20 kHz, with no more than 0.007 % total harmonic distortion.

55 watts per channel, min. RMS, both channels driven, into 8 ohms at 1 kHz with no more than 0.003 % total harmonic distortion. (measured by JVC Audio Analyzer System)

Total harmonic distortion : 0.007 % (20 Hz – 20 kHz, 8 ohms) at 55 watts
Intermodulation distortion : 0.007 % (60 Hz : 7 kHz = 4 : 1, 8 ohms) at 55 watts
Power band width : 5 Hz – 50 kHz (IHF, 0.05 %, 8 ohms both channels driven)
Frequency response : 5 Hz – 80 kHz +0, -3 dB (8 ohms)
Damping factor : 35 (1 kHz, 8 ohms)
Input terminals
Input sensitivity/impedance (1 kHz)
PHONO : 2.5 mV/47 kohms
CD/AUX/TUNER/TAPE 1, 2 : 150 mV/43 kohms
Signal-to-noise ratio
PHONO : 71 dB ('66 IHF)
CD/AUX/TUNER/TAPE 1, 2 : 100 dB ('66 IHF)
PHONO (REC OUT) : 80 dB ('78 IHF)
CD/AUX/TUNER/TAPE 1, 2 (SP OUT) : 76 dB ('78 IHF)
PHONO : 67 dB (DIN)
CD/AUX/TUNER/TAPE 1, 2 : 68 dB (DIN)
Tone controls : TREBLE: +8 ±1 dB, -8 ±1 dB (at 10 kHz)
BASS: +8 ±1 dB, -8 ±1 dB (at 100 Hz)
Loudness controls (Volume control at -30 dB position) : +6 dB (at 100 Hz), +4 dB (at 10 kHz)

EQUALIZER

PHONO overload capacity
PHONO : 100 mV (0.02 % THD)
PHONO RIAA deviation
PHONO : ±0.5 dB (20 Hz – 20 kHz)
Recording output
Output level/impedance
TAPE REC-1, 2 : 150 mV/2 kohms

GENERAL

Dimensions : 435(W) x 117(H) x 306(D) mm (17-3/16" x 4-5/8" x 12-1/16")
Weight : 5.7 kg (12.6 lbs.)

Design and specifications subject to change without notice.

AX-440BK
OVERALL CHARACTERISTICS

Output power :

85 watts per channel into 8 ohms at 1 kHz (DIN).

75 watts per channel, min. RMS, both channels driven, into 8 ohms from 20 Hz to 20 kHz, with no more than 0.007 % total harmonic distortion.

80 watts per channel, min. RMS, both channels driven, into 8 ohms at 1 kHz with no more than 0.003 % total harmonic distortion. (measured by JVC Audio Analyzer System)

Total harmonic distortion : 0.007 % (20 Hz – 20 kHz, 8 ohms) at 75 watts
Intermodulation distortion : 0.007 % (60 Hz : 7 kHz = 4 : 1, 8 ohms) at 75 watts
Power band width : 5 Hz – 50 kHz (IHF, 0.05 %, 8 ohms both channels driven)
Frequency response : 5 Hz – 90 kHz +0, -3 dB (8 ohms)
Damping factor : 50 (1 kHz, 8 ohms)
Input terminals
Input sensitivity/impedance (1 kHz)
PHONO (MM) : 2.5 mV/47 kohms
PHONO (MC) : 200 μV/100 ohms
CD/AUX/TUNER/TAPE 1, 2 : 200 mV/43 kohms
Signal-to-noise ratio
PHONO (MM) : 86 dB ('66 IHF)
PHONO (MC) : 67 dB ('66 IHF)
CD/AUX/TUNER/TAPE 1, 2 : 101 dB ('66 IHF)
PHONO (MM) (REC OUT) : 82 dB ('78 IHF)
PHONO (MC) (REC OUT) : 75 dB ('78 IHF)
CD/AUX/TUNER/TAPE 1, 2 (SP OUT) : 76 dB ('78 IHF)
PHONO (MM) : 67 dB (DIN)
PHONO (MC) : 67 dB (DIN)
CD/AUX/TUNER/TAPE 1, 2 : 68 dB (DIN)
Tone controls : TREBLE: +8 ±1 dB, -8 ±1 dB (at 10 kHz)
BASS: +8 ±1 dB, -8 ±1 dB (at 100 Hz)
Loudness controls (Volume control at -30 dB position) : +6 dB (at 100 Hz), +4 dB (at 10 kHz)

EQUALIZER

PHONO overload capacity
PHONO (MM) : 100 mV (0.02 % THD)
PHONO (MC) : 8 mV (0.04 % THD)
PHONO RIAA deviation
PHONO (MM) : ±0.3 dB (20 Hz – 20 kHz)
PHONO (MC) : ±0.5 dB (20 Hz – 20 kHz)
Recording output
Output level/impedance
TAPE REC-1, 2 : 200 mV/1.8 kohms

GENERAL

Dimensions : 435(W) x 117(H) x 306(D) mm (17-3/16" x 4-5/8" x 12-1/16")
Weight : 6.4 kg (14.1 lbs.)

Design and specifications subject to change without notice.

AX-550BK
OVERALL CHARACTERISTICS

Output power :

100 watts per channel into 8 ohms at 1 kHz (DIN).

90 watts per channel, min. RMS, both channels driven, into 8 ohms from 20 Hz to 20 kHz, with no more than 0.007 % total harmonic distortion.

90 watts per channel, min. RMS, both channels driven, into 8 ohms at 1 kHz with no more than 0.003 % total harmonic distortion. (measured by JVC Audio Analyzer System)

Total harmonic distortion : 0.007 % (20 Hz – 20 kHz, 8 ohms) at 90 watts
Intermodulation distortion : 0.007 % (60 Hz : 7 kHz = 4 : 1, 8 ohms) at 90 watts
Power band width : 5 Hz – 50 kHz (IHF, 0.05 %, 8 ohms both channels driven)
Frequency response : 5 Hz – 100 kHz +0, -3 dB (8 ohms)
Damping factor : 60 (1 kHz, 8 ohms)
Input terminals
Input sensitivity/impedance (1 kHz)
PHONO (MM) : 2.5 mV/47 kohms
PHONO (MC) : 200 μV/100 ohms
CD/AUX/TUNER/TAPE 1, 2 : 200 mV/43 kohms
Signal-to-noise ratio
PHONO (MM) : 86 dB ('66 IHF)
PHONO (MC) : 68 dB ('66 IHF)
CD/AUX/TUNER/TAPE 1, 2 : 101 dB ('66 IHF)
PHONO (MM) (REC OUT) : 82 dB ('78 IHF)
PHONO (MC) (REC OUT) : 75 dB ('78 IHF)
CD/AUX/TUNER/TAPE 1, 2 (SP OUT) : 76 dB ('78 IHF)
PHONO (MM) : 67 dB (DIN)
PHONO (MC) : 67 dB (DIN)
CD/AUX/TUNER/TAPE 1, 2 : 68 dB (DIN)
Tone controls : TREBLE: +8 ±1 dB, -8 ±1 dB (at 10 kHz)
BASS: +8 ±1 dB, -8 ±1 dB (at 100 Hz)
Loudness controls (Volume control at -30 dB position) : +6 dB (at 100 Hz), +4 dB (at 10 kHz)

EQUALIZER

PHONO overload capacity
PHONO (MM) : 100 mV (0.02 % THD)
PHONO (MC) : 8 mV (0.04 % THD)
PHONO RIAA deviation
PHONO (MM) : ±0.3 dB (20 Hz – 20 kHz)
PHONO (MC) : ±0.5 dB (20 Hz – 20 kHz)
Recording output
Output level/impedance
TAPE REC-1, 2 : 200 mV/1.8 kohms

GENERAL

Dimensions : 435(W) x 117(H) x 350(D) mm (17-3/16" x 4-5/8" x 13-13/16")
Weight : 8.6 kg (19.0 lbs.)

Design and specifications subject to change without notice.

POWER SPECIFICATIONS

Areas	Line voltage & frequency	Power consumption		
		AX-330BK	AX-440BK	AX-550BK
Continental Europe	AC 220 V~, 50 Hz	160 watts	190 watts	210 watts
U.K.	AC 240 V~, 50 Hz	160 watts	190 watts	210 watts
Australia				
Other areas	AC 110/120/220/240 V~ selectable, 50/60 Hz	160 watts	190 watts	210 watts

Block Diagram

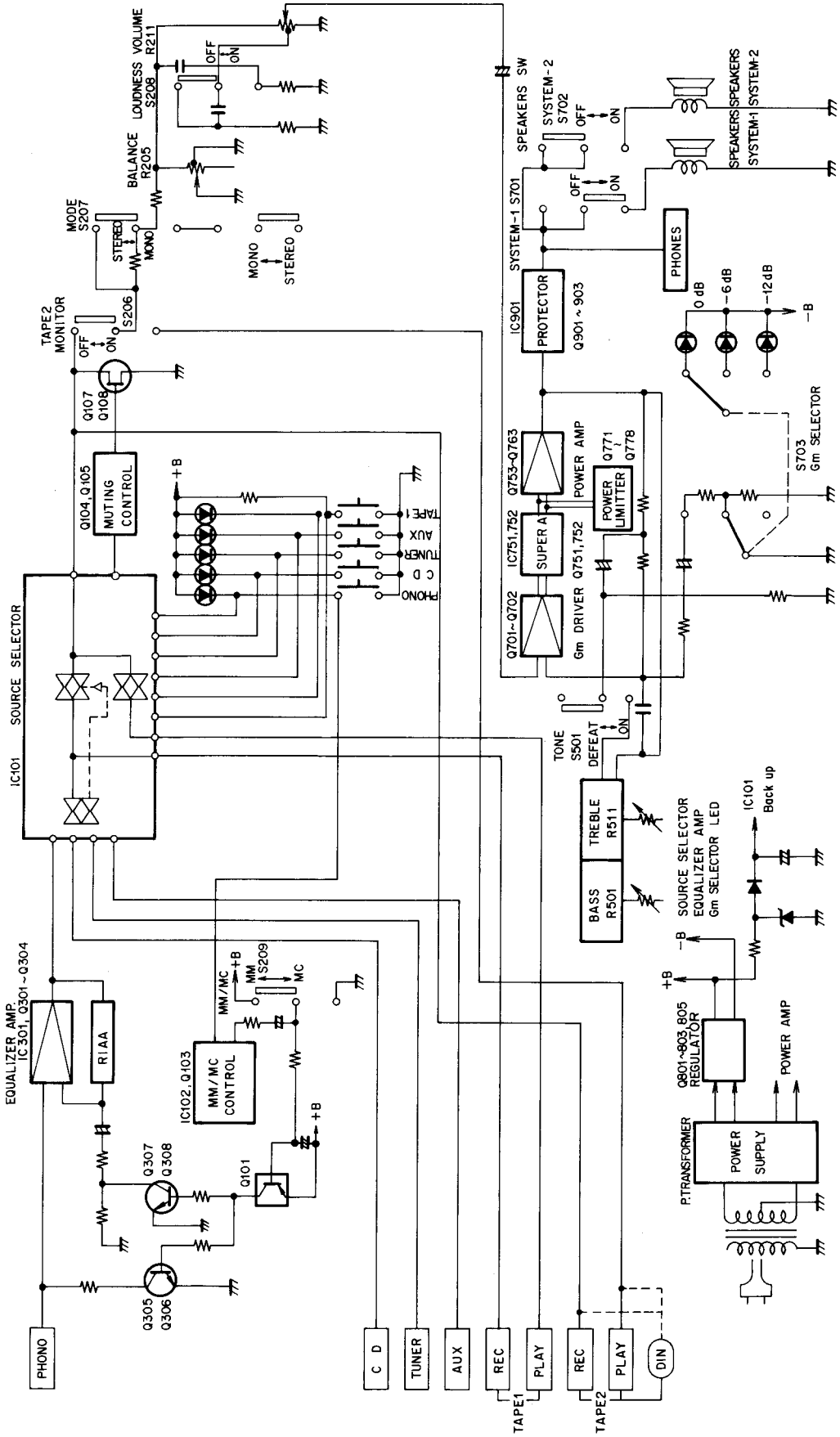

Removal Procedures

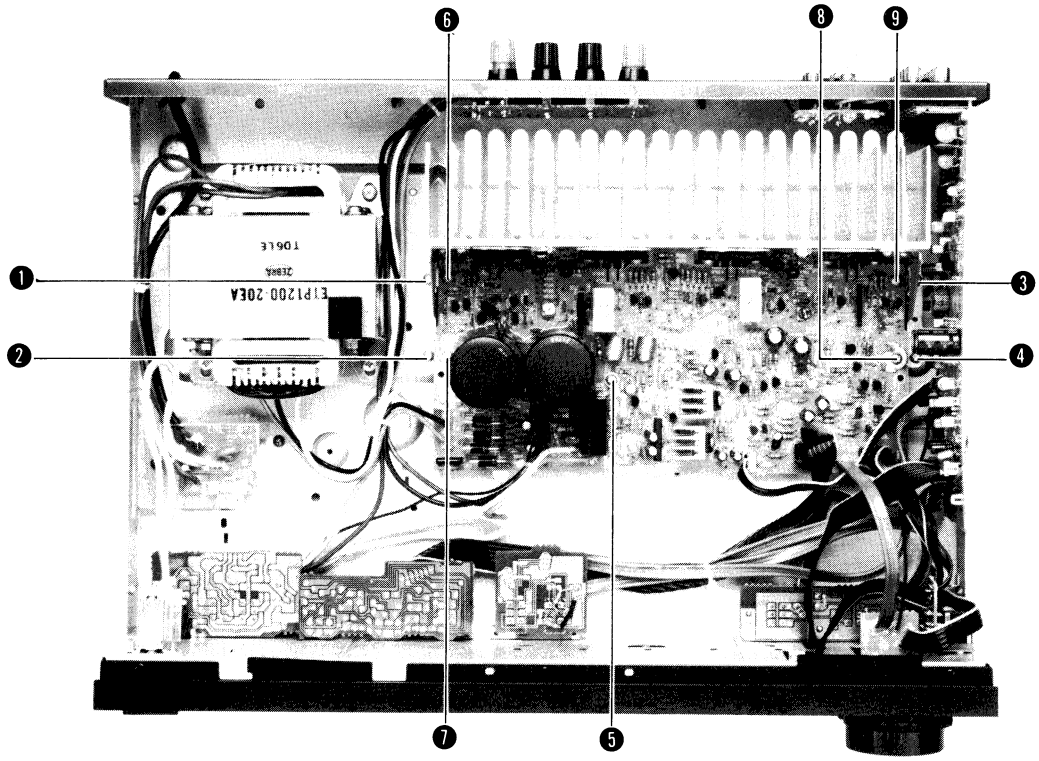

■ Removing the metal cover

1. Remove six screws.
2. Remove the Metal Cover by lifting up its rear section and pulling it backward while holding it on incline.

■ Removing the Front Panel

1. Remove the metal cover.
2. Pull out the volume knob and remove the nut.
3. Remove three plastic rivets on the upper part of the front panel and three screws from the lower part.

■ Precautions when Installing the Front Panel

1. Turn the Gm selector knob on the front panel to the −12 dB position.
2. Rotate the arm clockwise.
3. After completing the above procedures, install the front panel.

■ Precautions when Installing the Arm (Fig. 1)

When the arm is removed for operations such as rotary switch (Gm selector: S703) replacement, reinstall the arm while following the precautions below.

1. Turn the rotary switch shaft counterclockwise all the way.
2. Have the line marking on the top, then insert the arm.

■ Removing the Power Transistors

1. Remove the metal cover.
2. Remove screws ❶ – ❺.
3. Raise the main amp PC board so that the pattern side faces up.
4. Remove solder from the power transistors.
5. Remove screws ❻ – ❾ and remove the heatsinks together with the power transistors.
6. Remove the retaining screw from the defective power transistor and replace it.

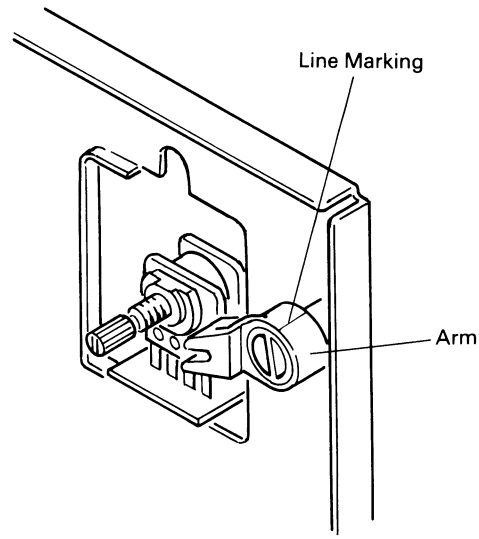

Fig. 1

■ Use of New-type Connector

(1) Slide the cover upward.

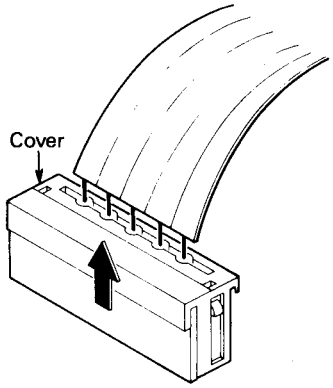

(2) Extract the wires.

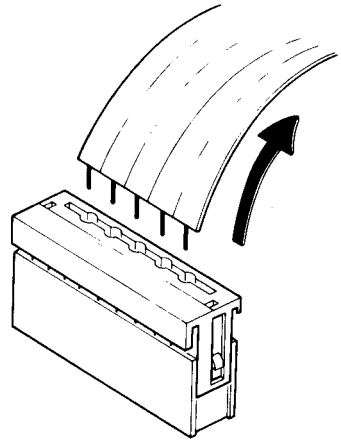

(3) Insert the wires after pushing in the cover.

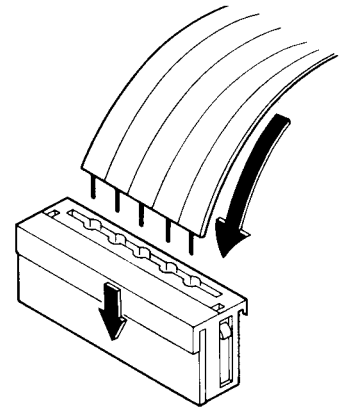

Adjustment Procedures

■ Power Amplifier Idling Adjustment

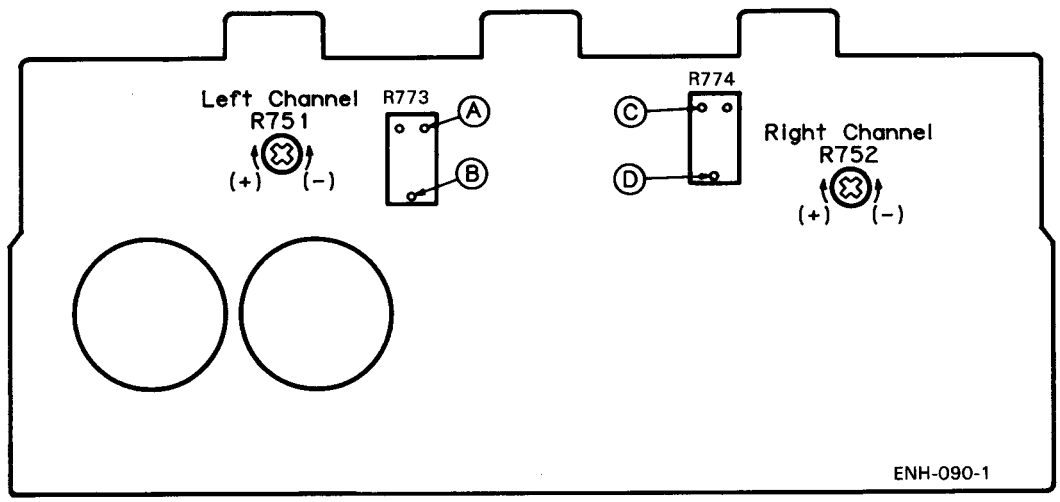

1. Before tuning on the power, turn the semi-fixed resistors (R751 for L channel and R752 for R channel) of the power amplifier circuit board fully counterclockwise.
2. Adjust the semi-fiexed resistor (R751 and R752) so that the voltage at the following test points of the power amplifier circuit board is within a range of 3 ~ 5 mV after the power is turned on.
   L channel: Measure the voltage between test point Ⓐ (emitter of Q761) and output at the test point Ⓑ.
   R channel: Meaure the voltage between test point Ⓒ (emitter of Q762) and output at the test point Ⓓ.
3. Readjust resistors R751 and R752 about 10 minutes after the power is turned on (the heatsink temperature must be sufficiently high) so that the voltage at the test points becomes 11 mV.
   Confirm that the voltage does not vary when the heatsink temperature increases further.
   Note: Be sure to perform the measurement with the probes and cabinet of the measuring equipment separated from the grounding terminals of AX-550BK or other measuring equipment.

Internal Block Diagrams of ICs

■ LC7818 (IC101)

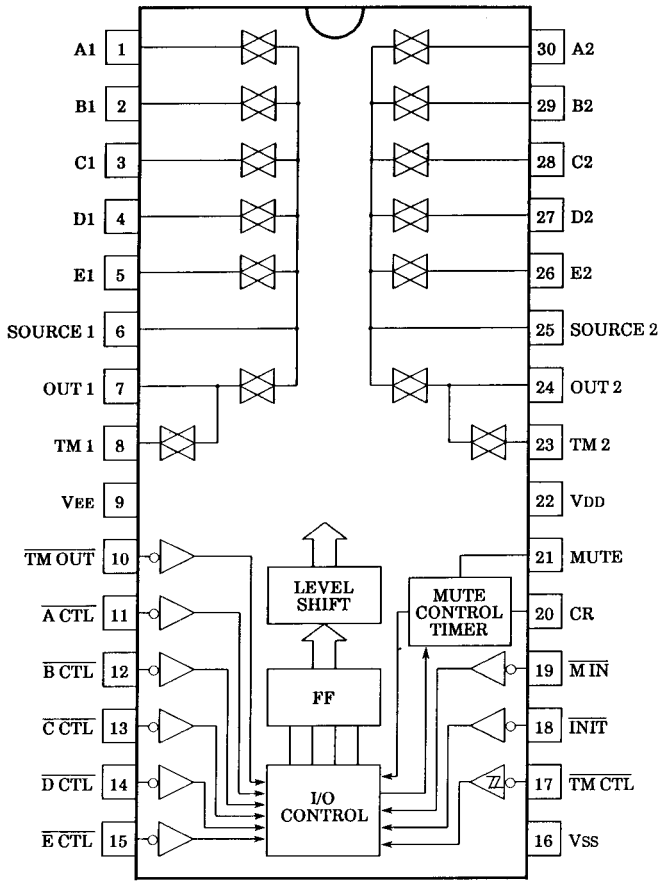

■ M5219P (IC301)

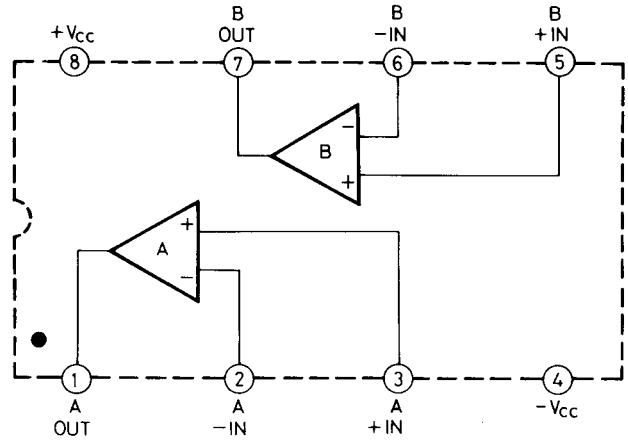

■ VC5022 [X, Y] (IC751, IC752)

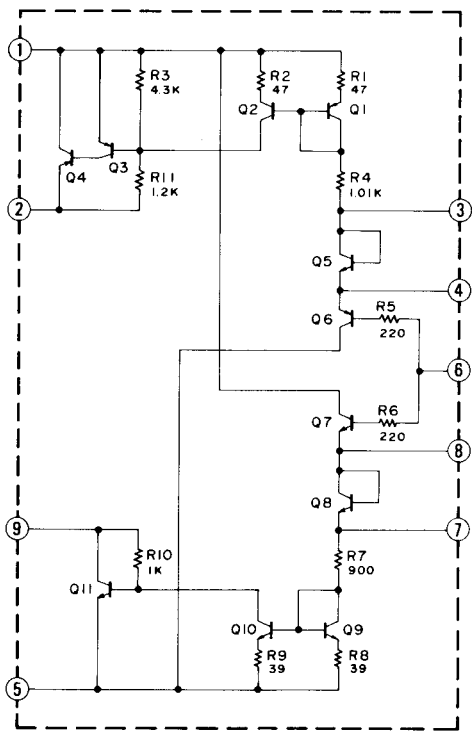

■ TA7317P (IC102, IC901)

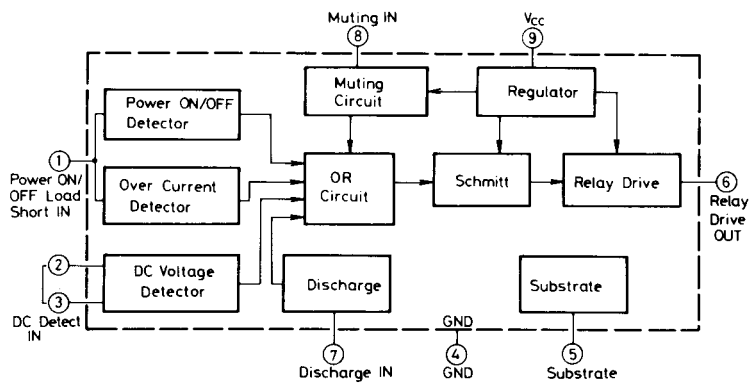

PARTS LIST

Contents

Main Parts Locations 2-2
Exploded View and Parts List 2-3
Printed Circuit Board Ass'y and Parts List 2-6
■ ENH-090 □ Power Amplifier PC Board Ass'y 2-6
■ ENE-034 □ Source Select PC Board Ass'y 2-9
■ TPS-318 [B] Voltage Selector PC Board Ass'y 2-12
Packing Materials and Part Numbers 2-13
Accessories List 2-13

Main Parts Locations

■ Front View

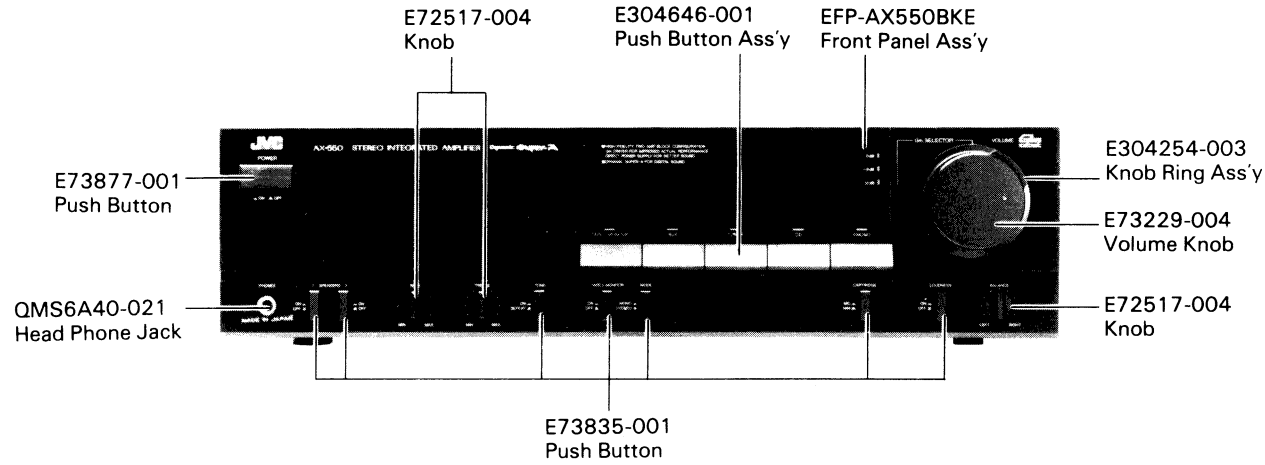

■ Top View

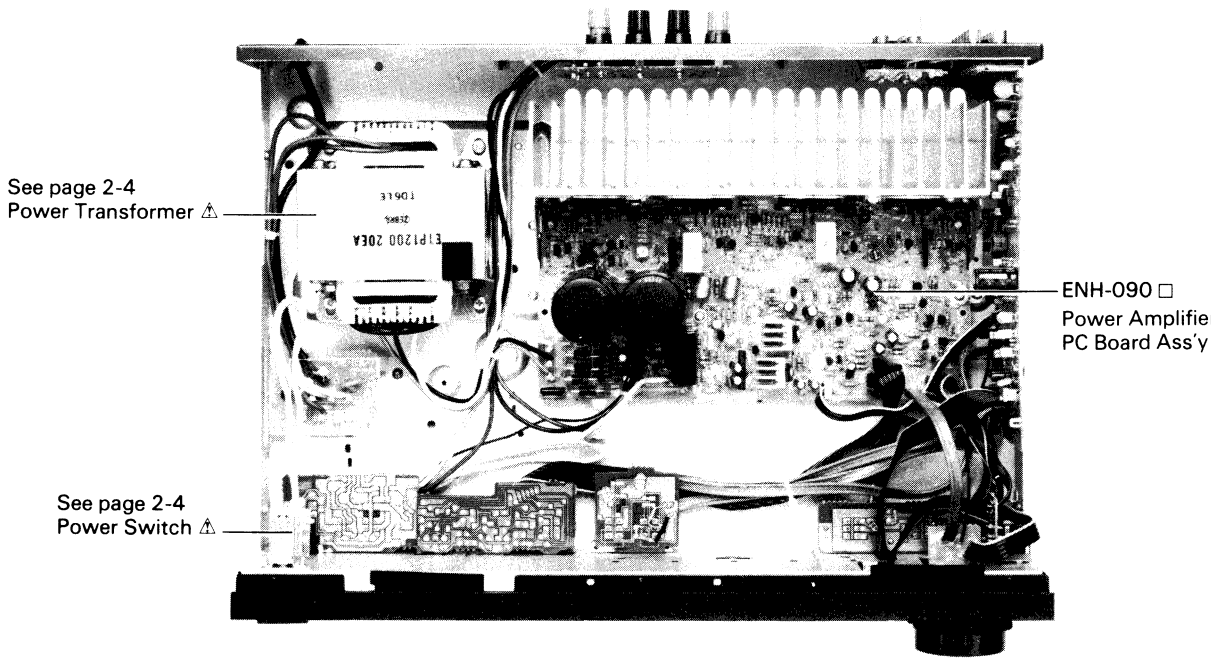

■ Rear View

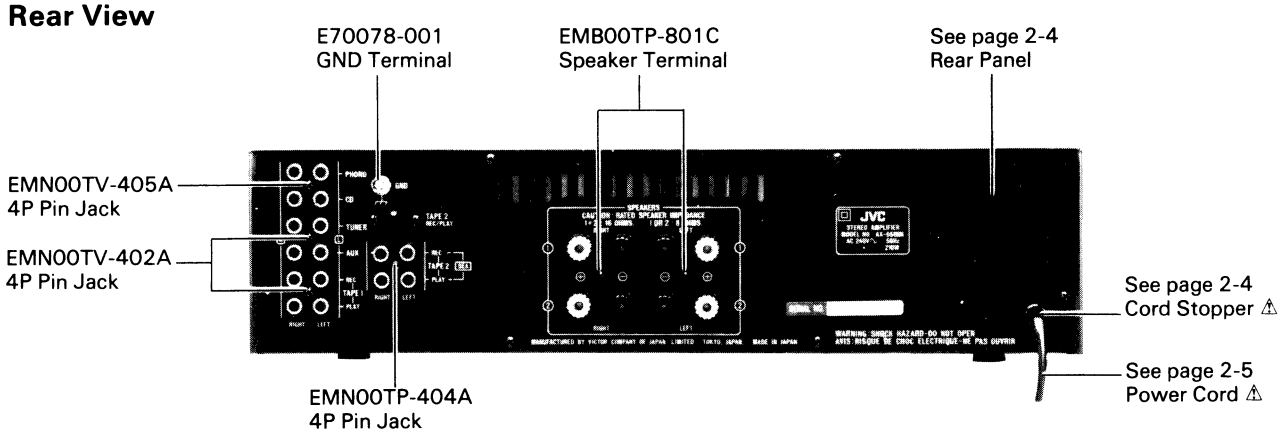

⚠: Safety Parts

Exploded View and Parts List

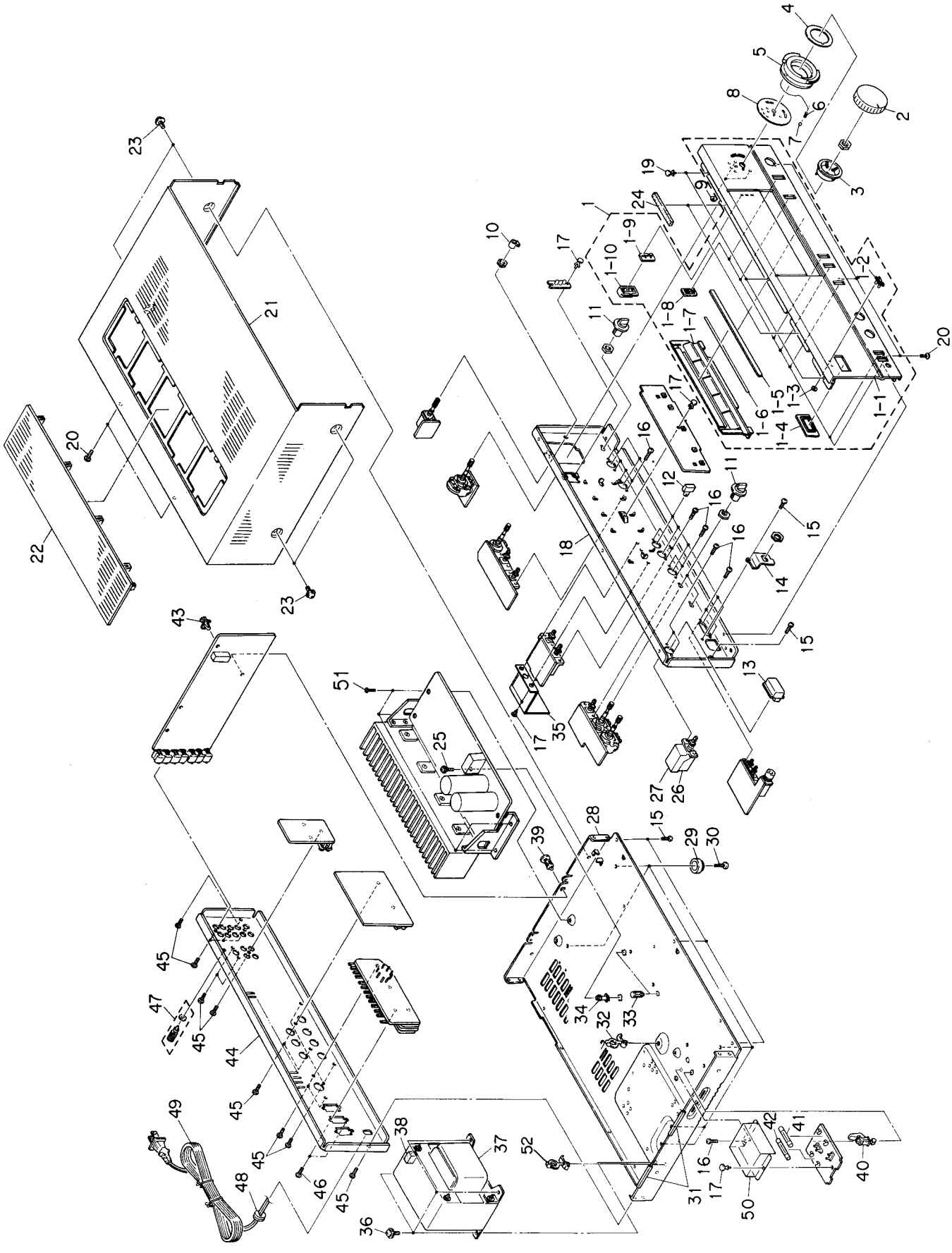

⚠	Item No.	Part Number	Part Name	Q'ty	Description	Areas
	1	EFP-AX550BKE	Front Panel Ass'y	1		
	1-1	E25584-001	Front Panel	1		
	1-2	E72968-001	JVC Mark	1		
	1-3	E60912-003	Speed Nut	1		
	1-4	E73878-001	Push Button Escutcheon	1		
	1-5	E304602-001	IND. Sheet	1		
	1-6	E72437-010	Sheet	1		
	1-7	E304646-001	Push Button Ass'y	1		
	1-8	E73836-001	Push Button Escutcheon	7		
	1-9	E73224-001	Indicator	1		
	1-10	E73225-001	LED Holder	1		
	2	E73229-004	Volume Knob	1		
	3	E304258-002	Knob Bush	1		
	4	E73227-002	Sheet	1		
	5	E304254-003	Knob Ring Ass'y	1		
	6	E66722-036	Coil Spring	1		
	7	E68428-004	Steel Ball	1		
	8	E73226-001	Sheet	1		
	9	E60912-003	Speed Nut	2		
	10	E73228-001	Arm	1		
	11	E72517-004	Knob	3		
	12	E73835-001	Push Button	7		
	13	E73877-001	Push Button	1		
	14	E73218-001	Head Phone Bracket	1		
	15	SBSB3008CC	Screw	6		
	16	SBST3006CC	Screw	13		
	17	E48729-008	Plastic Rivet	5		
	18	E25586-001	Front Bracket	1		
	19	E48729-009	Plastic Rivet	3		
	20	SBSB3008M	Screw	5		
	21	E24719-011	Metal Cover	1		P, PG, A, G, U
		E24742-004	Metal Cover	1		E, BS
	22	E23862-005	Grille	1		E, BS
	23	E61660-004	Special Screw	4		
	24	EXO060007N40S	Spacer	2		
	25	GBSB3008Z	Screw	1		
⚠	26	QSP1106-005	Push Switch	1	Power	P, PG, U, E, A, G
⚠		QSP1106-005BS	Push Switch	1	Power	BS
	27	E71005-001	Switch Cover	1		
	28	E10653-011	Chassis Base	1		
	29	E47227-012	Foot	5		
	30	SBSB3010Z	Screw	5		
	31	E65778-002	Spacer	1		
	32	E303704-001	Wire Clamp	1		
	33	E49383-002	Fastener	2		
	34	E49946-002	Circuit Board Holder	1		
	35	E74074-002	Shield Bracket	1		E, BS
	36	E65389-002	Screw	4		
⚠	37	ETP1200-20FA	Power Transformer	1		P, PG, U
⚠		ETP1200-20EA	Power Transformer	1		E, A, G
⚠		ETP1200-20EABS	Power Transformer	1		BS
	38	E3400-375	Spacer	1		
	39	E303216-003	Fastener	1		
	40	E34455-001	Fastener	1		
⚠	41	QMF51A2-5R0S	Fuse	1	F001	P, PG, U
⚠	42	QMF51A2-3R15S	Fuse	1	F002	P, PG, U
⚠		QMF51A2-3R15S	Fuse	1	F003	E, A, G
⚠		QMF51E2-3R15SBS	Fuse	1	F003	BS
	43	E69384-002	Fastener	1		
	44	E25549-004	Rear Panel	1		P, PG, U

⚠: Safety Parts

⚠	Item No.	Part Number	Part Name	Q'ty	Description	Areas
		E25549-007	Rear Panel	1		E, A, G, BS
	45	E73273-001	Screw	14		
	46	SDSB3008M	Screw	2		P, PG, U
	47	E70078-001	GND Terminal	1		
⚠	48	QHS3876-162	Cord Stopper	1		P, PG, E, A, G, U
⚠		QHS3876-162BS	Cord Stopper	1		BS
⚠	49	QMP2560-244	Power Cord	1		A
⚠		QMP3900-200	Power Cord	1		E, G
⚠		QMP7600-200	Power Cord	1		P, PG, U
⚠		QMP9017-008BS	Power Cord	1		BS
	50	E303823-001	Protector	1		
	51	SBST3006Z	Screw	4		
	52	E303704-001	Wire Clamp	1		P, PG, U
		QHW1052-001	Wire Clamp	1		E, A, G, BS
	—	E303260-097	Rating Label	1		E, G

⚠: Safety Parts

The Marks for Designated Areas

P, PG..... U.S. Military Market
E ..... Europe
A..... Australia
G..... West Germany
BS..... U.K.
U..... Other Countries

No mark indicates all areas.

Printed Circuit Board Ass'y and Parts List

■ ENH-090 □ Power Amplifier PC Board Ass'y

Note: ENH-090 □ Varies according to the areas employed. See note (1) when placing an order.
Note (1)

PC Board Ass'y	Designated Areas
ENH-090 [G]	U.S. Military Market & Other Countries
ENH-090 [H]	Europe, Australia, U.K.
ENH-090 [I]	West Germany

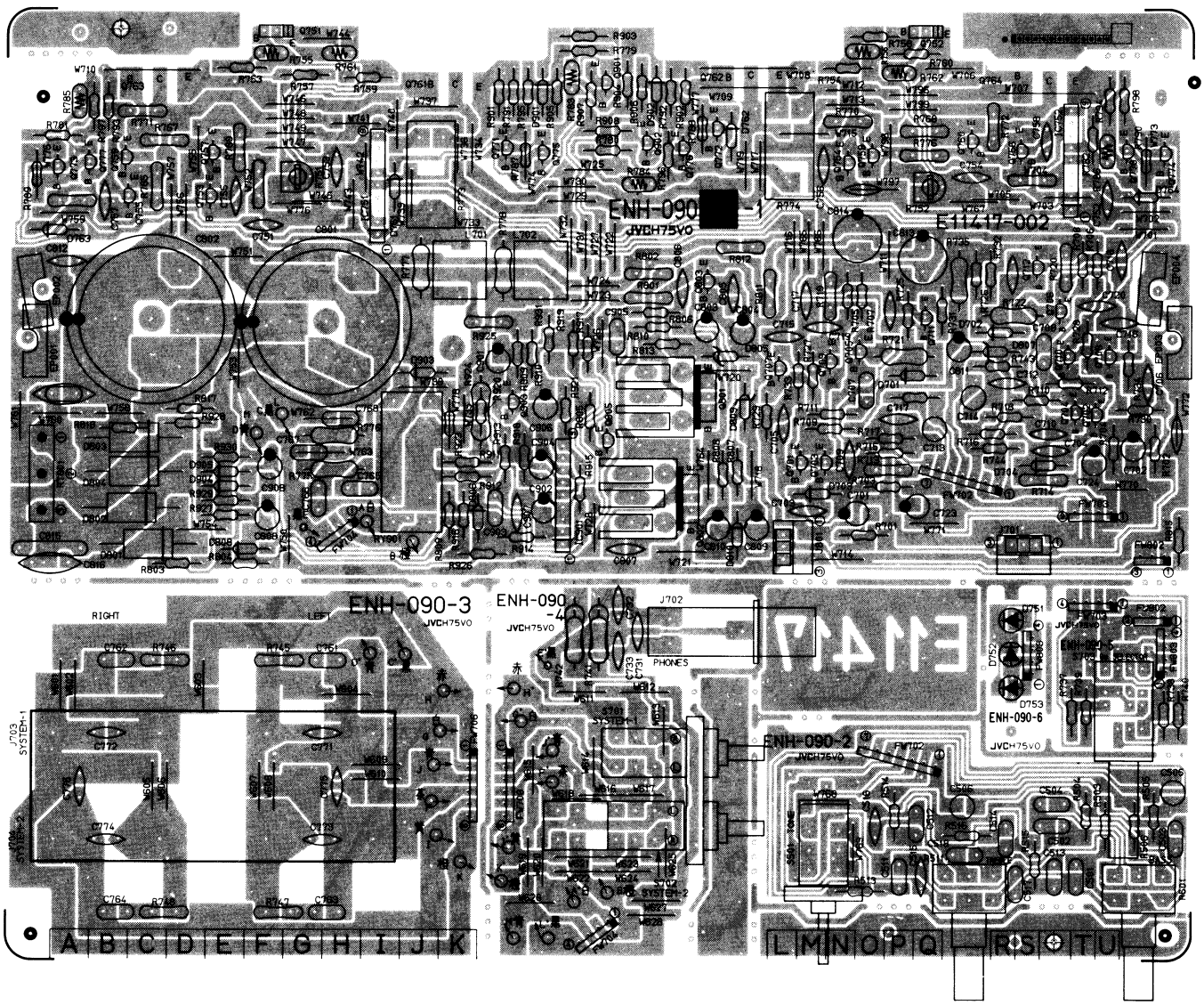

TRANSISTORS

⚠	ITEM	PART NUMBER	DESCRIPTION	MAKER	AREA
	Q701	2SC2240(A,B)	SILICON	TOSHIBA	
	Q702	2SC2240(A,B)	SILICON	TOSHIBA	
	Q703	2SC2240(A,B)	SILICON	TOSHIBA	
	Q704	2SC2240(A,B)	SILICON	TOSHIBA	
	Q705	2SA970(GR,BL)	SILICON	TOSHIBA	
	Q706	2SA970(GR,BL)	SILICON	TOSHIBA	
	Q707	2SA970(GR,BL)	SILICON	TOSHIBA	
	Q708	2SA970(GR,BL)	SILICON	TOSHIBA	
	Q709	2SA933LN(R,S)	SILICON	ROHM	
	Q710	2SA933LN(R,S)	SILICON	ROHM	
	Q711	2SC2240(GR,BL)	SILICON	TOSHIBA	
	Q712	2SC2240(GR,BL)	SILICON	TOSHIBA	
	Q751	2SD636(Q,R)	SILICON	MATSUSHITA	
	Q752	2SD636(Q,R)	SILICON	MATSUSHITA	
	Q753	2SC2240(GR,BL)	SILICON	TOSHIBA	
	Q754	2SC2240(GR,BL)	SILICON	TOSHIBA	
	Q755	2SA970(GR,BL)	SILICON	TOSHIBA	
	Q756	2SA970(GR,BL)	SILICON	TOSHIBA	
	Q757	2SC2235(O,Y)	SILICON	TOSHIBA	
	Q758	2SC2235(O,Y)	SILICON	TOSHIBA	
	Q759	2SA965(O,Y)	SILICON	TOSHIBA	
	Q760	2SA965(O,Y)	SILICON	TOSHIBA	
	Q761	2SD845LB(O,R)	SILICON	TOSHIBA	
	Q762	2SD845LB(O,R)	SILICON	TOSHIBA	
	Q763	2SB755LB(O,R)	SILICON	TOSHIBA	
	Q764	2SB755LB(O,R)	SILICON	TOSHIBA	
	Q771	2SA933(R,S)	SILICON	ROHM	
	Q772	2SA933(R,S)	SILICON	ROHM	
	Q773	2SC1740(R,S)	SILICON	ROHM	
	Q774	2SC1740(R,S)	SILICON	ROHM	
	Q775	2SC1740(R,S)	SILICON	ROHM	
	Q776	2SC1740(R,S)	SILICON	ROHM	
	Q777	2SA933(R,S)	SILICON	ROHM	
	Q778	2SA933(R,S)	SILICON	ROHM	
	Q801	2SD1666(R,S)	SILICON	SANYO	
	Q802	2SB1133(R,S)	SILICON	SANYO	
	Q803	2SA933(R,S)	SILICON	ROHM	
	Q805	2SC1740(R,S)	SILICON	ROHM	
	Q901	2SC2240(GR,BL)	SILICON	TOSHIBA	
	Q902	2SC2240(GR,BL)	SILICON	TOSHIBA	
	Q903	2SA970(GR,BL)	SILICON	TOSHIBA	

I. C. S

⚠	ITEM	PART NUMBER	DESCRIPTION	MAKER	AREA
	IC751	VC5022(X,Y)	I.C.	ROHM	
	IC752	VC5022(X,Y)	I.C.	ROHM	
	IC901	TA7317P	I.C.	TOSHIBA	

DIODES

⚠	ITEM	PART NUMBER	DESCRIPTION	MAKER	AREA
	D701	1S2076-31	SILICON	HITACHI	
	D702	1S2076-31	SILICON	HITACHI	
	D703	1S2076-31	SILICON	HITACHI	
	D704	1S2076-31	SILICON	HITACHI	
	D751	SLH-56DC50F130	L.E.D.	ROHM	
	D752	SLH-56DC50F130	L.E.D.	ROHM	
	D753	SLH-56DC50F130	L.E.D.	ROHM	
	D761	1S2076-31	SILICON	HITACHI	
	D762	1S2076-31	SILICON	HITACHI	
	D763	1S2076-31	SILICON	HITACHI	
	D764	1S2076-31	SILICON	HITACHI	
	D801	30DL2FC	SILICON	NIHONINTER	
	D802	30DL2FC	SILICON	NIHONINTER	
	D803	30DL2FC	SILICON	NIHONINTER	
	D804	30DL2FC	SILICON	NIHONINTER	
	D805	HZ15-1L	SILICON	HITACHI	
	D806	1S2076-31	SILICON	HITACHI	
	D807	RD18EB3	ZENER	NEC	
	D808	1S2076-31	SILICON	HITACHI	
	D809	RD18EB3	ZENER	NEC	

DIODES

⚠	ITEM	PART NUMBER	DESCRIPTION	MAKER	AREA
	D810	RD18EB3	ZENER	NEC	
	D901	1S2076-31	SILICON	HITACHI	
	D902	1S2076-31	SILICON	HITACHI	
	D903	1S2076-31	SILICON	HITACHI	
	D904	1S2076-31	SILICON	HITACHI	
	D905	1S2076-31	SILICON	HITACHI	

CAPACITORS

⚠	ITEM	PART NUMBER	DESCRIPTION			AREA
	C501	QFN81HK-153	0.015MF	50V	MYLAR	
	C502	QFN81HK-153	0.015MF	50V	MYLAR	
	C503	QFN81HK-823	0.082MF	50V	MYLAR	
	C504	QFN81HK-823	0.082MF	50V	MYLAR	
	C505	QEN51HM-475	4.7MF	50V	NON POLE	
	C506	QEN51HM-475	4.7MF	50V	NON POLE	
	C511	QFN81HK-332	3300PF	50V	MYLAR	
	C512	QFN81HK-332	3300PF	50V	MYLAR	
	C513	QFN81HK-183	0.018MF	50V	MYLAR	
	C514	QFN81HK-183	0.018MF	50V	MYLAR	
	C515	QCS21HJ-221	220PF	50V	CERAMIC	
	C516	QCS21HJ-221	220PF	50V	CERAMIC	
	C517	QFN81HK-122	1200PF	50V	MYLAR	
	C518	QFN81HK-122	1200PF	50V	MYLAR	
	C701	EETB2AM-106E	10MF	100V	ELECTRO	
	C702	EETB2AM-106E	10MF	100V	ELECTRO	
	C703	QCS21HJ-470	47PF	50V	CERAMIC	
	C704	QCS21HJ-470	47PF	50V	CERAMIC	
	C705	QCS21HJ-101	100PF	50V	CERAMIC	G
	C705	QCS21HJ-101	100PF	50V	CERAMIC	H
	C705	QCS21HJ-330	33PF	50V	CERAMIC	I
	C706	QCS21HJ-101	100PF	50V	CERAMIC	G
	C706	QCS21HJ-101	100PF	50V	CERAMIC	H
	C706	QCS21HJ-330	33PF	50V	CERAMIC	I
	C707	QFN81HK-332	3300PF	50V	MYLAR	
	C708	QFN81HK-332	3300PF	50V	MYLAR	
	C709	QCS21HJ-100	10PF	50V	CERAMIC	
	C710	QCS21HJ-100	10PF	50V	CERAMIC	
	C713	QEN51HM-475	4.7MF	50V	NON POLE	
	C714	QEN51HM-475	4.7MF	50V	NON POLE	
	C715	QCS21HJ-330	33PF	50V	CERAMIC	
	C716	QCS21HJ-330	33PF	50V	CERAMIC	
	C717	QCS21HJ-330	33PF	50V	CERAMIC	
	C718	QCS21HJ-330	33PF	50V	CERAMIC	
	C719	QCS21HJ-220	22PF	50V	CERAMIC	
	C720	QCS21HJ-220	22PF	50V	CERAMIC	
	C723	QETB1CM-476	47MF	16V	ELECTRO	
	C724	QETB1CM-476	47MF	16V	ELECTRO	
	C731	QCS21HJ-101	100PF	50V	CERAMIC	I
	C732	QCS21HJ-101	100PF	50V	CERAMIC	I
	C733	QCS21HJ-101	100PF	50V	CERAMIC	I
	C751	QCF21HP-103	0.01MF	50V	CERAMIC	
	C752	QCF21HP-103	0.01MF	50V	CERAMIC	
	C753	QCF21HP-103	0.01MF	50V	CERAMIC	
	C754	QCF21HP-103	0.01MF	50V	CERAMIC	
	C755	QCS22HJ-470	47PF	500V	CERAMIC	
	C756	QCS22HJ-470	47PF	500V	CERAMIC	
	C757	QCS22HJ-470	47PF	500V	CERAMIC	
	C758	QCS22HJ-470	47PF	500V	CERAMIC	
	C761	QFN81HK-103	0.01MF	50V	MYLAR	I
	C762	QFN81HK-103	0.01MF	50V	MYLAR	I
	C763	QFN81HK-103	0.01MF	50V	MYLAR	I
	C764	QFN81HK-103	0.01MF	50V	MYLAR	I
	C765	QFN81HK-104	0.1MF	50V	MYLAR	H
	C765	QFN81HK-104	0.1MF	50V	MYLAR	I
	C765	QFN81HK-473	0.047MF	50V	MYLAR	G
	C766	QFN81HK-104	0.1MF	50V	MYLAR	H
	C766	QFN81HK-104	0.1MF	50V	MYLAR	I
	C766	QFN81HK-473	0.047MF	50V	MYLAR	G
	C767	QFN81HK-104	0.1MF	50V	MYLAR	H
	C767	QFN81HK-104	0.1MF	50V	MYLAR	I
	C768	QFN81HK-104	0.1MF	50V	MYLAR	H
	C768	QFN81HK-104	0.1MF	50V	MYLAR	I
	C801	EEZ7101-109E	0.01F	71V	ELECTRO	
	C802	EEZ7101-109E	0.01F	71V	ELECTRO	
	C803	QETB1HM-476	47MF	50V	ELECTRO	
	C804	QETB1HM-476	47MF	50V	ELECTRO	
	C805	QCS21HJ-101	100PF	50V	CERAMIC	
	C808	QETB1HM-105	1MF	50V	ELECTRO	
	C809	QETB1EM-476	47MF	25V	ELECTRO	

⚠ : SAFETY PARTS

CAPACITORS

⚠	ITEM	PART NUMBER	DESCRIPTION			AREA
	C810	QETB1EM-476	47MF	25V	ELECTRO	
	C811	QETB1EM-106	10MF	25V	ELECTRO	
	C812	QFN82AK-472	4700PF	100V	MYLAR	I
	C813	QETB1JM-107	100MF	63V	ELECTRO	
	C814	QETB1JM-107	100MF	63V	ELECTRO	
	C815	QFH42EK-104	0.1MF	250V	M.MYLAR	
	C816	QCE22HP-103A	0.01MF	500V	CERAMIC	
	C817	QFN82AK-472	4700PF	100V	MYLAR	I
	C901	QETB1HM-226	22MF	50V	ELECTRO	
	C902	QETB1AM-107	100MF	10V	ELECTRO	
	C903	QFN81HK-102	1000PF	50V	MYLAR	
	C904	QETB1HM-475	4.7MF	50V	ELECTRO	
	C905	QFN81HK-153	0.015MF	50V	MYLAR	
	C906	QETB1HM-226	22MF	50V	ELECTRO	
	C907	QCF21HP-223	0.022MF	50V	CERAMIC	
	C908	QETB1HM-105	1MF	50V	ELECTRO	

RESISTORS

⚠	ITEM	PART NUMBER	DESCRIPTION			AREA
	R501	QVDB98C-E15B	100K (C)	50mW	VARIABLE	
	R503	QRD148J-203S	20K	1/4W	CARBON	
	R504	QRD148J-203S	20K	1/4W	CARBON	
	R505	QRD148J-362S	3.6K	1/4W	CARBON	
	R506	QRD148J-362S	3.6K	1/4W	CARBON	
	R511	QVDB98C-E15B	100K (C)	50mW	VARIABLE	
	R513	QRD148J-472S	4.7K	1/4W	CARBON	
	R514	QRD148J-472S	4.7K	1/4W	CARBON	
	R515	QRD148J-821S	820	1/4W	CARBON	
	R516	QRD148J-821S	820	1/4W	CARBON	
	R701	QRD148J-222S	2.2K	1/4W	CARBON	
	R702	QRD148J-222S	2.2K	1/4W	CARBON	
	R703	QRD148J-104S	100K	1/4W	CARBON	
	R704	QRD148J-104S	100K	1/4W	CARBON	
	R705	QRD148J-202S	2K	1/4W	CARBON	
	R706	QRD148J-202S	2K	1/4W	CARBON	
	R707	QRD148J-202S	2K	1/4W	CARBON	
	R708	QRD148J-202S	2K	1/4W	CARBON	
	R709	QRD148J-103S	10K	1/4W	CARBON	
	R710	QRD148J-103S	10K	1/4W	CARBON	
	R711	QRD148J-101S	100	1/4W	CARBON	
	R712	QRD148J-101S	100	1/4W	CARBON	
⚠	R713	QRD14CJ-681S	680	1/4W	UNF.CARBON	
⚠	R714	QRD14CJ-681S	680	1/4W	UNF.CARBON	
	R715	QRD148J-163S	16K	1/4W	CARBON	
	R716	QRD148J-163S	16K	1/4W	CARBON	
	R717	QRD148J-823S	82K	1/4W	CARBON	
	R718	QRD148J-823S	82K	1/4W	CARBON	
⚠	R719	QRD14CJ-121S	120	1/4W	UNF.CARBON	
⚠	R720	QRD14CJ-121S	120	1/4W	UNF.CARBON	
⚠	R721	QRD125J-103	10K	1/2W	UNF.CARBON	
⚠	R722	QRD125J-103	10K	1/2W	UNF.CARBON	
	R725	QRD148J-391S	390	1/4W	CARBON	
	R726	QRD148J-391S	390	1/4W	CARBON	
	R727	QRD148J-152S	1.5K	1/4W	CARBON	
	R728	QRD148J-152S	1.5K	1/4W	CARBON	
	R729	QRD148J-333S	33K	1/4W	CARBON	
	R730	QRD148J-333S	33K	1/4W	CARBON	
	R731	QRD148J-391S	390	1/4W	CARBON	
	R732	QRD148J-391S	390	1/4W	CARBON	
	R733	QRD148J-152S	1.5K	1/4W	CARBON	
	R734	QRD148J-152S	1.5K	1/4W	CARBON	
⚠	R735	QRG012J-562AF	5.6K	1W	O.M.FILM	
	R737	QRD148J-162S	1.6K	1/4W	CARBON	
	R738	QRD148J-162S	1.6K	1/4W	CARBON	
	R739	QRD148J-821S	820	1/4W	CARBON	
	R740	QRD148J-821S	820	1/4W	CARBON	
⚠	R741	QRG022J-331A	330	2W	O.M.FILM	
⚠	R742	QRG022J-331A	330	2W	O.M.FILM	
	R743	QRD148J-104S	100K	1/4W	CARBON	
	R744	QRD148J-104S	100K	1/4W	CARBON	
⚠	R745	QRD14CJ-100S	10	1/4W	UNF.CARBON	I
⚠	R746	QRD14CJ-100S	10	1/4W	UNF.CARBON	I
⚠	R747	QRD14CJ-100S	10	1/4W	UNF.CARBON	I
⚠	R748	QRD14CJ-100S	10	1/4W	UNF.CARBON	I
	R751	QVPC604-471	470 (B)	0.1W	VARIABLE	
	R752	QVZ3518-471	470 (B)	0.1W	VARIABLE	
	R753	QRD148J-101S	100	1/4W	CARBON	
	R754	QRD148J-101S	100	1/4W	CARBON	
	R755	ERT-D2WFL351S	350	1/4W	THERMISTER	

RESISTORS

⚠	ITEM	PART NUMBER	DESCRIPTION			AREA
	R756	ERT-D2WFL351S	350	1/4W	THERMISTER	
	R757	QRD148J-471S	470	1/4W	CARBON	
	R758	QRD148J-471S	470	1/4W	CARBON	
	R759	QRD148J-391S	390	1/4W	CARBON	
	R760	QRD148J-391S	390	1/4W	CARBON	
	R761	ERT-D2WHL202S	2K	1/4W	THRMISTOR	
	R762	ERT-D2WHL202S	2K	1/4W	THRMISTOR	
⚠	R765	QRZ0077-272	2.7K	1/4W	FUSIBLE	
⚠	R766	QRZ0077-272	2.7K	1/4W	FUSIBLE	
⚠	R767	QRZ0077-471	470	1/4W	FUSIBLE	
⚠	R768	QRZ0077-471	470	1/4W	FUSIBLE	
⚠	R769	QRZ0077-100	10	1/4W	FUSIBLE	
⚠	R770	QRZ0077-100	10	1/4W	FUSIBLE	
⚠	R771	QRZ0077-100	10	1/4W	FUSIBLE	
⚠	R772	QRZ0077-100	10	1/4W	FUSIBLE	
⚠	R773	ERF032K-R22	0.22	3W	CEMENT	
⚠	R774	ERF032K-R22	0.22	3W	CEMENT	
⚠	R775	QRG012J-100A	10	1W	O.M.FILM	
⚠	R776	QRG012J-100A	10	1W	O.M.FILM	
⚠	R777	QRD125J-330	33	1/2W	UNF.CARBON	
⚠	R778	QRD125J-330	33	1/2W	UNF.CARBON	
	R779	QRD148J-331S	330	1/4W	CARBON	
	R780	QRD148J-331S	330	1/4W	CARBON	
	R781	QRD148J-331S	330	1/4W	CARBON	
	R782	QRD148J-331S	330	1/4W	CARBON	
	R783	ERT-D2WFL351S	350	1/4W	THERMISTER	
	R784	ERT-D2WFL351S	350	1/4W	THERMISTER	
	R785	ERT-D2WFL351S	350	1/4W	THERMISTER	
	R786	ERT-D2WFL351S	350	1/4W	THERMISTER	
	R787	QRD148J-103S	10K	1/4W	CARBON	
	R788	QRD148J-103S	10K	1/4W	CARBON	
	R789	QRD148J-103S	10K	1/4W	CARBON	
	R790	QRD148J-103S	10K	1/4W	CARBON	
	R791	QRD148J-331S	330	1/4W	CARBON	
	R792	QRD148J-331S	330	1/4W	CARBON	
	R793	QRD148J-331S	330	1/4W	CARBON	
	R794	QRD148J-331S	330	1/4W	CARBON	
	R795	QRD148J-221S	220	1/4W	CARBON	
	R796	QRD148J-221S	220	1/4W	CARBON	
	R797	QRD148J-221S	220	1/4W	CARBON	
	R798	QRD148J-221S	220	1/4W	CARBON	
⚠	R801	QRZ0077-330	33	1/4W	FUSIBLE	
⚠	R802	QRZ0077-330	33	1/4W	FUSIBLE	
	R803	QRD148J-123S	12K	1/4W	CARBON	
	R804	QRD148J-682S	6.8K	1/4W	CARBON	
	R805	QRD148J-823S	82K	1/4W	CARBON	
	R806	QRD148J-221S	220	1/4W	CARBON	
	R807	QRD148J-223S	22K	1/4W	CARBON	
	R808	QRD148J-203S	20K	1/4W	CARBON	
	R809	QRD148J-563S	56K	1/4W	CARBON	
	R810	QRD148J-123S	12K	1/4W	CARBON	
⚠	R811	QRZ0077-330	33	1/4W	FUSIBLE	
⚠	R812	QRZ0077-330	33	1/4W	FUSIBLE	
	R813	QRD148J-123S	12K	1/4W	CARBON	
	R815	QRD148J-102S	1K	1/4W	CARBON	
	R817	QRD148J-104S	100K	1/4W	CARBON	
	R818	QRD148J-104S	100K	1/4W	CARBON	
	R901	QRD148J-272S	2.7K	1/4W	CARBON	
	R902	QRD148J-272S	2.7K	1/4W	CARBON	
	R903	QRD148J-183S	18K	1/4W	CARBON	
	R904	QRD148J-183S	18K	1/4W	CARBON	
	R905	QRD148J-472S	4.7K	1/4W	CARBON	
	R906	QRD148J-472S	4.7K	1/4W	CARBON	
	R907	QRD148J-223S	22K	1/4W	CARBON	
	R908	QRD148J-223S	22K	1/4W	CARBON	
	R909	QRD148J-332S	3.3K	1/4W	CARBON	
	R910	QRD148J-103S	10K	1/4W	CARBON	
	R911	QRD148J-104S	100K	1/4W	CARBON	
	R912	QRD148J-823S	82K	1/4W	CARBON	
	R913	QRD148J-473S	47K	1/4W	CARBON	
	R914	QRD148J-104S	100K	1/4W	CARBON	
	R915	QRD148J-683S	68K	1/4W	CARBON	
	R916	QRD148J-683S	68K	1/4W	CARBON	
	R917	QRD148J-203S	20K	1/4W	CARBON	
	R918	QRD148J-392S	3.9K	1/4W	CARBON	
	R919	QRD148J-333S	33K	1/4W	CARBON	
	R921	QRD148J-224S	220K	1/4W	CARBON	
	R923	QRD148J-820S	82	1/4W	CARBON	
⚠	R924	QRG022J-152A	1.5K	2W	O.M.FILM	
⚠	R925	QRD14CJ-470S	47	1/4W	UNF.CARBON	
	R926	QRD148J-822S	8.2K	1/4W	CARBON	
	R927	QRD148J-123S	12K	1/4W	CARBON	
	R928	QRD148J-123S	12K	1/4W	CARBON	
	R929	QRD148J-682S	6.8K	1/4W	CARBON	
	R930	QRD148J-682S	6.8K	1/4W	CARBON	
	R931	QRD148J-303S	30K	1/4W	CARBON	

⚠ : SAFETY PARTS

OTHERS

⚠	ITEM	PART NUMBER	DESCRIPTION	AREA
		E11417-002	CIRCUIT BOARD	
		E300107-005	CIRCUIT BOARD HOLDER	
		E300107-006	CIRCUIT BOARD HOLDER	
		E300209-021	HEAT SINK	
		E70945-H25	HEAT SINK	
		E73265-001	SPCL SCREW	
		GBSB3008CC	SCREW	
		SBSB3008CC	T.SCREW	
		SBSB3008CC	T.SCREW	
		SBSE3012CC	SCREW	
	J701	EMV7112-003	SOCKET	
	J702	QMS6A40-021	JACK ASSY	
	J703	EMB00TP-801C	SPEAKER TERMINAL	
	J704	EMB00TP-801C	SPEAKER TERMINAL	
	J801	EMV7112-003	SOCKET	
	L701	EQL0001-1R0	INDUCTOR	
	L702	EQL0001-1R0	INDUCTOR	
	S501	QST4102-E08	PUSH SWITCH	
	S701	QST4241-E06	PUSH SWITCH	
	S702	QST4241-E06	PUSH SWITCH	

OTHERS

⚠	ITEM	PART NUMBER	DESCRIPTION	AREA
⚠	S703	QSR6223-201	VOLTAGE SELECTOR	
	EP002	E70859-001	EARTH PLATE	I
	EP004	E70859-001	EARTH PLATE	G
	EP004	E70859-001	EARTH PLATE	H
	EP004	E70859-001	EARTH PLATE	I
	RT801	E67764-103	R.TERMINAL	
	RY901	ESK5D24-218	RELAY	

⚠ : SAFETY PARTS

■ ENC-034 □ Source Select PC Board Ass'y

Note: ENC-034 □ Varies according to the areas employed. See note (1) when placing an order.

Note (1)

PC Board Ass'y	Designated Areas
ENE-034 [E]	U.S. Military Market & Other Countries
ENE-034 [F]	Europe, Australia
ENE-034 [G]	West Germany
ENE-034 [H] BS	U.K.

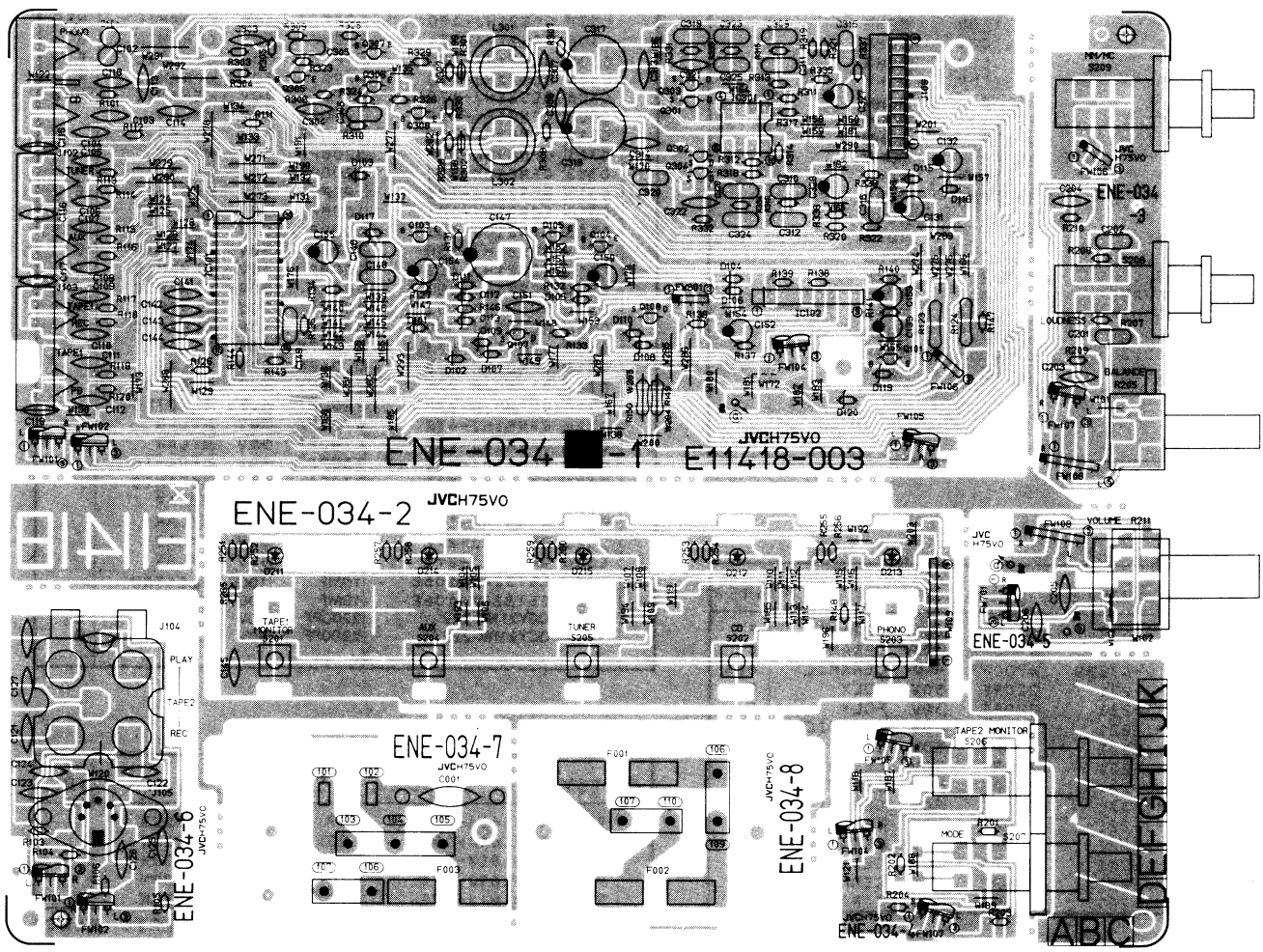

TRANSISTORS

⚠	ITEM	PART NUMBER	DESCRIPTION	MAKER	AREA
	Q101	DTA144EN	SILICON	ROHM	
	Q103	2SC2389(S,E)	SILICON	ROHM	
	Q104	DTC144EN	SILICON	ROHM	
	Q105	DTA144EN	SILICON	ROHM	
	Q107	2SK163(L1)	F.E.T	NEC	
	Q108	2SK163(L1)	F.E.T	NEC	
	Q301	2SK170(BL)	F.E.T	TOSHIBA	
	Q302	2SK170(BL)	F.E.T	TOSHIBA	
	Q303	2SK170(BL)	F.E.T	TOSHIBA	
	Q304	2SK170(BL)	F.E.T	TOSHIBA	
	Q305	2SD655(E,F)	SILICON	HITACHI	
	Q306	2SD655(E,F)	SILICON	HITACHI	
	Q307	2SD655(E,F)	SILICON	HITACHI	
	Q308	2SD655(E,F)	SILICON	HITACHI	

I. C. S

⚠	ITEM	PART NUMBER	DESCRIPTION	MAKER	AREA
	IC101	LC7818	I.C.	SANYO	
	IC102	TA7317P	I.C.	TOSHIBA	
	IC301	M5219P	I.C.	MITSUBISHI	

DIODES

⚠	ITEM	PART NUMBER	DESCRIPTION	MAKER	AREA
	D101	1SS133	SILICON	ROHM	
	D102	1SS133	SILICON	ROHM	
	D103	1SS133	SILICON	ROHM	
	D104	1SS133	SILICON	ROHM	
	D105	1SS133	SILICON	ROHM	
	D106	1SS133	SILICON	ROHM	
	D107	MTZ15JC	ZENER	**ROHM**	
	D108	MTZ15JC	ZENER	**ROHM**	
	D109	MTZ15JC	ZENER	**ROHM**	
	D110	MTZ15JC	ZENER	**ROHM**	
	D111	1SS133	SILICON	ROHM	
	D112	1SS133	SILICON	ROHM	
	D113	MTZ5.6JC	ZENER	ROHM	
	D115	MTZ13JC	ZENER	ROHM	
	D116	MTZ13JC	ZENER	ROHM	
	D117	MTZ6.8JC	ZENER	ROHM	
	D211	SLR-34VR3F	L.E.D.	ROHM	
	D212	SLR-34DU3F	L.E.D.	ROHM	
	D213	SLR-34DU3F	L.E.D.	ROHM	
	D214	SLR-34DU3F	L.E.D.	ROHM	
	D215	SLR-34DU3F	L.E.D.	ROHM	

CAPACITORS

⚠	ITEM	PART NUMBER	DESCRIPTION			AREA
	C001	QCZ9019-472	4700PF	**400V**	CERAMIC	F
	C001	QCZ9019-472	4700PF	**400V**	CERAMIC	G
	C001	QCZ9019-472BS	4700PF	**400V**	CERAMIC	HBS
	C101	QFS81HJ-221	220PF	50V	POLY	G
	C102	QFS81HJ-221	220PF	50V	POLY	G
	C103	QCS21HJ-221	220PF	50V	CERAMIC	G
	C104	QCS21HJ-221	220PF	50V	CERAMIC	G
	C105	QCS21HJ-221	220PF	50V	CERAMIC	G
	C106	QCS21HJ-221	220PF	50V	CERAMIC	G
	C107	QCS21HJ-221	220PF	50V	CERAMIC	G
	C108	QCS21HJ-221	220PF	50V	CERAMIC	G
	C109	QCS21HJ-221	220PF	50V	CERAMIC	G
	C110	QCS21HJ-221	220PF	50V	CERAMIC	G
	C111	QCS21HJ-221	220PF	50V	CERAMIC	G
	C112	QCS21HJ-221	220PF	50V	CERAMIC	G

CAPACITORS

⚠	ITEM	PART NUMBER	DESCRIPTION			AREA
	C113	QCF21HP-473	0.047MF	50V	CERAMIC	
	C114	QCF21HP-223	0.022MF	50V	CERAMIC	
	C115	QCF21HP-223	0.022MF	50V	CERAMIC	
	C116	QCF21HP-223	0.022MF	50V	CERAMIC	
	C117	QCF21HP-223	0.022MF	50V	CERAMIC	
	C118	QCF21HP-473	0.047MF	50V	CERAMIC	
	C119	QCF21HP-223	0.022MF	50V	CERAMIC	
	C121	**QCS21HJ-221**	**220PF**	**50V**	**CERAMIC**	**G**
	C122	**QCS21HJ-221**	**220PF**	**50V**	**CERAMIC**	**G**
	C125	QCS21HJ-221	220PF	50V	CERAMIC	G
	C126	QCS21HJ-221	220PF	50V	CERAMIC	G
	C127	QCF21HP-223	0.022MF	50V	CERAMIC	
	C131	QETB1EM-107	100MF	25V	ELECTRO	
	C132	QETB1EM-107	100MF	25V	ELECTRO	
	C133	QETB1HM-475	4.7MF	50V	ELECTRO	
	C146	QFN81HJ-562	5600PF	50V	MYLAR	
	C147	EEZ0502-479	**0.047F**	**5.5V**	ELECTRO	
	C148	QFN81HJ-562	5600PF	50V	MYLAR	
	C149	QFN81HK-473	0.047MF	50V	MYLAR	
	C150	QETB1HM-225	2.2MF	50V	ELECTRO	
	C151	QCS21HJ-331	330PF	50V	CERAMIC	
	C152	QETB1CM-226	22MF	16V	ELECTRO	
	C153	QETB1HM-475	4.7MF	50V	ELECTRO	
	C154	QETB1CM-107	100MF	16V	ELECTRO	
	C155	QETB1HM-474	0.47MF	50V	ELECTRO	
	C159	**QCS21HJ-101**	**100PF**	**50V**	**CERAMIC**	**G**
	C160	**QCS21HJ-101**	**100PF**	**50V**	**CERAMIC**	**G**
	C161	**QCS21HJ-221**	**220PF**	**50V**	**CERAMIC**	**G**
	C162	**QCS21HJ-221**	**220PF**	**50V**	**CERAMIC**	**G**
	C201	QFN81HK-333	0.033MF	50V	MYLAR	
	C202	QFN81HK-333	0.033MF	50V	MYLAR	
	C203	QCS21HJ-181	180PF	50V	CERAMIC	
	C204	QCS21HJ-181	180PF	50V	CERAMIC	
	C205	QCS21HJ-470	47PF	50V	CERAMIC	G
	C206	QCS21HJ-470	47PF	50V	CERAMIC	G
	C303	QCS21HJ-151	150PF	50V	CERAMIC	
	C304	QCS21HJ-151	150PF	50V	CERAMIC	
	C305	QFN81HK-103	0.01MF	50V	MYLAR	
	C306	QFN81HK-103	0.01MF	50V	MYLAR	
	C307	QCS21HJ-331	330PF	50V	CERAMIC	G
	C307	QCS21HJ-470	47PF	50V	CERAMIC	E
	C307	QCS21HJ-470	47PF	50V	CERAMIC	F
	C307	QCS21HJ-470	47PF	50V	CERAMIC	HBS
	C308	QCS21HJ-331	330PF	50V	CERAMIC	G
	C308	QCS21HJ-470	47PF	50V	CERAMIC	E
	C308	QCS21HJ-470	47PF	50V	CERAMIC	F
	C308	QCS21HJ-470	47PF	50V	CERAMIC	HBS
	C309	QFN81HK-392	3900PF	50V	MYLAR	
	C310	QFN81HK-392	3900PF	50V	MYLAR	
	C311	QFN81HK-822	8200PF	50V	MYLAR	
	C312	QFN81HK-822	8200PF	50V	MYLAR	
	C313	QCS21HJ-101	100PF	50V	CERAMIC	E
	C313	QCS21HJ-101	100PF	50V	CERAMIC	F
	C313	QCS21HJ-101	100PF	50V	CERAMIC	HBS
	C313	QCS21HJ-330	33PF	50V	CERAMIC	G
	C314	QCS21HJ-101	100PF	50V	CERAMIC	E
	C314	QCS21HJ-101	100PF	50V	CERAMIC	F
	C314	QCS21HJ-101	100PF	50V	CERAMIC	HBS
	C314	QCS21HJ-330	33PF	50V	CERAMIC	G
	C315	QFN81HK-473	0.047MF	50V	MYLAR	
	C316	QFN81HK-473	0.047MF	50V	MYLAR	
	C317	QETB0JM-228	2200MF	6.3V	ELECTRO	
	C318	QETB0JM-228	2200MF	6.3V	ELECTRO	
	C319	QFN81HJ-472	4700PF	50V	MYLAR	
	C320	QFN81HJ-472	4700PF	50V	MYLAR	
	C321	QCS21HJ-331	330PF	50V	CERAMIC	
	C322	QCS21HJ-331	330PF	50V	CERAMIC	
	C323	QFN81HJ-153	0.015MF	50V	MYLAR	
	C324	QFN81HJ-153	0.015MF	50V	MYLAR	
	C325	QFN81HJ-272	2700PF	50V	MYLAR	
	C326	QFN81HJ-272	2700PF	50V	MYLAR	
	C327	EETB2AM-106E	**10MF**	**100V**	ELECTRO	
	C328	EETB2AM-106E	**10MF**	**100V**	ELECTRO	
	C331	**QCY21HK-222**	**2200PF**	**50V**	**CERAMIC**	**G**
	C332	**QCY21HK-222**	**2200PF**	**50V**	**CERAMIC**	**G**

RESISTORS

⚠	ITEM	PART NUMBER	DESCRIPTION			AREA
	R101	QRD161J-4R7	4.7	1/6W	CARBON	
	R103	QRD161J-104	100K	1/6W	CARBON	
	R104	QRD161J-104	100K	1/6W	CARBON	
	R105	QRD161J-471	470	1/6W	CARBON	
	R106	QRD161J-471	470	1/6W	CARBON	

⚠ : SAFETY PARTS

RESISTORS

⚠	ITEM	PART NUMBER	DESCRIPTION			AREA
	R111	QRD161J-471	470	1/6W	CARBON	
	R112	QRD161J-471	470	1/6W	CARBON	
	R113	QRD161J-471	470	1/6W	CARBON	
	R114	QRD161J-471	470	1/6W	CARBON	
	R115	QRD161J-471	470	1/6W	CARBON	
	R116	QRD161J-471	470	1/6W	CARBON	
	R117	QRD161J-471	470	1/6W	CARBON	E
	R117	**QRD161J-471**	**470**	**1/6W**	**CARBON**	**F**
	R117	**QRD161J-471**	**470**	**1/6W**	**CARBON**	**HBS**
	R117	**QRD161J-182**	**1.8K**	**1/6W**	**CARBON**	**G**
	R118	QRD161J-471	470	1/6W	CARBON	E
	R118	**QRD161J-471**	**470**	**1/6W**	**CARBON**	**F**
	R118	**QRD161J-471**	**470**	**1/6W**	**CARBON**	**HBS**
	R118	**QRD161J-182**	**1.8K**	**1/6W**	**CARBON**	**C**
	R119	QRD161J-471	470	1/6W	CARBON	
	R120	QRD161J-471	470	1/6W	CARBON	
⚠	R123	QRZ0077-101	100	1/4W	FUSIBLE	
⚠	R124	QRZ0077-101	100	1/4W	FUSIBLE	
	R126	QRD161J-104	100K	1/6W	CARBON	
	R127	QRD161J-104	100K	1/6W	CARBON	
	R131	QRD161J-103	10K	1/6W	CARBON	
	R132	QRD161J-103	10K	1/6W	CARBON	
	R133	QRD161J-105	1M	1/6W	CARBON	
	R134	QRD161J-103	10K	1/6W	CARBON	
	R135	QRD161J-474	470K	1/6W	CARBON	
	R136	QRD161J-562	5.6K	1/6W	CARBON	
	R137	QRD161J-473	47K	1/6W	CARBON	
	R138	QRD161J-392	3.9K	1/6W	CARBON	
	R139	QRD161J-104	100K	1/6W	CARBON	
	R140	QRD161J-104	100K	1/6W	CARBON	
	R141	QRD161J-223	22K	1/6W	CARBON	
	R143	QRD161J-102	1K	1/6W	CARBON	
	R144	QRD161J-102	1K	1/6W	CARBON	
	R146	QRD161J-122	1.2K	1/6W	CARBON	
	R147	QRD161J-473	47K	1/6W	CARBON	
	R148	QRD161J-273	27K	1/6W	CARBON	
	R149	**QRD148J-182S**	**1.8K**	**1/4W**	**CARBON**	
	R150	**QRD148J-182S**	**1.8K**	**1/4W**	**CARBON**	
	R201	QRD161J-562	5.6K	1/6W	CARBON	
	R202	QRD161J-562	5.6K	1/6W	CARBON	
	R203	QRD161J-472	4.7K	1/6W	CARBON	
	R204	QRD161J-472	4.7K	1/6W	CARBON	
	R205	QVDA98W-EF5B			VARIABLE	
	R207	QRD161J-223	22K	1/6W	CARBON	
	R208	QRD161J-223	22K	1/6W	CARBON	
	R209	QRD161J-105	1M	1/6W	CARBON	
	R210	QRD161J-105	1M	1/6W	CARBON	
	R211	QVDB98B-EF5C			VARIABLE	
	R251	QRD161J-122	1.2K	1/6W	CARBON	
	R252	QRD161J-122	1.2K	1/6W	CARBON	
	R253	QRD161J-122	1.2K	1/6W	CARBON	
	R254	QRD161J-122	1.2K	1/6W	CARBON	
	R255	QRD161J-122	1.2K	1/6W	CARBON	
	R256	QRD161J-122	1.2K	1/6W	CARBON	
	R257	QRD161J-122	1.2K	1/6W	CARBON	
	R258	QRD161J-122	1.2K	1/6W	CARBON	
	R259	QRD161J-122	1.2K	1/6W	CARBON	
	R260	QRD161J-122	1.2K	1/6W	CARBON	
	R265	QRD161J-104	100K	1/6W	CARBON	
	R301	QRD161J-102	1K	1/6W	CARBON	G
	R302	QRD161J-102	1K	1/6W	CARBON	G
	R303	QRD161J-473	47K	1/6W	CARBON	
	R304	QRD161J-473	47K	1/6W	CARBON	
	R305	QRD161J-471	470	1/6W	CARBON	
	R306	QRD161J-471	470	1/6W	CARBON	
	R307	QRD161J-5R6	5.6	1/6W	CARBON	
	R308	QRD161J-5R6	5.6	1/6W	CARBON	
	R309	QRD161J-101	100	1/6W	CARBON	
	R310	QRD161J-101	100	1/6W	CARBON	
	R311	QRD161J-562	5.6K	1/6W	CARBON	
	R312	QRD161J-562	5.6K	1/6W	CARBON	
	R313	QRD161J-270	27	1/6W	CARBON	
	R314	QRD161J-270	27	1/6W	CARBON	
	R315	QRD161J-561	560	1/6W	CARBON	
	R316	QRD161J-561	560	1/6W	CARBON	
	R317	QRD161J-562	5.6K	1/6W	CARBON	
	R318	QRD161J-562	5.6K	1/6W	CARBON	
	R319	QRD161J-222	2.2K	1/6W	CARBON	
	R320	QRD161J-222	2.2K	1/6W	CARBON	
	R321	QRD161J-272	2.7K	1/6W	CARBON	
	R322	QRD161J-272	2.7K	1/6W	CARBON	
	R323	QRD161J-273	27K	1/6W	CARBON	
	R324	QRD161J-273	27K	1/6W	CARBON	
	R325	QRD161J-273	27K	1/6W	CARBON	
	R326	QRD161J-273	27K	1/6W	CARBON	
	R327	QRD161J-150	15	1/6W	CARBON	G
	R327	QRD161J-180	18	1/6W	CARBON	E
	R327	QRD161J-180	18	1/6W	CARBON	F

RESISTORS

⚠	ITEM	PART NUMBER	DESCRIPTION			AREA
	R327	QRD161J-180	18	1/6W	CARBON	HBS
	R328	QRD161J-150	15	1/6W	CARBON	G
	R328	QRD161J-180	18	1/6W	CARBON	E
	R328	QRD161J-180	18	1/6W	CARBON	F
	R328	QRD161J-180	18	1/6W	CARBON	HBS
	R329	QRD161J-221	220	1/6W	CARBON	
	R330	QRD161J-221	220	1/6W	CARBON	
	R331	QRD161J-153	15K	1/6W	CARBON	
	R332	QRD161J-153	15K	1/6W	CARBON	
	R333	QRD161J-184	180K	1/6W	CARBON	
	R334	QRD161J-184	180K	1/6W	CARBON	
	R335	QRD161J-331	330	1/6W	CARBON	
	R336	QRD161J-331	330	1/6W	CARBON	
	R337	QRD161J-104	100K	1/6W	CARBON	
	R338	QRD161J-104	100K	1/6W	CARBON	

OTHERS

⚠	ITEM	PART NUMBER	DESCRIPTION	AREA
		EMG7331-001	FUSE CLIP	
		ENZ2006-001	SHIELD CASE	G
		E03532-001	SHIELD CASE	G
		E11418-002	C.BOARD	E
		E11418-002	**CIRCUIT BOARD**	F
		E11418-002	**CIRCUIT BOARD**	G
		E11418-002BS	**CIRCUIT BOARD**	HBS
		E65508-002	TAB	F
		E65508-002	TAB	G
		E65508-002	TAB	HBS
		E67132-T3R15	**FUSE LABEL**	
		E67132-T5R0	**FUSE LABEL**	E
		E67764-202	R.TERMINAL	
		E67764-203	TERMINAL.ASSY	F
		E67764-203	TERMINAL.ASSY	G
		E67764-203	TERMINAL.ASSY	HBS
	J101	EMN00TV-405A	PIN JACK ASSY	
	J102	EMN00TV-402A	PIN JACK ASSY	
	J103	EMN00TV-402A	PIN JACK ASSY	
	J104	EMN00TP-404A	PIN JACK ASSY	
	J105	E03623-003	DIN SOCKET	
	J109	EMV7112-009	SOCKET	
	L301	EQL0111-391	INDUCTOR	G
	L302	EQL0111-391	INDUCTOR	G
	S201	ESP0001-007	PUSH SWITCH	
	S202	ESP0001-007	PUSH SWITCH	
	S203	ESP0001-007	PUSH SWITCH	
	S204	ESP0001-007	PUSH SWITCH	
	S205	ESP0001-007	PUSH SWITCH	
	S206	QST4261-E11	PUSH SWITCH	
	S207	QST4261-E11	PUSH SWITCH	
	S208	QST4102-E08	PUSH SWITCH	
	S209	QST4102-E08	PUSH SWITCH	

⚠ : SAFETY PARTS

■ TPS-318 [B] Voltage Selector PC Board Ass'y

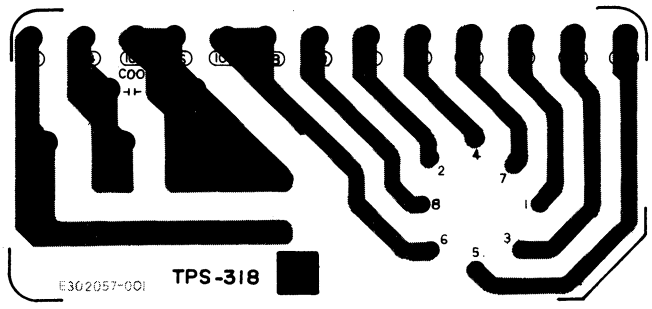

(Except for Europe, Australia, West Germany, U.K.)

CAPACITORS

⚠	ITEM	PART NUMBER	DESCRIPTION			AREA
	C001	QFH53BM-103M	0.01MF	250V	M.MYLAR	

OTHERS

⚠	ITEM	PART NUMBER	DESCRIPTION	AREA
		E302057-001	CIR.BOARD	
		E43727-001	TAB	
		E65508-001	TAB	
		QMC0637-004	AC SOCKET	
⚠		QSR0085-006U	V.SELECTOR	

Packing Materials and Parts Numbers

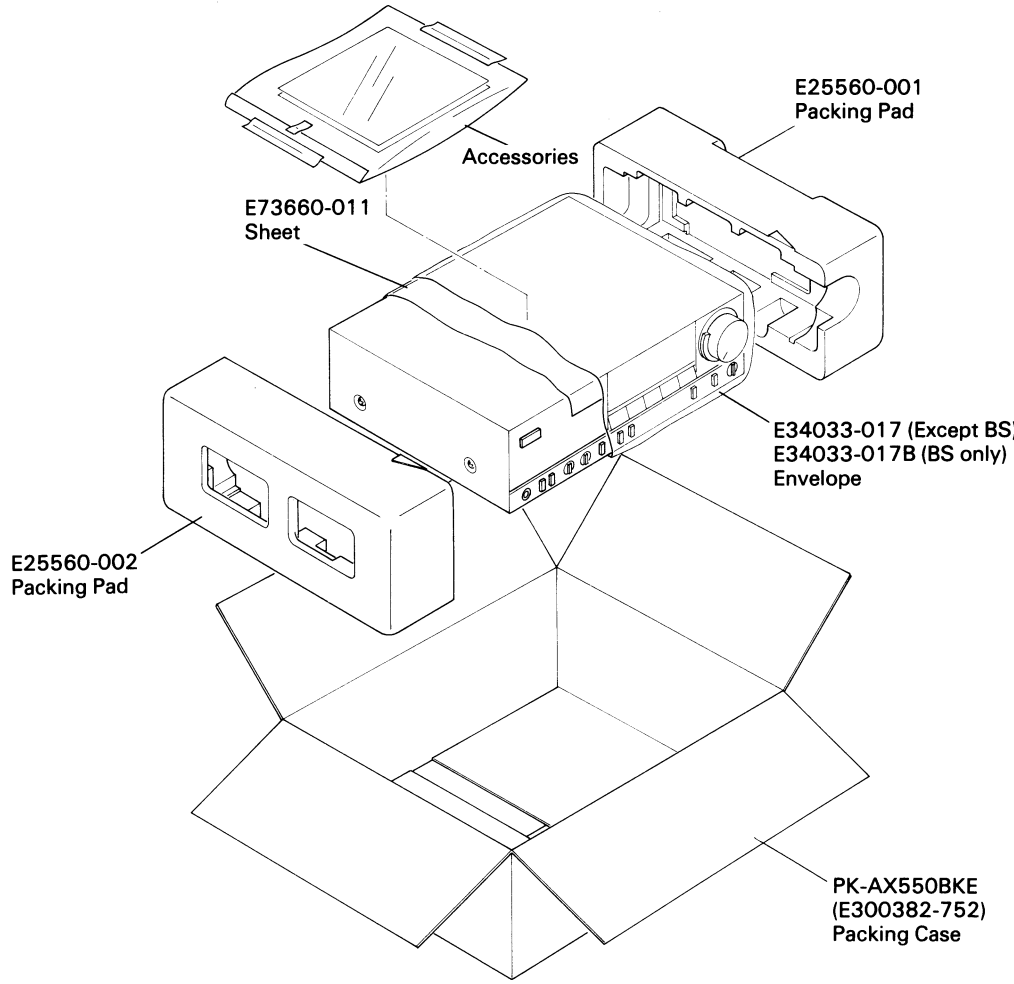

Accessories List

⚠	Item No.	Part Number	Part Name	Q'ty	Description	Areas
		E30580-1366A	Instruction Book	1		P, PG, E, A, G, U
		E30580-1366ABS	Instruction Book	1		BS
		BT20046C	Service Information Card	1		P, PG
		BT20048C	Warranty Card	1		P, PG
		BT20029C	Warranty Card	1	for Australia	A
		BT20098	Warranty Card	1	for New Zealand	A
		BT20064	Warranty Card	1		G
		BT20066	EEC AGENCY	1		G, BS
		BT20060	Warranty Card	1		BS
		QZL1008-001	FTZ Information Sheet	1		G
		E04056	Siemens Plug	1		PG, U
		E41202-2	Envelope	1		P, PG, E, A, G, U
		E41202-2B	Envelope	1		BS

⚠: Safety Parts

The Marks for Designated Areas

P, PG..... U.S. Military Market
E..... Europe
A..... Australia
G..... West Germany
BS..... U.K.
U..... Other Countries

No mark indicates all areas.

MEMO

Schematic Diagram

Notes:

1. ▭ shows DC voltage
2. —— indicates ± B pow
3. ▨ indicates signal pa

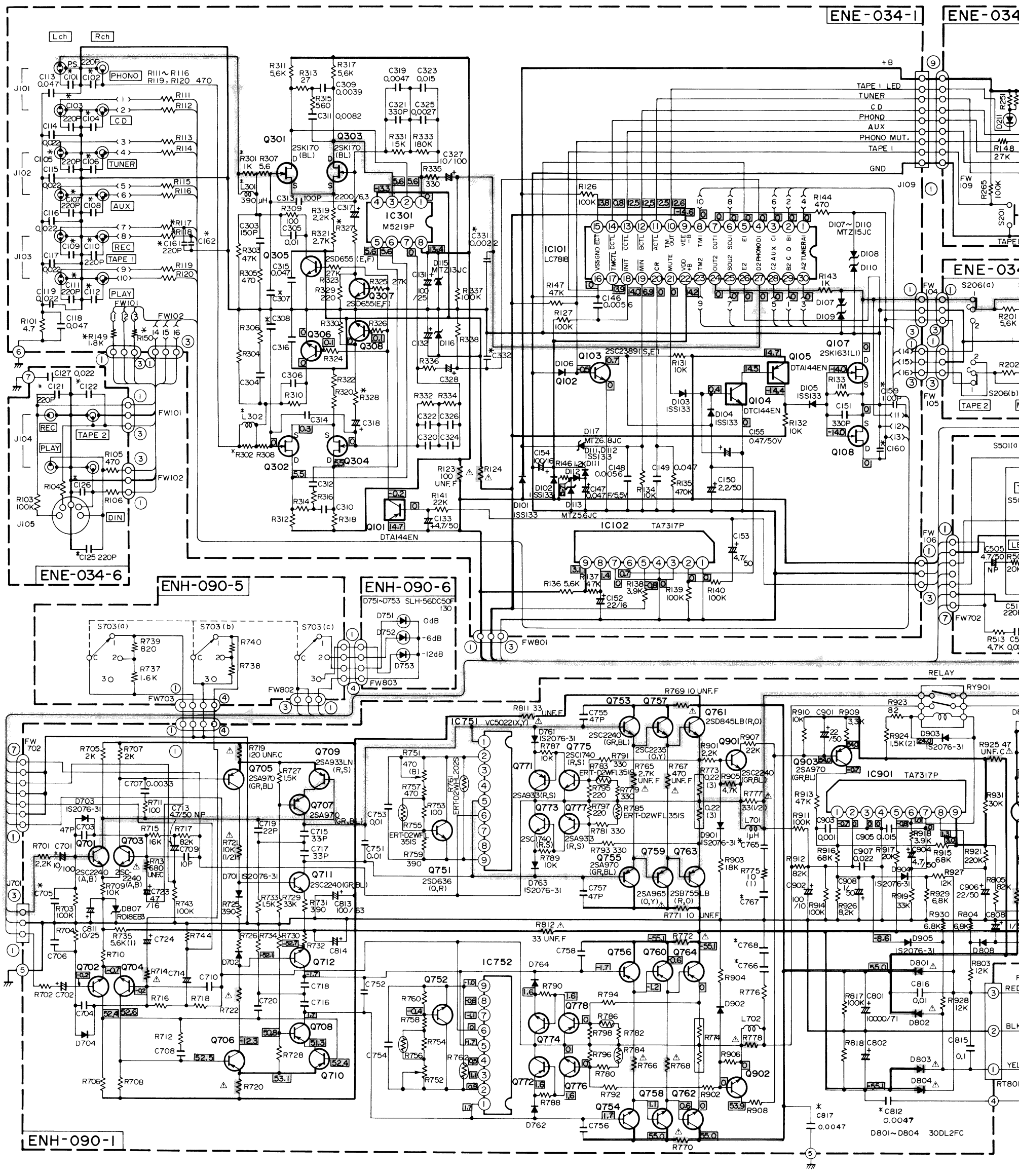

Notes:

1. ▭ shows DC voltage to the chassis with no signal input.
2. —— indicates ± B power supply.
3. ▭ indicates signal path.
4. When replacing the parts in the darkened area (▭) and those marked with ⚠, be sure to use the designated parts to ensure safety.
5. This is the standard circuit diagram.
   The design and contents are subject to change without notice.

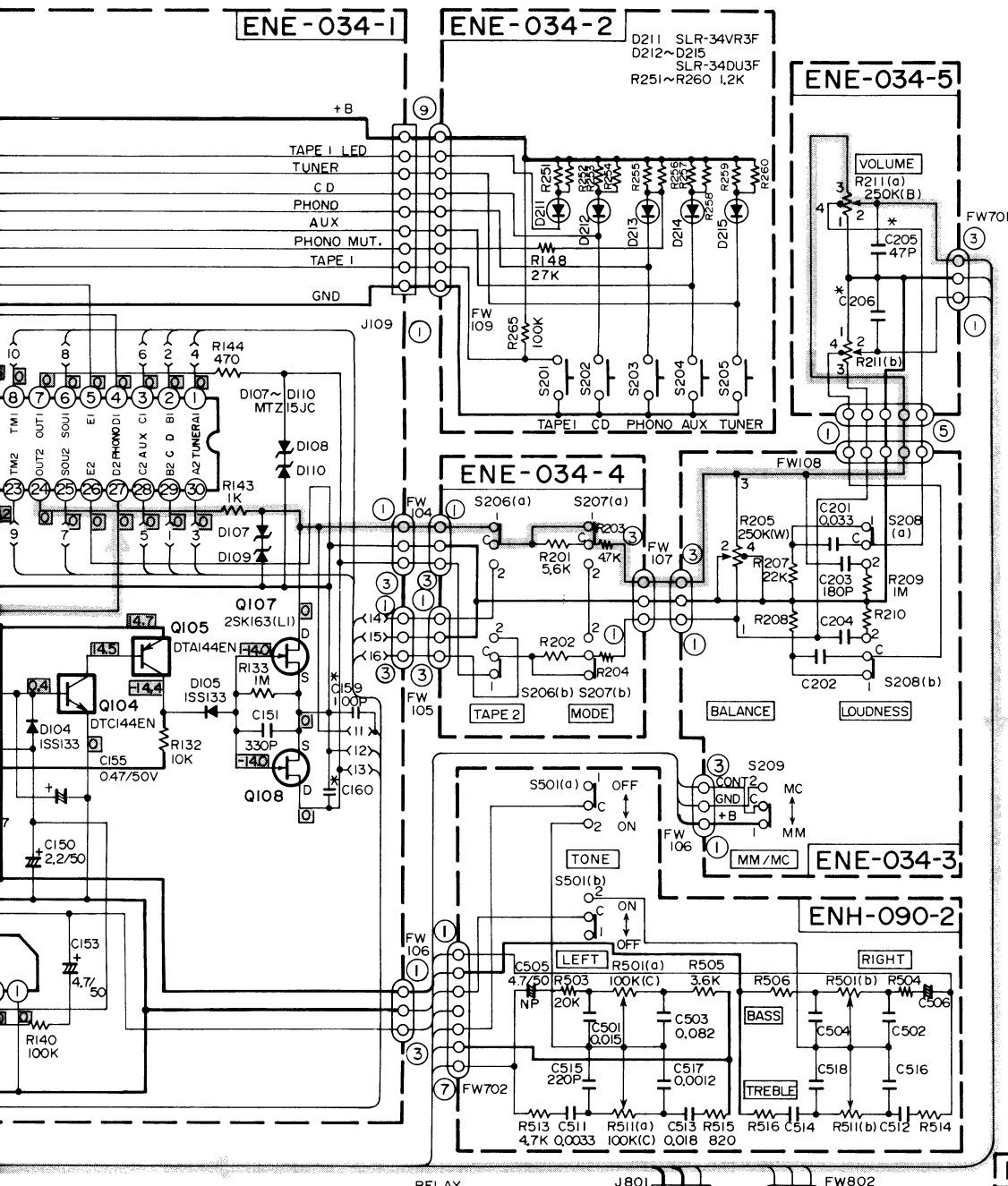

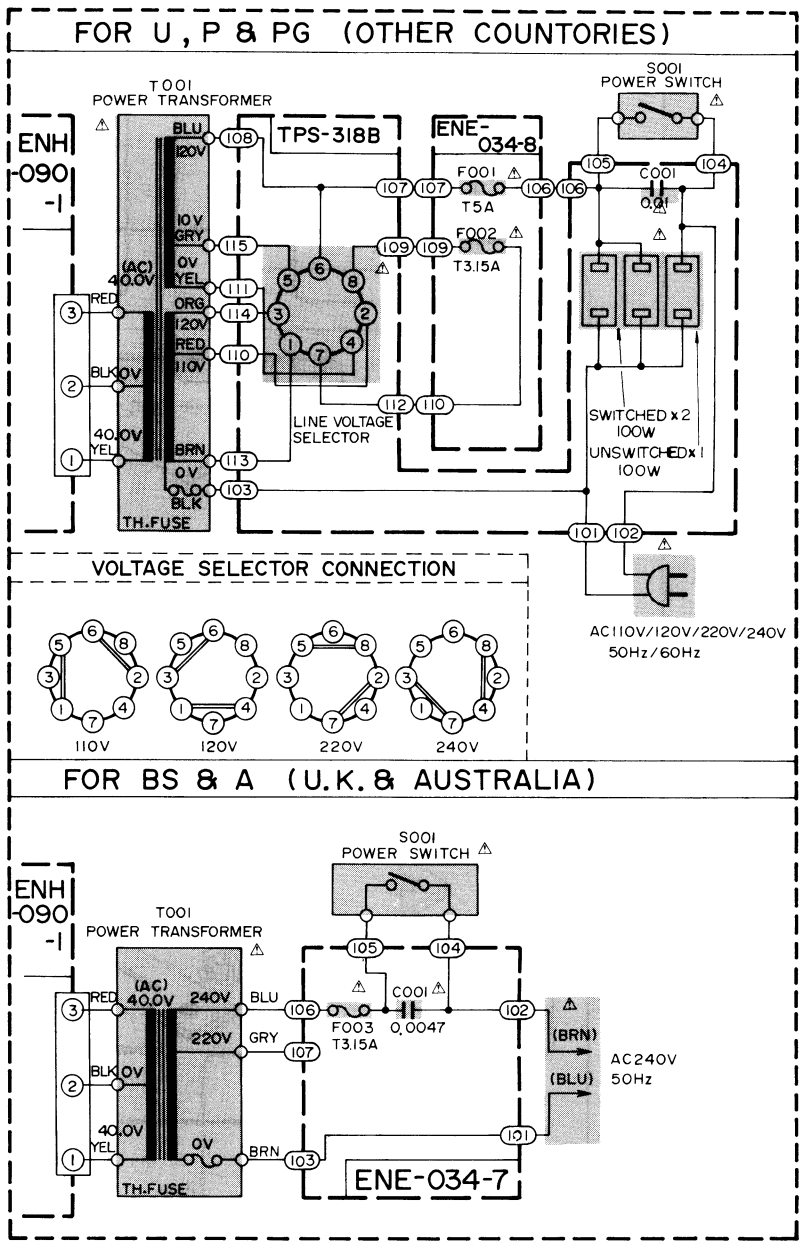

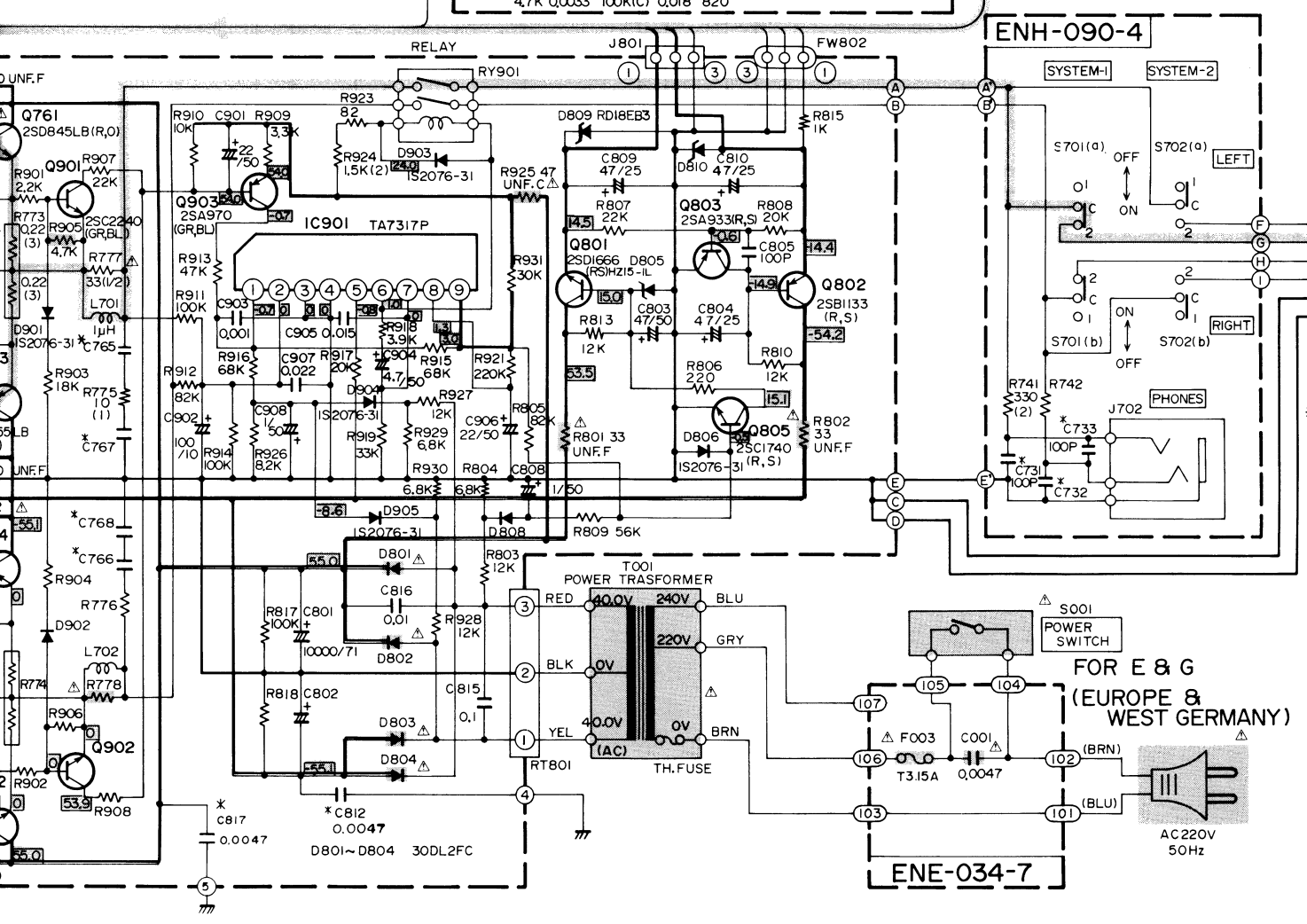

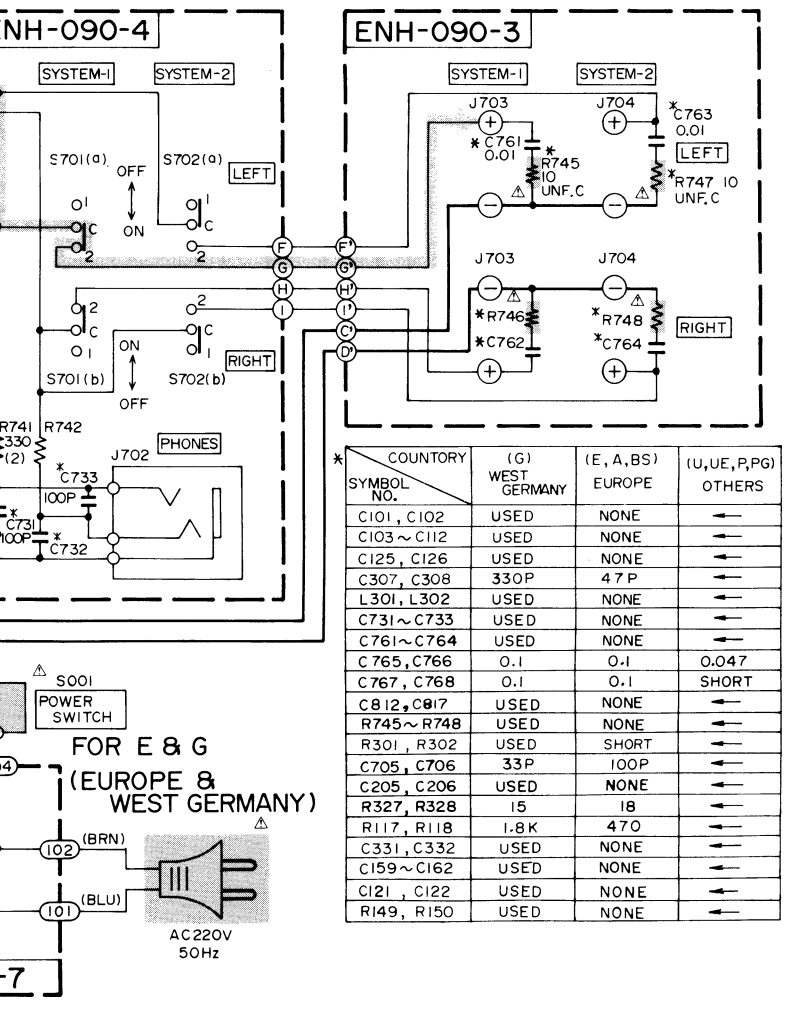

COUNTORY / SYMBOL NO.	(G) WEST GERMANY	(E, A, BS) EUROPE	(U, UE, P, PG) OTHERS
C101, C102	USED	NONE	←
C103~C112	USED	NONE	←
C125, C126	USED	NONE	←
C307, C308	330P	47P	←
L301, L302	USED	NONE	←
C731~C733	USED	NONE	←
C761~C764	USED	NONE	←
C765, C766	0.1	0.1	0.047
C767, C768	0.1	0.1	SHORT
C812, C817	USED	NONE	←
R745~R748	USED	NONE	←
R301, R302	USED	SHORT	←
C705, C706	33P	100P	←
C205, C206	USED	NONE	←
R327, R328	15	18	←
R117, R118	1.8K	470	←
C331, C332	USED	NONE	←
C159~C162	USED	NONE	←
C121, C122	USED	NONE	←
R149, R150	USED	NONE	←

Connection Diagram

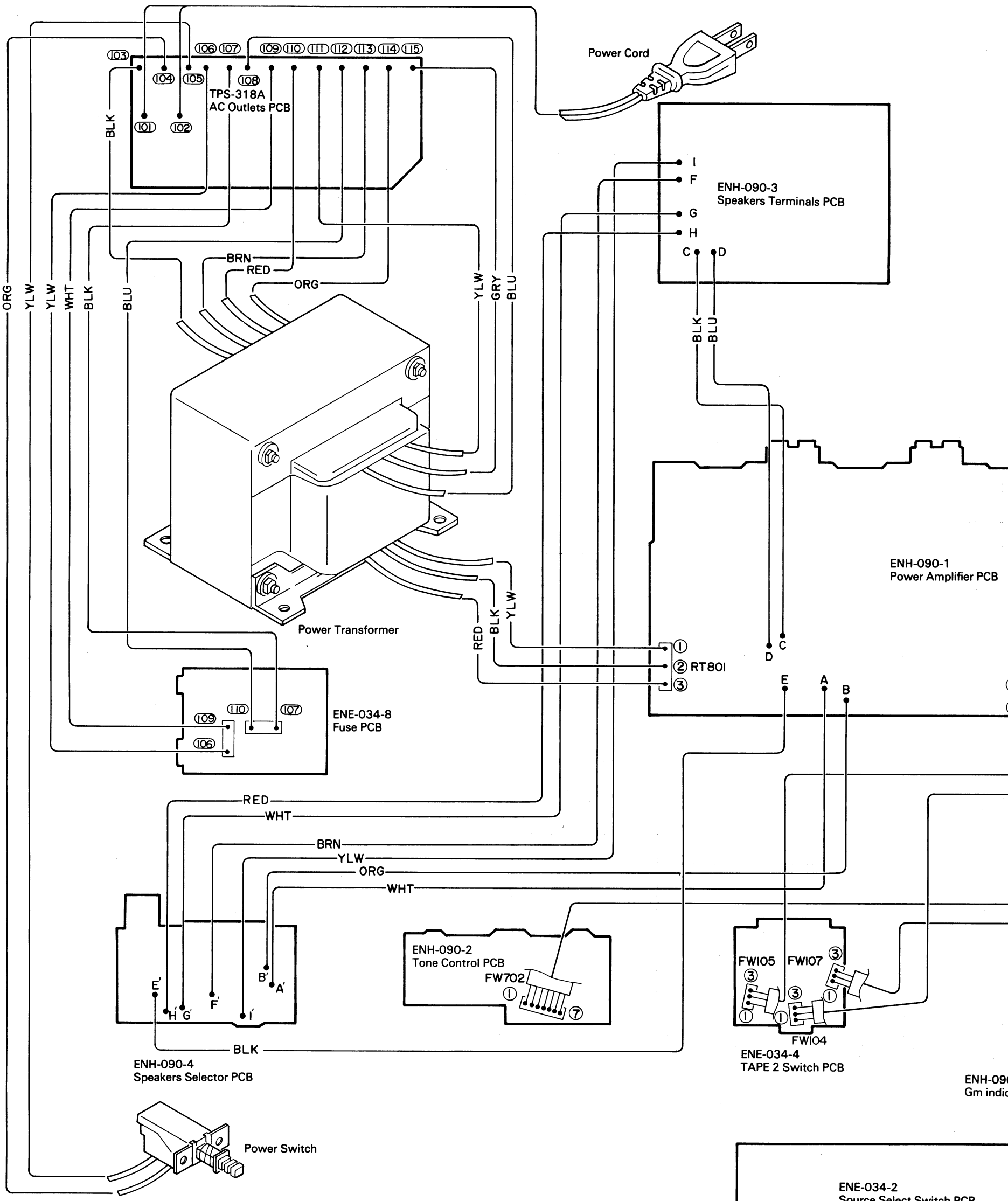

(No. 2973)

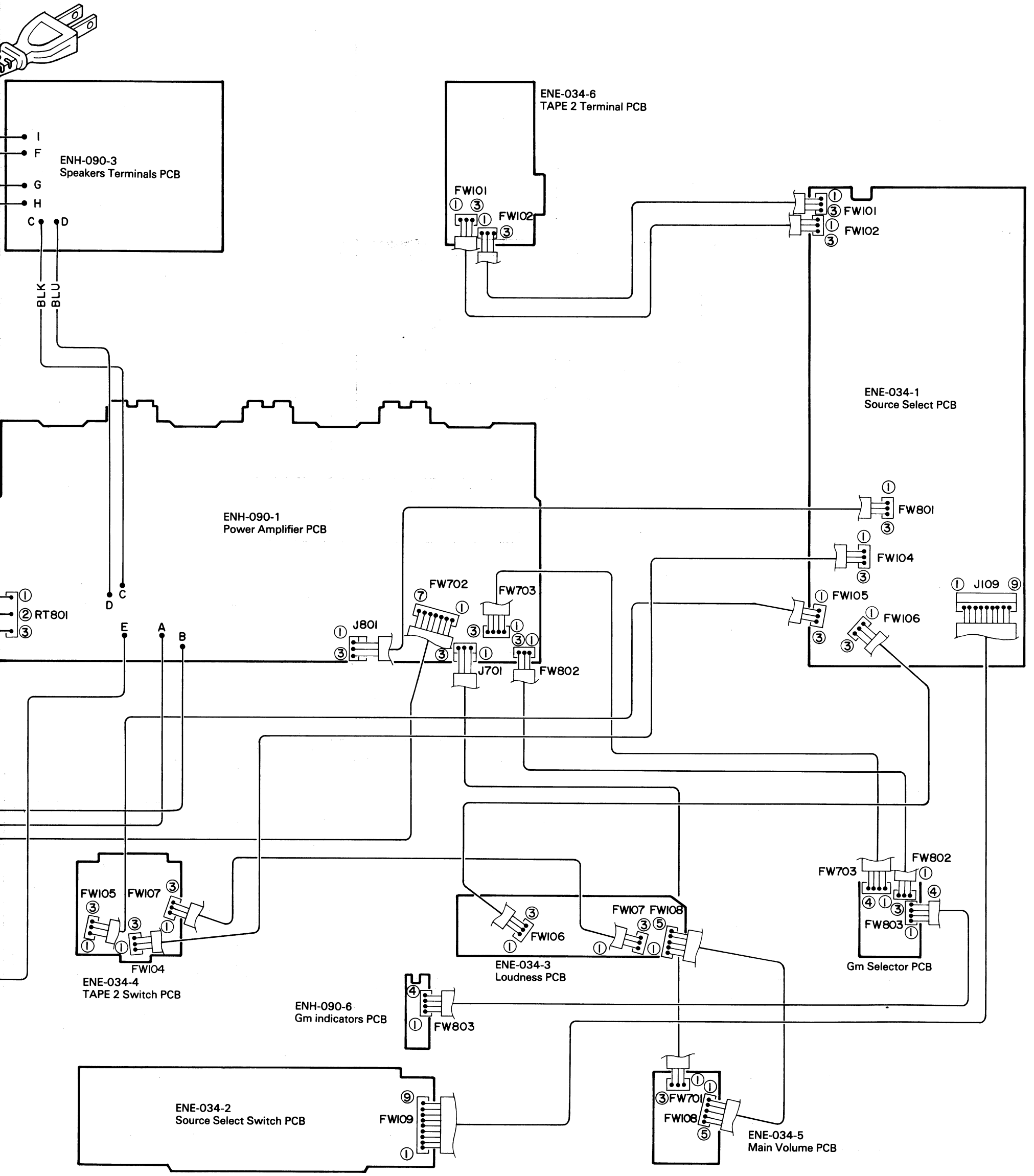
ENH-090-3
Speakers Terminals PCB
I
F
G
H
C
D
BLK
BLU
ENE-034-6
TAPE 2 Terminal PCB
FW101
FW102
FW101
FW102
ENE-034-1
Source Select PCB
ENH-090-1
Power Amplifier PCB
FW801
FW104
FW105
FW106
J109
RT801
D
C
E
A
B
J801
FW702
FW703
J701
FW802
FW105
FW107
FW104
ENE-034-4
TAPE 2 Switch PCB
FW106
FW107
FW108
ENE-034-3
Loudness PCB
FW703
FW802
FW803
Gm Selector PCB
ENH-090-6
Gm indicators PCB
FW803
ENE-034-2
Source Select Switch PCB
FW109
FW701
FW108
ENE-034-5
Main Volume PCB