SICA LOUDSPEAKERS

15"- 500W Professional Woofer

LP 385.65/ 1450 TP 4 Ω

Code Z008140

GENERAL CHARACTERISTICS		
Nominal Overall Diameter	385	mm
Nominal Voice Coil Diameter	65	mm
Magnet Weight	1450	g
Flux Density	1.15	T
Weight	5.44	Kg

ELECTRICAL CHARACTERISTICS		
Nominal Impedance	4	Ω
Musical Power	500	W
Rated Power*	250	W
Sensitivity @ 1 W, 1 m	98.0	dB

THIELE-SMALL PARAMETERS			
Voice Coil DC Resistance	R_E	3.66	Ω
Resonance Frequency	f_s	41.9	Hz
Mechanical Q Factor	Q_{MS}	3.45	
Electrical Q Factor	Q_{ES}	0.38	
Total Q Factor	Q_{TS}	0.34	
Mechanical Moving Mass	M_{MS}	59.3	g
Mechanical Compliance	C_{MS}	244	μm/N
Force Factor	$B \times l$	12.26	Wb/m
Equivalent Acoustic Volume	V_{AS}	195.1	lt.
Maximum Linear Displacement	X_{MAX}	+/-2.5	mm
Reference Efficiency	η_0	3.62	%
Diaphragm Area	S_D	754.8	cm^2
Losses Electrical Resistance	R_{ES}	33.2	Ω
Voice Coil Inductance @ 1kHz	L_E	0.50	mH

CONSTRUCTIVE CHARACTERISTICS	
Magnet	Ferrite
Voice Coil Winding	Copper
Voice Coil Former	Aluminium
Cone	Paper
Surround	Treated Cloth
Dust Dome	Solid Paper
Basket	Pressed Sheet Steel

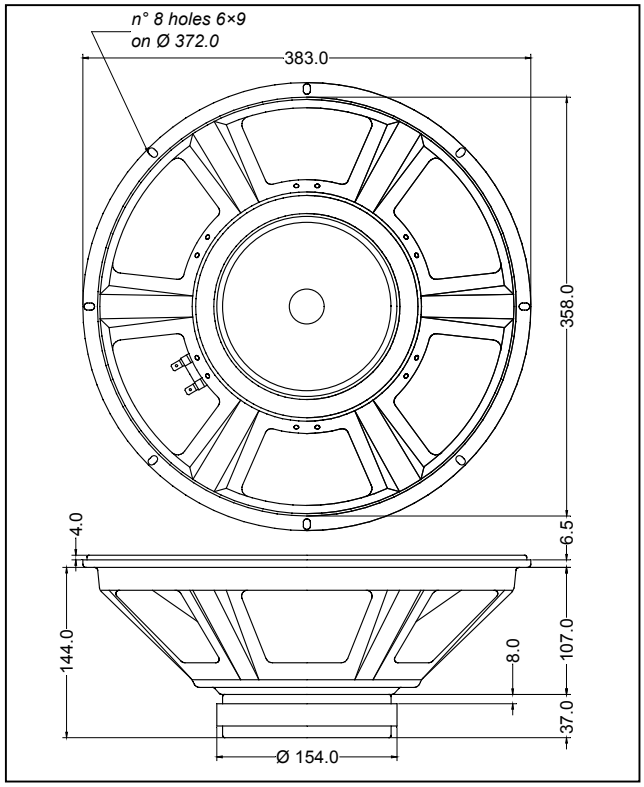

**rated power measured with 2 hours test with pink noise signal, 6 dB crest factor, loudspeaker mounted on enclosure*

Frequency Response on IEC Baffle (DIN 45575) @ 1 W, 1 m - Impedance

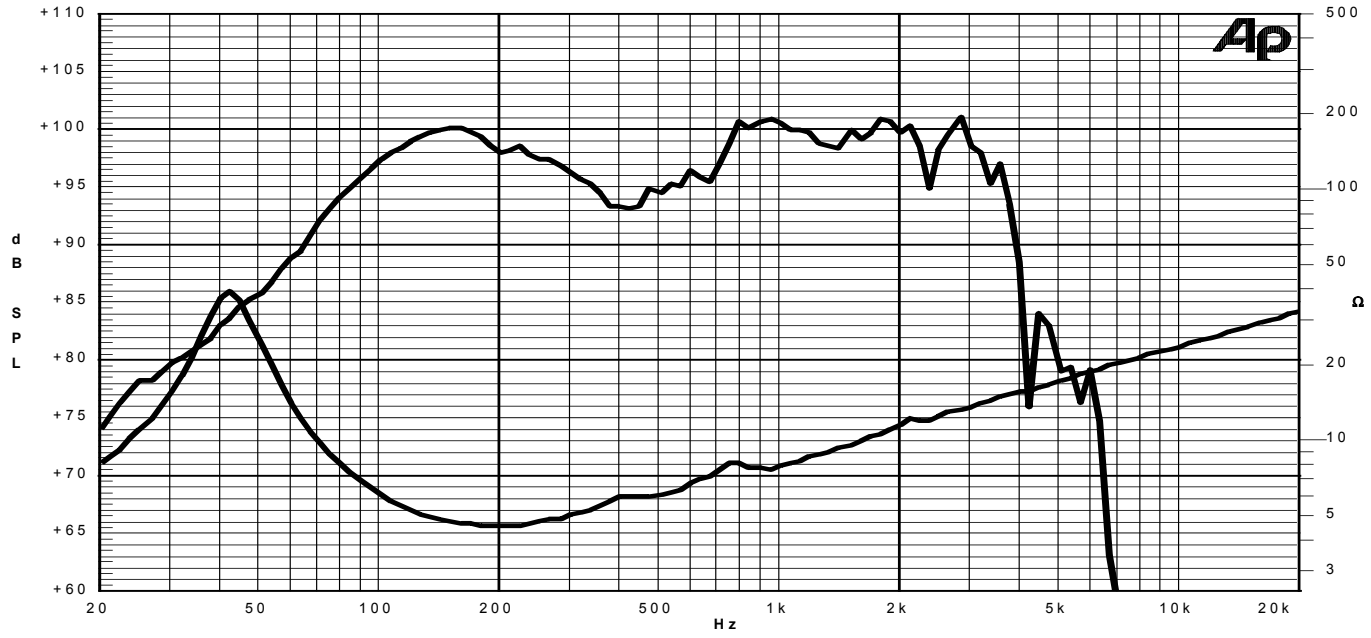

Due to continuing product improvement, the features and the design are subject to change without notice. 11/03/05

SICA Altoparlanti s.r.l. - ITALY – website: www.sica.it - E-mail: lab@sica.it - Tel. +39-071-7958072 - Fax +39-071-7959006