The Harman Kardon
Model hk 725

Preamplifier

Technical Manual

TREBLE HINGE (TURNOVER) = ~~2.5 KHz~~ 2.5 KHz

BASS HINGE (TURNOVER) = ~~300~~ 300 CUT / 500 BOOST

GENERAL UNIT EXPLODED VIEW

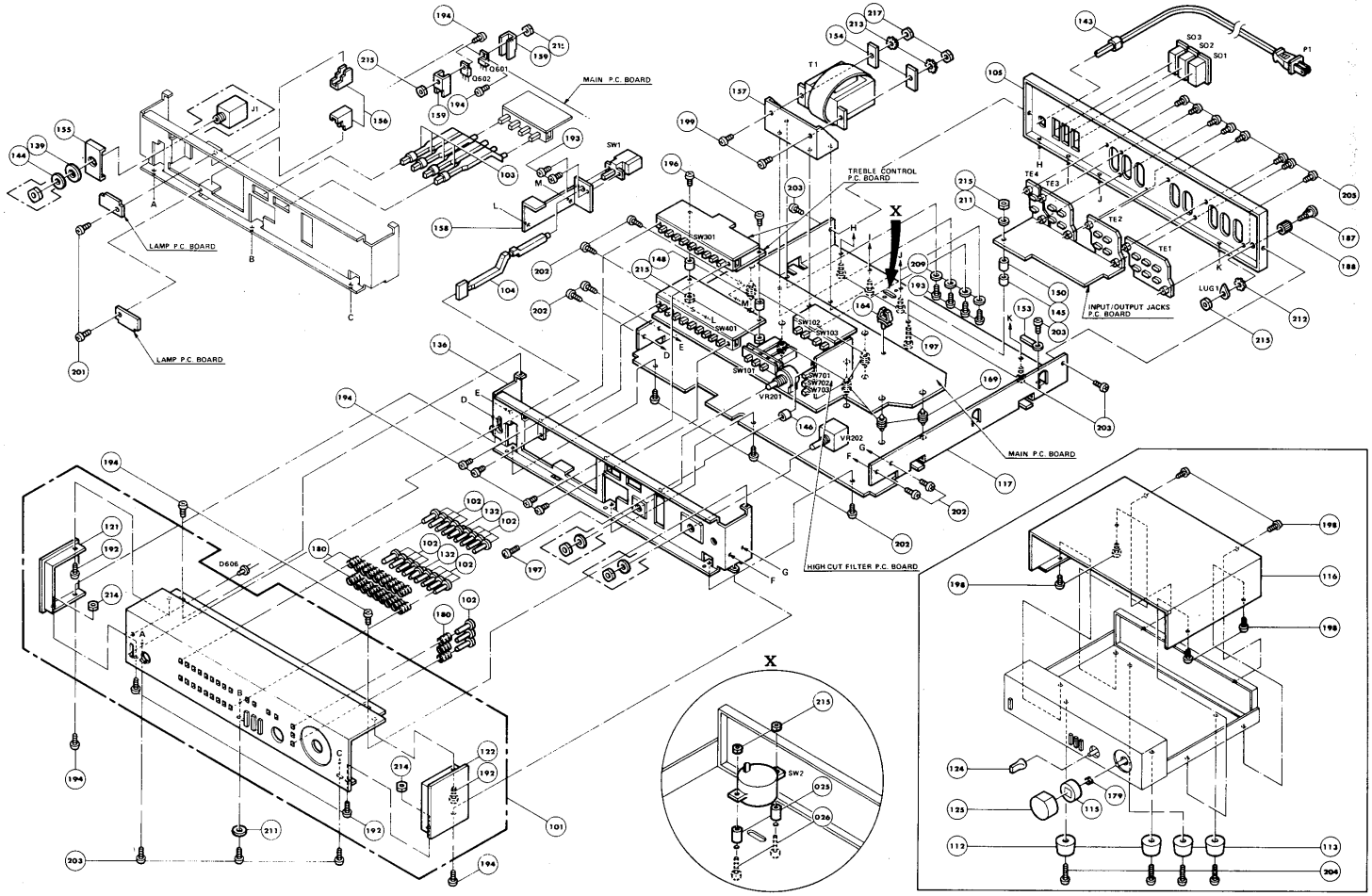

GENERAL UNIT PARTS LIST

SER. NO.	REF. NO.	PART NO.	DESCRIPTION
AA	101	A443-HK725	Front Panel Assembly
AB	102	A662-HK725-A	Push Button Assembly, Treble (x8), Bass (x8), High Cut, Subsonic, Loudness
AC	103	A662-HK725-B	Push Button Assembly, Tape Copy (x2), Tape Monitor (x2)
AD	104	A662-HK725-C	Push Button Assembly, Power
AE	105	A424-HK725	Cabinet Back Assembly
112	112	1319-7330	Foot, Gold (x2)
113	113	1319-7230	Foot, Black (x2)
115	115	1355-7031	Knob Base, Volume Control
116	116	1414-00302	Cabinet Top
117	117	1424-00701	Cabinet Bottom
121	121	1562-00602	Left Panel, Front Panel
122	122	1562-00702	Right Panel, Front Panel
124	124	1634-01001	Knob, Balance Control
125	125	1634-01501	Knob, Volume Control
132	132	1662-01201	Push Button, Treble Defeat, Bass Defeat
136	136	2211-7190	Chassis, Front
139	139	2111-1356	Felt, Headphones Jack (J1)
143	143	2114-415027	Bushing, AC Line Cord (P1)
144	144	2114-72167	Special Washer, Headphones Jack (J1)
145	145	2132-01702	Spacer, Input/Output Jacks P.C. Board Retaining
146	146	2132-01404	Spacer, High Cut Filter P.C. Board Retaining
148	148	2132-01401	Spacer, Treble Control P.C. Board Retaining (x2)
150	150	2132-01406	Spacer, Input/Output Jacks P.C. Board Retaining
153	153	2218-20	Holding Bracket, Lead Wire
154	154	2219-7093	Bracket, Power Transformer (T1) (x2)
155	155	2219-7519	Bracket, Headphones Jack (J1)
156	156	2219-7520	Bracket, Treble and Bass Defeat Switches (x2)
157	157	2219-7557	Bracket, Power Transformer (T1) Mounting
158	158	2219-7611	Bracket, Power Switch (SW1) Mounting
159	159	2222-7081	Heat Sink, Voltage Regulator Transistor (Q601,Q602) (x2)
164	164	2240-7061	Holder, Lead Wire
169	169	2240-7117	Holder, Main P.C. Board Retaining (x6)
179	179	2651-110518	Spring, Volume Knob
180	180	2651-210187	Coil Spring, Treble, Bass, High Cut, Subsonic and Loudness Push Buttons (x21)
187	187	2310-7002	Special Screw, Ground Terminal
188	188	2440-7001	Special Nut, Ground Terminal
192	192	2327-260629	Screw (+) (2.6 x 6mm) (x4)
193	193	2327-300629	Screw (+) (3 x 6mm) (x6)
194	194	2327-300829	Screw (+) (3 x 8mm) (x10)
196	196	2327-301429	Screw (+) (3 x 14mm) (x2)

- to be continued -

SER. NO.	REF. NO.	PART NO.	DESCRIPTION
197	197	2327-302529	Screw (+) (3 x 25mm) (x2)
198	198	2327-300649	Screw (+) (3 x 6mm) (x6)
199	199	2327-401029	Screw (+) (4 x 10mm) (x2)
201	201	2347-260622	Self-Tapping Screw (+) (2.6 x 6mm) (x2)
202	202	2347-300622	Self-Tapping Screw (+) (3 x 6mm) (x9)
203	203	2347-300822	Self-Tapping Screw (+) (3 x 8mm) (x10)
204	204	2347-301222	Self-Tapping Screw (+) (3 x 12mm) (x4)
205	205	2347-301041	Self-Tapping Screw (+) (3 x 10mm) (x8)
209	209	2401-037	Metal Washer (3.3ø x 8ø x 1t) (x4)
211	211	2411-30Z1	Flat Washer (3.2ø x 7ø x 0.5t) (x2)
212	212	2414-302	Toothed Lock Washer (3.2ø)
213	213	2414-402	Toothed Lock Washer (4.3ø) (x2)
214	214	2446-261Z9	Hexagon Nut (M2.6) (x2)
215	215	2446-301Z9	Hexagon Nut (M3) (x7)
217	217	2446-401Z9	Hexagon Nut (M4) (x2)

ELECTRICAL PARTS LIST

MISCELLANEOUS

SER. NO.	REF. NO.	PART NO.	DESCRIPTION
774	T1	5584-701276	Power Transformer
775	SW1	4431-01017358	Push Switch, Power
579	VR202	5118-104711	Variable Resistor, 100 k ohm, Volume Control
786	TE1	4486-6	6-Pin Jack, Phono/AUX/Tuner Input
778	P1	4161-7187	AC Line Cord
779	SO1,2,3	4474-108	External AC Socket, Switched, Unswitched
793	J1	4451-7188	Headphones Jack
782	J2	4163-70349	Connector with Lead Wire, Power Indicator
783	PL1,2	5731-0607142	Lamp, Treble and Bass Defeat Buttons Illuminate
781	D606	5637-GL2PR1	Light Emitting Diode, GL2PR1 Power Indicator
776	C1	5352-1030952	Capacitor, 0.01MF ±20% AC125V Metalized Polyester
794	C3,4,5	5361-223ZF	Capacitor, 0.022MF +80%-20% 50V Ceramic
797	LUG1	4211-4	Lug, Ground
771		4161-7185	Plug with Cord, RCA
784		4551-7500	P.C. Board, Lamp (x2)

MAIN P.C. BOARD

SER. NO.	REF. NO.	PART NO.	DESCRIPTION
RESISTORS			
533	R101,102, 133,134	5134-473J25P	47 k ohm ±5% 1/4W Carbon
517	R103,104	5134-470J25P	47 ohm ±5% 1/4W Carbon
521	R105,106, 107,108, 201,202, 231,232, 243,244, 245,246	5134-101J25P	100 ohm ±5% 1/4W Carbon
532	R109,110	5134-183J25P	18 k ohm ±5% 1/4W Carbon
527	R111,112, 213,214, 235,236	5134-222J25P	2.2 k ohm ±5% 1/4W Carbon
522	R113,114	5134-131J25P	130 ohm ±5% 1/4W Carbon
526	R117,118, 219,220	5134-152J25P	1.5 k ohm ±5% 1/4W Carbon
536	R119,120, 507	5102-1014713	100 ohm ±2% 1/4W Fuse
515	R121,122	5174-821381	820 ohm ±1% 1/4W Metal
531	R123,124	5134-153J25P	15 k ohm ±5% 1/4W Carbon
518	R125,126, 225,226	5134-820J25P	82 ohm ±5% 1/4W Carbon
514	R127,128	5174-514381	510 k ohm ±1% 1/4W Metal
513	R129,130	5174-393381	39 k ohm ±1% 1/4W Metal
523	R131,132, 207,208, 209,210, 215,216	5134-331J25P	330 ohm ±5% 1/4W Carbon
516	R135,136, 137,138	5174-151381	150 ohm ±1% 1/4W Metal
623	R203,204	5134-224J25P	220 k ohm ±5% 1/4W Carbon
624	R205,206	5134-274J25P	270 k ohm ±5% 1/4W Carbon
617	R211,212, 227,228	5134-103J25P	10 k ohm ±5% 1/4W Carbon
607	R221,222	5134-221J25P	220 ohm ±5% 1/4W Carbon
618	R223,224, 501,502	5134-123J25P	12 k ohm ±5% 1/4W Carbon
620	R229,230, 443,444	5134-823J25P	82 k ohm ±5% 1/4W Carbon
619	R233,234	5134-683J25P	68 k ohm ±5% 1/4W Carbon
598	R241,242	5135-331J50P	330 ohm ±5% 1/2W Carbon
625	R247,248	5134-104J25P	100 k ohm ±5% 1/4W Carbon
615	R249,250, 503,504	5134-102J25P	1 k ohm ±5% 1/4W Carbon
653	R401,402, 419,420	5134-822422	8.2 k ohm ±2% 1/4W Carbon

- to be continued -

SER. NO.	REF. NO.	PART NO.	DESCRIPTION
657	R403,404, 411,412	5134-123422	12 k ohm ±2% 1/4W Carbon
659	R405,406	5134-432422	4.3 k ohm ±2% 1/4W Carbon
656	R407,408	5134-103422	10 k ohm ±2% 1/4W Carbon
647	R409,410	5134-202422	2 k ohm ±2% 1/4W Carbon
651	R413,414	5134-512422	5.1 k ohm ±2% 1/4W Carbon
658	R415,416	5134-183422	18 k ohm ±2% 1/4W Carbon
655	R417,418	5134-152422	1.5 k ohm ±2% 1/4W Carbon
633	R421,422, 425,426	5134-181422	180 ohm ±2% 1/4W Carbon
652	R423,424	5134-622422	6.2 k ohm ±2% 1/4W Carbon
646	R427,428, 445,446	5134-182422	1.8 k ohm ±2% 1/4W Carbon
644	R429,430	5134-112422	1.1 k ohm ±2% 1/4W Carbon
643	R431,432, 435,436, 441,442	5134-102422	1 k ohm ±2% 1/4W Carbon
636	R433,434	5134-471422	470 ohm ±2% 1/4W Carbon
637	R437,438	5134-511422	510 ohm ±2% 1/4W Carbon
630	R439,440	5134-111422	110 ohm ±2% 1/4W Carbon
696	R505,506	5135-390J50P	39 ohm ±5% 1/2W Carbon
738	R601,602	5102-1004713	10 ohm ±2% 1/4W Fuse
601	R604	5136-102512	1 k ohm ±5% 1W Carbon
741	R611	5135-101J50P	100 ohm ±5% 1/2W Carbon
752	R612	5134-272J25P	2.7 k ohm ±5% 1/4W Carbon
742	R613	5135-561J50P	560 ohm ±5% 1/2W Carbon
582	VR201	5113-50375100	Variable Resistor, 50 k ohm, Balance Control

CAPACITORS

543	C101,102, 123,124	5355-101J1HS	100PF ±5% 50V Stylor
548	C103,104	5342-477B022	470MF ±20% 10V Electrolytic
541	C105,106	5359-6826954	6800PF ±1% 100V Polypropylene
540	C107,108	5359-1826954	1800PF ±1% 100V Polypropylene
554	C111,112	5361-220KSL	22PF ±10% 50V Ceramic
549	C113,114	5342-106D023	10MF ±20% 25V Electrolytic
552	C115,116	5345-107-35	100MF +50%-10% 35V Electrolytic
557	C117,118, 219,220	5354-104K1HM	0.1MF ±10% 50V Mylar
544	C121,122	5355-121J1HS	120PF ±5% 50V Stylor
546	C125,126	5353-680132	68PF ±5% 100V Mica
674	C201,202, 203,204	5354-473J1HM	0.047MF ±5% 50V Mylar
681	C207,208	5342-476B023	47MF ±20% 10V Electrolytic

- to be continued -

SER. NO.	REF. NO.	PART NO.	DESCRIPTION	
678	C209,210	5361-100DSL	10PF ±0.5PF 50V Ceramic	
682	C211,212, 405,406	5342-476C023	47MF ±20% 16V Electrolytic	
679	C213,214	5355-161J1HS	160PF ±5% 50V Stylor	
676	C215,216	5354-184J1HM	0.18MF ±5% 50V Mylar	
684	C217,218, 507,508	5345-107-16	100MF +50%-10% 16V Electrolytic	
680	C221,222	5355-301J1HS	300PF ±5% 50V Stylor	
683	C223,224	5355-431J1HS	430PF ±5% 50V Stylor	
669	C401,402	5359-2237954	0.022MF ±2% 100V Polypropylene	
671	C403,404	5359-1547954	0.15MF ±2% 100V Polypropylene	
688	C501,502	5345-475-25	4.7MF +50%-10% 25V Electrolytic	
689	C503,504	5345-106-25	10MF +50%-10% 25V Electrolytic	
690	C505	5345-336-16	33MF +50%-10% 16V Electrolytic	
692	C506	5345-107-25	100MF +50%-10% 25V Electrolytic	
698	C509,510	5354-103K1HM	0.01MF ±10% 50V Mylar	
734	C601,602	5345-337-35	330MF +50%-10% 35V Electrolytic	
735	C603,604	5345-476-35	47MF +50%-10% 35V Electrolytic	
733	C605,606	5345-477-50	470MF +50%-10% 50V Electrolytic	
739	C607,608	5362-103048	0.01MF +100%-0% 500V Ceramic	

SEMICONDUCTORS

687	IC501	5652-LA4170	Integrated Circuit, LA4170 Headphone Amp.	
501	Q101,103	5616-2SK136(Q	F.E.T., 2SK136(Q)	Equalizer Amp.
502	Q105,107, 109	5611-991(E)	Transistor, 2SA991(E)	
504	Q111	5613-1775(E)	Transistor, 2SC1775(E)	
503	Q113	5612-647(C)	Transistor, 2SB647(C)	
505	Q115	5614-667(C)	Transistor, 2SD667(C)	
501	Q102,104	5616-2SK136(Q	F.E.T., 2SK136(Q)	Equalizer Amp.
502	Q106,108, 110	5611-991(E)	Transistor, 2SA991(E)	
504	Q112	5613-1775(E)	Transistor, 2SC1775(E)	
503	Q114	5612-647(C)	Transistor, 2SB647(C)	
505	Q116	5614-667(C)	Transistor, 2SD667(C)	
561	Q201,203	5616-2SK106(C	F.E.T., 2SK106(C)	Tone Control Amp.
562	Q205,207, 209	5611-872(E)	Transistor, 2SA872(E)	
564	Q211	5613-1775(E)	Transistor, 2SC1775(E)	
563	Q213	5612-646(C)	Transistor, 2SB646(C)	
565	Q215	5614-666(C)	Transistor, 2SD666(C)	
561	Q202,204	5616-2SK106(C	F.E.T., 2SK106(C)	Tone Control Amp.
562	Q206,208, 210	5611-872(E)	Transistor, 2SA872(E)	
564	Q212	5613-1775(E)	Transistor, 2SC1775(E)	
563	Q214	5612-646(C)	Transistor, 2SB646(C)	
565	Q216	5614-666(C)	Transistor, 2SD666(C)	

- to be continued -

SER. NO.	REF. NO.	PART NO.	DESCRIPTION
724	Q601	5613-1419(C)	Transistor, 2SC1419(C) Voltage Regulator
723	Q602	5611-755(C)	Transistor, 2SA755(C) Voltage Regulator
725	Q603,604	5616-2SK106(C	F.E.T., 2SK106(C) Current Regulator
510	D101,102, 201,202	5631-1S2076	Diode, 1S2076
509	D103,104, 203,204	5641-MV103	Varistor, MV103
570	D205	5635-HZ11B1	Zener Diode, HZ11B1 10.4V±0.2V
727	D601,602	5635-RD24EB	Zener Diode, RD24EB 24.2V±1.4V
729	D603	5685-S1VB20	Bridge Silicon Diode, S1VB20
730	D605	5632-1SR35-10	Diode, 1SR35-10

MISCELLANEOUS

576	SW101	4431-03127147	Push Switch, Tuner/AUX/Phono
575	SW102	4431-02087151	Push Switch, Tape Copy
577	SW103	4431-02047251	Push Switch, Tape Monitor
573	SW401	4431-0922713	Push Switch, Bass
796		4214-7008	Terminal for Lead Wire (x29)
147		2132-5049	Spacer, Resistors (x14)
149		2132-7048	Spacer, R613 (x2)
587		4551-7492	P.C. Board, Main
594		4551-7495	P.C. Board, Bass Switch Upper

TREBLE CONTROL P.C. BOARD

SER. NO.	REF. NO.	PART NO.	DESCRIPTION
RESISTORS			
650	R301,302, 321,322	5134-332422	3.3 k ohm ±2% 1/4W Carbon
641	R303,304	5134-182422	1.8 k ohm ±2% 1/4W Carbon
649	R305,306, 307,308	5134-302422	3 k ohm ±2% 1/4W Carbon
640	R309,310	5134-621422	620 ohm ±2% 1/4W Carbon
660	R311,312	5134-822422	8.2 k ohm ±2% 1/4W Carbon
661	R313,314	5134-123422	12 k ohm ±2% 1/4W Carbon
648	R315,316	5134-222422	2.2 k ohm ±2% 1/4W Carbon
654	R317,318	5134-682422	6.8 k ohm ±2% 1/4W Carbon
632	R319,320	5134-131422	130 ohm ±2% 1/4W Carbon
627	R323,324	5134-680422	68 ohm ±2% 1/4W Carbon
645	R325,326	5134-122422	1.2 k ohm ±2% 1/4W Carbon
628	R327,328	5134-750422	75 ohm ±2% 1/4W Carbon
638	R329,330	5134-561422	560 ohm ±2% 1/4W Carbon
629	R331,332	5134-111422	110 ohm ±2% 1/4W Carbon
635	R333,334	5134-361422	360 ohm ±2% 1/4W Carbon
631	R335,336, 339,340	5134-121422	120 ohm ±2% 1/4W Carbon
634	R337,338	5134-221422	220 ohm ±2% 1/4W Carbon
639	R341,342	5134-271422	270 ohm ±2% 1/4W Carbon
662	R343,344	5134-393J25P	39 k ohm ±5% 1/4W Carbon
664	R345,346	5134-125J25P	1.2 M ohm ±5% 1/4W Carbon
665	R347,348	5134-104J25P	100 k ohm ±5% 1/4W Carbon
600	R603	5136-102512	1 k ohm ±5% 1W Carbon
CAPACITORS			
668	C301,302	5359-2727954	2700PF ±2% 100V Polypropylene
670	C303,304	5359-3937954	0.039MF ±2% 100V Polypropylene
MISCELLANEOUS			
572	SW301	4431-0922712	Push Switch, Treble
591		4551-7496	P.C. Board, Treble Switch Lower
592		4551-7497	P.C. Board, Treble Switch Upper

HIGH CUT FILTER P.C. BOARD

SER. NO.	REF. NO.	PART NO.	DESCRIPTION
RESISTORS			
707	R701,702	5154-333J25R	33 k ohm ±5% 1/4W Carbon
708	R703,704	5154-473J25R	47 k ohm ±5% 1/4W Carbon
706	R705,706	5154-822J25R	8.2 k ohm ±5% 1/4W Carbon
704	R707,708	5154-101J25R	100 ohm ±5% 1/4W Carbon
709	R709,710	5154-223J25R	22 k ohm ±5% 1/4W Carbon
705	R711,712	5154-331J25R	330 ohm ±5% 1/4W Carbon
710	R713,714	5134-101J25P	100 ohm ±5% 1/4W Carbon
CAPACITORS			
717	C701,702, 703,704	5355-681J1HS	680PF ±5% 50V Stylor
719	C705,706	5345-476B0212	47MF ±20% 10V Electrolytic
716	C707,708	5355-101J1HS	100PF ±5% 50V Stylor
718	C709,710	5354-104K1HM	0.1MF ±10% 50V Mylar
SEMICONDUCTORS			
702	Q701,702	5613-1845(E)	Transistor, 2SC1845(E) High Cut Filter
MISCELLANEOUS			
574	SW701/702/ 703	4431-03067348	Push Switch, High Cut/Subsonic/ Loudness
593		4551-7585	P.C. Board

INPUT/OUTPUT JACKS P.C. BOARD

SER. NO.	REF. NO.	PART NO.	DESCRIPTION
RESISTORS			
790	R1,2,3,4	5134-102J25P	1 k ohm ±5% 1/4W Carbon
759	R605	5136-102512	1 k ohm ±5% 1W Carbon
755	R606	5134-104J25P	100 k ohm ±5% 1/4W Carbon
756	R607	5134-824J25P	820 k ohm ±5% 1/4W Carbon
753	R608	5134-332J25P	3.3 k ohm ±5% 1/4W Carbon
754	R609	5134-563J25P	56 k ohm ±5% 1/4W Carbon
751	R610	5134-152J25P	1.5 k ohm ±5% 1/4W Carbon
CAPACITORS			
749	C609	5345-107B0212	100MF ±20% 10V Electrolytic
748	C610	5345-335F0212	3.3MF ±20% 50V Electrolytic
SEMICONDUCTORS			
745	Q605,606, 607	5613-1345(E)	Transistor, 2SC1345(E) Muting
746	D604	5632-1SR35-10	Diode, 1SR35-10
MISCELLANEOUS			
744	RE601	4331-2024716	Relay, Muting 221D024 OMRON
787	TE2,3	4484-24	4-Pin Jack, Tape 1 Input/Output, Tape 2 Input/Output
788	TE4	4482-7114	2-Pin Jack, Preamplifier Output
796		4214-7008	Terminal for Lead Wire (x16)
152		2132-7048	Spacer, R605 (x2)
789		4551-7538	P.C. Board

PARTS LIST OF MULTI VOLTAGE UNIT

AS TO ALL OTHER PARTS EXCEPT THE FOLLOWING PARTS IN REF. NO., PLEASE REFER TO THE SERVICE MANUAL OF REGULAR VOLTAGE UNIT.

SER. NO.	REF. NO.	PART NO.	DESCRIPTION
PART NO. CHANGE			
AEB	105	A424-HK725-A	Cabinet Back Assembly
117B	117	1424-02901	Cabinet Bottom
774B	T1	5584-702280	Power Transformer
775B	SW1	4431-01017658	Push Switch, Power
778B	P1	4161-7256	AC Line Cord
776B	C1	5352-1030958	Capacitor, 0.01MF ±20% AC250V Metalized Polyester
ADDITIONAL USAGE			
216B	215	2446-30129	Hexagon Nut (M3) (x2)
025B	025	2132-7016	Spacer, Voltage Selector Switch (SW2) (x2)
026B	026	2327-301229	Screw (+) (3 x 12mm) (x2)
041B	SW2	4411-104736	Rotary Switch, Power Source Voltage Selector

SCHEMATIC DIAGRAM NOTES

1. All resistances are 1/4 watt, unless noted otherwise. Values are in ohms.
   K = 1000 M = 1000K
2. All capacitances values are in MF unless noted otherwise. PF = MMF

VOLTAGE CHART

AC 120V, volume control at minimum, balance control at mechanical center, no signal, chassis ground.

+B1	+22V	-B1	-22V
+B2	+10.4V	-B2	-10V
+B3	+6V	-B3	-6V (Lamp Lighting)

	BASE	EMITTER	COLLECTOR
Q105,106	+21.1V	+21.7V	+19.7V
Q107,108	+21.1V	+21.7V	+21.1V
Q109,110	+19.7V	+20.3V	0V
Q111,112	-21V	-21.7V	-17V
Q113,114	+20.3V	+20.8V	+0.2V
Q115,116	-21V	-21.6V	+0.2V
Q205,206	+10.5V	+11.2V	+7.9V
Q207,208	+10.5V	+11.2V	+10.5V
Q209,210	+7.9V	+8.6V	0V
Q211,212	-8.3V	-8.9V	-6.1V
Q213,214	+8.6V	+9.3V	-0.2V
Q215,216	-8.3V	-8.9V	-0.2V
Q601	+22.6V	+22V	+32.5V
Q602	-22.6V	-22V	-32.5V
Q605	+0.7V	0V	+0.7V
Q606	+1.3V	+0.7V	+0.7V
Q607	-7.5V	0V	+1.3V
Q701,702	-0.5V	-1.1V	+21.9V

	GATE	SOURCE	DRAIN
Q101,102	0V	0V	+19.7V
Q103,104	+0.1V	0V	+21.1V
Q201,202	0V	0V	+7.9V
Q203,204	-0.2V	0V	+10.5V
Q603	+22.6V	+22.6V	+32.5V
Q604	-32.5V	-32.5V	-22.6V

IC501

1.	0V	8.	0V
2.	+20.5V	9.	+10.5V
3.	+11.7V	10.	+12V
4.	+11.7V	11.	+12V
5.	+11.7V	12.	+12V
6.	+10.5V	13.	+12.5V
7.	0V	14.	0V

IC SCHEMATIC DIAGRAM

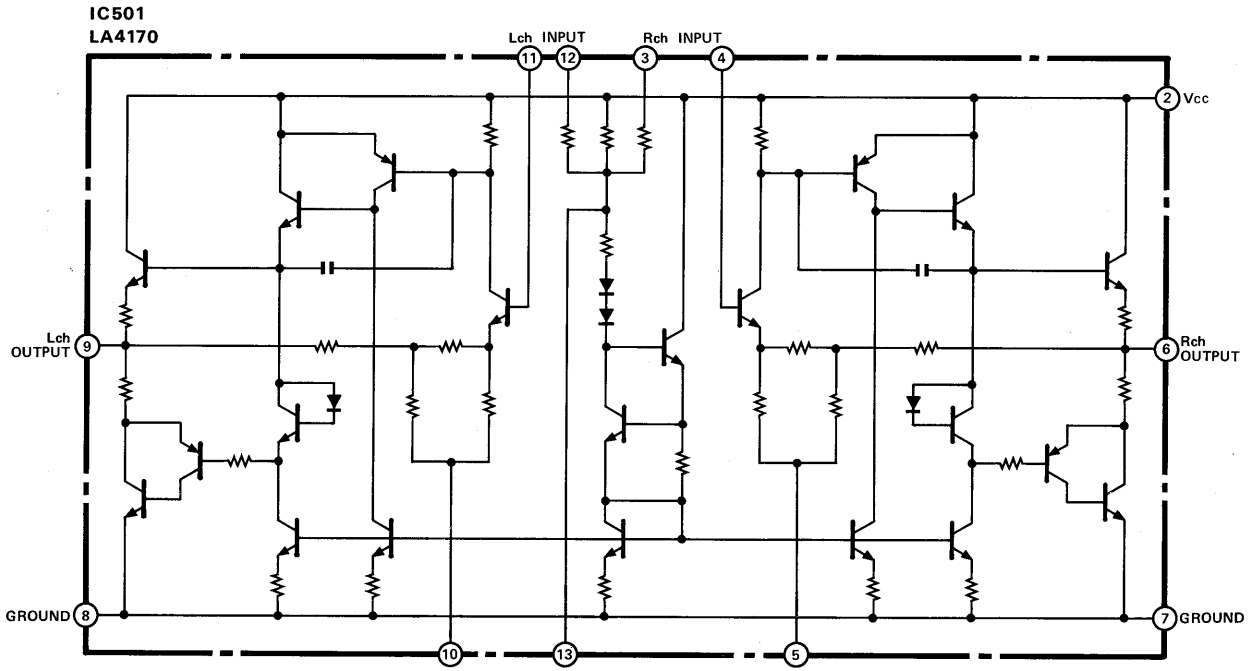

TREBLE CONTROL P.C. BOARD

UPPER P.C. BOARD

LOWER P.C. BOARD

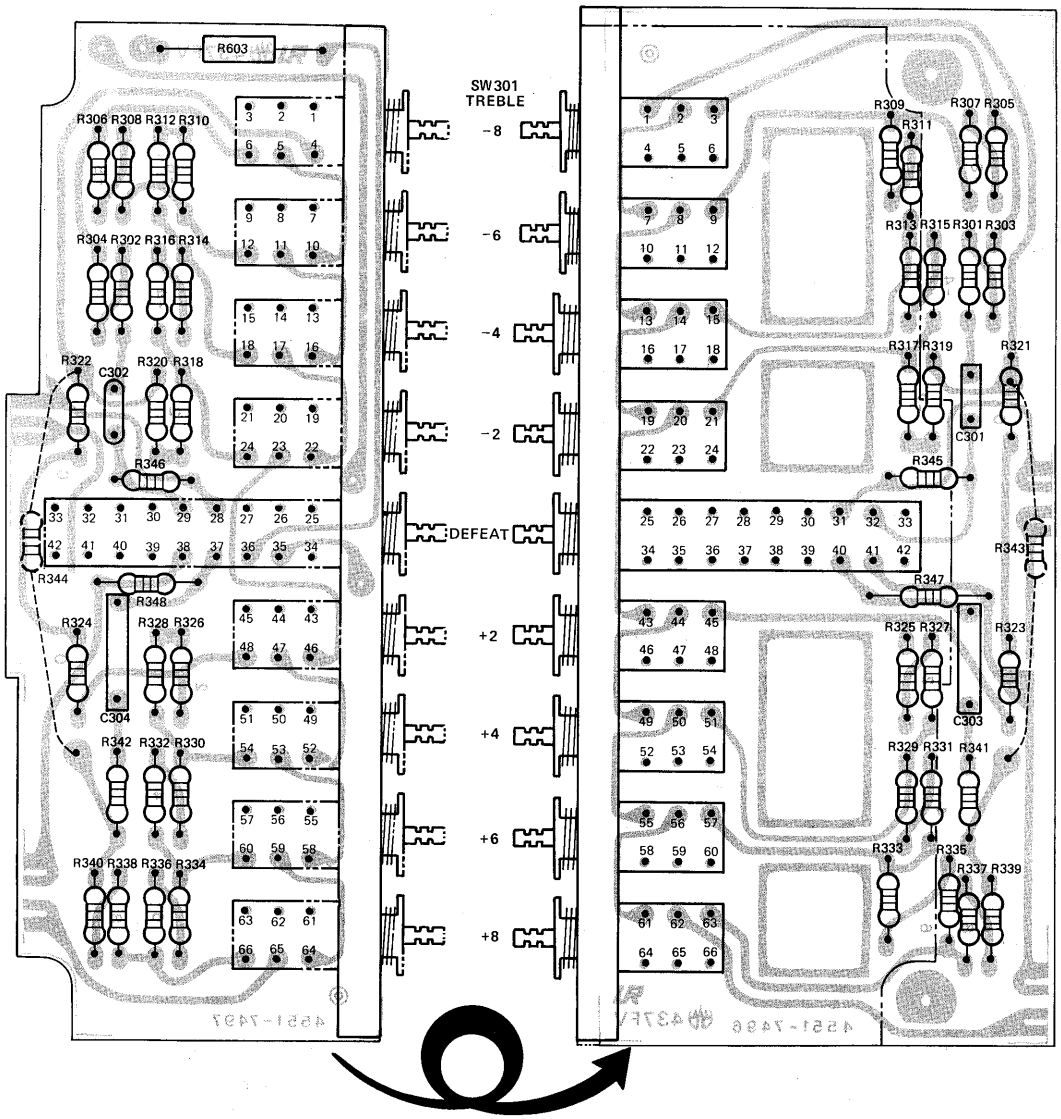

HIGH CUT FILTER P.C. BOARD

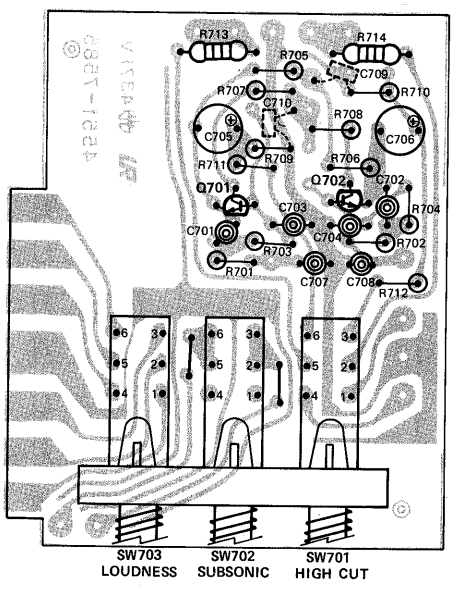

D551-HK725-E

INPUT/OUTPUT JACKS P.C. BOARD

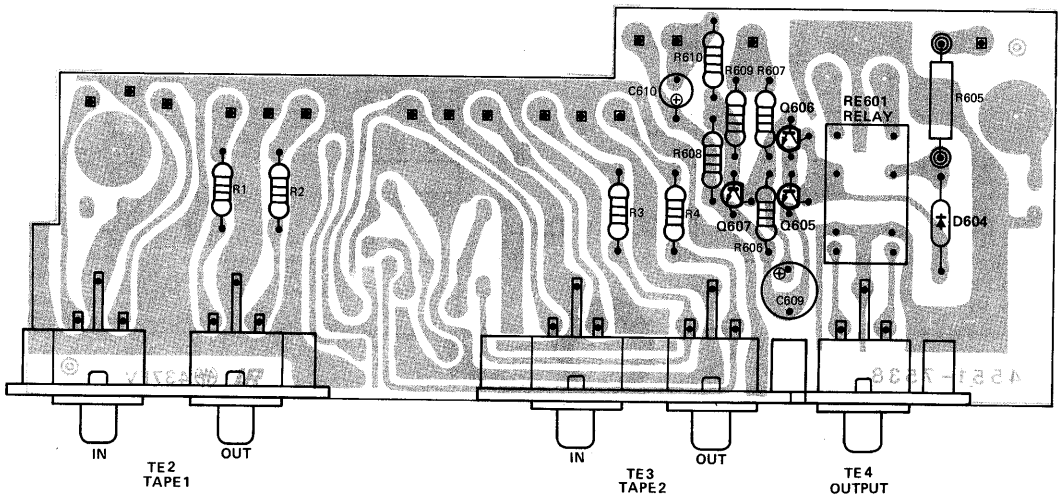

MAIN P.C. BOARD

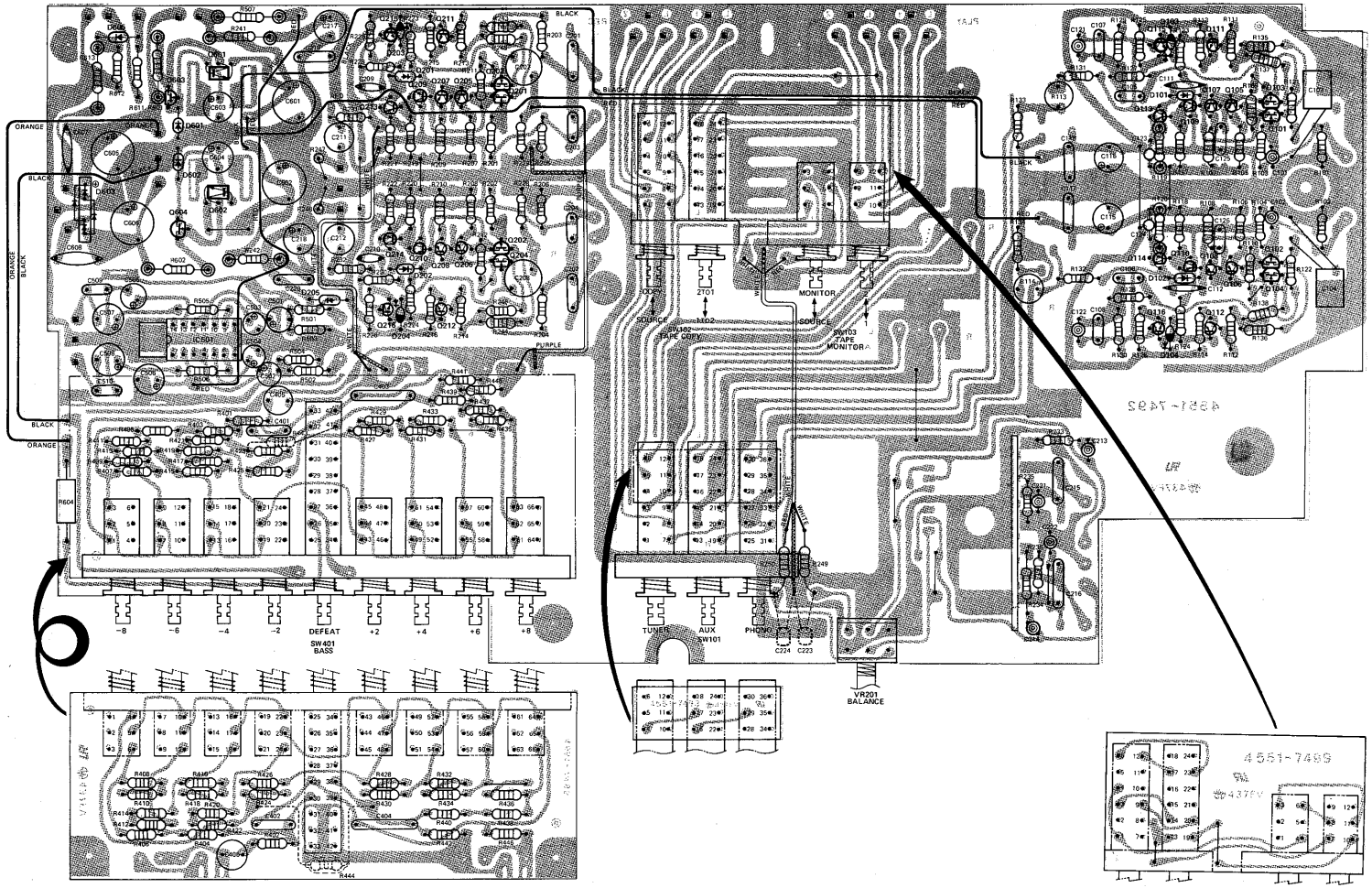

WIRING DIAGRAM — MODEL hk 725 — 120V ONLY

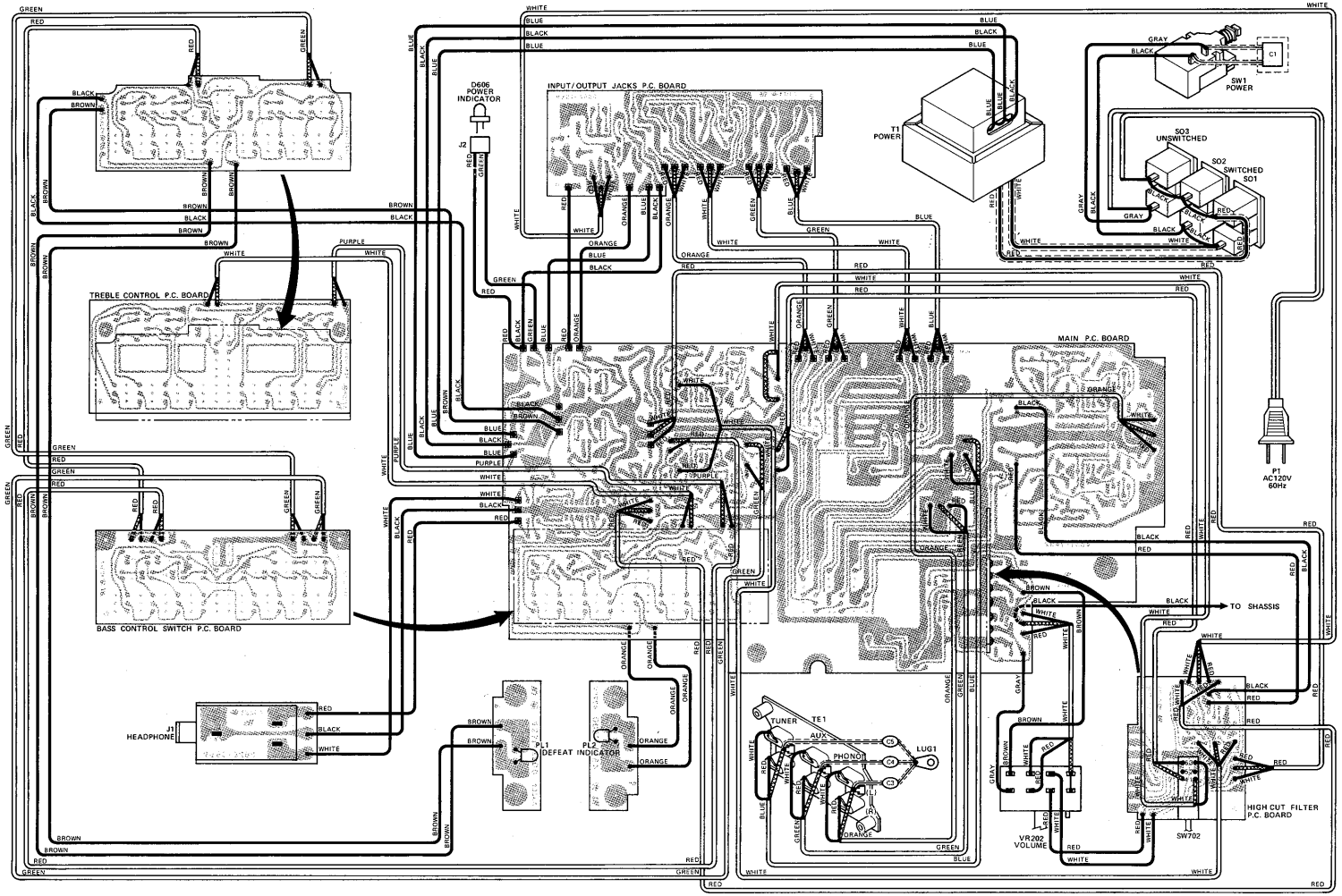

WIRING DIAGRAM — MODEL hk 725 — MULTI VOLTAGE

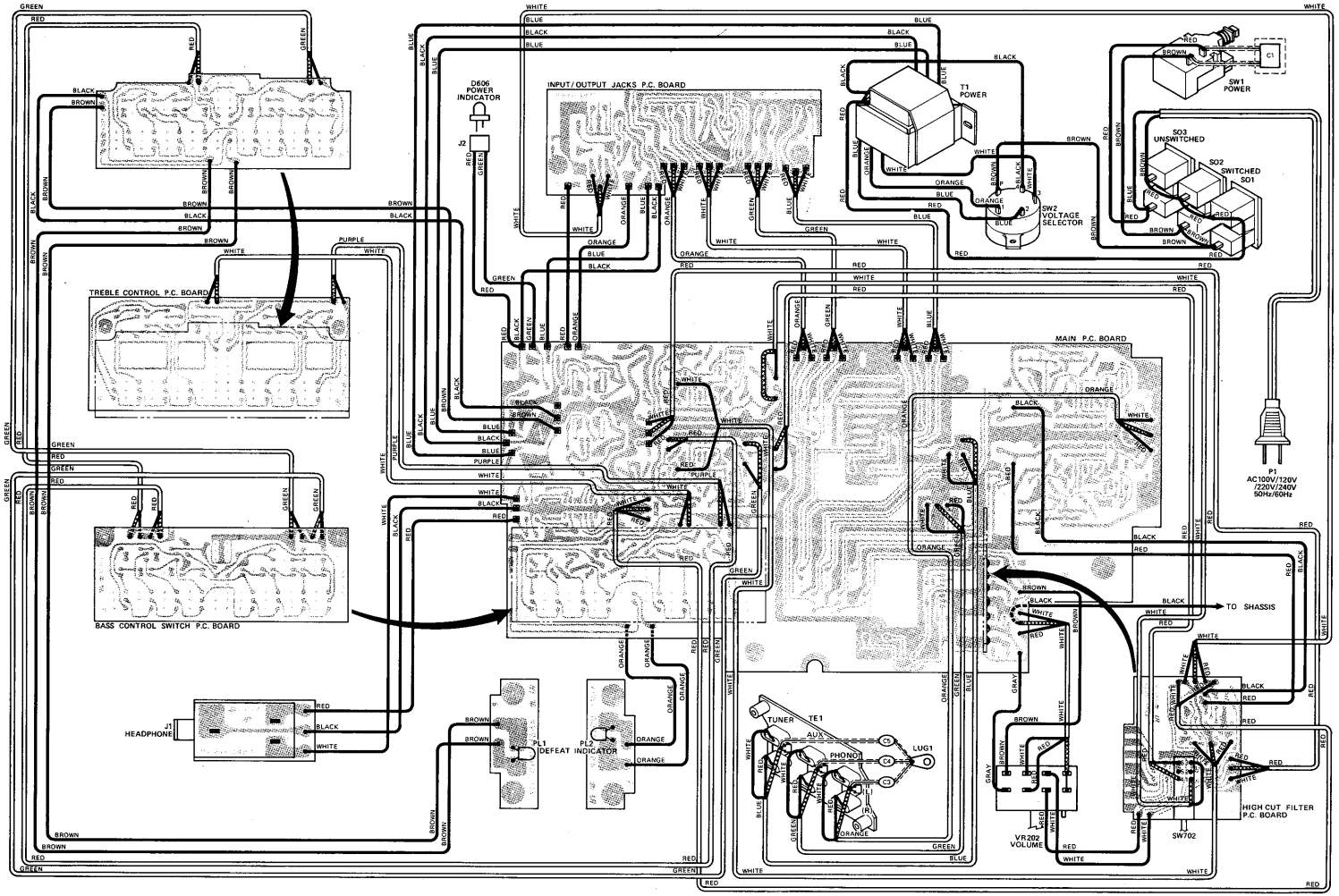

SCHEMATIC DIAGRAM — MODEL hk 725 — 120V ONLY

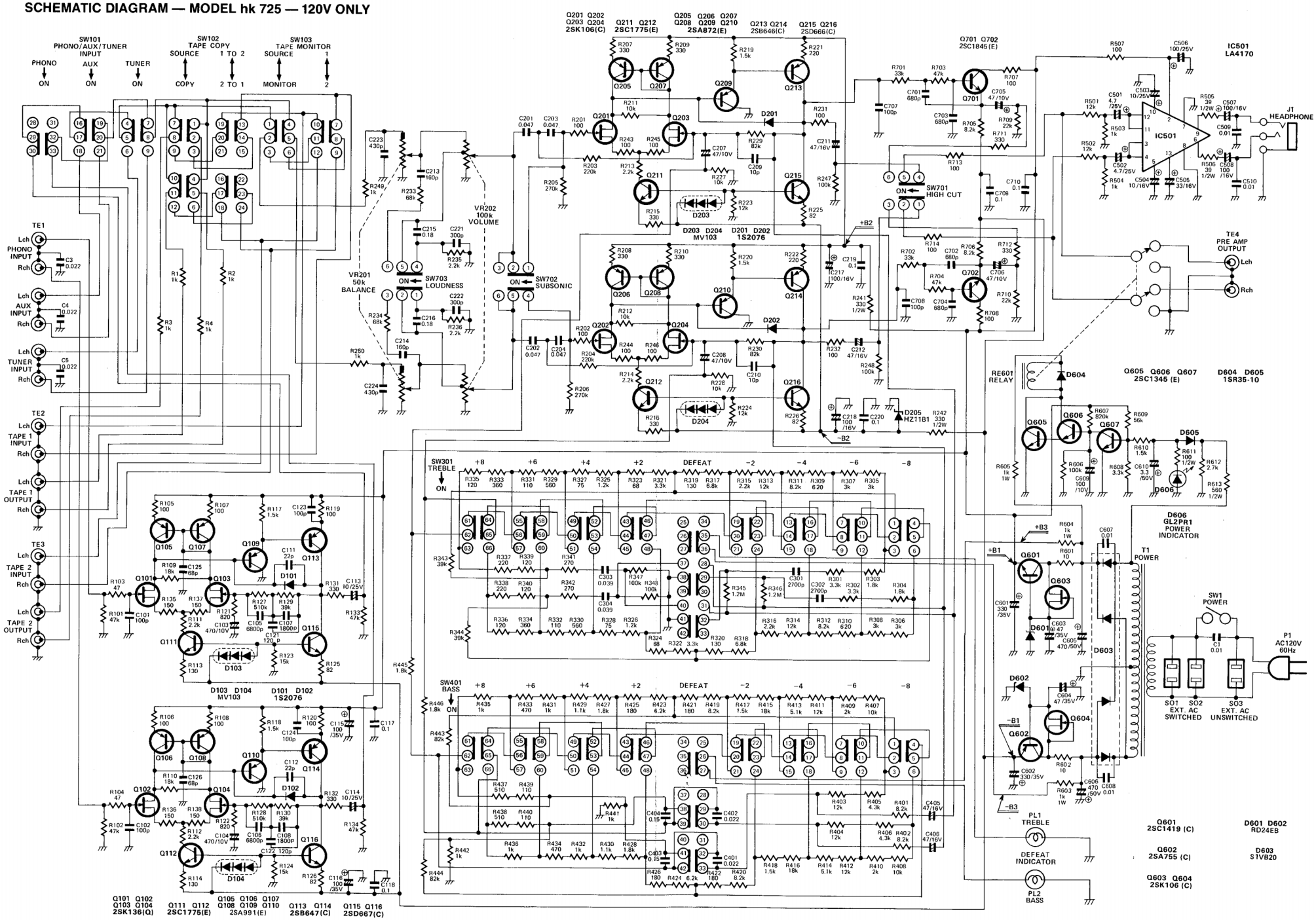

SCHEMATIC DIAGRAM — MODEL hk 725 — 120V ONLY

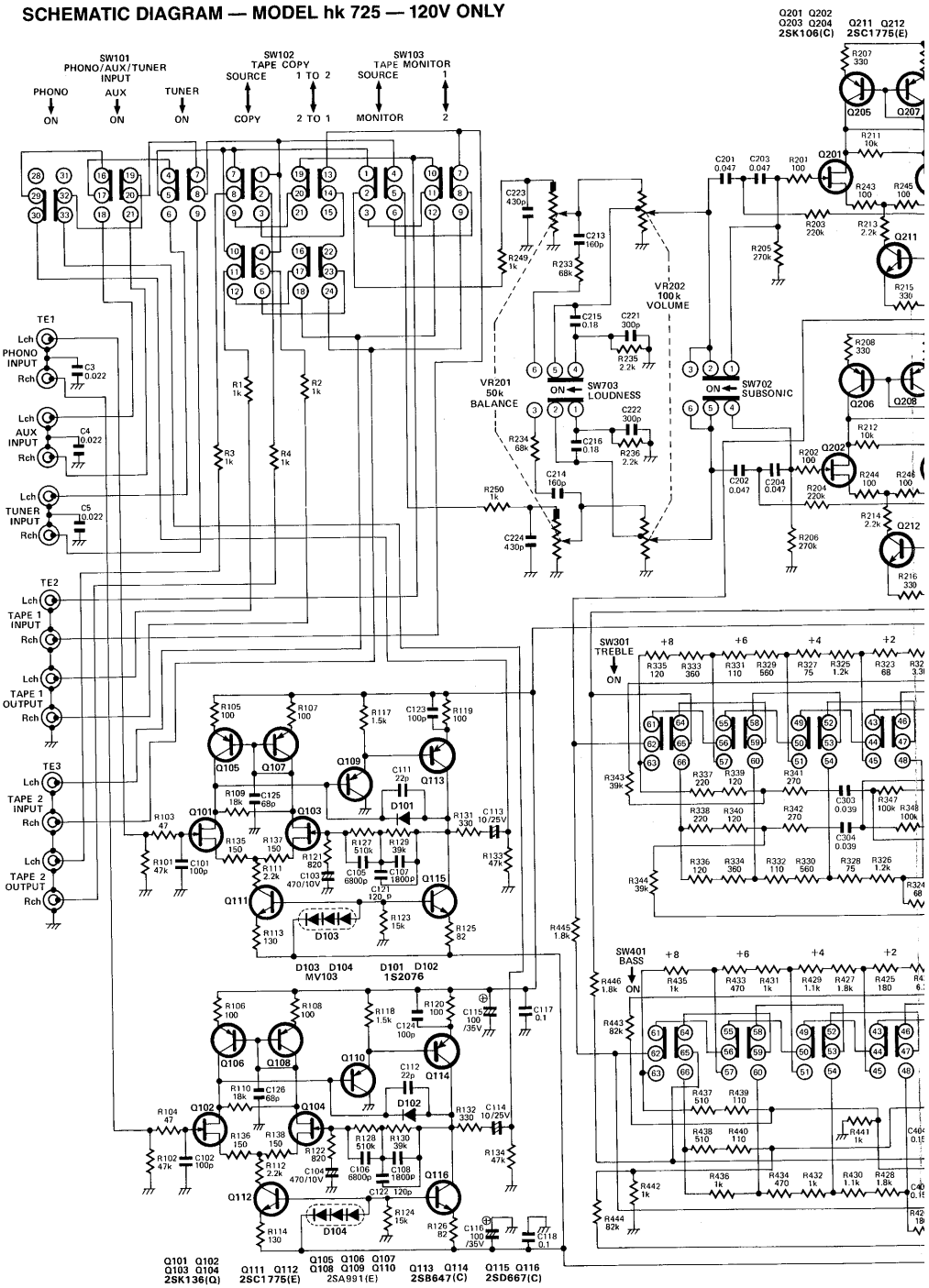

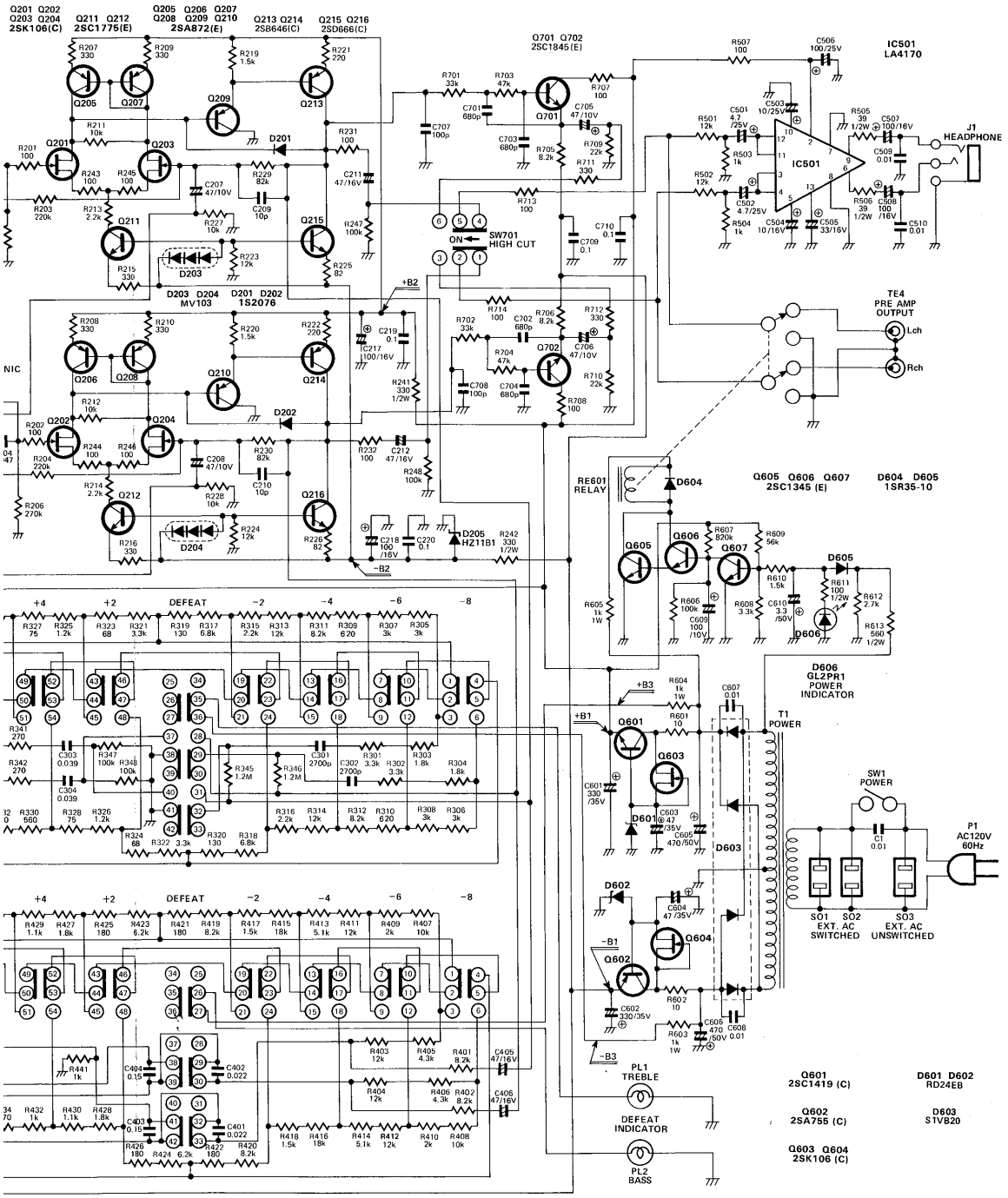
Q201 Q202
Q203 Q204
2SK106(C)
Q211 Q212
2SC1775(E)
Q205 Q206 Q207
Q208 Q209 Q210
2SA872(E)
Q213 Q214
2SB646(C)
Q215 Q216
2SD666(C)
Q701 Q702
2SC1845(E)
IC501
LA4170
J1
HEADPHONE
SW701
HIGH CUT
ON
TE4
PRE AMP
OUTPUT
Lch
Rch
D203 D204
MV103
D201 D202
1S2076
RE601
RELAY
Q605 Q606 Q607
2SC1345 (E)
D604 D605
1SR35-10
D606
GL2PR1
POWER
INDICATOR
T1
POWER
SW1
POWER
P1
AC120V
60Hz
SO1
EXT. AC
SWITCHED
SO2
SO3
EXT. AC
UNSWITCHED
DEFEAT
PL1
TREBLE
DEFEAT
INDICATOR
PL2
BASS
Q601
2SC1419 (C)
Q602
2SA755 (C)
Q603 Q604
2SK106 (C)
D601 D602
RD24EB
D603
S1VB20

SCHEMATIC DIAGRAM — MODEL hk 725 — MULTI VOLTAGE

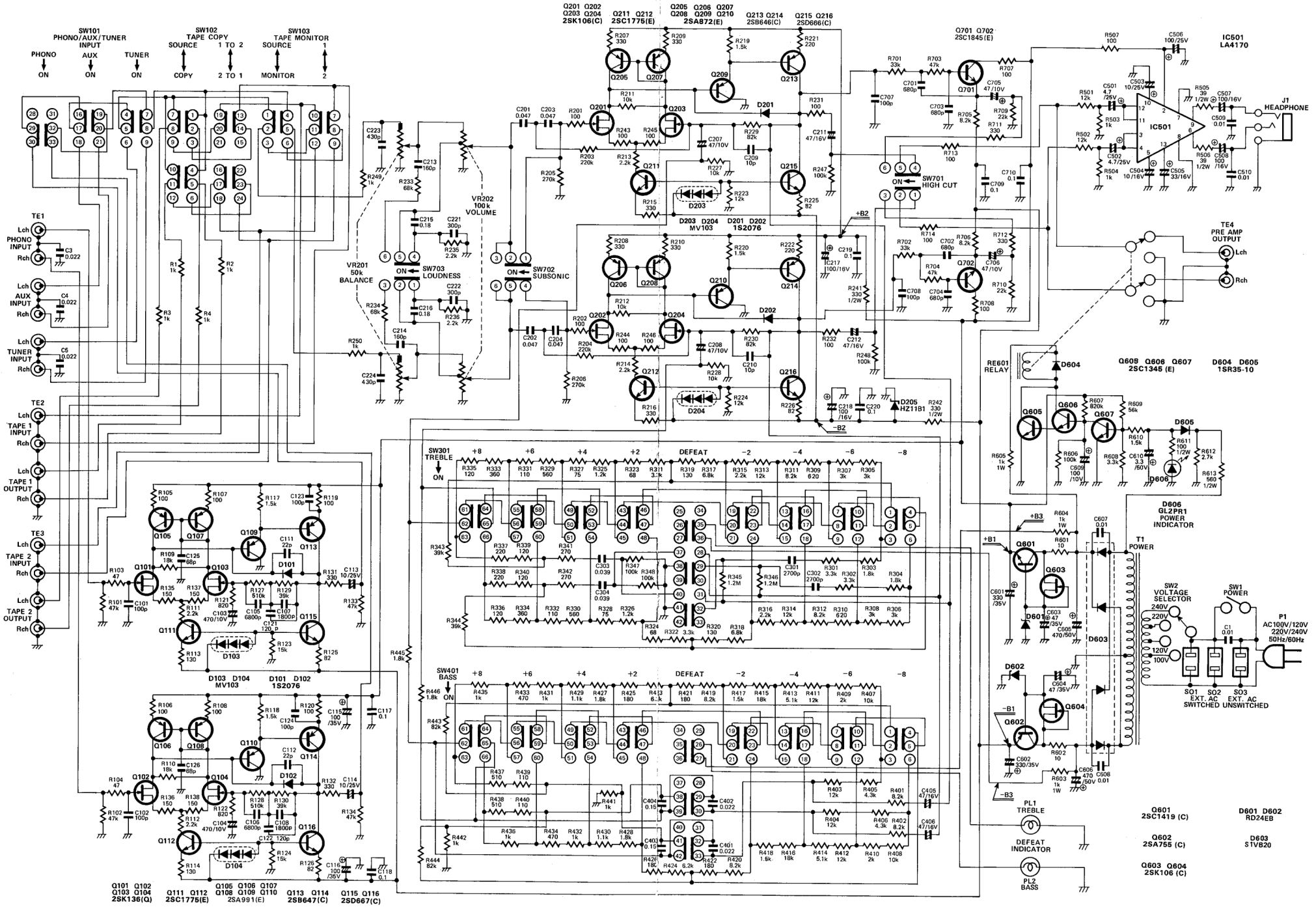

SCHEMATIC DIAGRAM — MODEL hk 725 — MULTI VOLTAGE

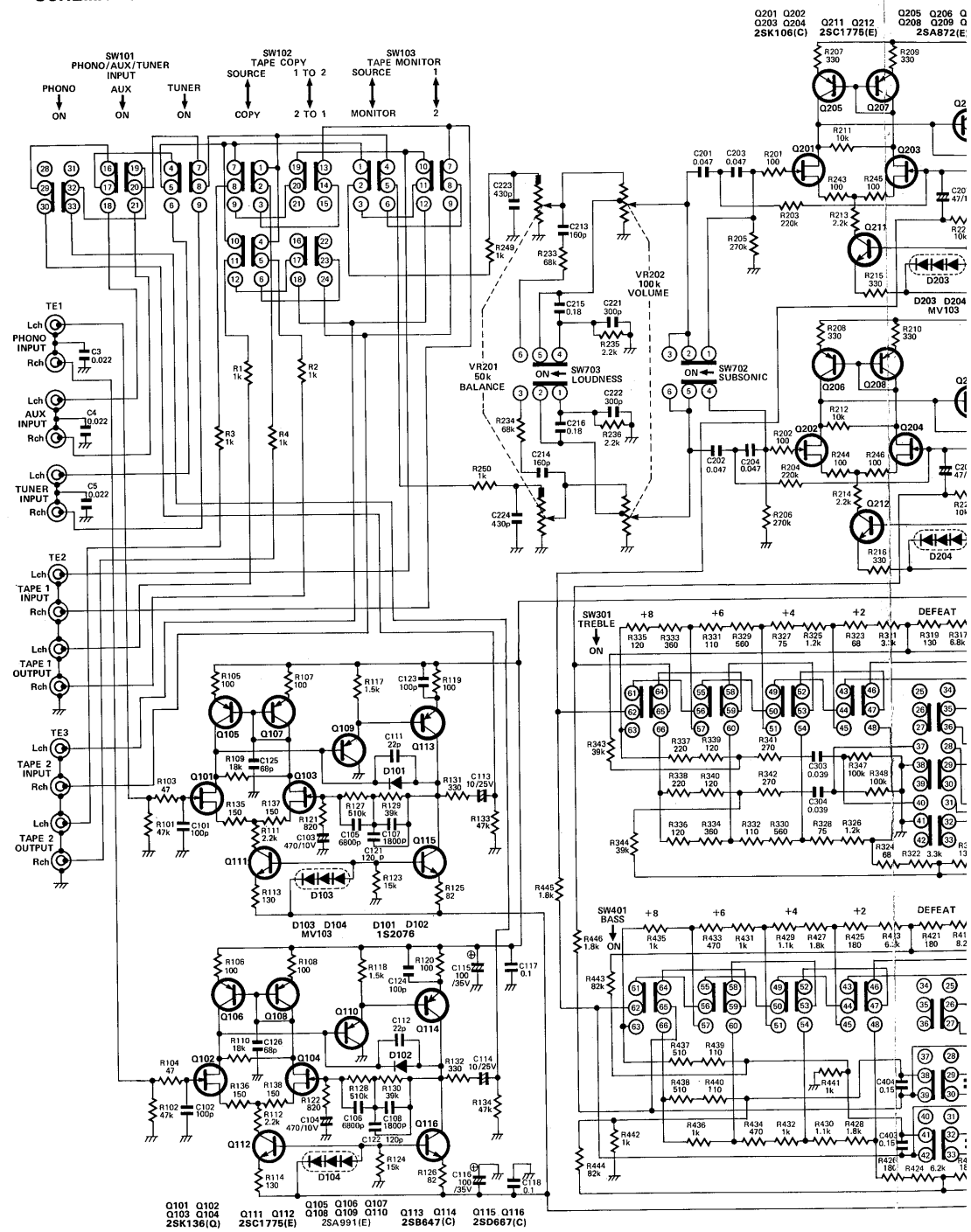

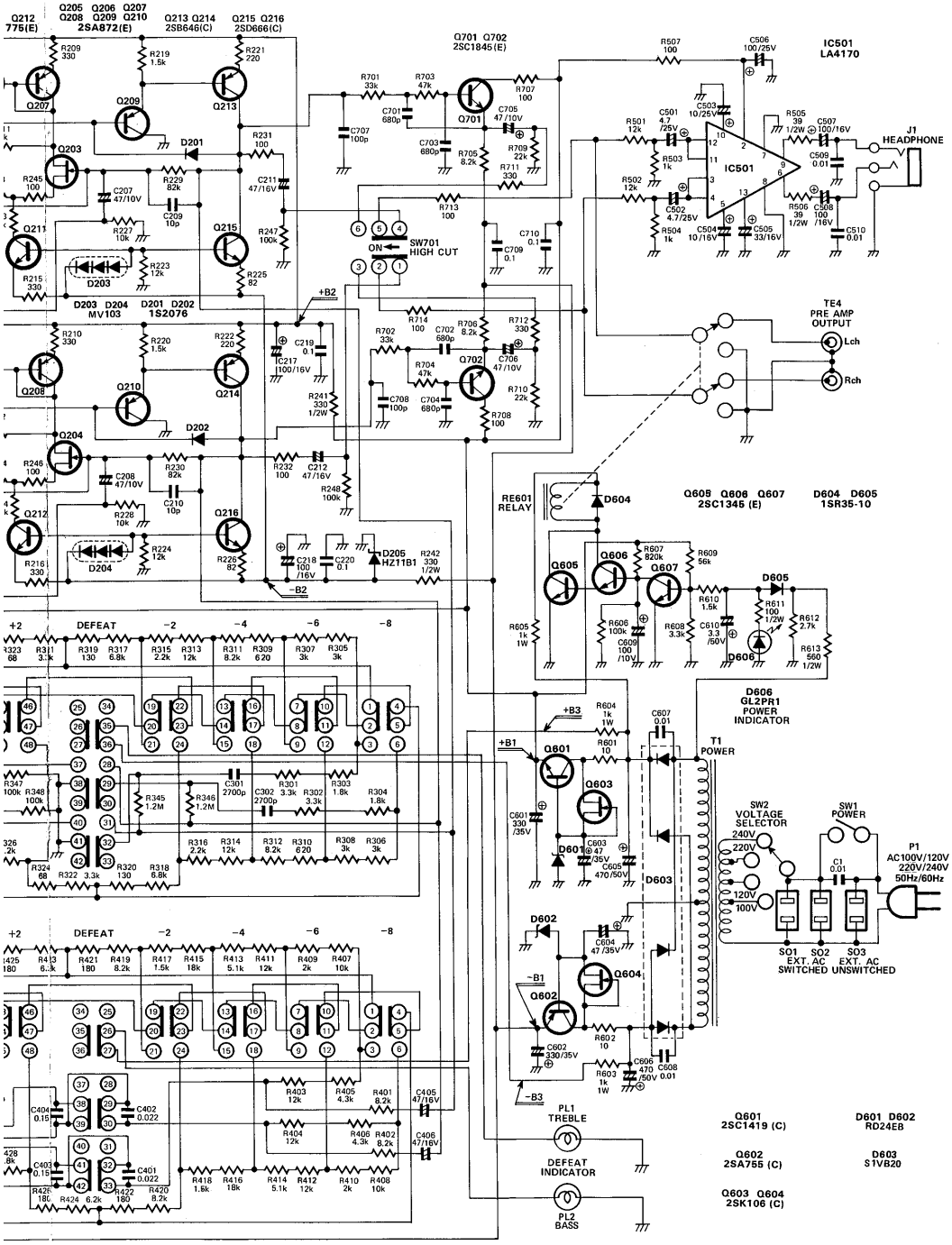
Q212 775(E)
Q205 Q206 Q207 Q208 Q209 Q210 2SA872(E)
Q213 Q214 2SB646(C)
Q215 Q216 2SD666(C)
Q701 Q702 2SC1845(E)
IC501 LA4170
IC501
J1 HEADPHONE
SW701 HIGH CUT
ON
TE4 PRE AMP OUTPUT
Lch
Rch
D201
D202
D203
D204
D203 D204 MV103
D201 D202 1S2076
RE601 RELAY
D604
Q605 Q606 Q607 2SC1345 (E)
D604 D605 1SR35-10
D605
D606
D606 GL2PR1 POWER INDICATOR
DEFEAT
+2
-2
-4
-6
-8
+B1
+B2
+B3
-B1
-B2
-B3
Q601
Q602
Q603
Q604
T1 POWER
SW2 VOLTAGE SELECTOR
240V
220V
120V
100V
SW1 POWER
P1 AC100V/120V 220V/240V 50Hz/60Hz
SO1 EXT. AC SWITCHED
SO2
SO3 EXT. AC UNSWITCHED
PL1 TREBLE
DEFEAT INDICATOR
PL2 BASS
Q601 2SC1419 (C)
Q602 2SA755 (C)
Q603 Q604 2SK106 (C)
D601 D602 RD24EB
D603 S1VB20

PARTS ORDERS WITHIN USA

To speed handling of your order be sure to include both the model and serial numbers, in addition to the quantity, part number and part description of the items ordered. Orders from independent dealers, independent servicemen, and retail customers will be shipped on a cash in advance basis. Harman Kardon reserves the right to substitute equivalent parts for those originally installed in this chassis. All parts should be ordered from Harman Kardon, Inc., 240 Crossways Park West, Woodbury, New York 11797, Att: Parts Department.

PARTS ORDERS OUTSIDE USA

To speed handling of your order be sure to include both the model and serial numbers, in addition to the quantity, part number and part description of the items ordered. Orders from independent dealers, independent servicemen, and retail customers will be shipped on a cash in advance basis. Harman Kardon reserves the right to substitute equivalent parts for those originally installed in this chassis. All parts should be ordered through your local distributor.

harman/kardon

240 CROSSWAYS PARK WEST, WOODBURY, N.Y. 11797
10/80

PRINTED IN USA