ALLEN&HEATH



WARNING – HIGH VOLTAGES

Power Supply Unit (PSU) work should only be carried out by qualified personnel.

We recommend that you use an approved Allen & Heath service centre for all power supply work.

Please contact your local Allen & Heath distributor for more details.

http://www.allen-heath.com/

ALLEN & HEATH

GS3 SERIES

COMPACT RECORDING CONSOLE

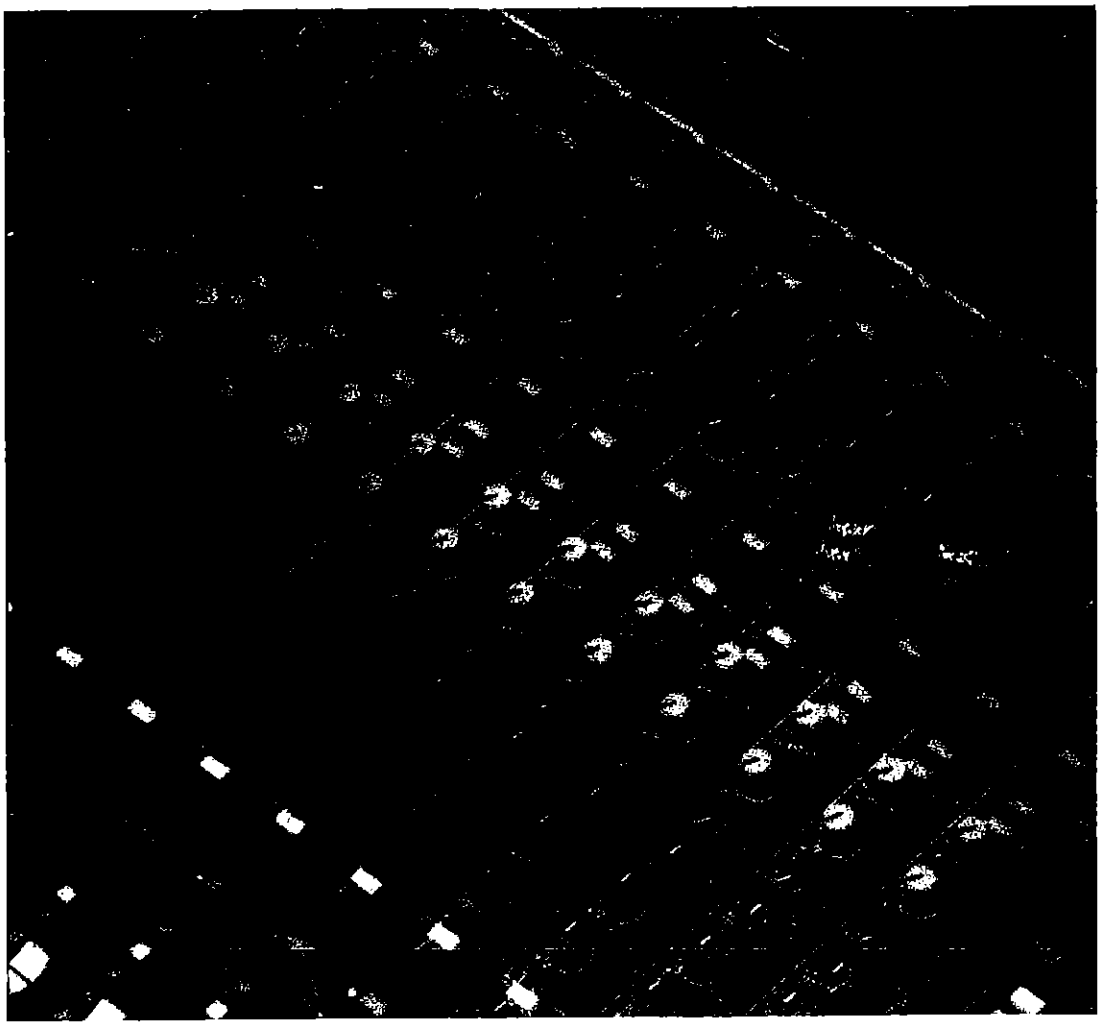

SERVICE MANUAL

Publication AP0123

GS3 SERIES

COMPACT RECORDING CONSOLE

SERVICE MANUAL

About this manual...

This SERVICE MANUAL is for the ALLEN & HEATH GS3 range of compact recording consoles. This manual includes information on both the standard GS3 including upgrades and GS3V consoles, and replaces all previous issues of publication AP0123.

The information presented, is intended for competent technical personnel to carry out service and product support of this range of audio consoles. We assume that the reader is familiar with the relevant electronic theory, audio terminology, and is able to carry out basic servicing, fault-finding, and repair work to studio equipment of this type. Service personnel should also be familiar with studio and mains earthing as well as the power requirements and handling precautions.

Government and insurance underwriters' regulations on safety of electrical equipment must be observed at all times. These regulations take precedence over any suggestions in this manual.

PART A is a reprint of parts of the various OWNER MANUALS for quick reference to important user information. We recommend that you have a copy of the owner manual available for more complete information. This may also assist the service agent in dealing with user related problems. From our experiences with customer problems, most are due to incorrect use or installation of the console and/or connected equipment. This is often due to the customer not reading or misinterpreting the instructions in the owner manual.

PART B provides: technical descriptions, service and fault finding procedures, details on options such as expanding a standard console, and how to order spare parts. The contents of the standard service agent spares kits are also listed.

PART C presents a complete set of electronic circuit diagrams, printed circuit assembly component layout drawings, and the related assembly drawings.

Copyright © ALLEN & HEATH Ltd. 1993.

Publication AP0123 issue 3 November 1993 CD/ ImcB

All trademarks are acknowledged.

CONTENTS

PART A - USER REFERENCE

Sections of the GS3 & GS3V Owner Manual are reprinted here for easy reference during service operations.

INTRODUCTION ..... A 1-3
KEY FEATURES ..... A 1-3
SPECIFICATION ..... A 1-4

GETTING STARTED ..... A 2-1
POSITIONING THE EQUIPMENT ..... A 2-2
CONNECTING THE POWER SUPPLY ..... A 2-2
EARTHING THE AUDIO SYSTEM ..... A 2-3
SAFETY ..... A 2-3
POWER UP CHECK ..... A 2-4
PLUGGING UP THE CONSOLE ..... A 2-4

ABOUT YOUR CONSOLE ..... A 5-1
(control and connector layout and function) ..... to A 5-26

ABOUT **V4** ***PLUS*** MUTE AUTOMATION ..... A 6-1
..... to A 6-9

V4 ***PLUS*** QUICK REFERENCE ..... B 7-1
..... to B 7-3

GS3V V5 AUTOMATION

INTRODUCTION .....

GETTING STARTED ..... A 1-1
..... to A 1-9

FUNCTION KEYS ..... A 6-1
..... to A 6-6

V_EDIT ..... A 8-1
..... to A 8-4

MODES ..... A 9-1
..... to A 9-4

MIDI SPEC ..... A 10-1
..... to A 10-14

GS3V SMPTE MODULE OPTION

INTRODUCTION .....

SPECIFICATION ..... A 1

GETTING STARTED ..... A 5
..... to A 6

MODES ..... A 10

GS3 UPGRADE TO V5 VCA AUTOMATION

INTRODUCTION .....

GETTING STARTED ..... A 1-1
..... to A 1-11

FUNCTION KEYS ..... A 6-1
..... to A 6-2

MODES ..... A 8-1
..... to A 8-3

SMPTE MODULE ..... A 9-1
..... to A 9-2

PART B - SERVICE PROCEDURES

TECHNICAL DESCRIPTION 1

OUTLINE TECHNICAL DESCRIPTION ..... B 1-1
THE AUTOMATION SYSTEM ..... B 1-2

SERVICE PROCEDURES 2

SERVICE NOTE and SAFETY ..... B 2-1
GENERAL SERVICE PRECAUTIONS ..... B 2-2
AUDIO AND DC MEASUREMENTS ..... B 2-3
REPORTING A PROBLEM TO ALLEN & HEATH ..... B 2-3
BLANK FIELD SERVICE REPORT FORM (to copy) .....
SERVICE ACCESS ..... B 2-6
FADER REPLACEMENT ..... B 2-7
CHANNEL VCA FADER REPLACEMENT ..... B 2-8
GS3 EPROM REPLACEMENT (V4 *plus* Software only) ..... B 2-9
GS3V SOFTWARE UPGRADE (V5 software) ..... B 2-10
GS3 UPGRADE EPROM REPLACEMENT (V5 software) ..... B 2-11

11 VCA CALIBRATION ..... B 2-12
METER CALIBRATION ..... B 2-13
COMPONENT AND MODULE REPLACEMENT ..... B 2-13

TROUBLESHOOTING 3

QUICK CONSOLE TEST ..... B 3-2
TROUBLESHOOTING CHART ..... B 3-3
..... to B 3-6

THE POWER SUPPLY 4

SPECIFICATION AND DESCRIPTION ..... B 4-1
AC MAINS and SAFETY ..... B 4-2
CHECKING FOR NORMAL OPERATION ..... B 4-2
TRANSFORMER AND FUSE SETTINGS FOR AC MAINS ..... B 4-3
MPS9 COMPONENT LAYOUT DIAGRAM ..... B 4-4
MPS9 CIRCUIT DIAGRAM .....

OPTIONS 5

PHANTOM POWER DISABLE ..... B 5-1
HI LEVEL MULTITRACK OPTION ..... B 5-2
FITTING THE GS3-X8 EXPANDER ..... B 5-4
FITTING THE GS3V-X8 EXPANDER ..... B 5-8
FOOTSWITCH OPTIONS ..... B 5-13
INSTALLING THE SMPTE OPTION ..... B 5-14
INSTALLING THE GS3 V5 AUTOMATION UPGRADE ..... B 5-18
FITTING THE BALANCED MULTITRACK OPTION ..... B 5-45

ORDERING SPARE PARTS B

ORDERING A CONSOLE ..... B 6-2
ORDERING A REPLACEMENT POWER SUPPLY ..... B 6-2
ORDERING A V5 UPGRADE KIT ..... B 6-2
ORDERING AN OPTION ..... B 6-2
ORDERING AN ASSEMBLY ..... B 6-2
THE CHASSIS TRIM ..... B 6-3
MANUALS AND SUPPORT DOCUMENTATION ..... B 6-3
SOFTWARE UPGRADE (V4 *plus* & V5) ..... B 6-4
SERVICE TOOLS ..... B 6-4
ORDERING A STANDARD SPARES KIT ..... B 6-4
ORDERING A GS3 TOP-UP SPARES KIT ..... B 6-4
CONSOLE SPARES LIST ..... B 6-4
MPS9 SPARES LIST ..... B 6-6
ORDERING A GS3V TOP-UP SPARES KIT ..... B 6-7

GS3 PARTS STRUCTURE DRAWING D111 ..... B 6-8

GS3V PARTS STRUCTURE DRAWING D151 ..... B 6-9

GS3 V5 UPGRADE PARTS STRUCTURE DRAWING ..... B 6-10

MB8 BALANCED MULTITRACK OPTION PARTS STRUCTURE ..... B 6-11

PART C - TECHNICAL DIAGRAMS

Includes block schematics, circuit diagrams, component layouts and assembly drawings.

TECHNICAL BULLETINS

COMPONENT REFERENCE

GS3 CONTROL PANEL
GS3V CONTROL PANEL
GS3 V5 VCA AUTOMATION CONTROL PANEL

BLOCK DIAGRAM ..... D112 sheet 1
BLOCK DIAGRAM ..... D112 sheet 2

BLOCK DIAGRAM ..... D112 sheet 3
BLOCK DIAGRAM ..... D112 sheet 4

GS3 INTERNAL LAYOUT D120
GS3V INTERNAL LAYOUT D213

IO CHANNEL LAYOUT FW030D
IO CIRCUIT D113

GROUP LAYOUT WIRING FW031D
GROUP CIRCUIT D114

MASTER LAYOUT FW032D
MASTER CIRCUIT ..... D115 sheet 1

MASTER CIRCUIT ..... D115 sheet 2
4-JACK CIRCUIT & LAYOUT ..... D119 and FW029D

MASTER WIRING DIAGRAM (GS3 only) D136
SLAVE CIRCUIT & LAYOUT ..... D118 and FW034D

MICRO LAYOUT (GS3 only) FW033D
MICRO CIRCUIT (GS3 only) D117

BARGRAPH METER LAYOUT FW026D
BARGRAPH METER CIRCUIT D116

CHANNEL VCA LAYOUT FW037D
CHANNEL VCA CIRCUIT D144

VCA SLAVE LAYOUT FW036D
VCA SLAVE CIRCUIT D143

GS3V KEYBOARD LAYOUT (including GS3 UPGRADE) FW916D
GS3V KEYBOARD CIRCUIT (including GS3 UPGRADE) ..... D929 sheet 1
D929 sheet 2
D929 sheet 3

GS3 V5 VCA UPGRADE KEYBOARD LAYOUT FW916DU
GS3 V5 VCA UPGRADE KEYBOARD CIRCUIT ..... D931 sheet 1
D931 sheet 2
D931 sheet 3

V MICRO LAYOUT FW914D
V MICRO CIRCUIT ..... D928 sheet 1
D928 sheet 2

V PROM CIRCUIT & LAYOUT D930
and FW915D

GS3V MASTER WIRING D208A
GS3V V_MICRO & KEYBOARD WIRING D208B

GS3 V5 VCA UPGRADE V_MICRO & KEYBOARD WIRING D208BU
SMPTE OPTION CIRCUIT & LAYOUT D212
and FW044D

BALANCED MULTITRACK OPTION CIRCUIT & LAYOUT D209
and FW043D

INTRODUCTION 1

The ALLEN & HEATH **GS3** series of ultra-compact professional audio mixing consoles is designed specifically to operate with the latest generation of multitrack tape machines and studio equipment.

The standard **GS3** features full on-board mute automation with built in sequencer, MIDI interface and programmable LEARN KEY facility. The **GS3V** adds VCA fader level automation and optional SMPTE interface.

The in-line format and versatile routing facilities allow up to 32-track recording and mixdown to two 2-track mastering machines without the need for re-patching. Both the 16 and 24 channel models are expandable to the full 32 channels if required. Four dedicated stereo effects returns and the two signal paths per channel provide a maximum of 40, 56 or 72 inputs all with EQ available for mixdown.

Your **GS3** benefits from the latest audio engineering technology as found in top of the range consoles costing many times the price. You can be sure that the sound quality of your original source will be preserved.

FEATURES:

- Advanced automation of fader levels and/or mute switching,
- 16-8-16-2 or 24-8-24-2 standard formats expandable to 32 channels,
- 8 groups normalled to channel outputs 1-8, 9-16, 17-24, 25-32,
- Up to 72 inputs each with EQ available for mixdown,
- In-line monitoring,
- Channel direct-to-tape switches allow up to 32 tracks to be recorded simultaneously,
- Separate EQ for channel and monitor paths, with EQ in/out switch,
- 6 aux busses providing effects and cue sends,
- Dedicated stereo cue monitor output with talkback,
- 4 stereo effects returns with EQ, cue sends and routing to all outputs,
- Monitoring and record source switching for two 2-track mastering machines allowing dubbing from one to the other,
- Dedicated stereo control room monitor output with switching for 2 pairs of loudspeakers.
- LED bargraph metering and separate channel peak LEDs,
- Inserts for signal processing on channels, groups and stereo mix,
- Comprehensive monitor and talkback facilities,
- 2 frequency line-up oscillator,
- 100mm faders and quality components used throughout,
- Superior audio performance, engineered for reliability.

SPECIFICATION

Figures quoted are typical of the 16 channel GS3
0dBu = 0.775Vrms, 0dBV = 1Vrms
0VU = normal operating level (reading "0" on the meters)

OPERATING LEVELS: Multitrack in/out -10dBV
2-track in/out -10dBV
FX, cue out etc. 0dBu normal line level
Inserts 0dBu normal line level

FREQUENCY RESPONSE: 20Hz to 20kHz +0dB, -1dB

NOISE: Measured rms 22Hz to 22kHz
Microphone EIN -127 dBu source = 150 ohm
LR Mix noise -80 dB ref 0VU
Group mix noise -80 dB ref 0VU

CROSSTALK: better than -80dB at 1kHz

DISTORTION: THD typically less than 0.008% at 1kHz
less than 0.02% at 10kHz

GAIN: Mic input variable from +10dB to +70dB
Line input variable from -10dB to +20dB
further +10dB available at each fader

MAXIMUM OUTPUT LEVEL: +21dBu into 2k ohms min.

CONSTRUCTION:
Single steel front panel and base plate with Medite side trims. Large extruded aluminium armrest incorperating carrying handle and pen slot / write-on strip. Extruded aluminium rear member incorperating lifting lip. Multiple circuit assemblies connected by removable IDC harnesses for easy service access. Separate stand alone MPS9 external power supply unit. X8 expander attaches on right hand side of console to expand it by 8 channels to a maximum of 32 channels.

For size and weight please refer to the section **Getting Started.**
For connector details refer to the section **About Your Console.**

GETTING STARTED 2

THE PACKING

Your console has been shipped in a purpose designed box to protect it from damage. Please keep this packing and ensure that the console and power supply are correctly repacked should you need to ship them in the future. Before starting check the contents list on the packing diagram which is enclosed with the console.

WARRANTY REGISTRATION

To ensure proper validation and handling of warranty services please complete and return the WARRANTY REGISTRATION CARD enclosed to Allen & Heath. Keep a log of the console and power unit serial numbers and quote these in any communication regarding this product.

LOOKING AFTER YOUR CONSOLE

To preserve the working life and looks of your console please observe these simple precautions:

CLEANING: Use only a clean damp cloth and soft brush. Avoid the use of chemicals, abrasives and solvents. To remove stubborn marks (such as chinagraph pencil) isopropyl alchohol may be used.

LUBRICATION: The faders, switches and potentiometers are lubricated for life. The use of electrical lubricants on these parts is not recommended.

DIRT, DUST, SMOKE and MOISTURE: Prevent damage to the moving parts such as faders and potentiometers, and to the cosmetics by avoiding drinks spillage, tobacco ash and smoke, and exposure to rain and condensation.

HEAT and VIBRATION: Avoid storing, transporting or operating your console in conditions of excessive heat or cold, or where it may be subject to excessive vibration or mechanical shock.

Treated with care your console should continue to give you trouble-free and reliable operation.

POSITIONING THE CONSOLE AND POWER UNIT

WEIGHT:

GS3-16 = 18kg
GS3-24 = 24kg
MPS9 = 3kg

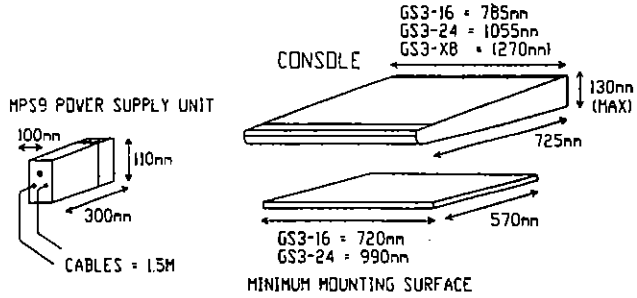

POSITIONING THE CONSOLE:

Your console is designed for table-top mounting. Use a sturdy flat surface of at least the dimensions shown above. The top panel connectors allow the console to be pushed up against a wall if space is limited.

Make sure the console is positioned to avoid excessive vibration, moisture, condensation, or extremes of temperature.

POSITIONING THE POWER SUPPLY:

The MPS9 power supply is a free-standing unit which is best positioned at least 1 metre away from the console to avoid introducing mains hum into the sensitive audio circuits.

Allow space around the unit for ventilation. As with most power units the MPS9 runs warm and is cooled by air flow across its heatsinks. Do not cover the MPS9 or restrict the air flow around the unit.

CONNECTING THE POWER SUPPLY

Connect your GS3 console only to the ALLEN & HEATH power supply unit which is included. The standard unit for the GS3 is the MPS9.

The power unit mains lead should only be connected to your local AC mains supply of 50/60Hz.

Check the power unit label for the correct AC mains voltage setting.

If your power unit is not supplied with a fitted mains plug carefully connect an approved mains plug observing the following standard colour coding:

BROWN = LIVE
BLUE = NEUTRAL
GREEN/YELLOW = EARTH (GROUND)

EARTHING THE AUDIO SYSTEM

Earthing/grounding in an audio system is provided for two purposes:

1. **SAFETY** - prevention of electric shock

2. **SHIELDING** - prevention of external electrical interference causing noise on the wanted audio signal.

In addition to preventing problems, earthing can also cause them. If there are multiple earth paths within the system then an ''earth loop'' may result. This causes interference on the audio signal which is usually heard as a low frequency background hum or buzz.

The preferred method to prevent earth loop problems is to earth all pieces of equipment separately to a good noise-free "star point" mains earth, and to break potential earth loops by connecting the screens of audio cables to earth at one end only. If excessive RF interference is present this may be reduced by linking the disconnected screen to earth through a small capacitor, typically 0.01 microfarad.

SAFETY !

Mains electricity is dangerous and can kill. Mains voltage is present within the power unit but not the console itself. Check your mains wiring and earthing before switching on.

The purpose of the "earth" (ground) connection in a mains supply system is for the prevention of electric shock from the high voltages present. It is usual for the cases of mains powered equipment to be connected to earth to prevent the metal parts becoming "live" and causing electric shock. Some are "double insulated" and do not need this. Your power supply must be connected to a suitable mains earth through its mains cable green/yellow wire.

The power supply case earth is not connected to the console earth. Your console should be connected via a different path to earth. This is done through the audio system cables in a way that avoids interference due to earth (ground) loops. Check your system with a meter to ensure continuity from all equipment to mains earth before switching on.

Equipment will continue to work if it is not earthed. This does not mean that it is safe. GOVERNMENT AND INSURANCE UNDERWRITERS ELECTRICAL CODES MUST BE OBSERVED. These codes take precedence over any suggestions in this manual.

POWER UP CHECK

We recommend that you carry out this brief ''confidence test'' before installing the rest of your system.

1. Plug the 5-pin power unit connector into the console **DC INPUT** socket.
2. Switch on AC power and check that the console display reads ''0''. You may notice the bargraph displays and console LEDs flash briefly as the power rails stabilise. This is quite normal.
3. Set the eight **GROUP FADERS** to position ''0''.
4. Press the **OSC TO GROUPS** switch in the right hand master section and raise the **OSC LEVEL** control. You should see the bargraph meter columns illuminate as you turn the control.
5. Plug in your headphones (under the armrest near the master section), press a **GROUP PFL** switch and raise the **CONTROL ROOM LEVEL** control. You should now hear a 1kHz sinewave tone.
6. Toggle each **MUTE SWITCH** in turn checking that the LEDs light correctly.

This checks that the power unit and console are operating correctly. You should now continue with the installation.

PLUGGING UP THE CONSOLE

Refer to the section **About your console** to familiarise yourself with the function and interfacing requirements of each section of your console before plugging up. If you are unsure of what to plug where or the terms referred to please read the section **Installation Basics** first.

Use audio connectors and cables only for the purpose intended. Avoid connecting the console to circuits which include DC voltages or AC voltages other than low power audio signals. Do not connect the output of power amplifiers directly to the console.

Make sure that the equipment you are connecting your console to is correctly earthed.

Avoid running audio cables close to power units, mains or computer cables and equipment. In particular, do not place computer VDU monitors next to the console or audio cables as this may cause audible interference or buzz.

We suggest that you set all the faders, gain and level controls to the off (minimum) position first to prevent possible damage to your loudspeakers or ears as you connect up the system.

ABOUT YOUR CONSOLE

5

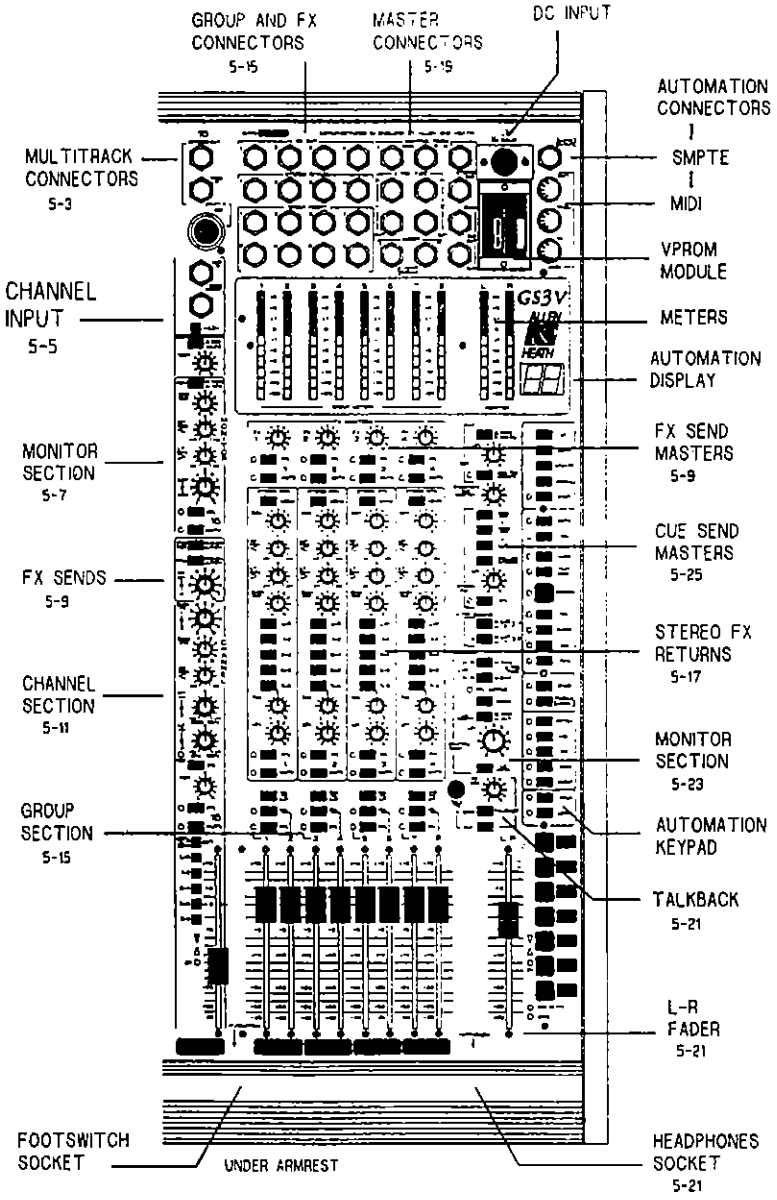

CONNECTING YOUR MULTITRACK

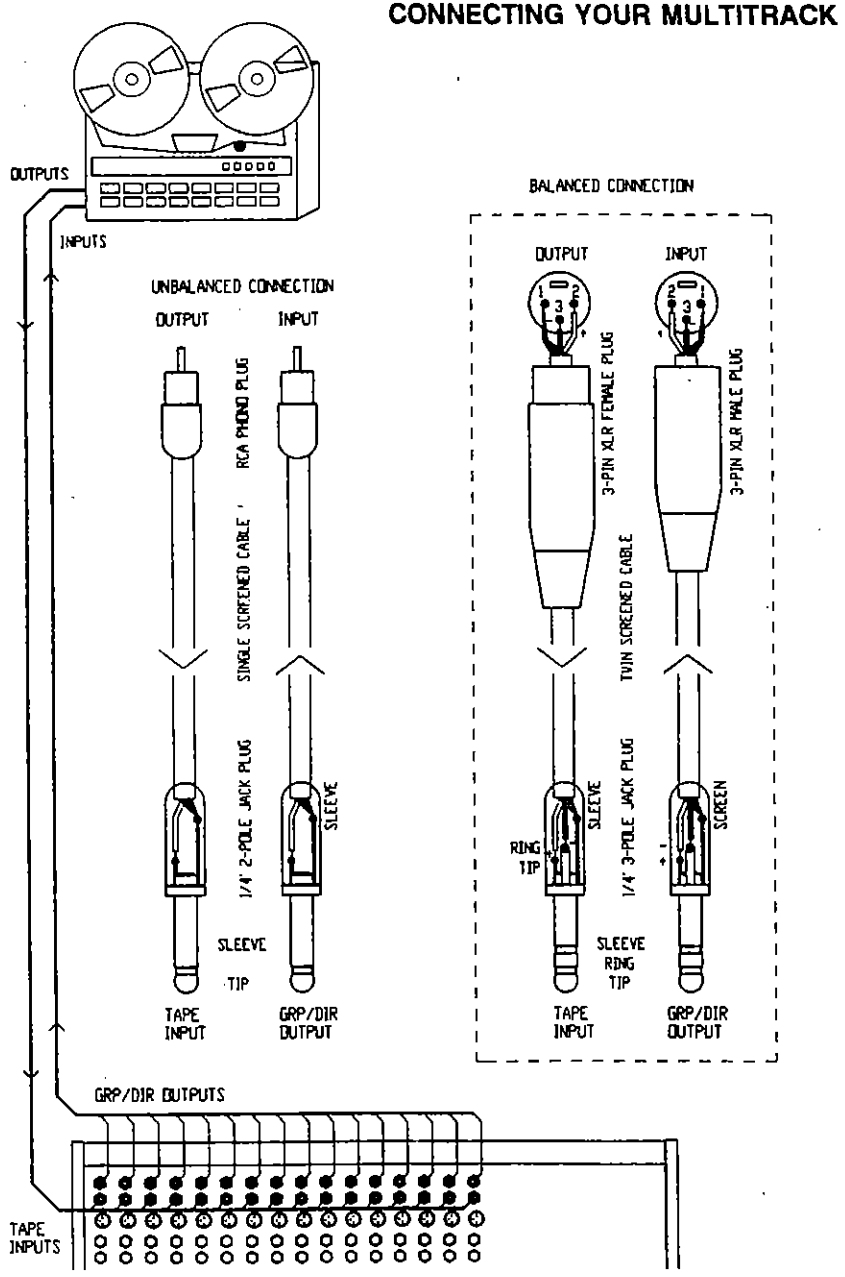

MATCHING THE CONSOLE TO YOUR MULTITRACK

The GS3 Series console is factory set for operation with low level (-10dBV) multitrack recorders. For operation with high level (+4dBu) recorders please refer to the section **OPTIONS AND EXTRAS.** For correct cable type refer to your multitrack owner manual.

GRP/DIRECT OUTPUT 1/4" 3-pole A-gauge jack socket to connect the console output to your multitrack recorder input. This output may be switched to send either the CHANNEL post-fader (direct) signal, or the related one of eight groups as shown in TABLE 1.



unbalanced output
tip = + (signal)
ring = - (ground)
sleeve = 0V (ground)
Output Impedance < 50 ohms low
Nominal level = -10dBV low operating level

TAPE IN 1/4" 3-pole A-gauge jack socket to connect your multitrack recorder output to the console input. Connect each track to its corresponding console channel number.



unbalanced input
tip = + (signal)
ring = - (ground
sleeve = 0v (ground)
Input Impedance = 15k ohm
Sensitivity = -10dBV low operating level

TABLE 1.

Console	Group	Multitrack
1	1	1
2	2	2
3	3	3
4	4	4
5	5	5
6	6	6
7	7	7
8	8	8
9	1	9
10	2	10
11	3	11
12	4	12
13	5	13
14	6	14
15	7	15
16	8	16
17	1	17
18	2	18
19	3	19
20	4	20
21	5	21
22	6	22
23	7	23
24	8	24
25	1	25
26	2	26
27	3	27
28	4	28
29	5	29
30	6	30
31	7	31
32	8	32

MULTITRACK CONNECTORS

These connectors interface the console to your multitrack recorder.

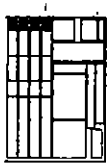

PLUGGING UP THE SOURCE

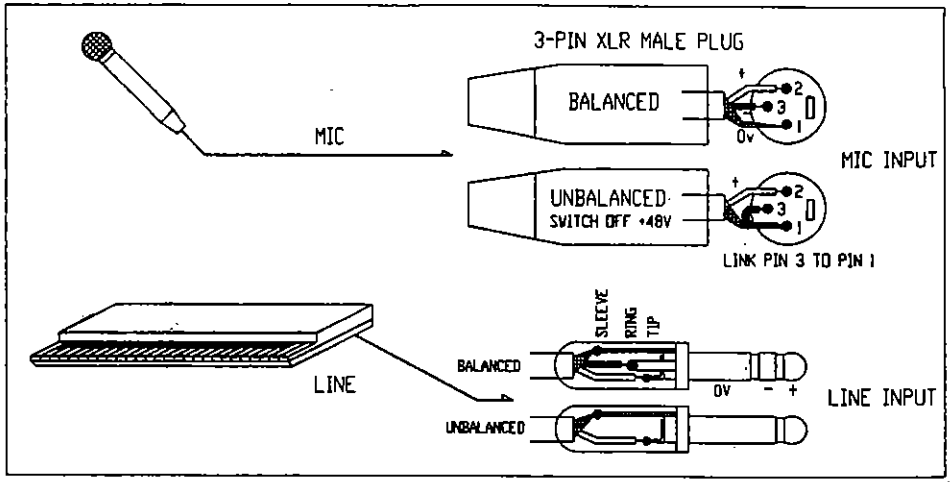

INSERTING AN EFFECT

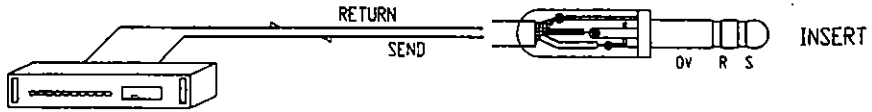

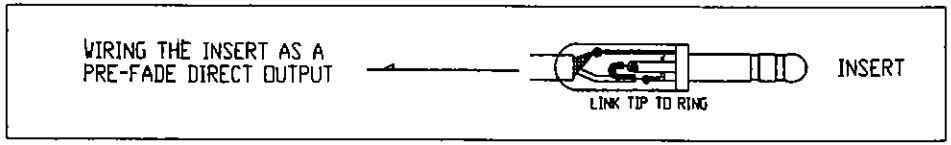

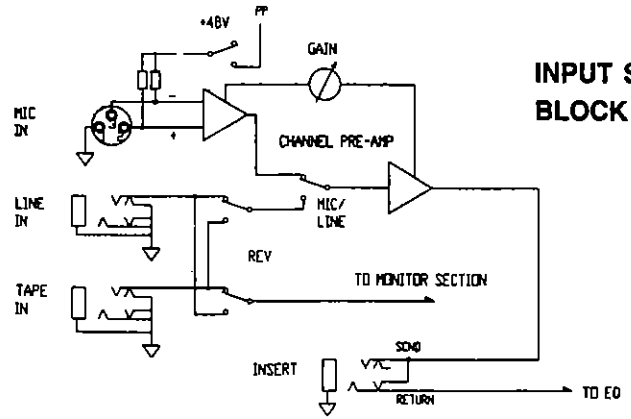

INPUT STAGE BLOCK DIAGRAM

MICROPHONE INPUT 3-pin Female XLR to connect low impedance low level (mic) signals into the channel.

pin 2 = + (hot) electronically balanced
pin 3 = - (cold)
pin 1 = 0V (ground)
Input impedance = 2k ohm
Sensitivity = -68dBu to -9dBu

LINE INPUT 1/4'' 3-pole A-gauge jack socket to connect high level (line) signals into the channel. Will accept balanced or unbalanced signals.

tip = + (signal) unbalanced
ring = - (ground)
sleeve = 0v (ground)
Input Impedance = 15k ohm
Sensitivity = -20dBu to +10dBu

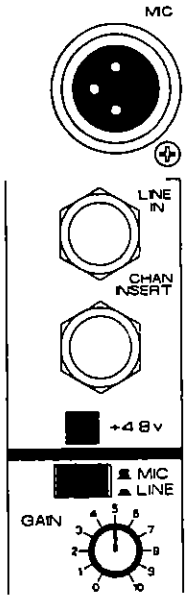

CHANNEL INSERT 1/4'' 3-pole A-gauge jack socket break point to insert signal processing devices into the channel audio path. With nothing plugged in the send is internally connected to the return.

tip = send (from the channel pre-amp stage)
ring = return (to the channel Equaliser stage)
sleeve = 0V (ground) Nominal level = 0dBu

PHANTOM POWER (+48v) Switches the internal +48V phantom power to the MIC input connector. Use only with balanced microphones requiring powering. Always switch this off (up position) when plugging or unplugging microphones.

MIC/LINE Selects the LINE input when pressed, or the MIC input when released, as the source to the channel pre-amp stage. The TAPE input becomes the source if both the LINE and REV switches are pressed.

GAIN Adjusts the sensitivity of the input pre-amp stage to match the input signal level to the normal operating level of the console. Use the console PFL system to check for correct gain setting.

MIC sensitivity = -68dBu to -9dBu
LINE sensitivity = -20dBu to +10dBu

CHANNEL INPUT SECTION

This is the input pre-amplifier stage that you use to select and match the input source to the CHANNEL signal path.

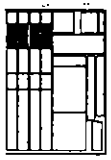

MONITOR EQUALISER RESPONSE

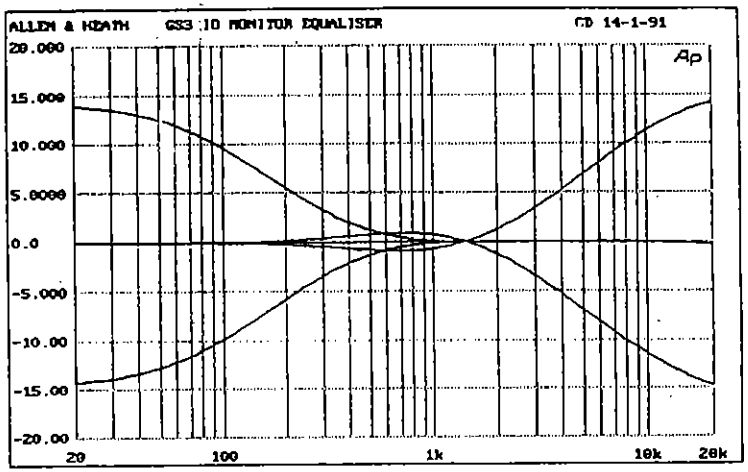

MONITOR STAGE BLOCK DIAGRAM

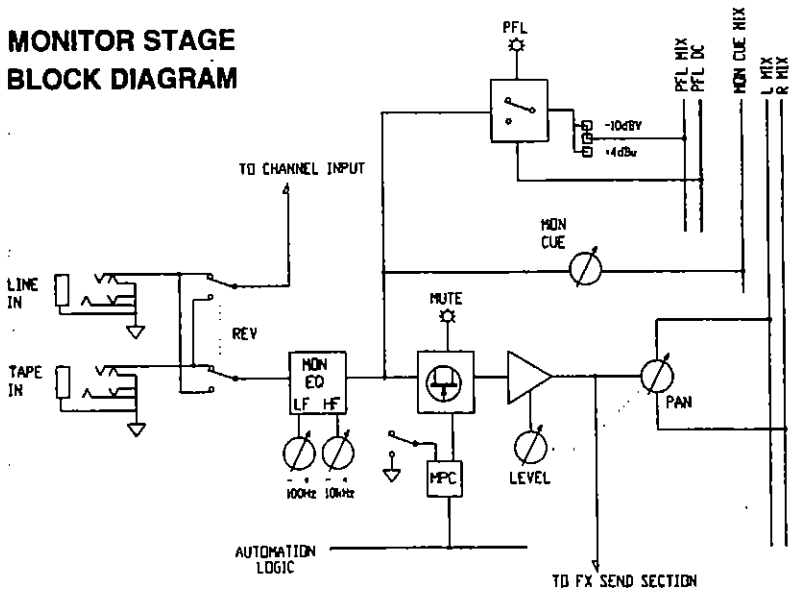

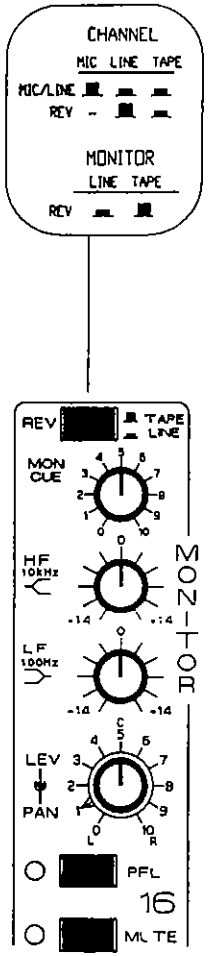

REV Reverses the LINE and TAPE inputs allowing you to route the multitrack tape return through the CHANNEL path and use the MONITOR path for additional line inputs during the mixdown process. The selected source for both paths is as shown here at left.

MON CUE Adjusts the level of pre-fade pre-mute programme being sent from the MONITOR path to the MONITOR CUE buss. This allows you to create a dedicated monitor foldback mix.

HF Provides high frequency (treble) cut and boost in the MONITOR path. Flat response at centre click position.

+/-14dB 10kHz shelving equaliser

LF Provides low frequency (bass) cut and boost in the MONITOR path. Flat response at centre click position.

+/-14dB 100Hz shelving equaliser

LEV/PAN The top control adjusts the MONITOR signal level in the stereo (L-R) mix. The lower control adjusts the position within the stereo image. This sends equal signal to left and right at the centre click position.

PFL Allows the pre-fade MONITOR signal to be checked through the control room output or headphones without interrupting the recorded programme. The signal level is displayed on the L and R meters.

MUTE This momentary action switch toggles the MONITOR signal off (muted, LED on) or on. Switches the signal to the stereo (L-R) mix and FX sends but not the cue system. The mute is controlled by the console computer memory system providing a high degree of mute automation.

MONITOR SECTION

This is the smaller of the two channel input paths, normally used during multitrack overdubbing to monitor the tape return signals, and during mixdown for additional line inputs such as effect returns to the stereo mix.

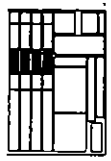

PLUGGING UP AN EFFECT

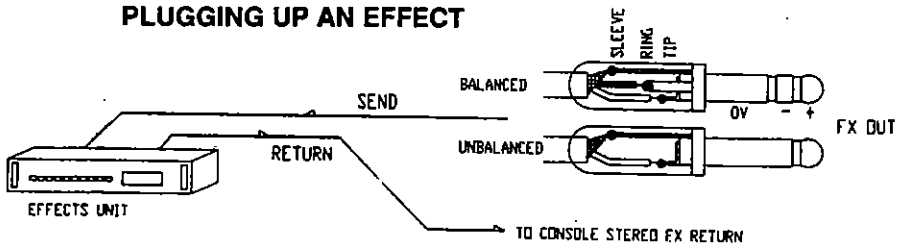

CHANNEL EFFECTS SEND SWITCHING

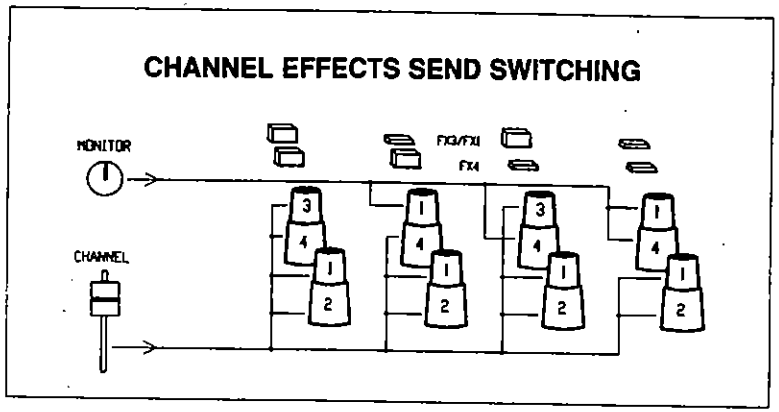

FX SYSTEM BLOCK DIAGRAM

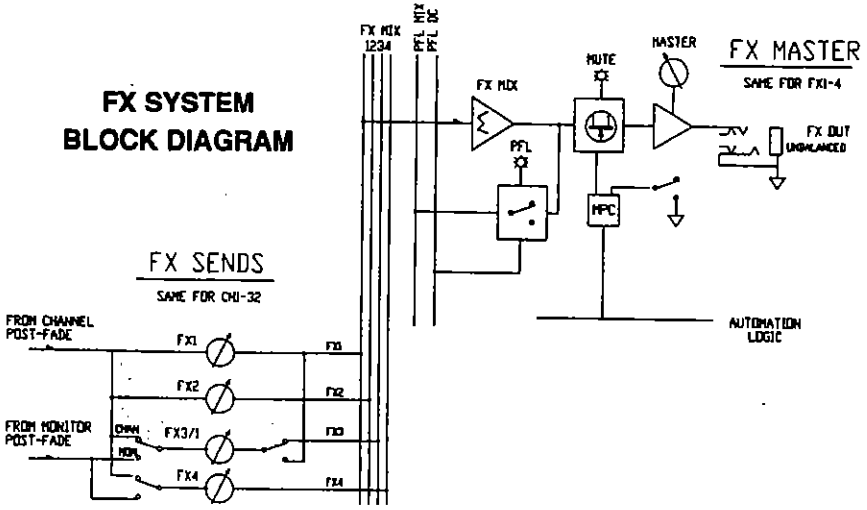

FX OUT 1/4" 3-pole A-gauge jack sockets to connect the post-fade FX mix (1 to 4) to external line level effects or signal processing devices.

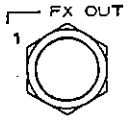

tip = + (signal) unbalanced
ring = - (ground)
sleeve = 0v (ground)
Output Impedance < 50 ohms low
Nominal level = 0dBu

FX MASTER LEVEL Four controls adjust the final output level of the FX mix to external effects devices.

PFL Allows the pre-level FX mix signal to be checked through the control room output or headphones without interrupting the recorded programme.

MUTE This momentary action switch toggles the FX output signal off (muted, LED on) or on. The mute is controlled by the console computer memory system allowing creative effects automation.

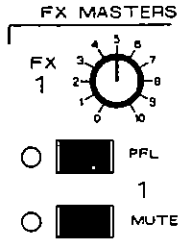

FX SWITCHING Two switches enable you to source the FX sends from the CHANNEL and MONITOR post-fade signals as you require. This flexible system allows both signal paths to access FX1 making it ideal for your primary effects unit such as a reverb. The monitor source may be switched to FX4 giving it a dedicated effects send, or all four effects may be switched into the CHANNEL path. Refer to the diagram opposite.

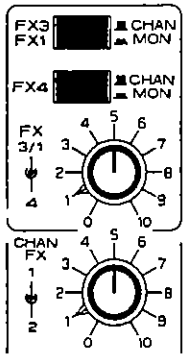

FX3/1,4 SENDS This dual-concentric control adjusts the individual send levels as selected using the above switches.

FX1,2 SENDS These controls adjust the CHANNEL post-fade signal level to FX1 (top control) and FX2 (lower control).

FX (EFFECTS) SENDS

You may create up to four different post-fade mixes to be used with external effects devices such as reverb. These are normally arranged as send/return loops. Sometimes known as "echo".

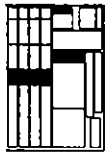

CHANNEL EQUALISER RESPONSE

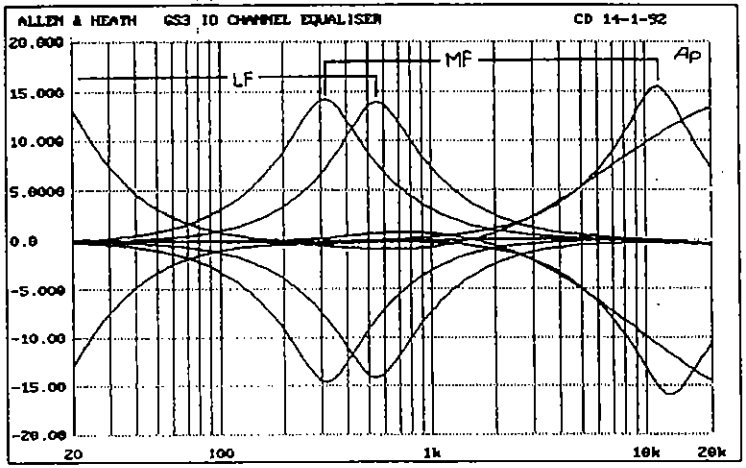

CHANNEL CUE, EQ AND PEAK BLOCK DIAGRAM

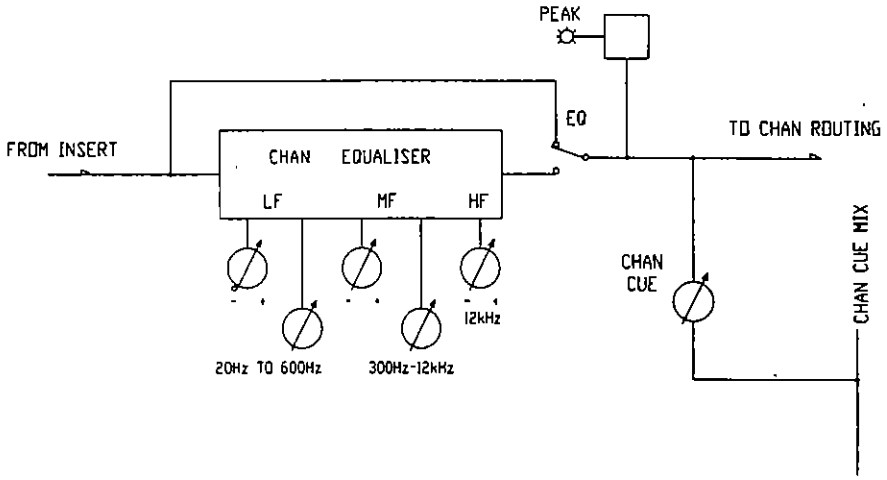

CHAN CUE Adjusts the level of pre-fade pre-mute programme being sent from the CHANNEL path to the CHANNEL CUE buss. This allows you to create a dedicated channel foldback mix.

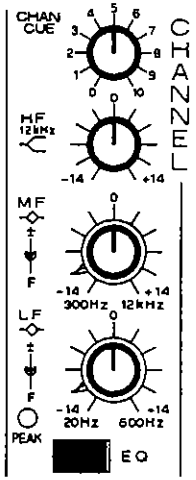

HF Provides high frequency (treble) cut and boost in the CHANNEL path. At the centre click-stop position the response is not affected.

+/-14dB 12kHz shelving equaliser

MF This dual concentric control provides swept mid frequency cut and boost in the CHANNEL path. The top control gives you cut and boost. At the centre click-stop position the response is not affected. The lower control sweeps the peak/dip frequency.

+/-14dB from 300Hz to 12kHz peak/dip equaliser

LF Thid dual concentric control provides swept low frequency (bass) cut and boost in the CHANNEL path. The top control gives you cut and boost. At the centre click-stop position the response is not affected. The lower control sweeps the peak/dip frequency.

+/-14dB from 20Hz to 600Hz peak/dip equaliser

EQ Switches the equaliser into the CHANNEL path when pressed. This lets you compare the equalised programme with the original at the press of a switch.

PEAK Illuminates when CHANNEL audio signals approach overload, showing the equalised audio level.

Turns on 3dB before clipping (distortion)

CHANNEL SECTION - CUE, EQUALISER and PEAK

This is the main channel signal path, normally used for mixing the sources to the tape tracks during multitracking, and for processing and mixing the tape tracks during mixdown to stereo.

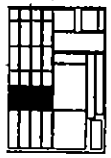

MARKING UP YOUR CHANNEL A scribble strip is provided below the fader for you to write on the channel source or other session information. We recommend that you use a chinagraph pencil or other easily erasable marker to avoid permanent damage to the mixer finish. The armrest includes a 1 inch wide slot which you may use as a pencil recess or for further channel identification using a strip of lightly adhesive draughting tape. Do not write directly on to the armrest as this may damage the finish.

VCA FADER AUTOMATION Available on the **GS3V** console version this advanced system replaces the CHANNEL audio fader with a high performance VCA (Voltage Controlled Amplifier). The fader sends a DC control voltage proportional to its position to the console automation computer which returns the related voltage to the VCA, so setting the signal level. The computer memory system, built-in sequencer and interface to external music equipment lets you record, replay and synchronise the fader levels automatically, as well as create master/slave fader subgroups, thus expanding the creative potential of your recording system. Refer to the separate **AUTOMATION** manual for full details.

CHANNEL PFL, MUTE and ROUTING BLOCK DIAGRAM

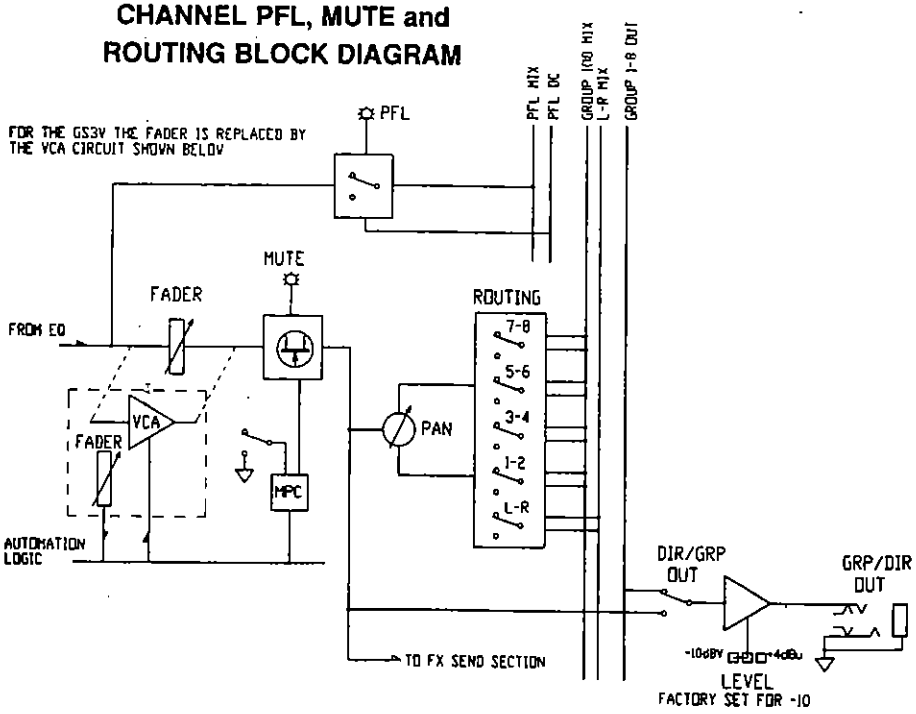

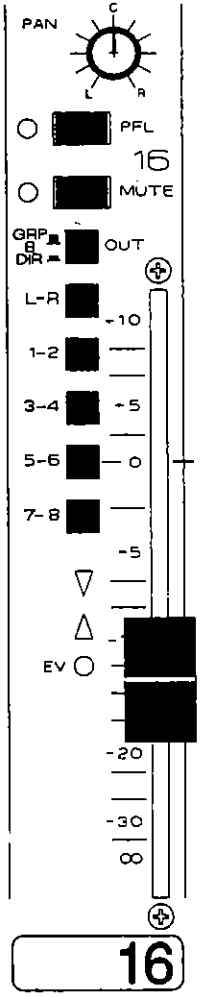

PAN Position the CHANNEL signal between the left and right outputs of the stereo mix. Full counter-clockwise routes all of the signal to the left output, and full clockwise to the right. At the centre click-stop position the signal is centred in the stereo image.

PFL Allows the pre-fade CHANNEL signal to be checked through the control room output or headphones without interrupting the recorded programme.

MUTE This momentary action switch toggles the CHANNEL signal off (muted, LED on) or on. This affects the signal to all outputs except CUE. The mute is controlled by the console computer memory system providing a high degree of mute automation.

GRP/DIR OUT When pressed , this sends the post-fade post-mute CHANNEL signal to the channel output connector (direct to multitrack). When released, the related one of eight group outputs is sent to this connector. The group outputs are internally patched to the channel outputs as shown in the table on page 5-3.

This gives you the advantage of being able to record as many tracks as you have on your multitrack simultaneously without any repatching.

L-R Switches the post-pan CHANNEL signal to the main stereo output. This output is normally connected to your 2-track recorders.

ROUTING 1-2 to 7-8 Switches the post-pan CHANNEL signal to the eight groups in stereo pairs. These groups would normally be used for mixing signals to the multitrack, or for subgrouping to the stereo mix.

CHANNEL FADER Controls the level of the CHANNEL signal to all the outputs except the CUE system and inserts. The mark "0" is the normal operating position (unity gain) and a further 10dB of boost is available at the top position. The **GS3V** version includes UP, DOWN and EVENT indicators which show the status of the VCA fader system.

CHANNEL SECTION - PFL, MUTE, ROUTING and FADER

This is the main channel input path, normally used for mixing the sources to the tape tracks during multitracking, and for processing and mixing the tape tracks during mixdown to stereo.

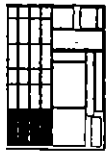

THE GROUP METERS

Each group has a peak reading 10 segment 2 colour bargraph meter which reads the post-fade GROUP output signal presented to the channel GRP/DIR outputs.

The normal operating level "0" is indicated by the first red LED. For optimum performance operate the console with the meters averaging "0" or just below with occassional peaks into the "red".

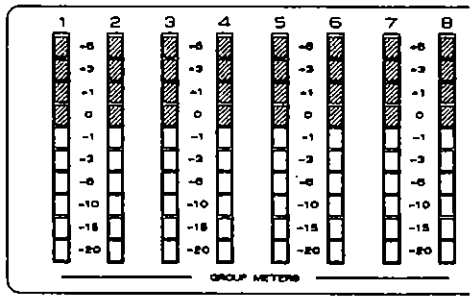

INSERTING A PROCESSING DEVICE

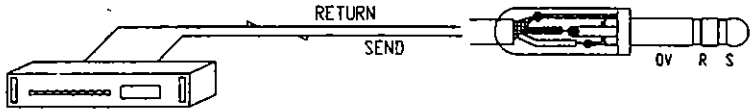

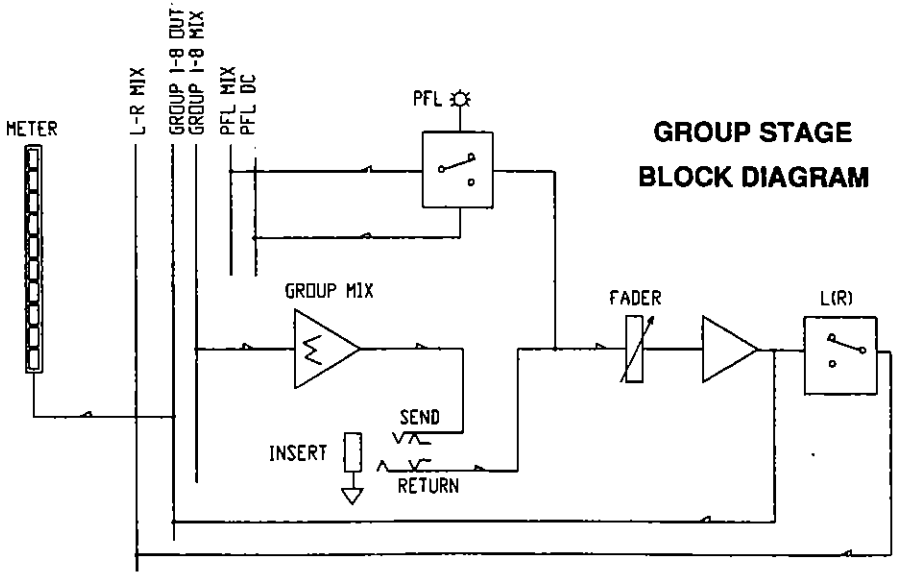

GROUP STAGE BLOCK DIAGRAM

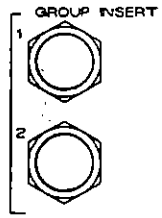

GROUP INSERT 1/4" 3-pole A-gauge jack socket break point to insert signal processing devices into the group audio path pre group fader. With nothing plugged in the send is internally connected to the return.

tip = send (from the group mix amp)
ring = return (to the group fader)
sleeve = 0V (ground) Nominal level = 0dBu

You would normally use these inserts for signal processing devices such as compressors or limiters, or group effects devices such as delays.

Depending on the connector requirements of your external device you may need to use a suitable splitter lead. For further details please refer to the section **Installation Basics.**

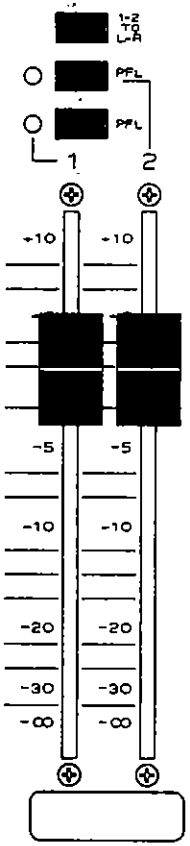

GRP TO L-R Feeds the group outputs directly to the stereo mix in pairs, odd groups to Left, even to Right. This lets you group several channel signals together under the control of a single pair of "master" faders which feed the main stereo mix. This is known as stereo subgrouping. Typical applications include grouping of several drum kit or backing vocal microphones.

PFL Lets you check the pre group fader signal through the control room monitors or headphones without interrupting the recorded program. PFL is after the insert and before the group fader so that you may check the signal after processing and with the fader down. Each group has its own PFL switch.

GROUP FADER Controls the level of the group signal. The "0" mark is the normal operating position (unity gain) and a further 10dB of boost is available at the top position. In the down position the programme is shut off fully.

GROUP MASTERS and METERS

This section gives you master level control and monitoring of the eight group mix outputs, and lets you set up subgroups to the stereo mix.

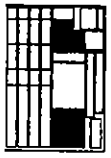

RETURN EQUALISER RESPONSE

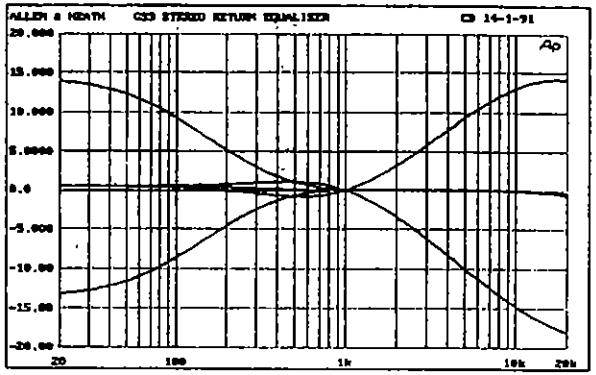

STEREO RETURN

1/4" 3-pole A-gauge jack sockets to connect the outputs from your stereo or mono effects devices to the return channels.

unbalanced
tip = left (or mono)
ring = right
sleeve = 0V (ground)
sensitivity =
-12dBu to +4dBu

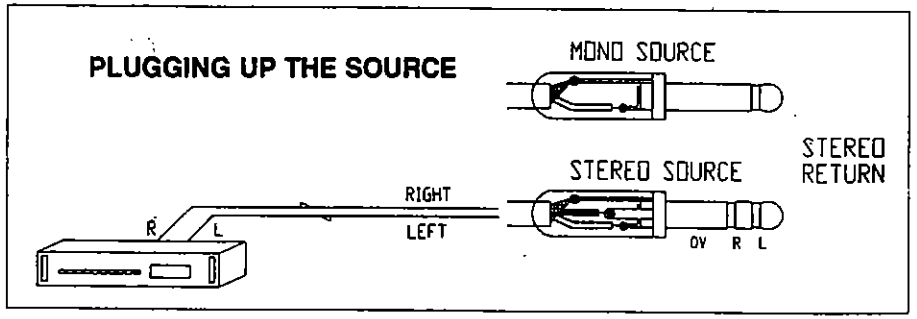

STEREO RETURN BLOCK DIAGRAM

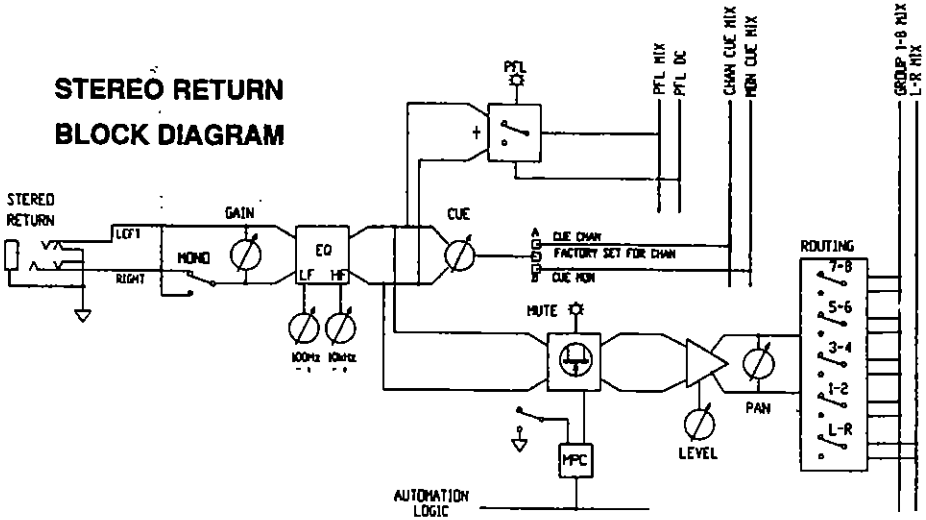

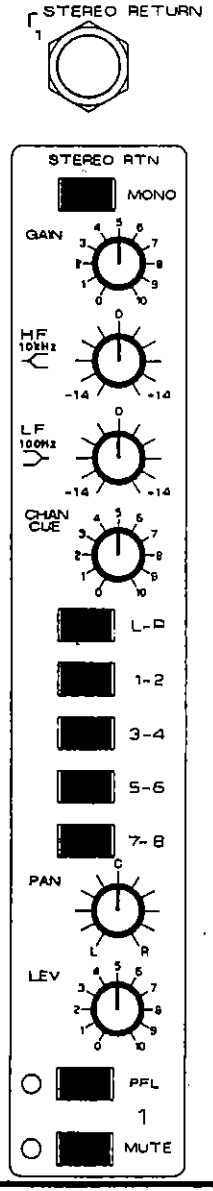

MONO Switches the left input (tip signal) to both the left and right channels. This gives you the optic.. of plugging in either a stereo or a mono source.

GAIN Adjusts the sensitivity of the input stage to match the source to the channel.

sensitivity = -12dBu to +4dBu

HF and LF These controls provide high frequency (treble) and low frequency (bass) cut and boost respectively in the return path. In the centre click-stop position the response is flat.

+/-14dB 10kHz, 100Hz shelving equaliser

CHAN CUE Adjusts the pre-mute, pre-level programme being sent from the return path to the CHANNEL CUE buss to feed your musicians foldback mix.

ROUTING L-R, 1-2 to 7-8 Switches the post-pan return signal to the stereo mix or groups in stereo pairs.

PAN Adjusts the balance between the left and right channels of your stereo source, or positions your mono source within the stereo image. At the centre click-stop position the signal is equally balanced or centred.

LEV This controls the level of the return signal to the selected outputs in much the same way as the faders do for the channels. Unity gain is position "7" giving you a further 10dB of gain at the maximum position.

PFL Lets you check the pre-level return signal through your monitors without interrupting the recorded programme. The left and right signals are combined.

MUTE This momentary action switch toggles the return signal off (muted, LED on) or on under control of the console computer memory system. This affects the signal to all the outputs except CUE.

STEREO RETURNS

Four full function stereo input channels let you return the processed signals from your stereo or mono effects devices, or give you yet more line inputs to your multitrack or stereo mix.

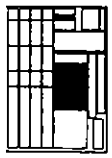

PLUGGING UP YOUR MASTER SECTION

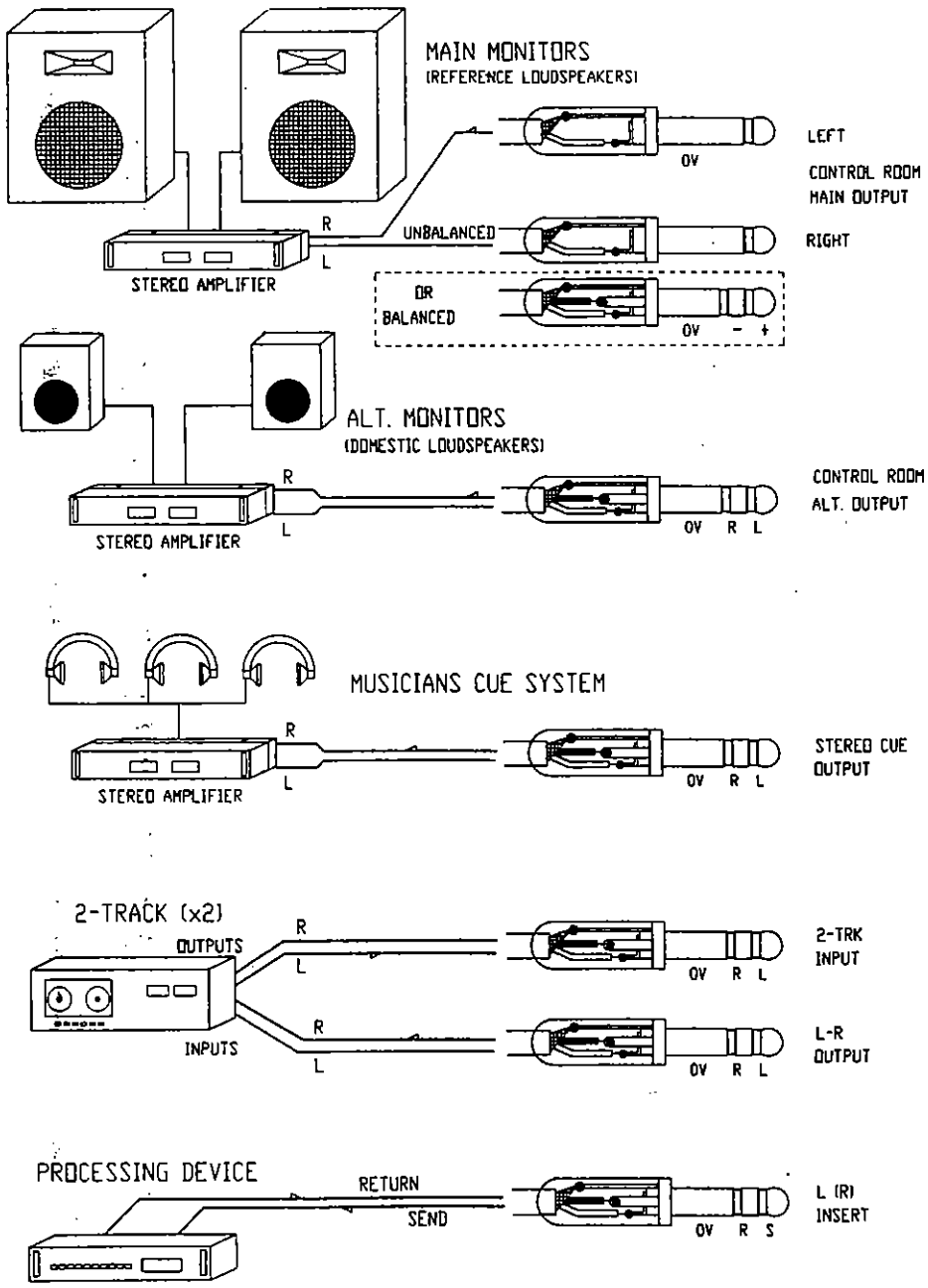

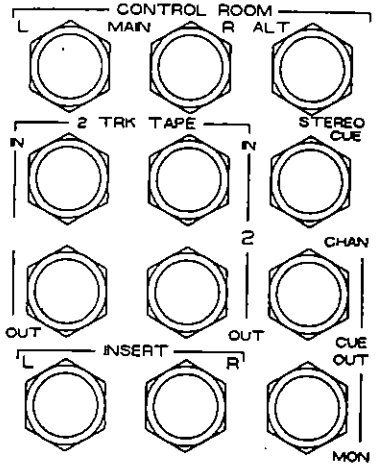

THE CONNECTORS

These are .1/4" 3-pole A-gauge jack sockets. Some are stereo function, ie. one connector provides both left and right signals. Where your equipment has individual connectors for each signal you shall need to use a suitable splitter lead. Refer to the section **Installation Basics** for details.

This does not apply to the MAIN monitor outputs which are on separate sockets and may interface to both balanced or unbalanced amplifiers.

CONTROL ROOM MAIN L and R Connects to your main monitor system so that you may listen to the audio quality of your programme. Connect to a high quality stereo amplifier and pair of reference loudspeakers.

tip = + (signal) unbalanced MONO PINOUT
ring = - (ground)
sleeve = 0v (ground) Nominal level = 0dBu

CONTROL ROOM ALT Connects to your alternate stereo amplifier and domestic quality loudspeakers (sometimes called "squawk").

tip = left signal unbalanced STEREO PINOUT
ring = right signal unbalanced
sleeve = 0v (ground) Nominal level = 0dBu

STEREO CUE Connects to your studio stereo amplifier and pair of loudspeakers or musicians foldback headphone ring . You may use the built in talkback system to talk to this output. Stereo pinout as above.

CHAN and MON CUE Provide separate outputs from the CHANNEL path and MONITOR path mix busses, useful for providing extra foldback sends. Mono pinout as above.

2-TRK TAPE IN and L-R OUT two pairs of sockets to connect to your two 2-track (stereo) mastering machines such as DAT and cassette recorders. Your console lets you dub between these recorders. Stereo pinout as above.

L and R INSERT Allows you to insert external processing devices such as compressors before the L-R faders. Pinout as the channel and group inserts.

MASTER CONNECTORS

Interface the console to your 2-track recorders, musicians cue systems, and two amplifier/loudspeaker monitoring systems.

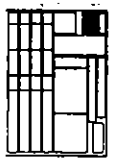

THE L-R / MONITOR METERS

Two peak reading 2 colour 10 segment bargraph meters read the selected control room monitor source , usually the post-fade L-R (stereo) mix. When you press PFL (or AFL) both meters automatically switch to read the mono PFL/AFL source, useful for setting the channel gain controls for the optimum operating level. This is indicated by the first red LED, mark "0". For best performance operate the console with the meters averaging "0" or just below, with occassional peaks into the "red".

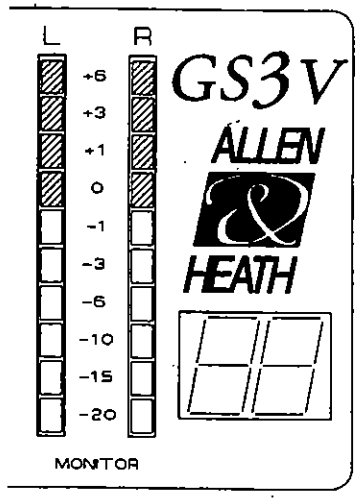

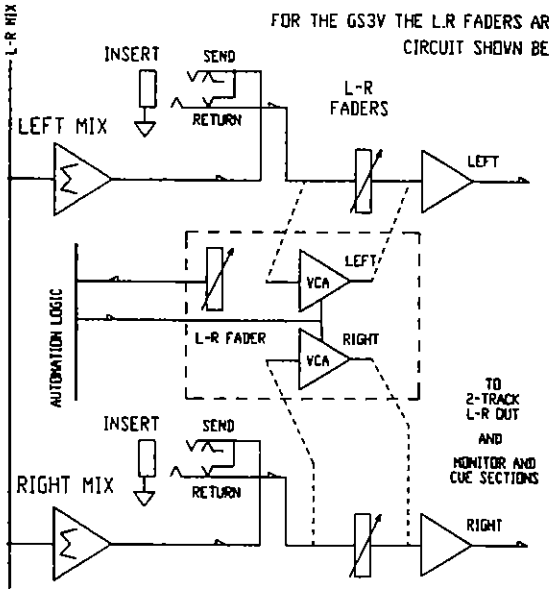

L-R MASTER and TALKBACK BLOCK DIAGRAM

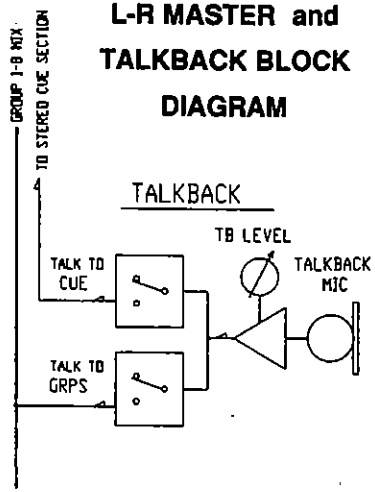

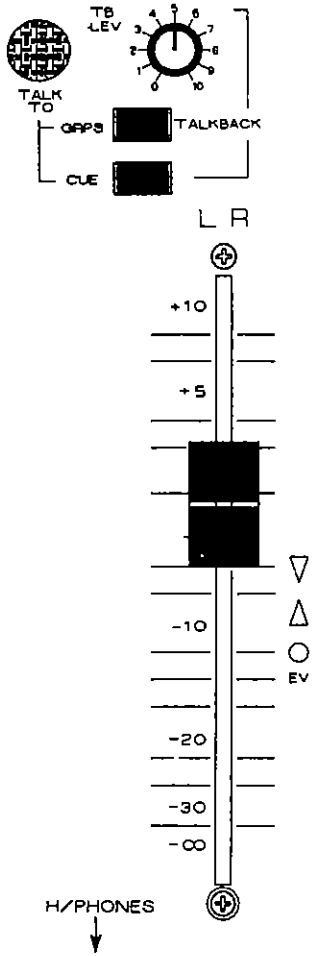

TB LEV Adjusts the sensitivity of the internal talkback microphone.

TALK to GRPS This momentary action switch lets you talk to the eight groups simultaneously, useful for recording track identification and other session details on the tracks of your multitrack, sometimes referred to as "slate".

TALK to CUE This momentary action switch lets you talk to the stereo CUE output which would normally be connected to your studio or musicians foldback system. The talkback signal mixes with the cue programme so that your musicians may still hear their foldback mix while you talk to them. The talk signal does not appear at the individual CHANNEL CUE and MONITOR CUE output sockets.

L-R MASTER FADER/S Depending on the console version, one or two long throw faders for left and right let you control the overall level of your stereo mix.

You may use these to fade in or out the mix, or to adjust the stereo balance. The normal operating position (unity gain) is mark "0", with a further 10dB of boost available at maximum.

HEADPHONES The headphone socket is positioned on the right of the master section underneath the armrest so that the cable does not interfere with the panel controls. We recommend that you use professional quality stereo headphones of 8 to 600 ohms impedance.

Refer to the diagram on the following page.

L-R MASTER FADERS, TALKBACK and HEADPHONES

The built in talkback system lets you record track information on your multitrack, and talk to your studio or musicians foldback.

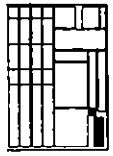

DUBBING BETWEEN TWO 2-TRACK RECORDERS

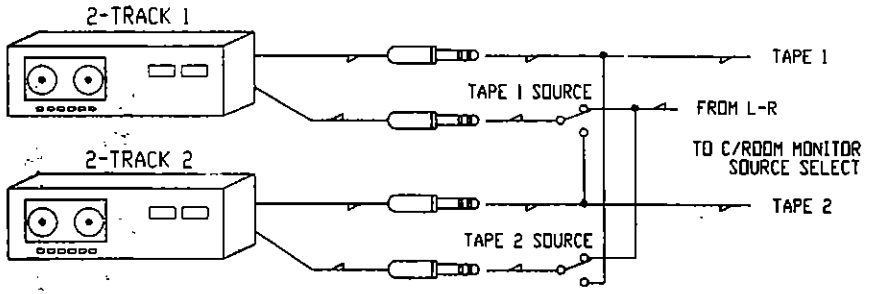

CONNECTING YOUR HEADPHONES

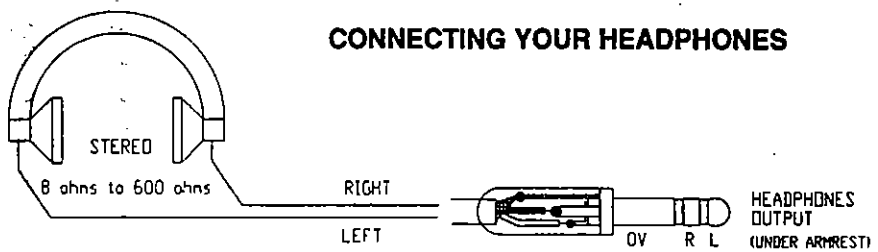

CONTROL ROOM MONITOR BLOCK DIAGRAM

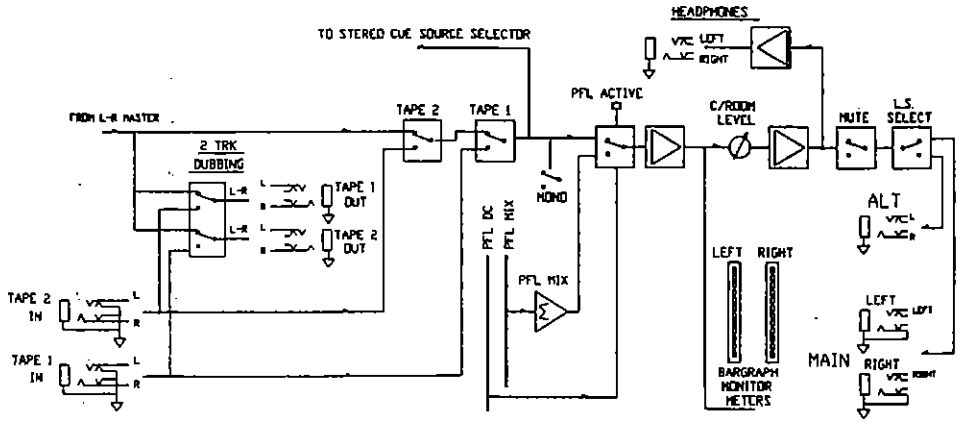

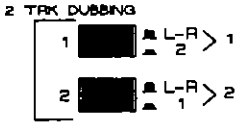

2-TRACK DUBBING One switch for each of your 2-track mastering recorders selects its recording source. In the normal (up) position the console L-R output (stereo mix) is selected . When pressed, the output of the other becomes the source. This allows you to record from one machine to the other (known as "dubbing") without having to replug the cables.

CONTROL ROOM SOURCE SELECT Two switches let you monitor the playback from either of your 2-track recorders. With both switches released (up) the console L-R stereo mix output becomes the source. If you press both switches then 2-trk 1 takes priority over 2-trk 2. The selected source may also feed your stereo cue system by pressing the FOLLOW C/ROOM switch in the STEREO CUE section. This enables playback to your musicians foldback.

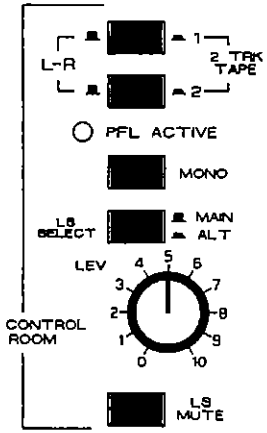

PFL ACTIVE This red LED lights when you press a PFL or AFL switch anywhere on your console. Your monitor loudspeakers, headphones and L-R meters automatically switch to the PFL source which is fed in mono to both sides. Note that you may mix the PFL signals by pressing more than one switch. When you release PFL the active LED turns off and the selected monitor source is restored.

MONO Combines the left and right monitor programme, useful for checking mono compatability. This does not affect the feed to the stereo CUE source selector.

LS SELECT Switches between your main (reference) and alternate (domestic) monitor systems for signal comparison.

LEV Controls the level of the monitor outputs.

LS MUTE Switches off (mutes) the output of your console to your loudspeaker monitor systems so that you may use headphones only, or quickly quieten the output. We recommend that you use this switch to protect your loudspeakers whenever you turn your console on or off.

MASTER SECTION - CONTROL ROOM MONITOR

Provides comprehensive audio and meter monitoring of your programme at many points in the console audio path, and your 2-track playback. Connects to 2 speaker systems and headphones.

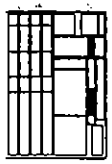

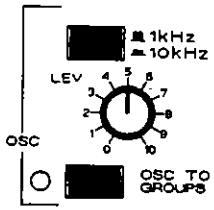

1kHz / 10kHz In the normal (up) position the internal oscillator generates a sinewave tone at a frequency of 1kHz. When pressed a 10kHz tone is generated. These tones are used for checking the level matching between your console and studio equipment, or to check the line-up of your tape machines.

LEV Adjusts the output level of the oscillator.

OSC TO GROUPS When selected this switch turns on the internal oscillator and routes the tone to the eight groups. The output is available at the channel GRP/DIR sockets, ie. to your multitrack. Alternatively you may patch the tone from a group insert send to test other signal paths in your system. Always switch the oscillator off when recording with your console.

Refer to the section **Getting Started** for details on how to use the oscillator to check your multitrack line-up.

OSCILLATOR and CUE BLOCK DIAGRAM

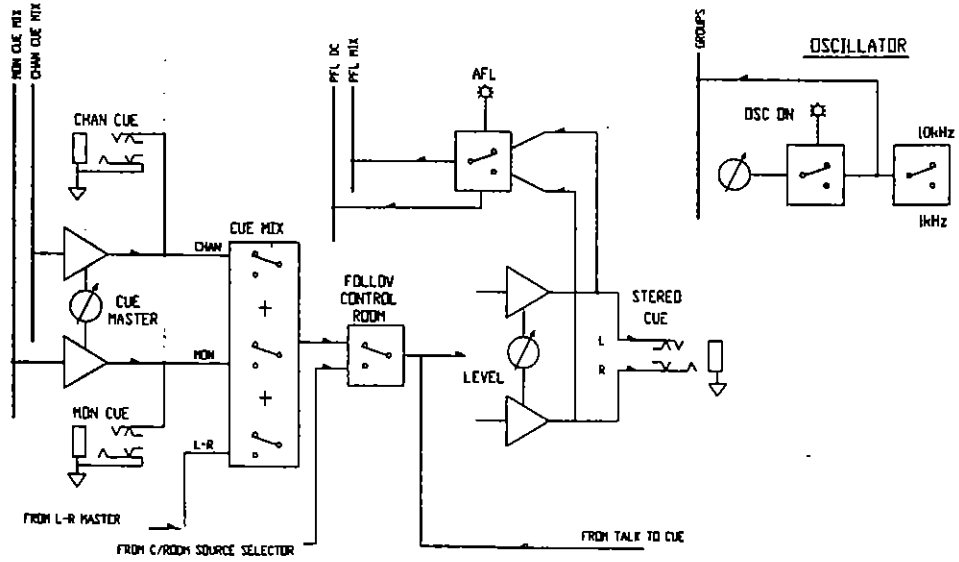

CHAN/MON CUE MASTER Adjusts the overall level of both the CHANNEL CUE and MONITOR CUE mix outputs simultaneously. Normal operating position is mark "7" when feeding the STEREO CUE system.

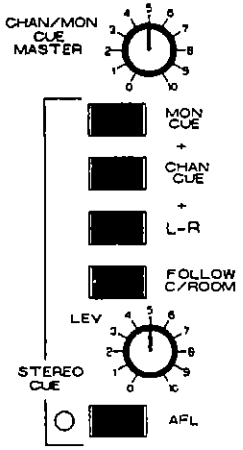

STEREO CUE SOURCE SELECTORS Switches a combination of sources to feed the STEREO CUE output . MON CUE and CHAN CUE (in mono), and the stereo L-R signal may be mixed in any combination.

This allows for a very flexible approach to setting up cue mixes during recording and overdubbing. You can set up a dedicated mix using the channel cue sends, or for a quick cue mix you could start with the main L-R mix and then raise the level of a specific channel by using the related cue send.

FOLLOW C/ROOM Selects the control room monitor source as the source to the STEREO CUE system allowing you to replay your stereo recordings into your studio or musicians foldback headphones. This feed is not affected by the control room MONO switch, or by the PFL system.

You may talk to the STEREO CUE output using the built in talkback microphone. The talk signal is mixed with the cue programme.

LEV Controls the STEREO CUE output level. Normal operating position should be around mark "7".

AFL (after-fade-listen) Allows the post cue level signal to be checked through the control room monitors without interrupting the recorded programme.

MASTER SECTION - OSCILLATOR and CUE

An internal oscillator lets you to check and line up your system. The CUE section offers flexible control over the programme you send to your studio or musicians foldback system.

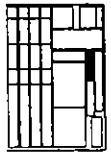

These diagrams illustrate the basic recording stages as described in the following section.

MULTITRACKING

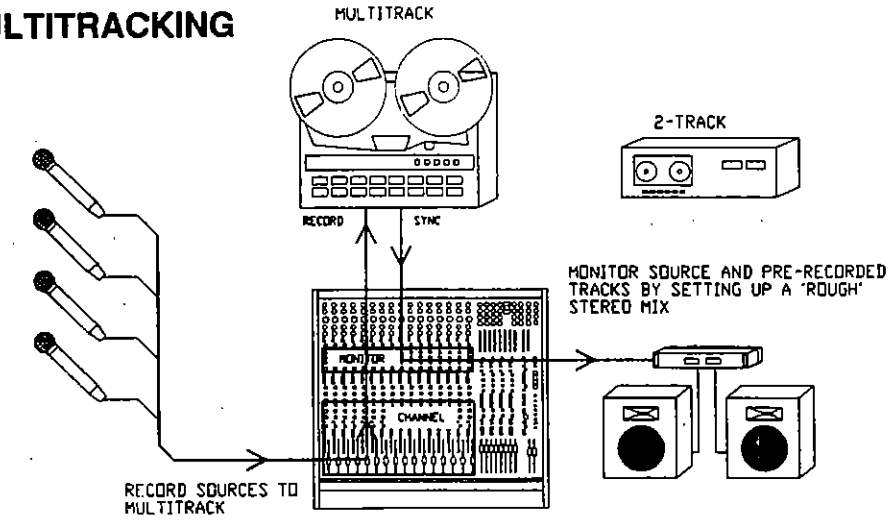

MIXDOWN

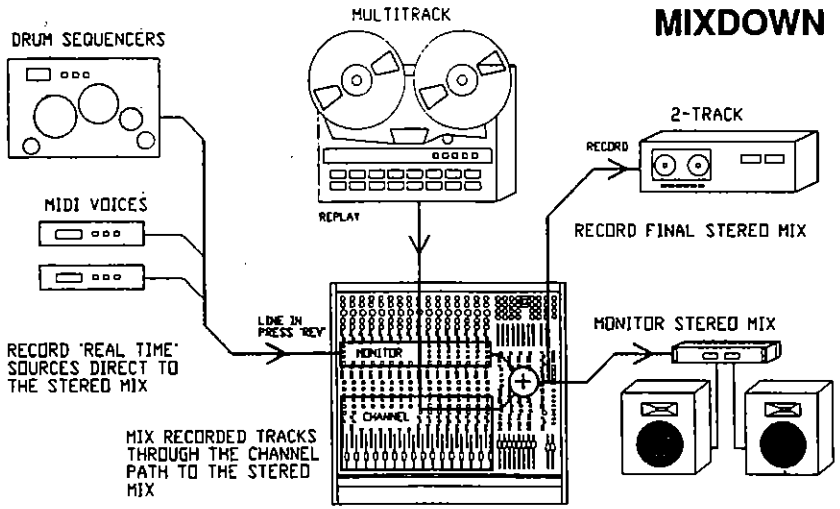

This page intentionally left blank

ABOUT MUTE AUTOMATION

6

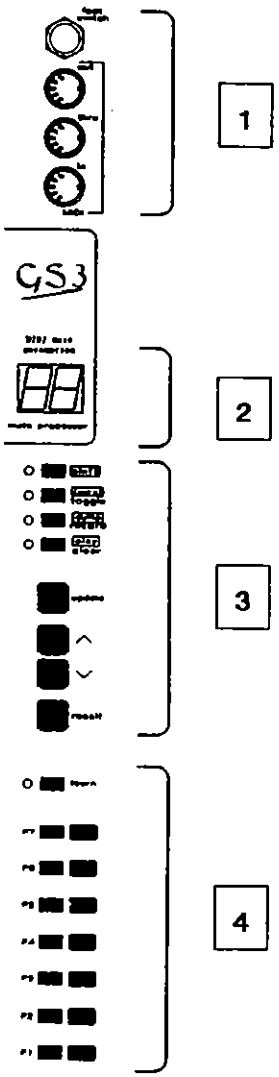

Your console features the powerful *ALLEN & HEATH* **V4** ***plus*** mute automation system. This is the most advanced release of the market leading MIDI mute automation system fitted to consoles costing many times the price.

The power of this system is such that it demands a complete reference manual of its own to present the full potential. Please make time to read PART B of this manual which is dedicated to this system. This describes the full control function, the background and implementation of MIDI, and opens the door to many of the creative recording possibilities.

In this section we present a general overview of the system and its basic operation to help you identify the controls and get started.

THE CONTROL LAYOUT:

1 THE CONNECTORS Three standard MIDI (musical instrument digital interface) connectors allow you to interface your console to other MIDI equipment in your system. You may plug in a footswitch for "hands off" control.

2. THE DISPLAY This 2 digit LED display gives you easy visual indication of system status.

3. THE CONTROL KEYS You use these keys to program and recall your mute patches, control the internal sequencer, set up MIDI, and access the more advanced functions.

4. THE LEARN KEYS Seven function keys (one linked to the footswitch) may be user programmed for MIDI commands and patch recall.

GENERAL OVERVIEW

Your console has a built in microcomputer which controls the mutes (switching on and off) of the CHANNEL and MONITOR signal paths, FX send outputs, and stereo FX returns, thus allowing advanced static and real-time automation of these mute changes.

Your console is ready to use in the normal way as soon as you switch it on. You may toggle your mutes on or off manually without needing to access the control keypad and without connecting to external MIDI equipment.

Static automation lets you program and recall up to 32 "snap-shot" MUTE PATCHES which are retained in the battery backed console memory. These may be archived, recalled, or linked to the patch settings of your other equipment via MIDI.

Real-time automation lets you record your real-time mute changes in sync with your system MIDI CLOCK. These are stored in the internal song memories. You may carry out off-line editing and archiving of this data, and have the muting operations synchronised to your multitrack.

You have seven LEARN KEYS and a footswitch which you may program with MIDI command sequences such as "stop" and "start", or recall selected patches. A useful PATCH SOLO function may be set up.

HOW THE MUTE WORKS

Each mute switch sends a signal to the internal computer which in turn returns a control signal to the post-fade FET audio mute element and mute LED.

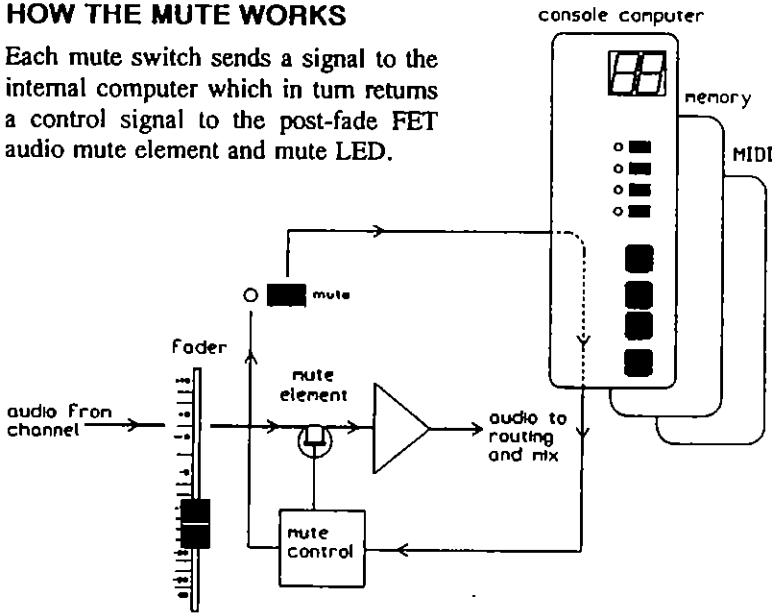

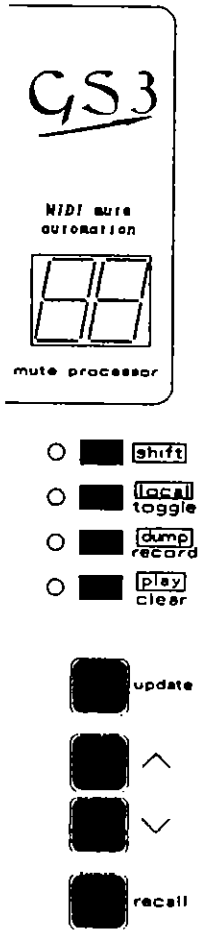

THE DISPLAY This easy to read 2-digit red LED display shows the system status as decribed below:

SHIFT KEY You use this to select the "shifted" function of the other keys, indicated by the rectangular boxes, or to change the keypad operating mode. The LED indicates the selected keypad mode.

There are four basic keypad operating modes :

NORMAL MODE:	shift LED off
SHIFT MODE:	shift LED on (steady state)
SONG MODE:	shift LED flashing (slow)
CONSOLE MODE:	shift LED flashing (fast)

The 2-digit display shows different information for each mode:

NORMAL MODE:	selected patch number
SHIFT MODE:	current system MIDI channel
SONG MODE:	Selected song number
CONSOLE MODE:	Current mode number

The shift key steps through the first three of these modes in a cyclic fashion, ie. after SONG MODE the system returns to NORMAL MODE.

CONSOLE MODE may be selected at any time by pressing and holding down the shift key. The display scrolls slowly through modes 1 to 8. You release shift when the display reaches the mode number you require.

CONSOLE MODE sets the form of the MIDI implementation, and whether or not the display and memory are AUTO INCREMENTED after a patch recall or update:

In SHIFT mode the display shows the selected **MIDI CHANNEL** number, default = 16. You may change this using the up and down keys.

CONSOLE MODES

MODE 1:	Increment ON	Mutes as NOTE ON / OFF
MODE 2:	OFF	NOTE ON / OFF
MODE 3:	ON	CONTROLLER CODES
MODE 4:	OFF	CONTROLLER CODES
MODE 5:	ON	No MIDI channel voice messages
MODE 6:	OFF	No MIDI channel voice messages
MODE 7 and 8	refer to PART B of this manual.	

TOGGLE / LOCAL KEY and LED

Selects TOGGLE MODE, with LED on. The display normally shows the current patch/song memory for RECALL or UPDATE. In TOGGLE MODE the display shows the patch/song which was last recalled, useful after an automated RECALL .

In SHIFT mode the LED indicates the MIDI LOCAL MODE, on or off. Press the key to toggle the state.

RECORD / DUMP KEY and LED

Starts the recording of the mute events in sync with MIDI CLOCK using the internal sequencer.

With SHIFT mode selected you may DUMP various selections of patch data to archive to an external sequencer or librarian system. In SONG mode you may archive song data.

CLEAR / PLAY KEY and LED

Pressing the CLEAR key initiates a sequence of events to erase or reset a patch, song or specific function. This is normally a double-press operation with a flashing LED to protect the data should you press the key by mistake.

In SONG mode PLAY is used to enable playback of the sequencer.

In SHIFT mode you may isolate selected channels from the internal mute automation system for playback, recording and patch recalls. The channel mute LEDs show which channels have been isolated.

UPDATE This large key is used to update the contents of the current mute patch, song memory, or MIDI channel selection. Depending on the CONSOLE MODE the patch display number may be auto incremented following this.

UP (INCREMENT) Pressing this key increments the number in the display. Holding the key down for a second or so causes it to scroll up, useful for getting to a particular number quickly. The display wraps around at number 32 back to 0 for patches, 32 to 1 for songs, and 16 to 1 for MIDI channel.

DOWN (DECREMENT) Pressing this key decrements the display as above.

RECALL This large key is used to update your console with the contents of a patch or song memory. Depending on the CONSOLE MODE the display may be auto incremented following this. It is also used to select the format for patch dumps.

For full details please refer to PART B of this manual.

WHEN YOU SWITCH YOUR CONSOLE ON

On power up the display should settle at "0" indicating that the console mutes have been reset to PATCH 0. The channel mute LEDs will display the PATCH 0 mute status. The normal setting (factory default) is all mutes off.

If the display shows a flashing "0", is blank, or shows some other non zero display, then an error condition is indicated. For further details please refer to PART B of this manual.

All LEDs on the Mute Processor keypad should be off, ie. the system is in its NORMAL operating mode.

BATTERY BACKED RAM Your console has a built in battery backed memory system which retains your patch and song data, and other important console settings when power is removed. The battery is automatically recharged while your console is turned on so that you should not normally need to replace it.

The standard factory settings are referred to as the DEFAULTS. You may of course change these to suit your specific requirements. Your changes will be remembered when power is removed so that you do not need to reset these each time you switch your console on.

In the unlikely event of the Mute Automation System becoming totally confused you may reset your console to these defaults. This procedure is described fully in PART B.

THE DEFAULT SETTINGS (RESET)

CONSOLE MODE = 5 (increment ON, no MIDI voice messages)

MIDI channel = 16

MIDI local mode = ON

PATCH 0 = all mutes off (mute LEDs off)

PATCH 1 to 32 = as last set

Current Song number invalid

LEARN KEYS - see table later in this section

GETTING STARTED WITH MUTE AUTOMATION

Your console is ready for use right away. You may toggle the channel and FX mutes on and off as required without further keypad action.

A good starting point is to learn to use the internal patch memories to store and recall the console mute settings.

At any time the console mute settings may be stored in one of 33 patch memories. You normally reserve PATCH 0 for the power up and start of song mute pattern you require, default = all mutes off. This leaves patches 1 to 32 available for general use. A MUTE PATCH is a "snap-shot" of the console mute settings.

UPDATE A MUTE PATCH

Set the console mutes as you require.

Use the UP and DOWN keys to select the PATCH number you wish to update.

Press the UPDATE key on the Mute Processor keypad. Depending on the CONSOLE MODE the display may auto increment to the next number up (or wrap around to zero).

This operation overwrites any previous snap-shot in the selected patch number.

RECALL A PATCH

Use the UP and DOWN keys to select the PATCH number that holds the mute settings you wish to recall.

Press the RECALL key. The status of the console mutes is instantly changed. Depending on the CONSOLE MODE the display may auto increment to the next patch number.

CLEARING PATCHES

You may clear the contents of a mute patch by first resetting the console mutes to off, and then updating the patch numbers you wish to clear.

To reset the mutes press the CLEAR key. The CLEAR LED should light. Press CLEAR again. The CLEAR LED and all console mutes should turn off.

To realise the full potential of your V4 *plus* Mute Automation System please read PART B of this manual.

THE LEARN (FUNCTION) KEYS



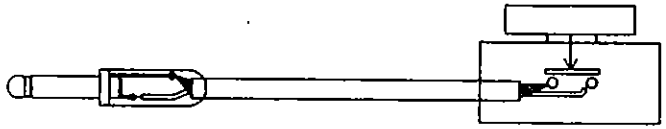

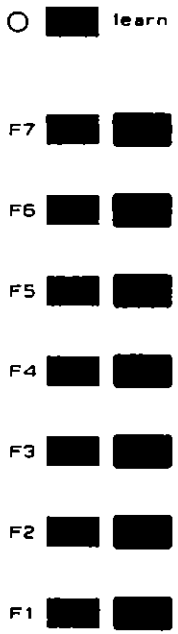

FOOTSWITCH You may plug in a standard momentary action footswitch to use as a function key. This is linked to the F7 key. You may use either the footswitch or the F7 key to program or activate the function.

LEARN This momentary action key is used when programming the function keys. The LED indicates the learn status:

ON = waiting for function key number
SLOW FLASH = learning "pressed" commands
FAST FLASH = learning "release" commands

Refer to PART B for full details.

F1 to F7 You may program these seven function keys either to output MIDI messages of your choice, or to recall internal mute patches.

Write-on boxes let you identify your commonly used functions using chinagraph pencil or similar.

DEFAULT (RESET) SETTINGS:

F7	MIDI	pressed = RECORD	note on/off C 6 & A5	f/switch
F6	MIDI	pressed = STOP	note on/off C6 & B5	
F5	MIDI	pressed = PLAY	note on/off C6 & A#5	
F4	MIDI	pressed = F/FORWARD	note on C6 & G#5	
		release = "	note off G#5 & C6	
F3	MIDI	pressed = REWIND	note on C6 & G5	
		release = "	note off G5 & C6	
F2	32	pressed = PATCH 32	recall	
F1	31	pressed = PATCH 31	recall	

Unless shown above the release function is not applicable.
These functions are remembered when power is removed.

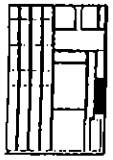

PATCH SOLO

You may use the learn key facility to set up a useful PATCH SOLO function.

SOLO lets you listen to a selected signal by muting all the other signals in the mix, most useful in setting up your mix as you may hear its contribution at the correct level and position within the stereo image.

The default setting for F1 is PATCH 31 recall, and F2 is PATCH 32 recall. Update PATCH 32 to be all channels muted. Update PATCH 31 before you carry out solo to the current console mute settings.

To carry out SOLO first press the F2 key. This mutes all signals. Immediately press the MUTE key of the signal you wish to solo. This turns that mute off and lets you hear just the wanted signal.

To restore your previous mute setting simply press the F1 key.

SOLO SAFE

A channel is said to be SOLO SAFE if it is not muted when solo is selected. This is normal for effects returns such as reverb where you want to hear both the "dry" and "wet" (processed) contribution of your selected solo channel.

To make a channel solo safe simply turn its mute off in the "solo" PATCH 32. Now when you press F2 to carry out solo that channel will not be muted.

LEVEL / EQUALISER SWITCHING

You may have a situation where you wish to bring an instrument forward such as a guitar playing backing during most of a song and lead for part. You could do this by feeding the signal to two channels and adjusting the fader and equaliser accordingly, perhaps a bit louder and brighter (mid EQ boost) for the "lead" channel. Mute one of these channels and toggle the mutes during the song accordingly.

THE AUTOMATED MIX

The greatest power of the system is realised by syncronising your mute changes to your multitrack or studio MIDI system so that they are "played back" automatically during mixdown.

Apart from freeing your hands for more creative tasks, this offers other important benefits such as "cleaning" your tracks of unwanted noise such as coughs, squeaks and thumps, "gating" in your instruments and effects devices only when you need them to reduce source noise, "splitting" your tracks and input channels to optimise track useage and to create automated effects, and switching between different track "takes" during mixdown.

All this may be recorded in "real-time" using the built in sequencer or your studio MIDI sequencer or keyboard. You may carry out precice editing of the mutes using the built in editing facility, or using an external sequencer/editor package (known as "off-line" editing).

THE MIDI MAP (TRANSLATION TABLE)

Your console is "mapped" on to the middle octaves of a standard MIDI keyboard. This links each console mute switch to a specific MIDI note number, thus letting you "play" the mutes from your MIDI keyboard and edit them on your off-line editor as musical notes.

You will find the CONSOLE CHANNEL TO MIDI NOTE NUMBER TRANSLATION TABLE for your console in the *QUICK REFERENCE* section in PART B of this manual.

Many creative possibilities are opened up by using your consoles mute automation. We recommend that you take some time to learn and experiment with the system to achieve the best for your needs. Please read PART B of this manual as it presents an in-depth look at the basic principles and advanced use of both the manual and automated features of this system.

QUICK REFERENCE FOR GS3 MUTE AUTOMATION

Nm=NORMAL MODE, Sh=SHIFT MODE, Sg=SONG MODE, Cn=CONSOLE MODE
$=TAPE MUST BE STOPPED, [..] OPTIONAL, RQST=MIDI REQUEST OPTION

FUNCTION	MODE	OPERATION	COMMENT	MIDI
		MUTES & PATCHES		
MIDI CHANNEL NUMBER	Sh	Change Number Press UPDATE	(flashes) (steady)	- -
MIDI LOCAL MODE (TEMP)	Sh	Press LOCAL	LED on = Local on	-
MIDI LOCAL MODE (PERMANENT)	Sh	Press & Hold LOCAL Press UPDATE	LED on = Local on	-
MUTE KEY (1)	-			NOTE ON/OFF (Cn 1&2[7&8])
MUTE KEY (2)	-			CONTROLLER CODE (Cn 3&4[8])
CLEAR CONSOLE MUTES	Nm	CLEAR Key-twice	LED - on then off	-
UPDATE PATCH	Nm	Select Number Press UPDATE		-
RECALL PATCH	Nm	Select number Press RECALL		PROGRAM CHANGE (Cn 1-4,7&8)
TOGGLE PATCH	Nm	Press TOGGLE	LED = on = TOGGLE on	-
DUMP PATCH MEMORY	Nm Sh	Select Number->[Nm] Press DUMP	LED will blink	SYSEX DUMP (Cn-ALL)+RQST
DUMP VIRTUAL PATCH	[Nm] Sh Sh	[Select number->] Press RECALL Press DUMP	LED = Slow flash LED = off	SYSEX DUMP (Cn-ALL)
DUMP ALL PATCHES	Sh	Press RECALL twice	LED = Fast flash	SYSEX DUMP (Cn-ALL)+RQST
		SONGS		
RECORD SONG	Nm	Press RECORD	LED on = RECORD on LED flashes if tape stopped	-
PLAYBACK SONG	Sh	Press PLAY	LED on = PLAYBACK on (Patch 0 recalled on tape start)	-
SAVE SONG to MEMORY($)	Sg	Select number Press UPDATE	Display flash = No data Display will blink	-
LOAD SONG from MEMORY($)	Sg	Select number Press RECALL twice	Display flash = No data Display will blink	SONG SELECT (Cn-ALL)
ARCHIVE SONG($)	Sg	Select Number Press DUMP	Display flash = No data LED will blink	SYSEX DUMP (Cn-ALL)+RQST
RETRIEVE SONG ($)	Any	-	(See error displays)	SYSEX DUMP (Cn-ALL)
TOGGLE SONG	Sg	Press TOGGLE	LED on = TOGGLE on	-

		EDITING		
UNDO ERASE	Nm	Omit '*' lines	Various	-
ERASE LAST MUTE	Nm	Start tape Press RECORD Press CLEAR Press MUTE key Press CLEAR (*) Press RECORD	 LED on = Record on LED will flash Mute erased LED off LED off	-
ERASE FORWARD	Nm	Start tape Press RECORD Press & hold CLEAR Press & hold MUTE key Release MUTE key Release CLEAR Press CLEAR (*) Press RECORD	 LED = Record on LED will flash (no state change) Mutes(s) erased LED stays flashing LED off LED off	-
ERASE CHANNEL ($)	Nm	Press RECORD Press & hold CLEAR Press MUTE key Release CLEAR Press CLEAR (*) Press RECORD	LED flash LED flash (no state change) LED stays flashing LED off LED off	-
ERASE PATCH RECALL EVENT (1)	Nm	Select number Start tape Press RECORD Press CLEAR (wait for patch to pass) Press RECALL Press CLEAR (*) Press RECORD Stop tape	 LED on LED flash LED off LED off	-
ERASE PATCH RECALL EVENT (2)	Nm	Press TOGGLE Start tape Press RECORD Press CLEAR (wait for patch to pass) Press RECALL Press CLEAR (*) Press RECORD Press TOGGLE Stop tape	LED on LED on LED flash - in display - LED off LED off LED off	-
ERASE SONG WORKING MEMORY ($)	Sg	Press CLEAR twice	LED on then off	-
UNDO THE ABOVE($)	Sg	Press CLEAR twice	LED On then off (tape must not have been moved)	-
ERASE SONG MEMORY ($)	Sg	Select Number Press & Hold CLEAR Press UPDATE	flash = no data present LED on Clear LED off - Display flashes	-

MISCELLANEOUS

CHANNEL ISOLATE (S)	Sh	Press & hold PLAY Press MUTE key(s) Release PLAY	LED flashes MUTE on = isolated
RESET CONSOLE	-	Power OFF Hold CLEAR key Power ON Press CLEAR key	LED off
ACCESS CONSOLE MODES	-	Press & hold SHIFT Hold until number wraps to correct preference Release SHIFT	LED quick flash Previous mode restored
LEARN FUNCTION KEY	Nn	[Select patch number] Press LEARN Press FKEY Press CLEAR [Tx MIDI] [Press RECALL] Press FKEY [Tx MIDI] [Press RECALL] Press FKEY	 LED on Clear LED slow flash (Display = FKEY number) Clear LED off, Learn LED slow flash Learn LED fast flash Learn LED off (Display returns to normal)

NOTES FOR THE CONSOLE CHANNEL TO MIDI NOTE NUMBER TRANSLATION TABLE

(see overleaf)

KEY:
- A STEINBERG PRO 24
- B AKAI, YAMAHA, KORG, CUBASE, C-LAB EQUIPMENT
- C ROLAND EQUIPMENT
- CH CONSOLE CHANNEL PATH
- MON CONSOLE MONITOR PATH
- SR CONSOLE STEREO RETURN
- FX CONSOLE FX SEND

NOTE: CONTROLLER CODE CHANNEL NUMBERS REMAIN THE SAME

CONSOLE CHANNEL TO MIDI NOTE NUMBER TRANSLATION TABLE (GS3 CONSOLES WITH v4.1 SOFTWARE)

HEX	DEC	CH	MON	A	B	C
0	0					C 3
1	1					C#3
2	2					D 3
3	3					D#3
4	4					E 3
5	5					F 3
6	6					F#3
7	7					G 3
8	8					G#3
9	9					A 3
A	10					A#3
B	11					B 3
C	12					C 0
D	13					C#0
E	14					D 0
F	15					D#0
10	16					E 0
11	17					F 0
12	18					F#0
13	19					G 0
14	20					G#0
15	21					A 0
16	22					A#0
17	23					B 0
18	24	SR1				C 1
19	25	FX1				C#1
1A	26	SR2				D 1
1B	27	FX2				D#1
1C	28	SR3				E 1
1D	29	FX3				F 1
1E	30	SR4				F#1
1F	31	FX4				G 1

HEX	DEC	ICH	MON	A	B	C
20	32	1		G#1	G#0	G#1
21	33		1	A 1	A 0	A 1
22	34	2		A#1	A#0	A#1
23	35		2	B 1	B 0	B 1
24	36	3		C 0	C 1	C 2
25	37		3	C#0	C#1	C#2
26	38	4		D 0	D 1	D 2
27	39		4	D#0	D#1	D#2
28	40	5		E 0	E 1	E 2
29	41		5	F 0	F 1	F 2
2A	42	6		F#0	F#1	F#2
2B	43		6	G 0	G 1	G 2
2C	44	7		G#0	G#1	G#2
2D	45		7	A 0	A 1	A 2
2E	46	8		A#0	A#1	A#2
2F	47		8	B 0	B 1	B 2
30	48	9		C 0	C 2	C 3
31	49		9	C#0	C#2	C#3
32	50	10		D 0	D 2	D 3
33	51		10	D#0	D#2	D#3
34	52	11		E 0	E 2	E 3
35	53		11	F 0	F 2	F 3
36	54	12		F#0	F#2	F#3
37	55		12	G 0	G 2	G 3
38	56	13		G#0	G#2	G#3
39	57		13	A 0	A 2	A 3
3A	58	14		A#0	A#2	A#3
3B	59		14	B 0	B 2	B 3
3C	60	15		C 1	C 3	C 4
3D	61		15	C#1	C#3	C#4
3E	62	16		D 1	D 3	D 4
3F	63		16	D#1	D#3	D#4

HEX	DEC	CH	MON	A	B	C
40	64	17		E 1	E 3	E 4
41	65		17	F 1	F 3	F 4
42	66	18		F#1	F#3	F#4
43	67		18	G 1	G 3	G 4
44	68	19		G#1	G#3	G#4
45	69		19	A 1	A 3	A 4
46	70	20		A#1	A#3	A#4
47	71		20	B 1	B 3	B 4
48	72	21		C 2	C 4	C 5
49	73		21	C#2	C#4	C#5
4A	74	22		D 2	D 4	D 5
4B	75		22	D#2	D#4	D#5
4C	76	23		E 2	E 4	E 5
4D	77		23	F 2	F 4	F 5
4E	78	24		F#2	F#4	F#5
4F	79		24	G 2	G 4	G 5
50	80	25		G#2	G#4	G#5
51	81		25	A 2	A 4	A 5
52	82	26		A#2	A#4	A#5
53	83		26	B 2	B 4	B 5
54	84	27		C 3	C 5	C 6
55	85		27	C#3	C#5	C#6
56	86	28		D 3	D 5	D 6
57	87		28	D#3	D#5	D#6
58	88	29		E 3	E 5	E 6
59	89		29	F 3	F 5	F 6
5A	90	30		F#3	F#5	F#6
5B	91		30	G 3	G 5	G 6
5C	92	31		G#3	G#5	G#6
5D	93		31	A 3	A 5	A 6
5E	94	32		A#3	A#5	A#6
5F	95		32	B 3	B 5	B 6

HEX	DEC	CH	MON	A	B	C
60	96			C 4	C 6	C 7
61	97			C#4	C#6	C#7
62	98			D 4	D 6	D 7
63	99			D#4	D#6	D#7
64	100			E 4	E 6	E 7
65	101			F 4	F 6	F 7
66	102			F#4	F#6	F#7
67	103			G 4	G 6	G 7
68	104			G#4	G#6	G#7
69	105			A 4	A 6	A 7
6A	106			A#4	A#6	A#7
6B	107			B 4	B 6	B 7
6C	108			C 5	C 7	C 8
6D	109			C#5	C#7	C#8
6E	110			D 5	D 7	D#8
6F	111			D#5	D#7	D#8
70	112			E 5	E 7	E 8
71	113			F 5	F 7	F 8
72	114			F#5	F#7	F#8
73	115			G 5	G 7	G 8
74	116			G#5	G#7	G#8
75	117			A 5	A 7	A 8
76	118			A#5	A#7	A#8
77	119			B 5	B 7	B 8
78	120			C 6	C 8	C 9
79	121			C#6	C#8	C#9
7A	122			D 6	D 8	D 9
7B	123			D#6	D#8	D#9
7C	124			E 6	E 8	E 9
7D	125			F 6	F 8	F 9
7E	126			F#6	F#8	F#9
7F	127			G 6	G 8	G 9

INTRODUCTION

This is the AUTOMATION SYSTEMS OWNER MANUAL for the GS3V audio mixing console. The operation of the mute and VCA fader automation is described with easy to follow diagrams and explanatory text.

Before using your automation please read the **Getting Started** section. This will introduce you to the system and take you through a step-by-step procedure of creating an automated mix. The rest of the manual can be used as a reference which you can use to get more in-depth descriptions of the automation functions. We also recommend that you first become familiar with the layout and function of your console by reading the GS3 AUDIO SYSTEMS OWNER MANUAL.

The GS3V is accompanied by a 3.5" floppy disk for Allen & Heath's V-EDIT control & display program for the Atari ST computer. Although you do not need an external computer to control the console automation functions, we recommend that you start with V-EDIT as it gives you a comprehensive graphical display and on-line HELP screens to help you learn the system quickly.

© copyright Allen & Heath Ltd. GS3V Automation Systems Manual
Publication AP0140 issue 2 October 1993

All trademarks are acknowledged

INITIAL SYSTEM CHECK

First check that you have installed the console and power unit according to the instructions in the **Getting Started** section of the GS3 AUDIO SYSTEMS OWNER MANUAL. Carry out the POWER UP CHECK as described in that manual.

ON POWER-UP

You may notice that several of the automation system LED indicators flash briefly as the system settles and carries out its power-up self test. The MIDI Rx/Tx LED (above the L-R fader) flashes as it transmits an initialising MIDI message for external equipment. Once settled the display should read a steady 0 and the PATCH, VCA and MUTE LEDs, on the control strip, will be turned on. Your console is now ready in PATCH MODE with PATCH ZERO selected (first of the 33 internal snapshot memories). The console MUTE switches and FADERS may be operated immediately as on a conventional non-automated console.

V-EDIT

This program is ideal for learning the GS3V automation, providing a graphical display of the console fader positions, VCA levels, mute switch settings, group assignment, automation status and SMPTE readout. To use V-EDIT you need an Atari computer (ST 1040, Mega 1/2/4 running TOS V1.2 or later), a monochrome monitor, and two MIDI leads. Connect the system as shown below. Power up the console, insert the V-EDIT disk in the Atari, and then load the program by double clicking on the GS3V.PRG icon. For more information on V-EDIT see section 8.

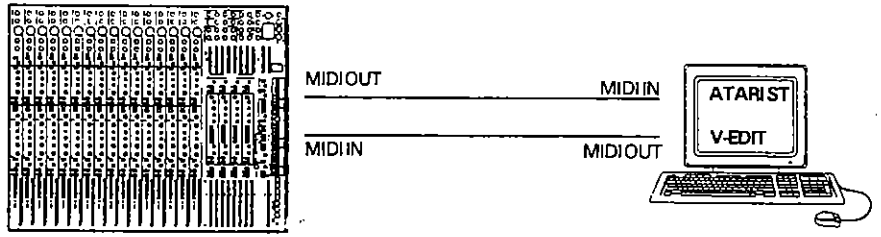

GS3V AUTOMATION EXPLAINED

The Channels, Monitors, four FX Masters and four Stereo Returns each have an automated momentary MUTE switch. When pressed this sends a control signal to the automation computer which returns information to an FET gate circuit to toggle the audio signal on or off. A red LED indicator alongside shows mute status (on = signal muted) or mute group assignment.

Unlike conventional consoles which pass audio directly through the faders, each GS3V channel FADER and the L-R fader sends a DC control voltage, proportional to its position, to the automation computer. This returns a related DC voltage to a VCA (voltage controlled amplifier) to control the audio level. As the fader position and VCA level may not always be the same, two triangular LEDs next to each fader indicate the NULL point. Both lit indicate the same point - NULLED. Only the lower LED lit indicates that the fader is lower than the VCA level; the top LED indicates that it's higher. The EV LED indicates automation events, and other important status information.

The internal automation computer enable you to save and recall mute and fader settings in the internal patch memories, automate your mix by recording and replaying mute and fader changes (using the built-in real time sequencer), communicate data between the console and other equipment in your system using MIDI ... and much more.

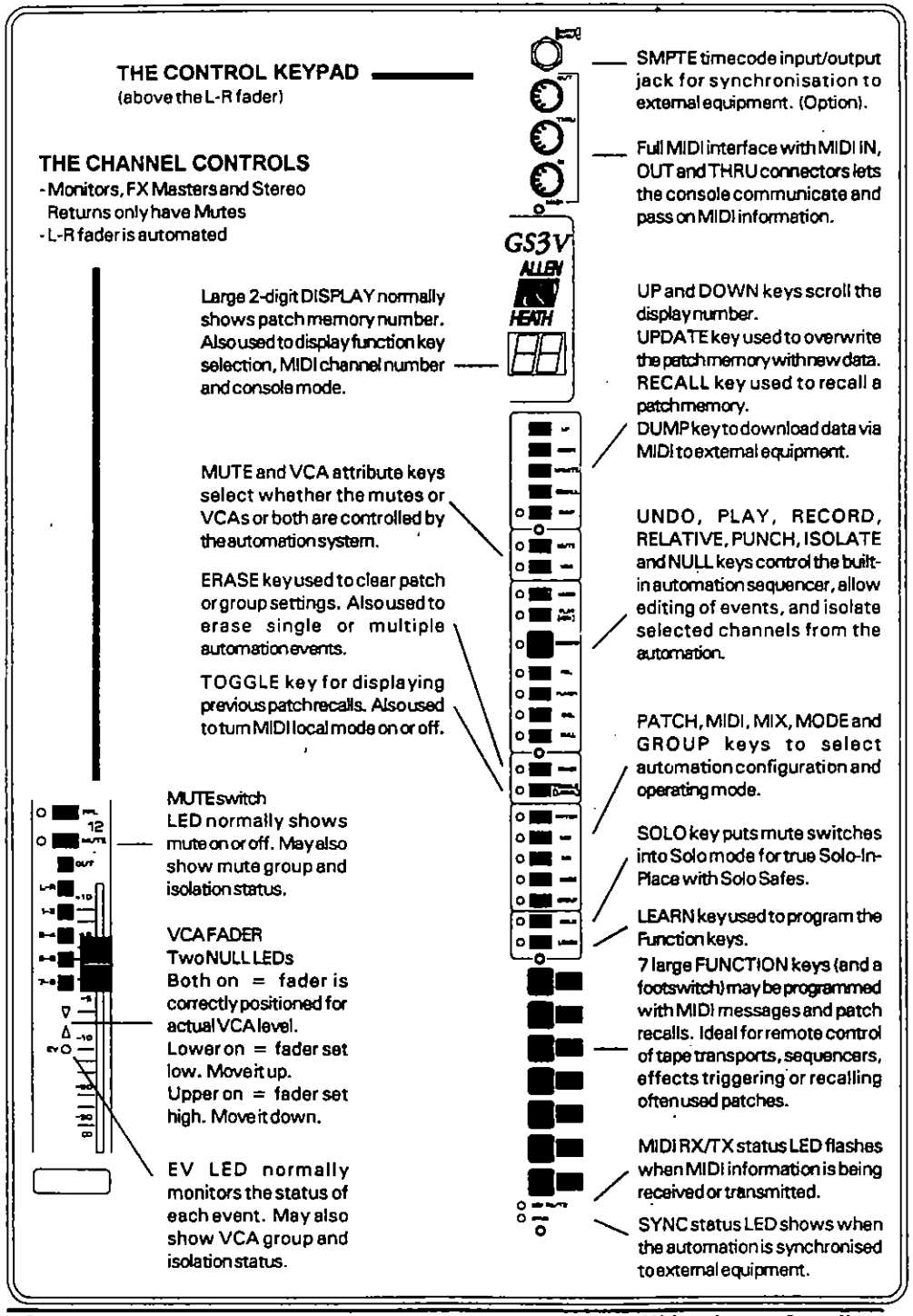

TUTORIAL - RECORDING YOU FIRST MIX

This section will give you a quick guided tour of the automation system by performing an automated mix. The steps you will carry out are:

- Connect up the basic system
- Record a basic mix
- Isolate some VCAs
- Use the Solo facility
- Programme some VCA & mute groups
- Edit the mix using Erase
- Edit the mix in Trim Mode
- Save & Load the mix

Following these steps will equip you with the knowledge required to confidently drive the automation system. More in-depth descriptions of the above techniques, and other features, are included throughout the rest of this manual.

1. Connect Up The Basic System

Although the GS3V automation requores no external computer to operate, it is a good idea, for the purposes of this tutorial, to run V-EDIT to give you useful visual feedback. If you want to use V-EDIT then connect up the system as described on page 1 of this section. If you do not want to run V-EDIT you will need to provide the GS3V with a suitable timing reference (MTC or MIDI Clocks) either from a multi-track tape machine (via a SMPTE to MIDI converter) or from a MIDI sequencer.

If you are using V-EDIT:

- Connect up V-EDIT as described on page 1 of this section. Turn on the GS3V and the Atari. Run V-EDIT on the Atari as described previously described. Then select **Connect GS3V** from the **Utilities** menu in the V-EDIT. The faders & mutes on the screen will now be the same as on the console.

If you are <u>not</u> using V-EDIT:

- Connect up your system as shown below. Although your final setup will probably be different from that shown, keeping it simple will avoid any possible system irregularities.

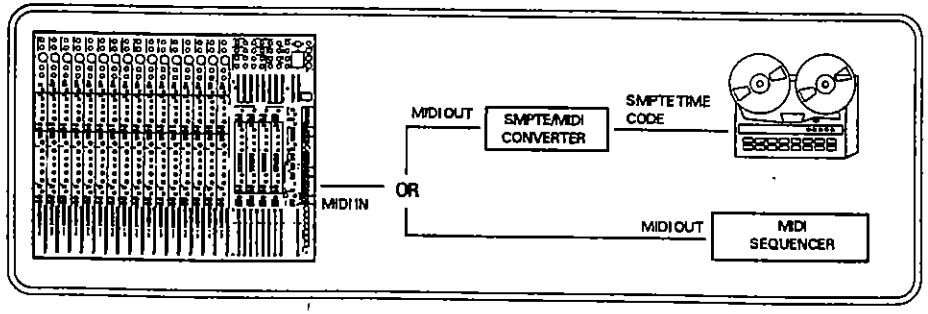

2. Record Your First Mix

- We will record some fader moves on channels 1 to 4. Press **RECORD** to put the system into record ready. The Record LED will flash to show this. Note that the **PLAY** LED automatically turns on.

- Move the faders on channels 1 to 4 to roughly the 0dB positions. Press PLAY on your sequencer/tape machine (if you are connected to V-EDIT you can press ENTER on the numeric keypad of the Atari, this will output MTC to the console). If you are correctly synced the SYNC LED will turn on and the RECORD LED will stop flashing and be on.

- Move the faders on channels 1 to 4. You can also turn some mutes on and off. Note that as you move the faders the EV LEDs will turn on to show that events are being recorded. Note also that the EV-LEDs turn off about a second after the fader stops moving. Stop the sequencer/tape machine (if you are connected to V-EDIT you can press 0 on the numeric keypad to stop outputing MTC). Note that the console automatically drops out of record.

- Rewind your sequencer/tape machine (or press the 0 again if you are connected to V-EDIT). Press PLAY on your sequencer/tape machine again and watch your mix being played back.

- As the mix plays back note that the EV LEDs will turn on as the fader events you recorded are played back. Note that the Null LEDs will turn on and off to show the position of the VCA relative to the fader position.

Thats it!. Recording your mix is as simple as that. Note that the console automatically detected whatever timingsync you used and synchronised to it. The following sections will now concentrate on the other features of the automation for managing and editing your mix.

3. Isolating Faders

Isolation effectively isolates the selected mute or fader from the control of the automation, giving you manual control over it. This is useful, for example, when you are in the process of mixing but want to regain manual control over a channel to record to multi-track for example. Next, we'll isolate the VCA on channel 4.

- Press the **ISOL** button. Then nudge the fader on channel 4 (note that, when used for data entry, the faders are velocity sensitive, i.e. a flick will select a fader, a smooth move will not). The EV LED will turn on to show that the VCA is isolated. Press **ISOL** again.

- Now when you play back the mix again the movements you recorded on the VCA of channel 4 will not be played. Similarly if you were in record mode, any movements you made on these channels would not be recorded. Note that the EV LED on channel 4 still turns on to show that an event has been recorded, but the Null LEDs do not change state showing that the VCA level is not changing.

4. Using Solo & Solo Safes

Your GS3V has a powerful Solo-in-Place facility. A Solo function will mute every channel on the console except for specific channels. This allows you to listen to channels in isolation without affecting the level or stereo image of the signal. Solo safes allow you to select channels that will not be muted during solo (e.g. your effects returns).

Solo-in-place is different from PFL (pre-Fade Listen) in the following respects. PFL allows you to listen to the channel signal in mono for level matching and is non-destructive to the LR mix. Solo-in-place allows you to listen to a channel signal post fader to match the level in the mix and is destructive to the LR mix. Generally use PFL when recording to multi-track; use solo-in-place when performing a mix-down.

- Press the **SOLO** button. All the mutes are now activated except for the effects sends and stereo return mutes (These are automatically set to 'Solo Safe'). Press a mute on the channel you want to listen to. This channel is now effectively soloed. If you exit Solo mode (press **SOLO** again) the channel you selected as solo will be remembered and called up the next time you select Solo.

Putting a channel into Solo-Safe means that it will not be muted when you enter Solo mode. The effects sends and stereo returns are made Solo-Safe by default (you can change this if you want).

5. Setting Up Groups

The V5 Automation System has a powerful grouping facility typically only found on very high-end automated consoles. Grouping effectively allows you to control many VCAs or mutes from a single fader or mute. With V5 Automation you can also have groups within groups within groups etc..

To set up a group you need to select a group master (which will control the group) and then the group slaves (which will be controled by the master, and which can also be masters of other groups). First we will set up some VCA groups on channels 5 to 8.

- First set the faders on channels 5 to 8 to the 0dB position. Press the **GROUP** switch to enter group programming mode.

- Nudge the fader on channel 5. The EV LED will start flashing to show that it is a group master.

- Next nudge the faders on channels 6, 7 and 8. Their EV LEDs will turn on showing that they are slaves of the currently selected master. Press **GROUP** again to exit group programming mode.

- Now move the fader on channel 5 up and down. The Null LEDs on the slaves will change showing that the slave VCAs are being controlled by the master fader on channel 5. If you move the master fader up 5dB it's slaves will also move up by 5dB in relation to their current positions.

You can also set up standard mute groups in a similar fashion. The next section shows you how to set up two different and extremely useful types of mute groups.

6. Setting Up Toggle Mute Groups

With standard mute groups the slaves always follow the state of the master, i.e. master mute on - all slaves on. A toggle group can be used whenever you need flip one set of mutes on, and another set of mutes off. To set set up mute a toggle group on channels 1 to 4 follow this procedure:

- Press **GROUP** and the **TOGGLE** to enter toggle group programming mode.

- Press the mute on channel 1. It's LED will start flashing to show that it's a group master.

- Next press the mutes on channels 2, 3 and 4. Their LEDs will turn on to show that they are slaves of the current master. Press **GROUP** again to exit group programming mode.

- Now turn on channel mutes 2 and 4, then press channel mute 1. Note that pressing the master toggles the states of the mutes in the group.

A possible application for Toggle Groups is as follows. Lets say we are using a synthesiser voice for the verses but are using a totally different voice for the choruses. We can feed the synthesiser into two seperate channels, with seperate EQ & aux send settings appropriate for the two voices. If we assign a **Toggle Group** to these two channels we can simply swap between the two channels, and the different voices, at the touch of a single button for the verse & choruses.

7. Setting Up A Solo Group

A solo group effectively gives you a 'local solo-in-place' anywhere on the console. To set set up a solo group on channels 5 to 8 follow this procedure:

- Press GROUP and then SOLO to enter solo group programming mode.
- Now press the mutes on channels 5, 6, 7 and 8. Their LEDs will turn on to show that they are members of the solo group. Press **GROUP** again to exit group programming mode.
- Press the mutes on channels 5, 6, 7 and 8. Note that pressing a mute will turn it off and all the other group members on.

A solo group can be useful when you have, say, 4 versions of a guitar break on your multi-track from which you need to make a composite track. Using a solo group will allow you to save various mix options for reference and playback before choosing the final version and erasing the source material. Note that only one solo group is allowed on the console.

8. Erasing Events From The Mix

We will now go through the process of erasing some of the fader moves that we recorded earlier on channels 1 to 4.

- Play back the mix that you recorded earlier. Then press **ERASE**. The LED will start to flash.
- Wait for a VCA event to happen on channel 1 (EV LED activating). Either during or after the event has passed, nudge the fader. It's EV LED will flash once to show that it's selected for deletion. Press **ERASE** again to delete the event.
- Now when you play back the mix the event will no longer be there.

V5 Automation allows you to delete individual VCA, mute or Patch Recall events, or you can delete all the events associated with a channel. To delete all events on a particular channel repeat the above procedure with the tape stopped (i.e. no sync). Now delete all VCA events on chennels 1 and 2 ready for the next section of the tutorial.

9. Editing The Mix In Trim Mode

For the last part of the tutorial we will go through the process of editing a fader move in trim mode. In trim mode fader movements are recorded as additions to the current moves. This lets you make small adjustments to fader moves or to add an offset to all the moves for a particular channel.

To demonstrate Trim Mode, record the following fader moves on channels 1 & 2. Starting at the bottom of the travel, move the fader up to the 0dB position, then down to the -5dB position, then down to the -10dB position. The effects of editing in trim mode are more apparent if you are using V-EDIT, or if you feed some audio through the channels. First we'll record a trim on channel 1's fader.

- Press **REL** to enter trim mode.
- Press **NULL** to enter free-null mode. Move the fader up to the 0dB position. Press **NULL** again to exit free-null mode.
- Press **RECORD** and start playing the mix.
- When the VCA starts moving up to the 0dB position, move the fader up to the + 5dB point. When the VCA starts moving down to the -5dB position return the fader back to the 0dB position.
- Stop recording.

When you play back the mix you will see that the VCA now moves up to the + 5dB point. You have added a 5dB offset to the VCA movement.

Next we'll record a trim on channel 2's fader.

- Press **REL** to enter trim mode.
- Press **NULL** to enter free-null mode. Move the fader up to the 0dB position. Press **NULL** again to exit free-null mode.
- Press **RECORD** and start playing the mix.
- When the VCA starts moving up to the 0dB position, move the fader up to the + 5dB point and leave it there.
- Stop recording.

When you play back the mix you will see that the VCA now has a 5dB offset added to the move you made. If there were any VCA moves further on in the mix, these too would have the 5dB offset added. If you record any new fader moves to the mix (not in trim mode) these moves would not have 5dB added to them.

10. Saving & Loading a Mix

If you are connected to V-EDIT you can save & load your mixes by selecting **Save** or **Open** from the **File** menu. To save your mix to a sequencer first put the sequencer into record. Then press **MIX** and then **DUMP**. The console will then send all mix data (including patches groups, isolates etc.) to the sequencer as System Exclusive MIDI data. Once in the sequencer the mix data can be archived to floppy disk. To reload a mix, set the sequencer to transmit the the mix data to the console. The console will automatically recognise the data and load in the mix.

SETTING UP YOUR OWN PERSONAL AUTOMATION SYSTEM

Plan ahead carefully before you start plugging up the equipment. This should prevent time consuming problems later, and ensure that you get the best from your system. Please read the GS3 AUDIO SYSTEMS OWNER MANUAL before installing the audio cables. The way you connect the console automation system depends on the equipment you want to synchronise the automation to, and the way you wish to work. The following interconnection diagrams illustrate the basic configurations. Depending on the other MIDI equipment in your setup you may need to install a suitable MIDI patchbay, splitters or merge boxes. Refer to the owner manuals of your other MIDI equipment or to your local studio supplier should you require further assistance.

The GS3V does not require any external computer or controller to operate as a conventional recording console, with the additional benefits of VCA fader and mute SNAPSHOT memories, mute and fader grouping, and programmable SOLO-IN-PLACE.

To utilise the GS3V for real-time automation, you require a multitrack tape machine with SMPTE time code on one track and a SMPTE/MIDI converter (see setup including multitrack, timecode and MIDI sequencer). Alternatively, if you are using a MIDI based sequencer, SMPTE time code is not required (see basic stand alone MIDI setup).

The highest level of operation of the GS3V is to use it running the V-EDIT program which requires an Atari ST, TOS V1.2 or later, a monochrome monitor, and a SMPTE/MIDI converter for use with a tape based format (see setup including multitrack, timecode, MIDI sequencer and V-EDIT).

SETUP INCLUDING MULTITRACK AND V-EDIT

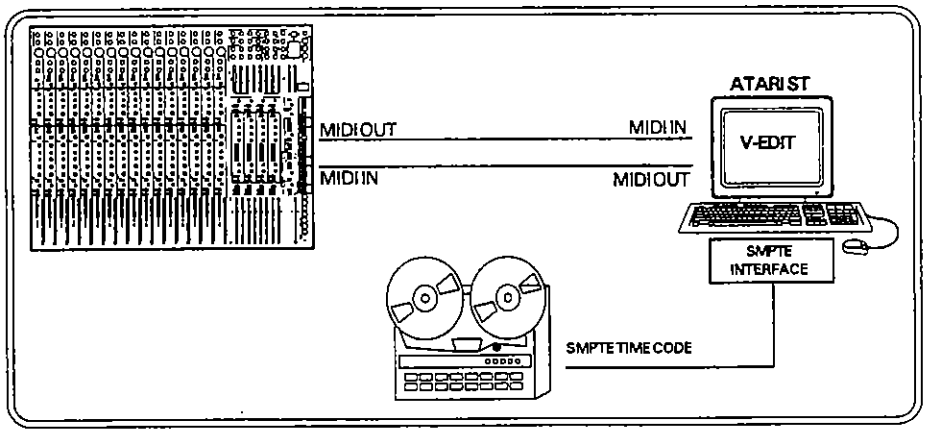

BASIC STAND ALONE MIDI SETUP

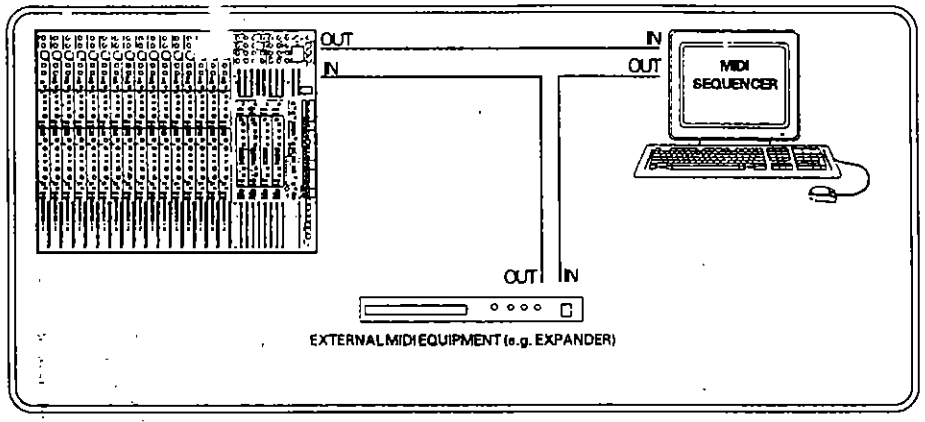

SETUP INCLUDING MULTITRACK AND MIDI SEQUENCER

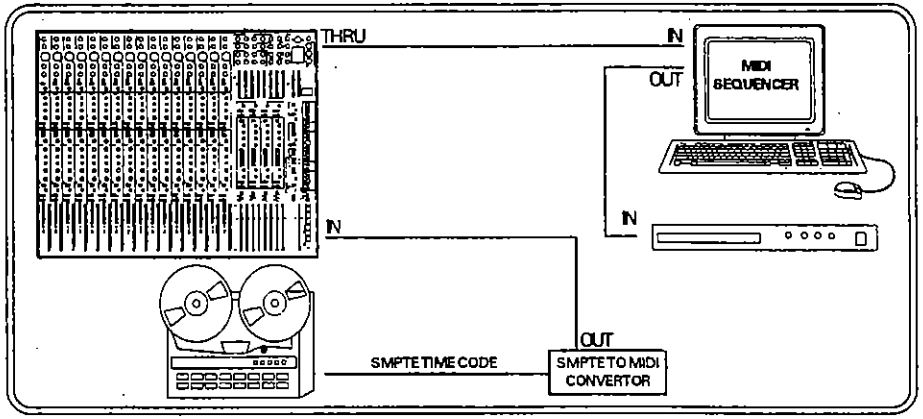

SETUP INCLUDING MULTITRACK, MIDI SEQUENCER AND V-EDIT

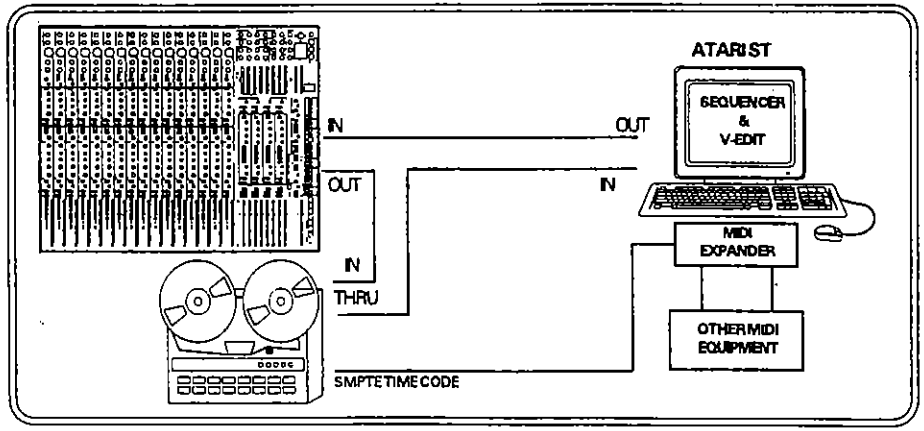

FUNCTION KEY APPLICATIONS

FUNCTION KEYS

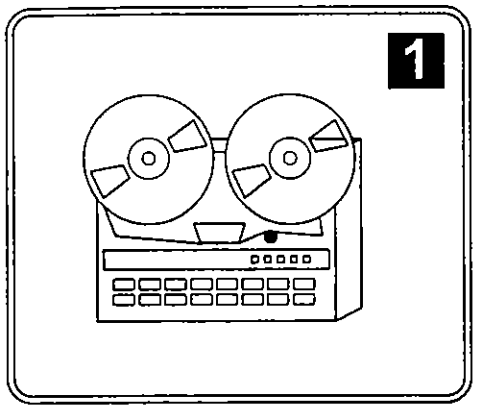

If your tape machine can transmit and receive MIDI, you can use your function keys as a second set of transport controls.

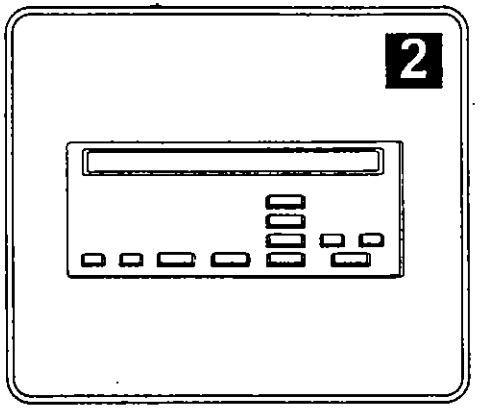

You can use your function keys to control any other MIDI compatible outboard equipment (e.g. Sequencers, Reverbs etc.)

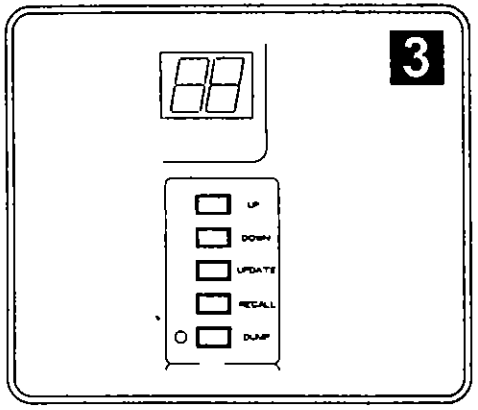

You can use your function keys to recall specific patch numbers.

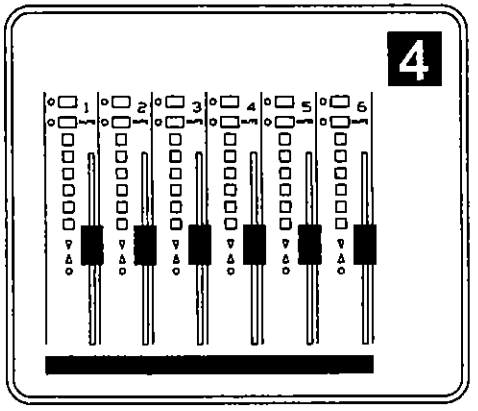

You can use your function keys to toggle a specific set of mutes (mute presets).

APPLICATION 1:
FUNCTION KEYS AS TAPE MACHINE TRANSPORT CONTROLS

The Function keys are factory programmed for transport control of MIDI Machine Control compatible tape machines. The most commonly used tape transport commands have been selected and programmed on the function Keys. If you have an MMC based tape machine you may decide to mark the the function key write-on strip with the corresponding tape transport command, as below.

F7 - LOCATE
F6 - STOP
F5 - PLAY
F4 - FAST FORWARD WIND
F3 - REVERSE WIND
F2 - INITIALISE (Fostex R8 only)
F1 - SET LOCATE (Fostex R8 only)

The FUNCTION KEY EDITOR in V-EDIT provides access to programming the function keys with other MMC commands (see MIDI specifications). Follow the same programming procedures as in Application 2: Programming Function Keys to Control External Equipment.

The function keys provide for key press and release MIDI messages. The above factory defaults only use the key press MIDI message. It is possible to cascade two MMC commands for press and release on one key, e.g. for Rewind and Stop.

APPLICATION 2:
CONTROLLING EXTERNAL EQUIPMENT

FUNCTION KEYS

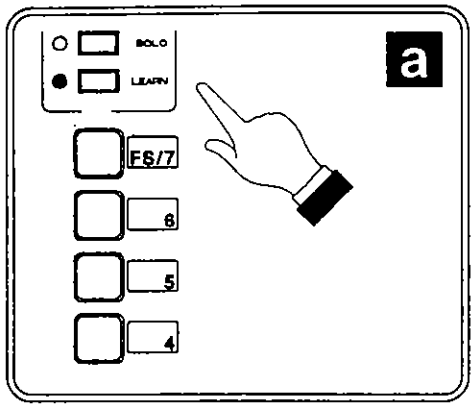

Put the function keys into learn mode. To do this press the **LEARN** switch; the LED will light to confirm the selection.

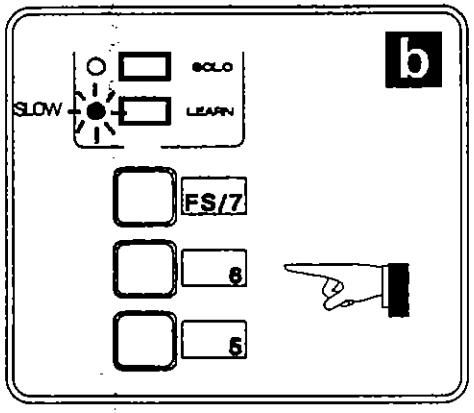

Select which function key is to be programmed. To do this press a **FUNCTION KEY**. The Learn LED will flash slowly.

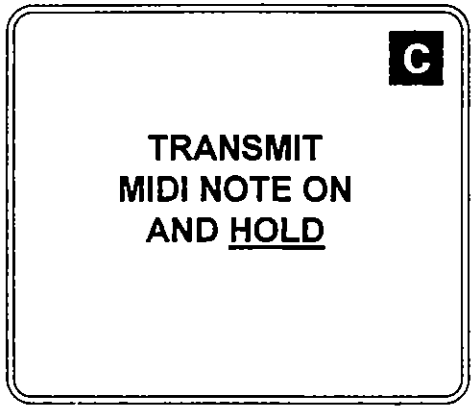

Transmit **MIDI NOTE ON** command to the console by pressing the appropriate key on your external equipment. Remember to **HOLD DOWN THE KEY UNTIL STEP E.**

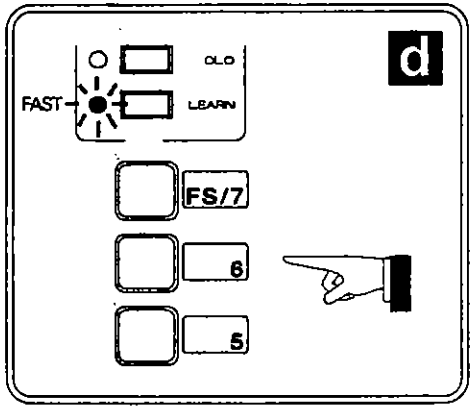

Press the selected function key a second time. The learn LED will flash quickly to confirm the operation.

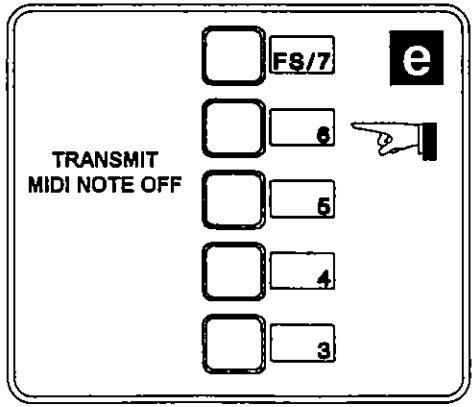

Transmit **MIDI NOTE OFF** command to the console by **RELEASING** the pressed key on your external equipment. Then press the **FUNCTION KEY** again to exit learn mode.

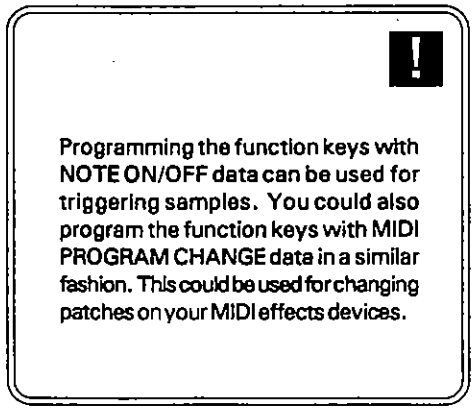

APPLICATION 3:
PROGRAMMING A FUNCTION KEY TO RECALL A PATCH

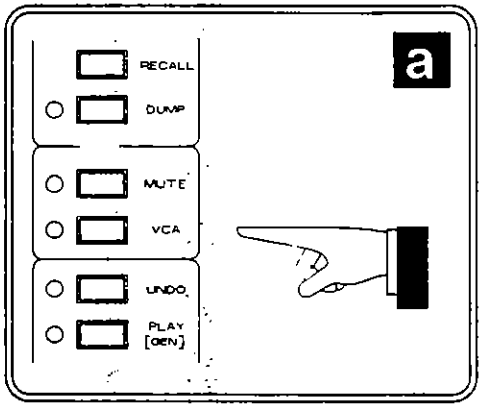

If you only want mutes to be recalled then press the **MASTER MUTE ENABLE** switch. If you want only **VCA's** then press **VCA**. If both are required press **BOTH**.

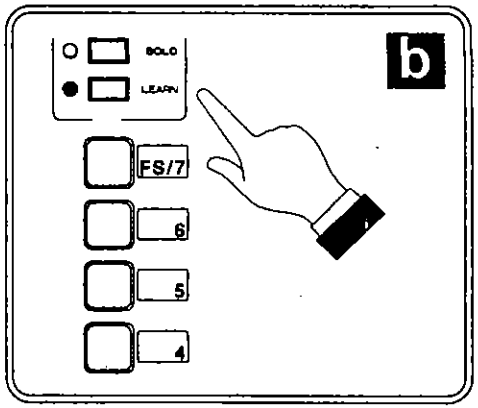

Put the function keys into learn mode. To do this press the **LEARN** switch, the LED will light to confirm the selection.

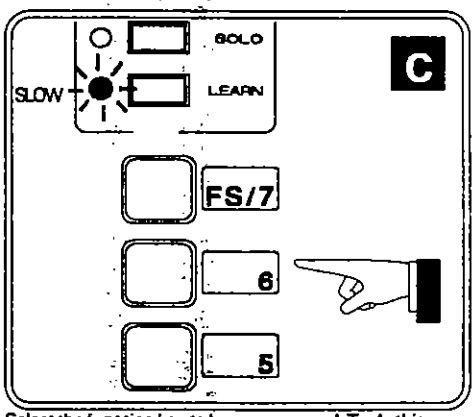

Select the function key to be programmed. To do this press a **FUNCTION KEY**. The learn LED will flash slowly. The display will show the function key number.

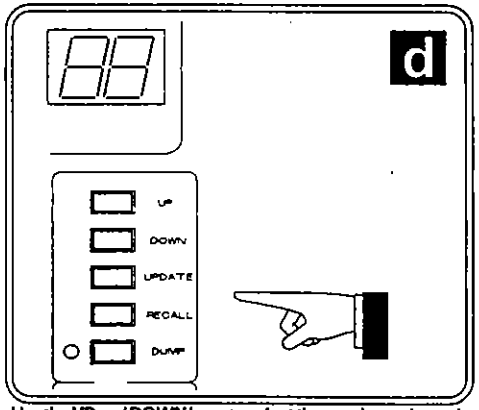

Use the **UP** and **DOWN** keys to select the patch number to be programmed into the function key when it is **PRESSED**. Then press **RECALL**.

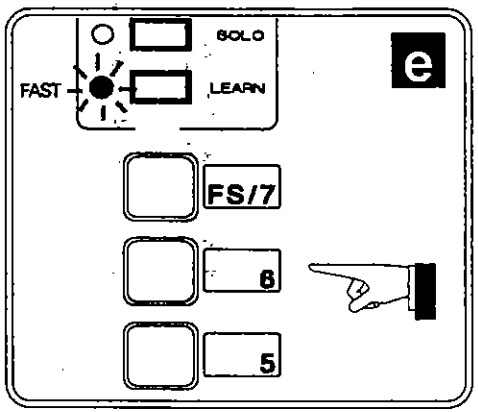

Press the function key again. The learn LED will flash quickly. Repeat step **D** to select the patch to be recalled when the function key is **RELEASED**.

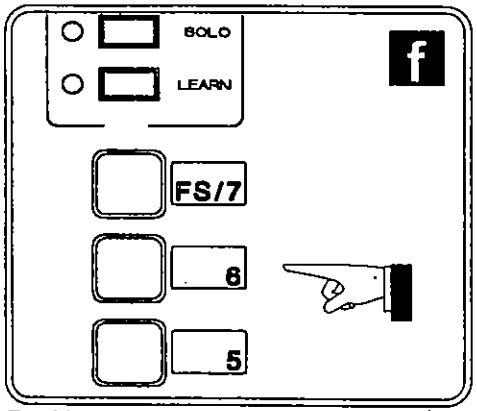

To exit learn mode, press the function key again. The learn LED will extinguish.

APPLICATION 4: PROGRAMMING MUTE TOGGLE PRESETS

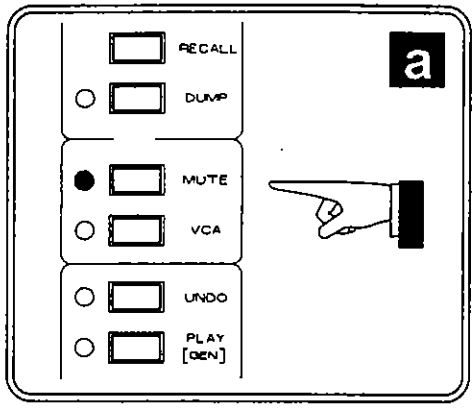

Press the **MASTER MUTE ENABLE** switch; the LED will light to confirm the selection has been made.

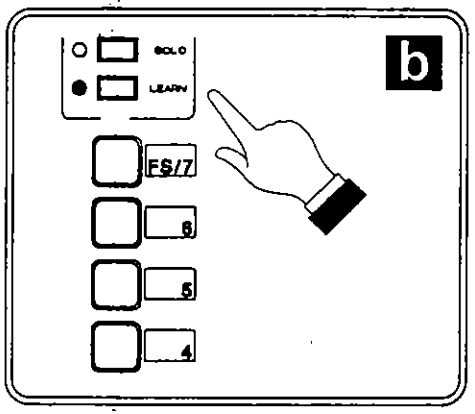

Put the function keys into learn mode. To do this press the **LEARN** switch; the LED will light to confirm the selection.

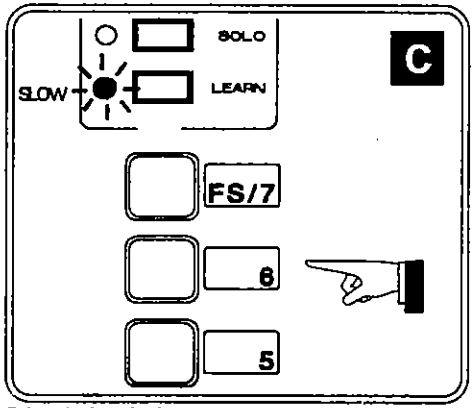

Select the function key to be programmed. To do this press a **FUNCTION KEY**. The learn LED will flash slowly to indicate the selection has been made.

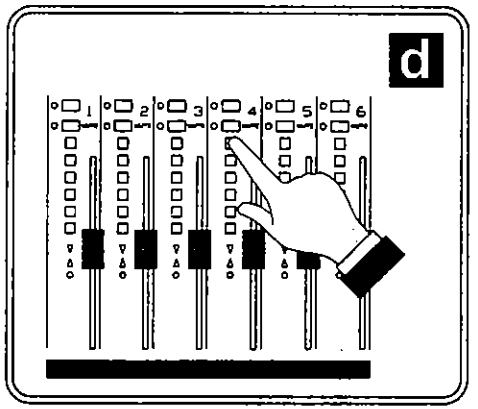

Select which **MUTES** are to be recalled in the toggle preset, when the function key is **PRESSED**. To do this; press the desired MUTE switches (**15 MUTES MAXIMUM**)

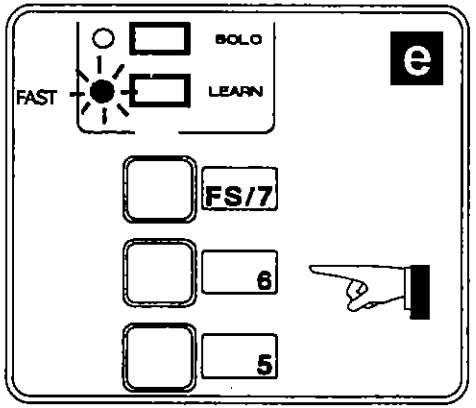

Press the function key again. The Learn LED will flash quickly. Repeat step D to select which MUTES are recalled when the function key is **RELEASED**.

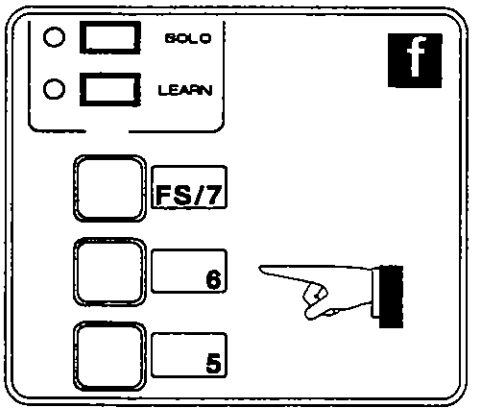

To exit learn mode, press the function key again. The Learn LED will extinguish.

SAVING FUNCTION KEY SET-UPS TO EXTERNAL EQUIPMENT

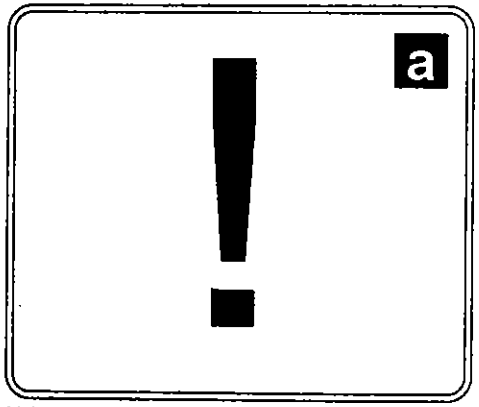

Make sure your equipment is correctly connected as in the **set-up section**, and that your external equipment is able to accept MIDI information.

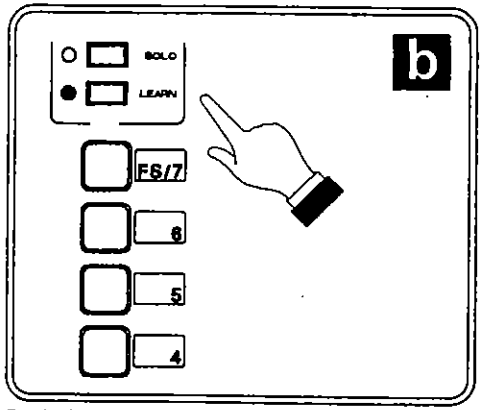

Put the function keys into learn mode. To do this press the **LEARN** switch; the LED will light to confirm the selection.

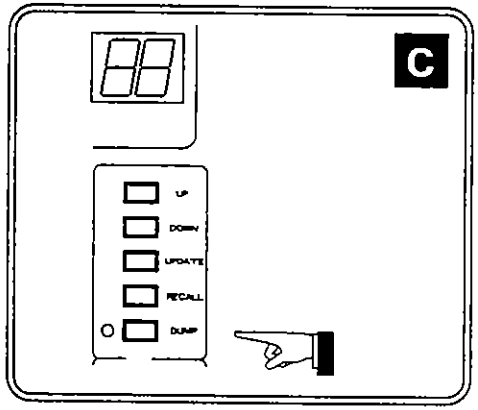

To save the contents of the function keys to external equipment, press the **DUMP** switch.

WHAT IS V-EDIT

V-EDIT is a graphical display program for the GS3V console. V-EDIT's purpose is to display the actual VCA levels when replaying an automated mix, and to allow you to edit and archive the mix, as well as configure the console settings. Any function on the GS3V can also be done from V-EDIT. V-EDIT has additional features not available on the GS3V. These are:

- the ability to view the *actual VCA levels* during a mix
- setting up groups & programming function keys while the console is in sync.
- naming channels
- setting the SMPTE generator start time

USING V-EDIT

V-EDIT has been designed to be easy and intuitive to operate. All on screen functions operate in the same way as the console's functions. All operations are mouse driven. Keyboard hot keys are also available for commonly used operations. VCA positions can be moved by clicking and dragging the mouse on the VCA icon. Refer to the 'Help' menu for more specific information on using V-EDIT.

RUNNING V-EDIT

V-EDIT is provided on a single 3.5" floppy disk found on the inside front cover of this manual. V-EDIT runs on any Atari ST1040 or Mega 1/2/4. In order to present enough information on the screen a monochrome monitor is also required.

First connect the GS3 MIDI out to the Atari MIDI in, and the Atari MIDI out to the GS3 MIDI in. Power up the console and turn on the Atari computer. Place the V-EDIT disk provided with this manual into the disk drive and double click on the A drive icon. The following window will appear:

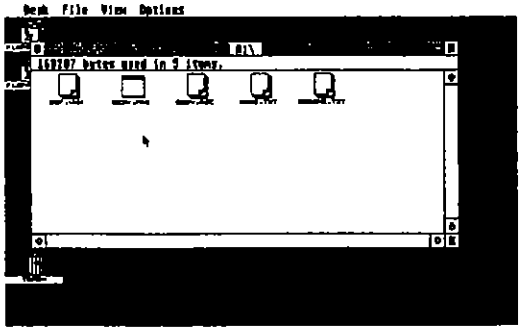

First read the files MROS.TXT and GS3V.TXT for additional important information about using V-EDIT. To do this double click on the icons & select SHOW from the subsequent menu.

To run V-EDIT double click on the GS3V.PRG icon. The following window will appear:

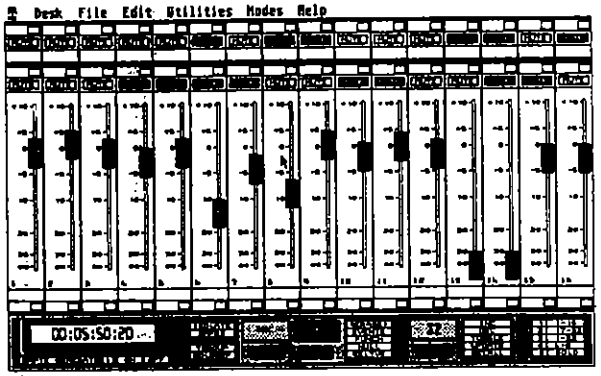

If V-EDIT is connected to the GS3 the faders and mutes on the screen will reflect the settings on the console. If V-EDIT and the GS3 are not connected at this stage then connect them up, and select **Connect GS3V** from the **Utilities** menu. This will request the GS3 to dump all of it's settings to V-EDIT. Press mutes & move faders on the console and you will see the corresponding changes on the V-EDIT screen.

CHANNEL STRIP LAYOUT

The layout of the channel strip is shown below:

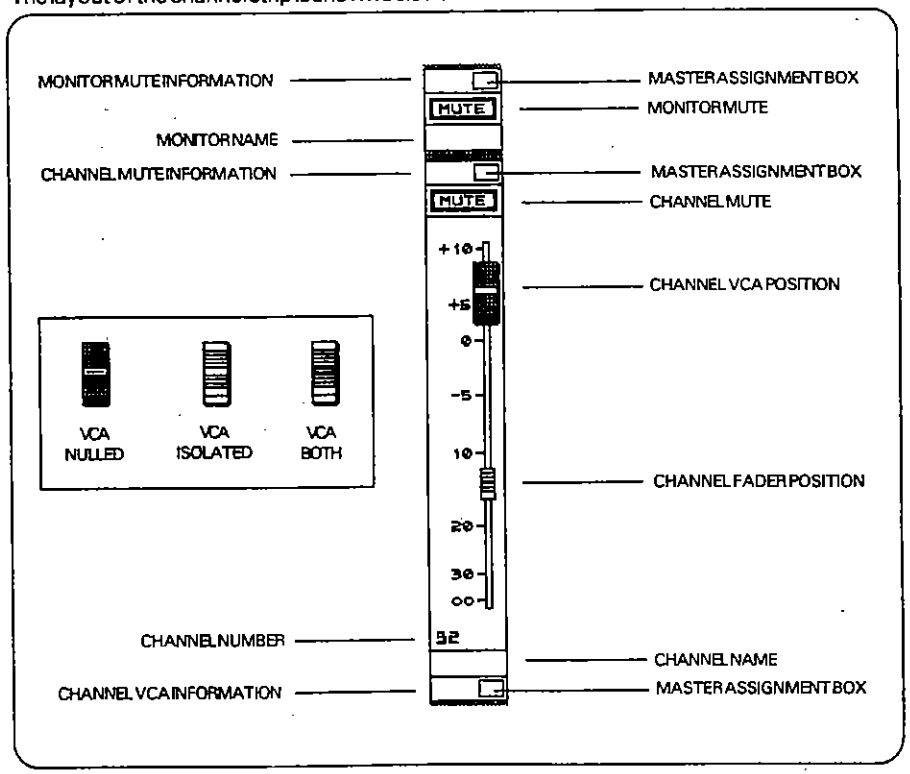

The screen is split into 3 sections: the menu bar at the top, the main screen in the middle & the control panel at the bottom. Wheras the menu bar and control panel remain fixed, there are 4 different main screens. To access the different screen press keys 1 to 4 on the keyboard, select a screen from the control panel as shown:

Screen 1	- channels 1 to 16
Screen 2	- channels 17 to 32
Screen 3	- channels 1 to 32
Screen 4	- LR fader & Aux Send/ Stereo Return Mutes

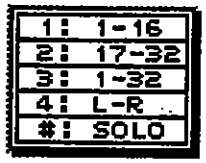

SYSTEM SETUP

Shown below is a typical MIDI system setup, using V-EDIT, upon which you can base your own MIDI setup. It is important to bear in mind, when setting up your system, that the GS3 & V-EDIT must have 2 way MIDI communication (i.e. GS3 MIDI out to V-EDIT MIDI in, and V-EDIT MIDI out to GS3 MIDI in). All connections shown in the examples are MIDI except where otherwise stated.

GS3V, V-EDIT and Multi-Track with ATARI based Sequencer

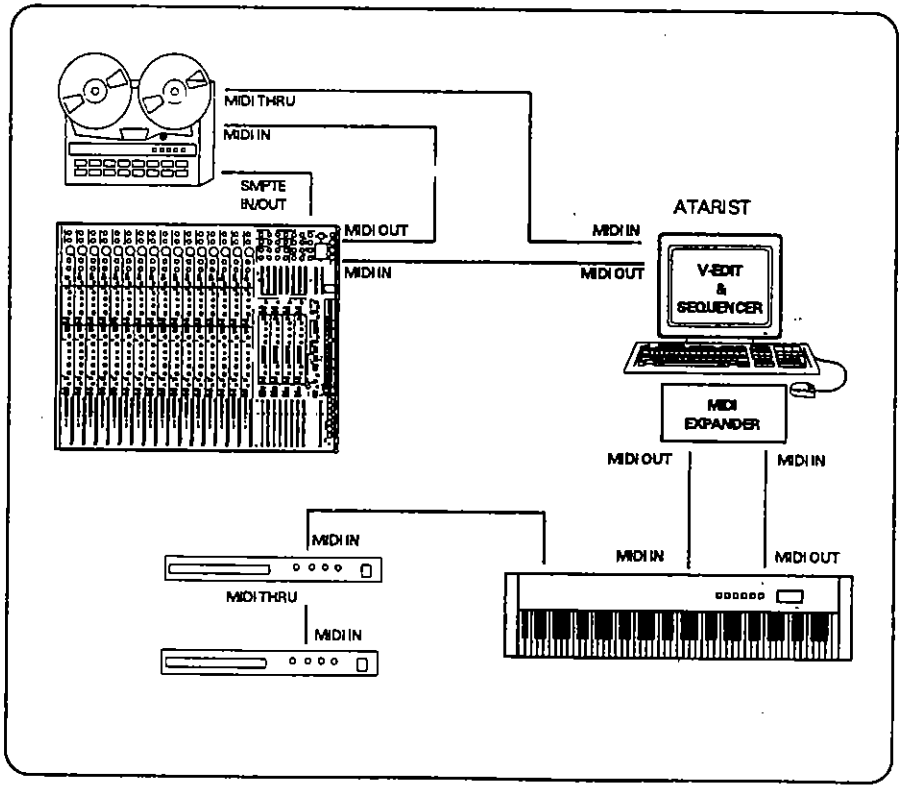

This setup shows the GS3V and V-EDIT in a typical MIDI setup with a sequencer, MIDI keyboard & expanders. The sequencer can run alongside V-EDIT on the Atari using either M-ROS or Softlink. It is recommended that you use seperate MIDI ports for your console & synthesizer MIDI data by using a MIDI port-expander device.

In this configuration the console gets it's sync from the tape-machine via the optional GS3V SMPTE module (contact your dealer to obtain a SMPTE Option). The console will then output MTC to the Atari where it can be used to synchronise the sequencer (the console must have Mode 12 MTC Regen On enabled. See the section on Modes).

If do not have the SMPTE Module fitted, and your MIDI port-expander device includes a SMPTE reader, you can also connect the SMPTE output from the tape-machine directly to it.

If your tape-machine is MMC (MIDI Machine Control) compatible, using the above configuration allows you to control the tape transport from the console's Function Keys. Otherwise connect the MIDI out from the GS3 directly to the MIDI In of the Atari ST.

INTRODUCTION

MODES

Console modes are used to configure the automatior to suit your particular setup.

Patch Auto-increment

AUTO INC. OFF	*MODE 0*	Disables patch number auto-increment.
AUTO INC. ON	*MODE 1*	Enables patch number auto-increment on.

MIDI Playback

AUTO MIDI PB OFF	*MODE 2*	Disables automatic MIDI playback.
AUTO MIDI PB ON	*MODE 3*	Enables automatic MIDI playback.

Console Modes

OFF	*MODE 4*	If automation is being used independently of any other equipment. No automation MIDI information is received or transmitted to external equipment.
BASIC	*MODE 5*	If automation is being used with basic MIDI equipment that does not under stand mixing consoles. The console transmits & standard MIDI data that is not specific to the console's automation.
ENHANCED	*MODE 6*	If automation is being used with other manufacturers' software that is able to interface with the automation system (e.g. V-EDIT). This mode enables the console to communicate MIDI automation data at it's full potential, providing maximum VCA resolution and can utilise the full range of facilities on V-EDIT.

SMPTE Generator Frame Rate (only if the SMPTE Option is fitted)

24 Frames/s	*MODE 7*	Sets the SMPTE generator frame rate to 24 frames per second.
25 Frames/s	*MODE 8*	Sets the SMPTE generator frame rate to 25 frames per second.
30 Frames/s	*MODE 9*	Sets the SMPTE generator frame rate to 30 frames per second.
Drop Frame	*MODE 10*	Sets the SMPTE generator frame rate to Drop Frames

MIDI Time Code

MTC OUT OFF	*MODE 11*	If the console is synchronised to SMPTE (via SMPTE Option) or to external MTC the console will not output it to MIDI OUT.
MTC OUT ON	*MODE 12*	The console will output MTC to MIDI OUT if it received on MIDI IN or is synchronised to the SMPTE Option.

Mirror Mode

MIRROR OFF	*MODE 13*	When programming the console from V-EDIT, all functions will not be mirrored on the console. This allows you to programe the console 'in the background' (e.g. setting up groups while the console is playing a mix).
MIRROR ON	*MODE 14*	When programming the console from V-EDIT, all functions will be mirrored on the console.

The automation factory defaults are:

- MODE 0: Auto-increment OFF
- MODE 3: MIDI playback ON
- MODE 6: Enhanced Mode
- MODE 8: 25 frames/s SMPTE generator
- MODE 12: MTC output is ON
- MODE 14: Mirror Mode ON

CHANGING THE CONSOLE MODE

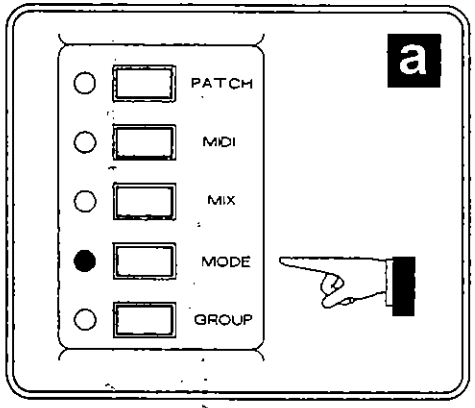

To select console **MODE**, press the **MODE** switch; the **LED** will light to confirm the selection has been made.

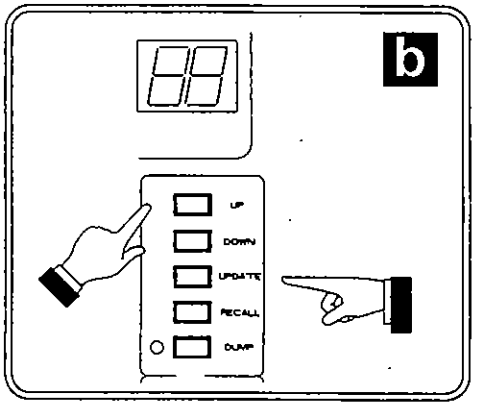

Use the **UP** and **DOWN** keys to select required mode number 1 to 14. When the required mode number is displayed, press **UPDATE** to set. Note, disabled **CONSOLE MODE NUMBERS** will **FLASH**.

CHANGING THE CONSOLE MIDI CHANNEL

To enable the mixer's automation to communicate with the MIDI equipment it is attached to, it is necessary to set both the MIDI equipment and the automation to the same transmit/receive channel. There are 16 MIDI channels available. To set the MIDI channel follow the steps shown below. The factory default MIDI channel is 16.

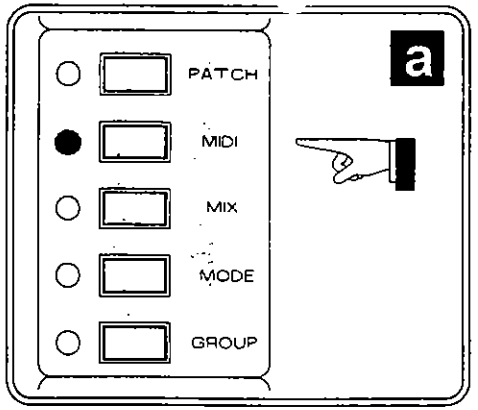

To select the **MIDI CHANNEL**, press the **MIDI** switch; the **LED** will light to confirm the selection has been made.

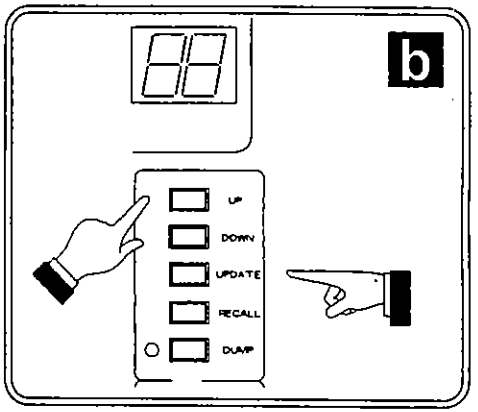

Use the **UP** and **DOWN** keys to select the required MIDI channel number (1 to 16). When required number is displayed, press **UPDATE** to set.

TURNING LOCAL MODE ON AND OFF

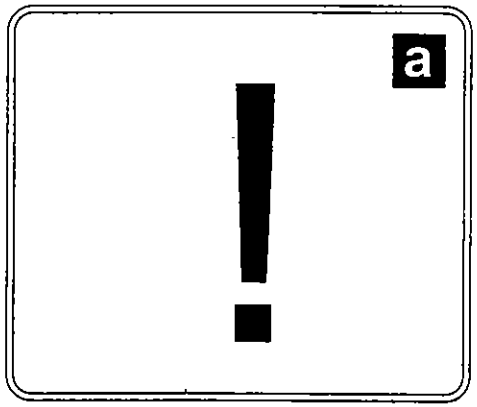

Local **MODE OFF** is only used when automation MIDI data is echoed back to the console by an external MIDI recording device e.g. sequencer.

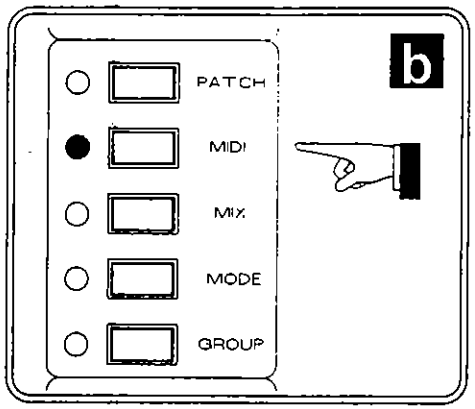

To select **LOCAL MODE ON/OFF** press the **MIDI** switch; the LED will light to confirm the selection has been made.

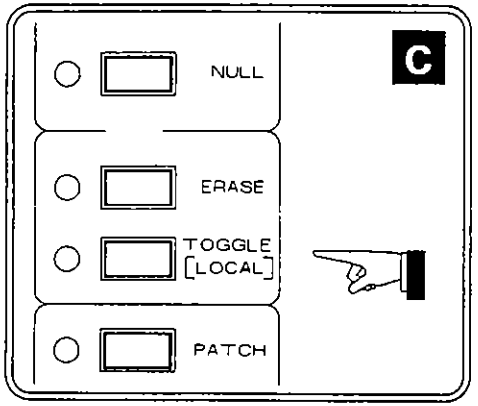

Press the **TOGGLE** switch to set **LOCAL MODE ON** or **OFF**; the LED will light for local mode on and extinguish for local mode off.

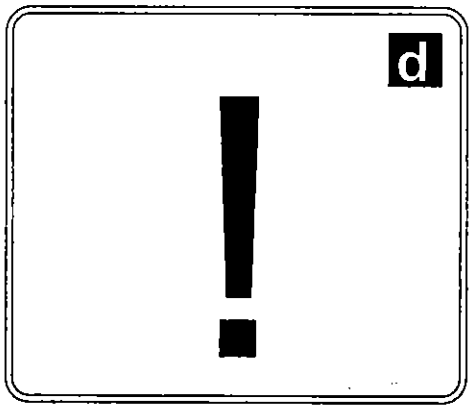

The console power up default is **LOCAL MODE ON.** To change the power-on default to **LOCAL MODE OFF** follow step **E**.

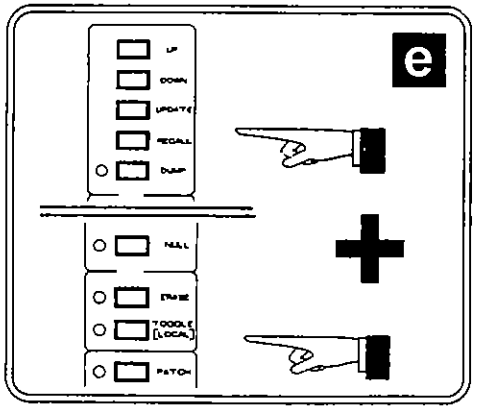

To set the console power up default to **LOCAL MODE OFF**, press **TOGGLE** and **UPDATE** simultaneously.

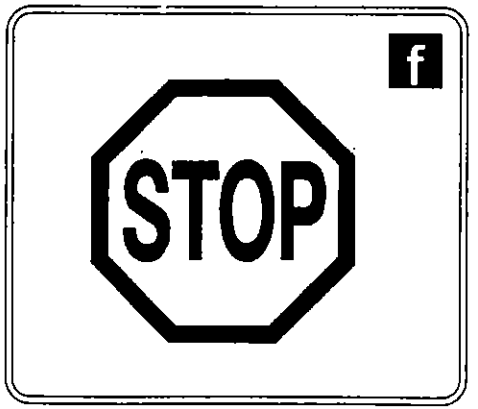

If the console mutes and VCAs do not react to inputs from you, check and make sure that **LOCAL MODE IS ON.**

DISPLAYING THE SOFTWARE VERSION NUMBER

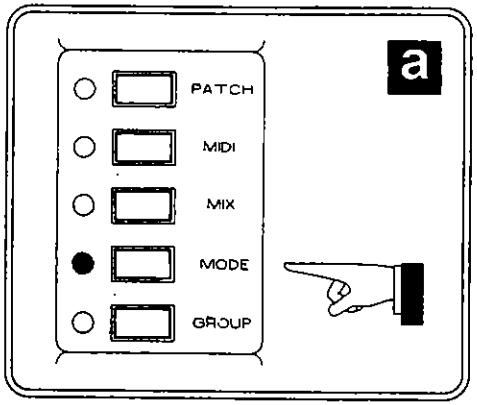

First press the **MODE** switch. The **MODE** LED will turn on to confirm selection.

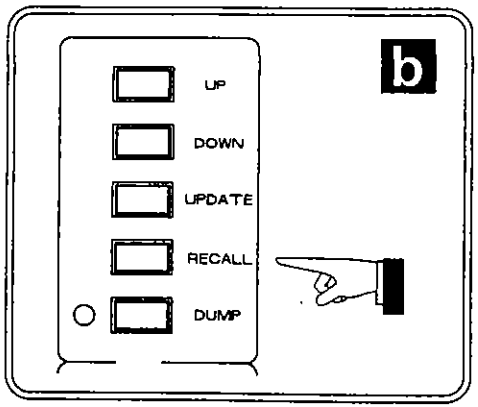

Press **RECALL** and the software version will be displayed. For example, a '4' in the display indicates software version **V5.04**.

PERFORMING A CONSOLE HARD RESET

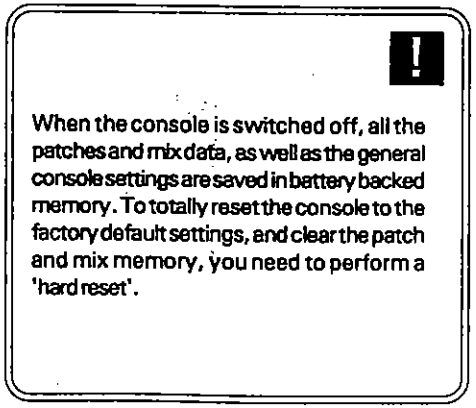

When the console is switched off, all the patches and mix data, as well as the general console settings are saved in battery backed memory. To totally reset the console to the factory default settings, and clear the patch and mix memory, you need to perform a 'hard reset'.

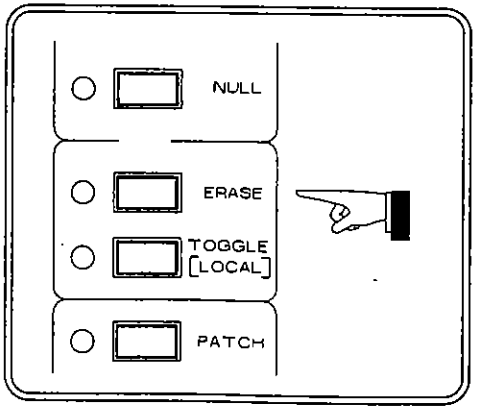

To perform a console hard reset, press & HOLD the **ERASE** switch when powering on the console.

MIDI SPECIFICATION

MIDI IMPLEMENTATON CHART

MODEL: GS3V - 16
DATE: 18-2-93
VERSION: V5

	Function	Transmitted	Recognized	Remarks
Channel	Default Channel	16	16	See 1
Channel	Basic Channel	1 - 16	1 - 16	MEMORIZED
Mode	Default Messages Altered	N/A	N/A	
Note Number	True Voice	24 - 63 *******	24 - 64	See 2
Velocity	Note On Note Off	0, V = 64 X	0 X	
After Touch	Keys Channels	X 0	X 0	See 3
Pitch Bender		0	0	See 3
Control Change	7 16 - 47 116 - 117	0 0 0	0 0 0	See 4 See 4 See 5
Program Change	True number	0 - 33	0 - 33	
System Exclusive		0	0	Used by V-EDIT
System Common	Song Pos Song Sel Tune	0 X X	0 X X	
System Real Time	Clock Commands	0	0	Start, Stop, Continue
Aux Messages	Local On/Off All Notes Off Active Sense Reset	0 X X X	0 X X X	

Notes:

1 - MIDI Mode enabled
2 - GS3V-24 = 24 - 79, GS3V-32 = 24 - 95
3 - Only in Enhanced Mode
4 - Only In Basic Mode

Mode 1: OMNI ON, POLY
Mode 2: OMNI ON, MONO
Mode 3: OMNI OFF, POLY
Mode 4: OMNI OFF, MONO

0 = YES
X = NO

MUTE TRANSLATION TABLE

HEX	DEC	CHN	MON	A	B	C
00	0			C3		
01	1			C#3		
02	2			D3		
03	3			D#3		
04	4			E3		
05	5			F3		
06	6			F#3		
07	7			G3		
08	8			G#3		
09	9			A3		
0A	10			A#3		
0B	11			B3		
0C	12			C2		C0
0D	13			C#2		C#0
0E	14			D2		D0
0F	15			D#2		D#0
10	16			E2		E0
11	17			F2		F0
12	18			F#2		F#0
13	19			G2		G0
14	20			G#2		G#0
15	21			A2		A0
16	22			A#2		A#0
17	23			B2		B0
18	24	SR1		C1	C0	C1
19	25		FX1	C#1	C#0	C#1
1A	26	SR2		D1	D0	D1
1B	27		FX2	D#1	D#0	D#1
1C	28	SR3		E1	E0	E1
1D	29		FX3	F1	F0	F1
1E	30	SR4		F#1	F#0	F#1
1F	31		FX4	G1	G0	G1

HEX	DEC	CHN	MON	A	B	C
20	32	1	*	G#1	G#0	G#1
21	33		1	A1	A0	A1
22	34	2		A#1	A#0	A#1
23	35		2	B1	B0	B1
24	36	3		C0	C1	C2
25	37		3	C#0	C#1	C#2
26	38	4		D0	D1	D2
27	39		4	D#0	D#1	D#2
28	40	5		E0	E1	E2
29	41		5	F0	F1	F2
2A	42	6		F#0	F#1	F#2
2B	43		6	G0	G1	G2
2C	44	7		G#0	G#1	G#2
2D	45		7	A0	A1	A2
2E	46	8		A#0	A#1	A#2
2F	47		8	B0	B1	B2
30	48	9		c0	C2	C3
31	49		9	c#0	C#2	C#3
32	50	10		d0	D2	D3
33	51		10	d#0	D#2	D#3
34	52	11		e0	E2	E3
35	53		11	f0	F2	F3
36	54	12		f#0	F#2	F#3
37	55		12	g0	G2	G3
38	56	13		g#0	G#2	G#3
39	57		13	a0	A2	A3
3A	58	14		a#0	A#2	A#3
3B	59		14	b0	B2	B3
3C	60	15		c1	C3	C4
3D	61		15	c#1	C#3	C#4
3E	62	16		d1	D3	D4
3F	63		16	d#1	D#3	D#4

HEX	DEC	CHN	MON	A	B	C
40	64	17		e1	E3	E4
41	65		17	f1	F3	F4
42	66	18		f#1	F#3	F#4
43	67		18	g1	G3	G4
44	68	19		g#1	G#3	G#4
45	69		19	a1	A3	A4
46	70	20		a#1	A#3	A#4
47	71		20	b1	B3	B4
48	72	21		c2	C4	C5
49	73		21	c#2	C#4	C#5
4A	74	22		d2	D4	D5
4B	75		22	d#2	D#4	D#5
4C	76	23		e2	E4	E5
4D	77		23	f2	F4	F5
4E	78	24		f#2	F#4	F#5
4F	79		24	g2	G4	G5
50	80	25		g#2	G#4	G#5
51	81		25	a2	A4	A5
52	82	26		a#2	A#4	A#5
53	83		26	b2	B4	B5
54	84	27		c3	C5	C6
55	85		27	c#3	C#5	C#6
56	86	28		d3	D5	D6
57	87		28	d#3	D#5	D#6
58	88	29		e3	E5	E6
59	89		29	f3	F5	F6
5A	90	30		f#3	F#5	F#6
5B	91		30	g3	G5	G6
5C	92	31		g#3	G#5	G#6
5D	93		31	a3	A5	A6
5E	94	32		a#3	A#5	A#6
5F	95		32	b3	B5	B6

CHN: CONSOLE CHANNEL INPUT
MON: CONSOLE MONITOR INPUT
SR: STEREO RETURN
FX: EFFECTS SEND

A: Steinberg Pro 24
B: AKAI, YAMAHA, KORG, CUBASE, C-LAB EQUIPMENT
C: ROLAND EQUIPMENT

VCA/FADER TRANSLATION TABLE

Console Channel	Basic Mode Faders & VCAs		Enhanced Mode Faders		Enhanced Mode VCAs	
	Controller		Aftertouch		Pitchbend.	
	HEX	*DEC*	*HEX*	*DEC*	*HEX*	*DEC*
1	10	16	0	0	0	0
2	11	17	1	1	1	1
3	12	18	2	2	2	2
4	13	19	3	3	3	3
5	14	20	4	4	4	4
6	15	21	5	5	5	5
7	16	22	6	6	6	6
8	17	23	7	7	7	7
9	18	24	8	8	8	8
10	19	25	9	9	9	9
11	1A	26	A	10	A	10
12	1B	27	B	11	B	11
13	1C	28	C	12	C	12
14	1D	29	D	13	D	13
15	1E	30	E	14	E	14
16	1F	31	F	15	F	15
17	20	32	10	16	10	16
18	21	33	11	17	11	17
19	22	34	12	18	12	18
20	23	35	13	19	13	19
21	24	36	14	20	14	20
22	25	37	15	21	15	21
23	26	38	16	22	16	22
24	27	39	17	23	17	23
25	28	40	18	24	18	24
26	29	41	19	25	19	25
27	2A	42	1A	26	1A	26
28	2B	43	1B	27	1B	27
29	2C	44	1C	28	1C	28
30	2D	45	1D	29	1D	29
31	2E	46	1E	30	1E	30
32	2F	45	1F	31	1F	31

V5 SOFTWARE MIDI SPECIFICATION

1. CHANNEL MESSAGES

'n' always = MIDI channel number
(..) means usually ommited due to running status.

1.1 BASIC MODE

Mutes: 9n,ch,vv,[9n],ch,0
- vv: > = 040H = muteon, > 0 < 03FH = muteoff
- ch: console channel number (see MIDI translation chart)

VCA's: Bn,ch,pp
- pp: 127 = unity, 0 = 117dB attenuation
- ch: console channel number + 16 (ie 010H-04FH)
- n: L-R VCA = 7 (& 8 if right fader present)

MIDI Local mode: Bn,7A,xx
- xx: 0=off, 1=on

Patch: Cn,pp
- pp: Patch no. in HEX 0H - 01FH = 1 - 32

N.B. Patch attributes taken from current prevailing setting.

1.2. ENHANCED MODE

Faders: An,ch,ff,(An),ch,ii
- ii: Absolute position - integer, range 0 - 117dB
- ch: console channel number + 64, 040H = 1 to 07FH = 64
- ff: Absolute position - fraction, range 0 - .99dB
- n: console channel number 0 = 1 to 03FH = 64

Mutes: Bn,ww,ch
- ch: channel number (see MIDI translation chart)
- ww: 073H = toggle, 074H = muteon, 075H = muteoff

Patch: Bn,03,mm,Cn,pp
- pp: Patch # in HEX 0H - 020 = 0 - 32
- mm: Bit 0 = 1 = set MUTE attribute, = 0 = off
  Bit 1 = 1 = set VCA attribute, = 0 = off
- n: Set Patch attributes, tx'd before Program Change message

L-R VCA: Bn,ww,ff,(Bn),ww,ii
- ii: Absolute position - integer, range 0 - 117dB
- ww: L-R or L VCA = 09, R = 0B (if present)
- ff: Absolute position - fraction, range 0 - .99dB
- n: L-R or L VCA = 08, R = 0A (if present)

L-R Fader: Bn,ww,ff,(Bn),ww,ii

- ii — Absolute position - integer, range 0 - 117dB
- (Bn) — L-R or L Fader = 0D, R = 0F (if present)
- ff — Absolute position - fraction, range 0-.99dB
- ww — L-R or L Fader = 0C, R = 0E (if present)

Master Event Prefix:

Bn,ww,ch

- ch — 0-63 VCA channel number, or 0-127 Mute number
- ww — id:
  - 50 Master VCA absolute ON
  - 51 Master VCA absolute OFF
  - 54 Master mute toggle
  - 55 Master mute on
  - 56 Master mute off

Master L/R/LR Messages:

Bn,ww,xx

- xx — Data see id....
- ww — id:
  - 5A L-R or L fader Isolation status, xx..1 = off, 0 = on
  - 5B L-R or L fader Punch status, xx..1 = off, 0 = on
  - 5C R fader Isolation status, xx..1 = off, 0 = on
  - 5D R fader Punch status, xx..1 = off, 0 = on
  - 5E L-R or L patch0 integer, xx = position, range 0-117dB
  - 5F L-R or L patch0 fraction, xx = position, range 0-0.99dB
  - 60 R patch0 integer, xx = position, range 0-117dB
  - 60 R patch0 fraction, xx = position, range 0-0.99dB

Event LED On:

Bn,70,xx

- xx — channel number

Event LED Off:

Bn,71,xx

- xx — channel number

MIDI Local Mode:

Bn,7A,xx

- xx — 0=off, 1=on

VCA's: En,ch,ff,(En),ch,ii

- ii — Absolute position - integer, range 0 - 117dB
- (En) — console channel number + 64, 040H = 1 to 07FH = 64
- ff — Absolute position - fraction, range 0-.99dB
- ch — console channel number 0 = 1 to 03FH = 64

2. SYSTEM EXCLUSIVE MESSAGES

[...] = optional repeat block
All numbers in HEX unless otherwise specified.

TABLE1

Block ID	Console Channels Covered
bb	ss
	bit 7 6 5 4 3 2 1 0
60	-1 3 5 7 9 11 13
61	-2 4 6 8 10 12 14
62	15-27
63	16-28
64	29-41
65	30-42
66	43-55
67	44-56
68	57-69
69	58-70
6A	71-83
6B	72-84
6C	85-97
6D	86-98
6E	99-111
6F	100-112
70	113-125
71	114-126
72	bit0 = 127, bit4 = 128

2.1. V5 System Exclusive Requests

{header} = F0,00,00,1A,50,pp,ss,0n,...

- 0n — MIDI channel
- ss — Software version
- pp — Product code (GS3V)
- 50 — A&H Product type
- 00,00,1A — A&H id
- F0 — {header}

Dump Direct Patch Request:

{header},40,nn,xx,F7

- xx — Attribute bit0 = 1 = mute, bit1 = 1 = vca
- nn — Patch number 0-20 = Patch 0 to 32

NB Patch data returned as Direct Patches
This message is rx only

Dump All Patches Request:

{header},41,xx,F7

- xx — Attribute bit0 = 1 = mute, bit1 = 1 = VCA

This message is rx only

Dump Virtual Patch Request:

{header},42,xx,F7

Attributebit0 = 1 = mute,bit1 = 1 = vca

This message is rx only

Dump FKEYS request:

{header},43,vv,F7

Version

This message is rx only

Dump Solo Safes request:

{header},44,vv,F7

Version,(00)

This message is rx only

Dump Isolation Status Request:

{header},45,vv,F7

Version, (00)

This message is rx only

Dump Group Information Request:

{header},46,vv,F7

Version, (00)

This message is rx only

Dump System Status Request:

{header},47,vv,F7

version, (00)

This message is rx only

Dump Faders Request:

{header},48,vv,F7

version, (00)

This message is rx only

Dump MIX Request:

{header},49,ss,F7

MIX number to dump, always 00

This message is rx only

2.2. System Exclusive Control

MPC control:

{header},4B,id1,id2,...,F7

MPC id code, see table 2

type specifier for MPC id code, see table 2

TABLE 2

	id1	id2
All Mutes Off	76H	02H
Erase working mix	76H	03H
Undo last rec pass	76H	04H
Null Update	76H	05H
Record Key	xx	04H
Play Key	xx	05H
Solo Key	xx	06H
Group Hold	xx	07H
Mute Attribute	xx	08H
VCA Attribute xx	09H	
Isolate Key	xx	0AH
Group Key	xx	0BH
Toggle Group	xx	0CH
Solo Group	xx	0DH
Punch Key	xx	0EH
Function Keys	xx	19H - 1FH (keys 1 - 7)
Displayed Patch	79	pp
Toggle Patch No	7A	pp

where xx = 77H for OFF
xx = 78H for ON
pp = Patch Number

Direct Mute Patch Dump:

{header},50,pp,00,bb,ss,..,bb,ss,F7

Formatted block, see table 1

Patch type = MUTE

Patch number 0-20 = Patch 0 to 32

Direct Patch id

Direct VCA Patch Dump:

{header},50,pp,01,ii1,ff1,...,ii64,ff64,F7

Absolute attenuation factor Integer dB, range 0-117

Absolute fraction dB, range 0 - .99

Patch type = VCA

Patch number 0-1F = Patch 1 to 32

Direct Patch id

Virtual Mute Patch Dump:

{header},51,00,bb,ss,...,bb,ss,F7
- Formatted block, see table 1
- Mute id
- Virtual patch id

Virtual VCA Patch Dump:

{header},51,01,ii1,ff1,...,ii64,ff64,F7
- Absolute attenuation factor integer dB, range 0-117
- Absolute fraction dB, range 0 - .99
- VCA id
- Virtual Patch id

Fader Patch Dump:

{header},51,02,ii1,ff1,...,ii64,ff64,F7
- Absolute attenuation factor integer dB, range 0-117
- Absolute fraction dB, range 0 - .99
- Fader id
- Virtual Patch id

Mute Isolation Status:

{header},52,00,bb,ss,...,bb,ss,F7
- Formatted block, see table 1
  NBbit set = *NOT* isolated, =0 = isolated
- Mute id
- Mute isolation status id

VCA Isolation Status:

{header},52,01,bb,ss,...,bb,ss,F7
- Formatted block, see table 1
  NBbit set = *NOT* isolated, =0 = isolated
- VCA id
- VCA isolation status id

Mute Group Masters:

{header},53,00,bb,ss,...,bb,ss,F7
- Formatted block, see table 1
  NBbit set = *NOT* master, =0 = master
- Mute group master id
- Group id

Mute Group Type Status:

{header},53,01,bb,ss,...,bb,ss,F7
- Formatted block, see table 1
  NBbit set = *NOT* gang master, =0 = gang master
- Mute group type id
- Group id

Mute Group/Toggle Slave Table:

{header},53,02,ch1s,ch1m,ch2s,ch2m,...,ch128s,ch128m,F7
- master entry, chans 1-128
  =0 = is a slave, = 1 = not a slave
  if = 1 then master = 0
- Mute group type id
- Group id

VCA Group Masters:

{header},53,03,bb,ss,...,bb,ss,F7
- Formatted block, see table 1
  NBbit set = *NOT* master, =0 = master
  128 channels are output, only the first 64 are valid.
- VCA group master id
- Group id

VCA Group Slave Table:

{header},53,04,ch1s,ch1m,ch2s,ch2m,...,ch64s,ch64m,F7
- master entry, chans 1-64
  =0 = is a slave, = 1 = not a slave
  if = 1 then master = 0
- VCA slave table id
- Group id

Solo Group Table:

{header},53,05,bb,ss,...,bb,ss,F7
- Formatted block, see table 1
  NBbit = 1 = *NOT* solo grouped, =0 = solo grouped
- Solo Group id
- Group id

Current Mute Master:

{header},53,06,cc,xx,F7
- 0=ON,1=OFF
- Channel number
- Current mute master id
- Group id

Current VCA Master:

{header},53,07,cc,xx,F7
- 0=ON,1=OFF
- Channel number
- Current VCA master id
- Group id

Solo Safe Table:

{header},54,00,bb,ss,.....,bb,ss,F7
- Formatted block, see table 1
  NBbit = 1 = *NOT* enabled, =0 = enabled
- Solo safe table id

Mute Punch/Overwrite Status:

{header},55,00,bb,ss,...,bb,ss,F7

- bb,ss,...,bb,ss — Formatted block, see table 1; NBbit = 1 = "NOT" enabled, = 0 = enabled
- 00 — Mute id
- 55 — Punch/Overwrite id

VCA Punch/Overwrite Status:

{header},55,01,bb,ss,...,bb,ss,F7

- bb,ss,...,bb,ss — Formatted block, see table 1; NBbit = 1 = "NOT" enabled, = 0 = enabled; 128 channels are output, only the first 64 are valid.
- 01 — VCA id
- 55 — Punch/Overwrite id

VCA Punch Data:

{header},56,[pp,ch,ff,ii],[..],[..],F7

- ii — integer attenuation factor in dB's, range 0-117
- ff — fraction dB, range 0 - .99
- ch — VCA channel number 0-3F
- pp — Punch type: 0 = absolute format
- 56 — Table block id

VCA Mode: {header},57,mm,xx,F7

- xx — 01 = ON, 00 = OFF
- mm — Goto: 1 = relative; 2 = null; 3 = return all vcas to fader positions; 4 = ...
- 57 — VCA mode id

V5 Console Modes:

{header},59,vv,F7

- vv — Number to enable. NB There is no restriction on the number of modes sent, ie 1 or 10
- 59 — Console mode set id

Function key dump:

{header},5A,[kk,tt,cm,cl,{data.....},F7

- {data.....} — Type specific data (7-bitised in the following way):- [0AAAAAAA, 0BBBBBBB, 0CCCCCCC, 0DDDDDDD, 0EEEEEEE, 0FFFFFFF, 0GGGGGGG, 0ABCDEFG, 0AAAAAAA, 000000A]
- cl — Count LSB
- cm — Count MSB (NB This is a count of 8-bit data)
- tt — TYPE: 2 = MIDI message press; 3 = MIDI message release; 4 = Patch number press; 5 = Patch number release; 6 = Preset press; 7 = Preset release
- kk — Function key number, 0-6 = key 1-7
- 5A — Function key table id

Close of VCA Event Message:

{header},5B,ch,F7

- ch — Channel number

Establish New MIDI Chanel Number:

{header},5C,0n,F7

- 0n — MIDI channel number (takes effect imediately)

SMPTE Generator Message:

{header},5D,hh,mm,ss,ff,nn,F7

- nn — 0 - stop generating, 1 - start generating
- ff — start time frames
- ss — start time seconds
- mm — start time minutes
- hh — start time hours (with frame rate encoded as per MTC)

Patch Attributes Change Message:

{header},5E,[pp,xx],[...],F7

- xx — New patch attributes (bit0 = mute, bit1 = vca [1 = ON, 0 = OFF])
- pp — Patch number in hex

Function Key Active Message:

{header},5F,kk,tt,F7

- tt — Type (see Function Key Dump)
- kk — Function key number (0-6 = key 1-7)

Event Erase Message:

{header},60,tt,ch,F7

- ch — Channel/mute/patch number
- tt — Type of erase (0 = mute, 1 = VCA, 2 = patch)

Solo Group Event Message (only used in Mix Dump):

{header},61,ct,fl,co,F7

- co — Channel number of channel mute turning on
- fl — Flag (1 = channel mute on, 0 = no channel mute on)
- ct — Channel mute to toggle

Enquiry message:

F0,7E,cc,06,01,F7

MIDI channel number

NB If the channel number is 7F the console will still respond.
rx only

Answer enquiry:

F0,7E,cc,06,02,00,00,1A,50,pp,ss,0n,sv,F7

- SMPTE Option version number
- Current MIDI channel number
- Software version number (as SysEx header)
- Product code (GS3V) (as SysEx header)
- A&H Product type
- MIDI channel number

Mix dump:

Standard MIDI FILE DUMP - of a Format 0 MIDI file.

3. SYSTEM COMMON MESSAGES

All numbers in HEX unless otherwise specified.

MIDI Time Code:

F1,dd

dd is nybblized to 0xxxyyyy
yyyy = 4 bits of binary data
xxx = Message type
0 = Frame count LS nybble
1 = Frame count MS nybble
2 = Seconds count LS nybble
3 = Seconds count MS nybble
4 = Minutes count LS nybble
5 = Minutes count MS nybble
6 = Hours count LS nybble
7 = Hours count MS nybble & SMPTE type

Song Position Pointer:

F2,zz,mm

- song position msb
- song position lsb

NB A song position of 0 is considered a START command.
This message is rx only

End of System Exclusive:

F7

NB Termed EOX

4. SYSTEM REAL TIME MESSAGES

All numbers in HEX unless otherwise specified.

Timing Clock: F8

NB rx only

Start: FA

NB rx only

Continue: FB

NB rx only

Stop: FC

NB rx only

Timing Clock: F8

NB rx only

PLEASE READ THIS PAGE

INTRODUCTION

Congratulations on purchasing the Allen & Heath SMPTE Option. This extremely compact SMPTE time code reader & generator is simply the best way of synchronising your GS3V console & multi-track tape recorder. Once synchronised, the GS3V will output MTC (MIDI Time Code) for synchronising other MIDI devices in your system.

The installation and operation of the SMPTE module is described in this manual with easy to follow diagrams and explanatory text. Before installing the module, **please read all instructions carefully.** Make sure you understand all installation procedures before starting. We also recommend that you first become familiar with the function of SMPTE time code by reading this manual and any other manuals relevant to your set-up. Please place this manual in your GS3V manual ring binder for future reference.

The SMPTE Option will only work with V5.03 Automation Software or later. This SMPTE Pack therefore contains a replacement EPROM and an V_EDIT automation software disk for the Atari ST computer. If the software version numbers displayed on the EPROM and V_EDIT disc supplied are a later version than that displayed on your console V-PROM label, you will have replace the EPROM in your console with the one supplied in the pack. A complete procedure on how to do this is printed in this manual.

The installation of the SMPTE module and EPROM can easily be carried out by a non technical person. If for any reason you do not feel confident about undertaking the work, then contact your supplier's technical support line; they will be able to offer you further assistance.

KEY FEATURES

The SMPTE option module has many features. It

- ✓ can read and generate time code direct to and from the console.
- ✓ automatically detects the frame rate used.
- ✓ is factory set to operate with low level (-10dBV) equipment.
- ✓ is link selectable to operate with high level (+4dBu) equipment.
- ✓ has input and output on a single 1/4" stereo jack socket (tip = generate, ring = read).
- ✓ has programmable generator start time and frame rate using V_EDIT.
- ✓ is simple and easy to install.

FRAME RATES:

READ .....24, 25, 30 & Drop Frame

GENERATE.....24, 25, 30 & Drop Frame

SIGNAL LEVELS:

INPUT OPERATING RANGE .....-30dBV to 20dBV

2 FIXED OUTPUT LEVELS .....-16dBV or -2dBu (link selectable)

TAPE SPEED SYNC RANGE..... +/-1 Octave

FACTORY DEFAULT SETTINGS:

FRAME RATE .....25 frames per second.

GENERATOR OUTPUT LEVEL ..-16dBV

GENERATOR START TIME.....00.00.00.00

Before installing the SMPTE module PCB please check the contents of this pack against the list below:

1x	SMPTE module PCB.	(A&H No: ZX000-239)
1x	V_EDIT Software disk for the ATARI ST computer.	(A&H No: AP0197)
1x	V5 Automation EPROM IC.	(A&H No: AE0346)
1x	SMPTE User Manual.	(A&H No: AP0141)
1x	"Fitted" printed self adhesive label.	
1x	self adhesive label printed with Software Version.	

The last 2 items are to be stuck onto the V-PROM label.

SETUP INCLUDING MULTITRACK, MIDI SEQUENCER AND V_EDIT.

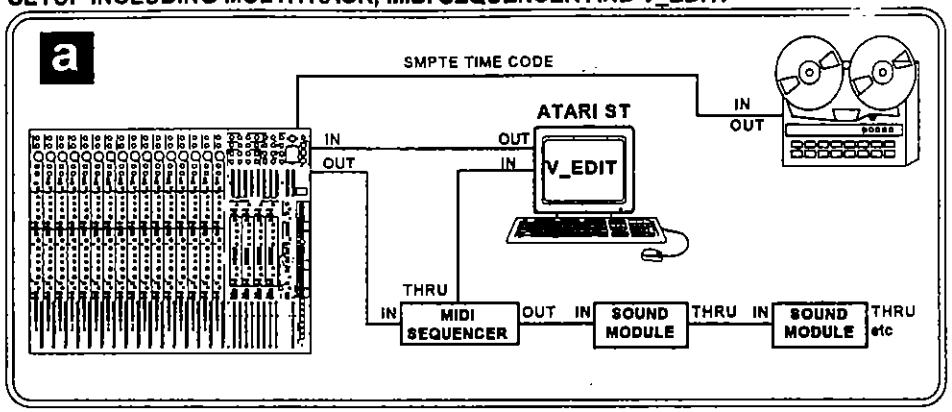

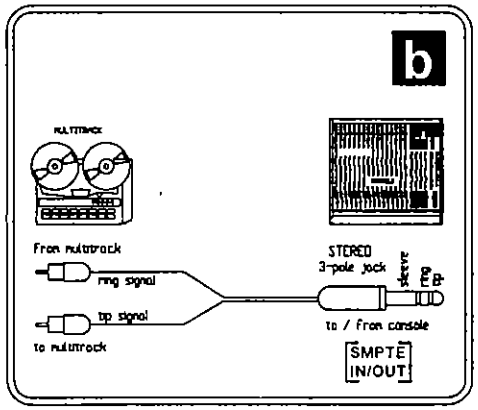

You will need to wire up a lead to connect the tape **IN** and **OUT** of your tape machine to the stereo 1/4" jack **SMPTE IN/OUT** on the console.

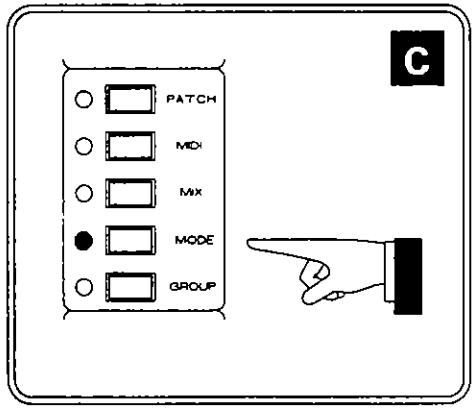

The first thing to do is to record SMPTE time code onto a track of your tape machine. Press the **MODE** switch the LED will light to confirm the selection.

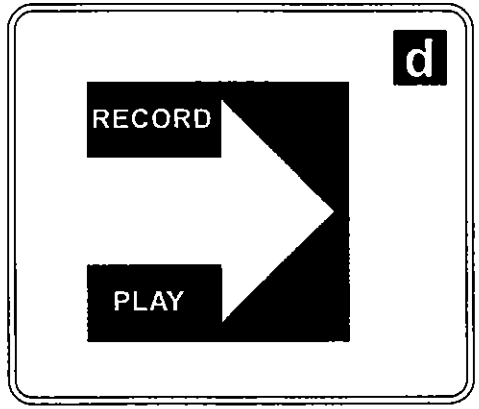

Set your tape machine to record and run the tape. It is usual practice to record time code onto an outside track of your tape machine.

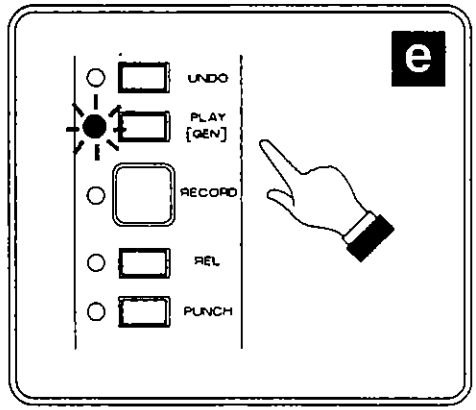

To start the time code generator, press the **PLAY** switch. The LED will flash to confirm the selection. Note: the time code start time can be set from V_EDIT.

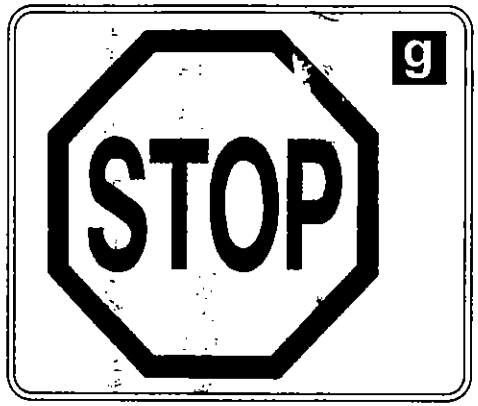

When you have recorded SMPTE time code on the full length of the tape, stop your tape machine.

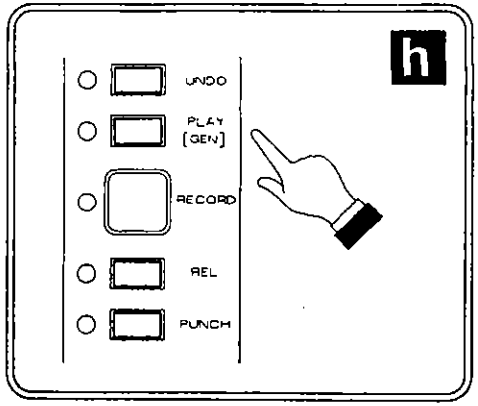

Press the PLAY switch to stop the generator. The LED will extinguish.

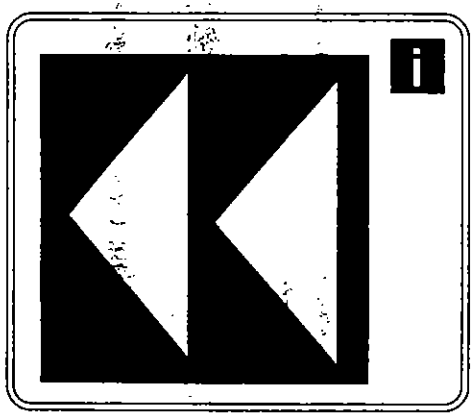

Rewind the tape to a suitable position and press play.

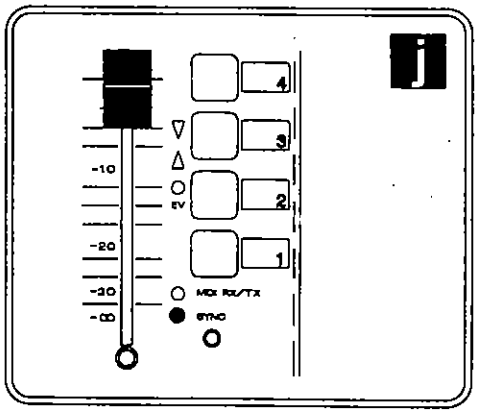

The SYNC LED will light to confirm that the console is synchronised to the time code. Note: the counter on V_EDIT will also display the current time code position.

NOTE

When generating SMPTE time code you can exit **MODE** and carry out other functions e.g. setting up mute/VCA groups etc., whilst still generating time code. You cannot, however, get sync from the SMPTE option when generating. To exit **MODE**, press the **MODE** switch the LED will extinguish. To stop the SMPTE generator simply press the **MODE** switch followed by the **PLAY** switch.

Always "stripe" the tape in one continuous pass.

Always run the time code inputs and outputs directly to and from the console and the tape machine. DO NOT RUN THE TIME CODE THROUGH YOUR CONSOLE OR PATCHBAY.

MODES

CONSOLE MODES

The SMPTE module is factory set to generate time code at **25 FRAMES (MODE 8)** on power up. If you want to generate at a different frame rate it is necessary to set up the console to the particular frame rate you wish to use. This is done by selecting one of the console modes as follows:

24 FRAMES	**MODE 7**	Sets the SMPTE generator rate to 24 frames per second.
25 FRAMES	**MODE 8**	Sets the SMPTE generator rate to 25 frames per second.
DROP FRAME	**MODE 9**	Sets the SMPTE generator to Drop frame mode.
30 FRAMES	**MODE 10**	Sets the SMPTE generator rate to 30 frames per second.

There are several other modes; MODE 0 to MODE 6 and MODE 11 to MODE 14. These are refered to in the Modes section of the GS3V Automation Systems manual (A&H No: AP0140).

To change mode, follow the steps shown below.

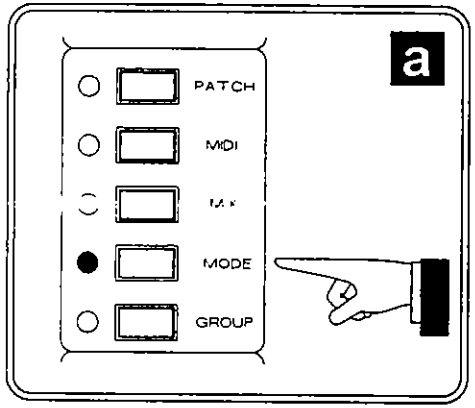

To select console **MODE**, press the **MODE** switch; the **LED** will light to confirm the selection has been made.

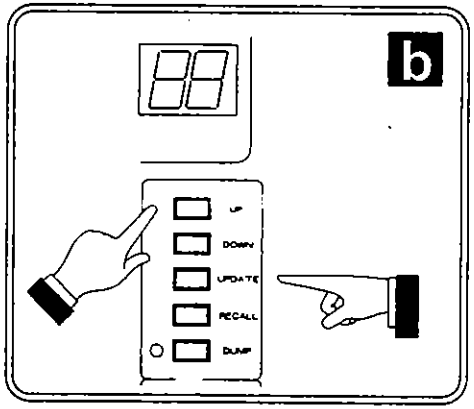

Use the **UP** and **DOWN** keys to select required mode number 7 to 10. When required mode number is displayed, press **UPDATE** to set. Note, non selected **CONSOLE MODE NUMBERS** will **FLASH.**

Once the frame rate has been set, the console will power up with this frame rate until it is changed.

To return to the factory default setting, hold down the ERASE switch on power up. WARNING! This will reset <u>all</u> the console settings to the factory default.

FRAME RATE AUTODETECTION

The procedure above only sets the Frame Rate for the time code generator. The time code reader automatically detects the Frame Rate being used when the tape is first run after the console is powered on.

If you are using different Frame Rates in a session, you will need to invoke the frame rate autodetection function for the new Frame Rate. This can be done in a number of ways:

1) Erasing the mix in the console's memory by pressing the MIX switch followed by the ERASE switch twice. (i.e. MIX ERASE ERASE)
2) Running the console's time code generator for a few seconds.
3) Temporarily removing the power from the console for a few seconds.

INTRODUCTION

This is the AUTOMATION OWNER MANUAL for the GS3 audio mixing console upgraded with Allen & Heath's V5 VCA Automation System. The operation of the mute and VCA fader automation is described with easy to follow diagrams and explanatory text.

Before using your automation please read the **Getting Started** section. This will introduce you to the system and take you through a step-by-step procedure of creating an automated mix. The rest of the manual can be used as a reference which you can use to get more in-depth descriptions of the automation functions. We also recommend that you first become familiar with the layout and function of your console by reading your GS3 AUDIO SYSTEMS OWNER MANUAL.

Your GS3 Upgrade is accompanied by the Allen & Heath V_EDIT automation control/display software disk for the Atari ST computer. All automation functions are performed using V-EDIT.

© copyright Allen & Heath Ltd.
GS3 V5 Upgrade Automation Manual
Publication AP0188 issue 1 October 1993
All trademarks are acknowledged

GETTING STARTED

INTRODUCTION

Your GS3 Upgrade has taken your standard GS3 console fitted with V4 Mute Automation & provided it with Allen & Heath's powerful V5 Automation for faders & mutes. The new automation features are:

- VCA fader automation on all channel faders and the LR master fader
- In-built SMPTE Reader/Generator for direct synchronisation to multi-track recorders
- MMC (MIDI Machine Control) Function Keys for transport control of MMC compatible tape machines
- Comprehensive VCA grouping including multiple nested masters
- Three different types of mute grouping
- 33 patches for faders & VCA levels
- Mute & VCA isolation facilities
- Solo-in-place with programmable solo safes.
- Comprehensive mix editing facilities.
- Direct mix archiving to floppy disk using V-EDIT
- Graphical display of console automation status & configuration with V-EDIT

AUTOMATION SPECIFICATION

- Up to 32 automated VCA channels (plus LR master fader)
- VCAs recorded to frame accuracy, mutes recorded to bit accuracy (1/80th frame)
- VCA hardware resolution 4096 steps; 11700 step software (MIDI) resolution in Enhanced Mode. 127 VCA steps in Basic Mode
- Internal memory for a 10 to 20 minute active mix

BASIC ASSUMPTIONS

Before continuing with this section please check that:

- The console hardware upgrade has been performed & the console is fully tested & functional, as specified in the GS3 V5 Upgrade Installation Manual.
- You are familiar with the use of an Atari ST computer.

HOW THE SYSTEM WORKS

V-EDIT's purpose is to display the actual VCA levels and mute states when replaying an automated mix. It allows you to edit and archive the mix, as well as configure the console settings. The GS3 contains a micro-computer which reads and controls the faders/VCAs and mutes. It transmits the console status, via MIDI, to V-EDIT where it is displayed. All automation settings and mix information is stored in the console. When saving a mix, for example, the mix data is transmitted from the console to V-EDIT where it can be saved to floppy disk.

VCAs EXPLAINED

In the standard GS3 the audio passes through the faders whose position controls the audio level. In the GS3 V5 Upgrade the audio now passes through VCAs (Voltage Controlled Amplifiers). When you record your fader moves, the console's computer reads the positions of the faders and stores them internally. When you play back the mix, the computer sends the stored fader positions to the VCAs which then control the actual audio level.

RUNNING V-EDIT

First connect the GS3 MIDI out to the Atari MIDI in, and the Atari MIDI out to the GS3 MIDI in. Power up the console and turn on the Atari computer. Place the V-EDIT disk provided with this manual into the disk drive and double click on the A drive icon. The following window will appear:

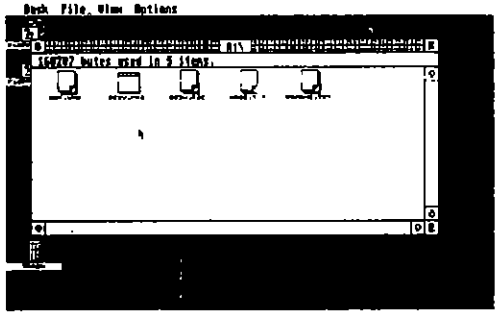

First read the files README.TXT and MROS.TXT for additional important information about using V-EDIT. To do this double click on the icons & select SHOW from the subsequent menu.

To run V-EDIT double click on the GS3V.PRG icon. The following window will appear:

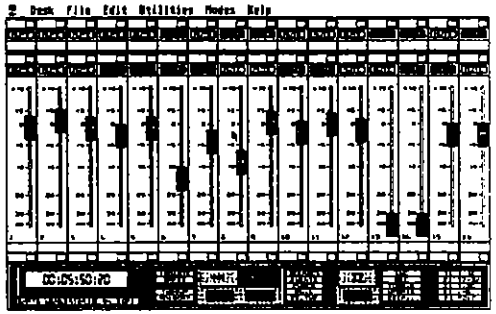

If V-EDIT is connected to the GS3 the faders and mutes on the screen will reflect the settings on the console. If V-EDIT and the GS3 are not connected at this stage then connect them up, and select **Connect GS3V** from the **Utilities** menu. This will request the GS3 to dump all of it's settings to V-EDIT. Press mutes & move faders on the console and you will see the corresponding changes on the V-EDIT screen.

The screen is split into 3 sections: the menu bar at the top, the main screen in the middle & the control panel at the bottom. Whereas the menu bar and control panel remain fixed, there are 4 different main screens. To access the different screens press keys 1 to 4 on the main keyboard (not the numeric keyboard), select a screen from the control panel as shown:

Screen 1 - Channels 1 to 16
Screen 2 - Channels 17 to 32
Screen 3 - Channels 1 to 32
Screen 4 - LR fader, Aux Send & Stereo Return Mutes

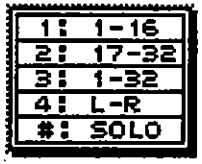

CHANNEL STRIP LAYOUT

The layout of the channel strip is shown below:

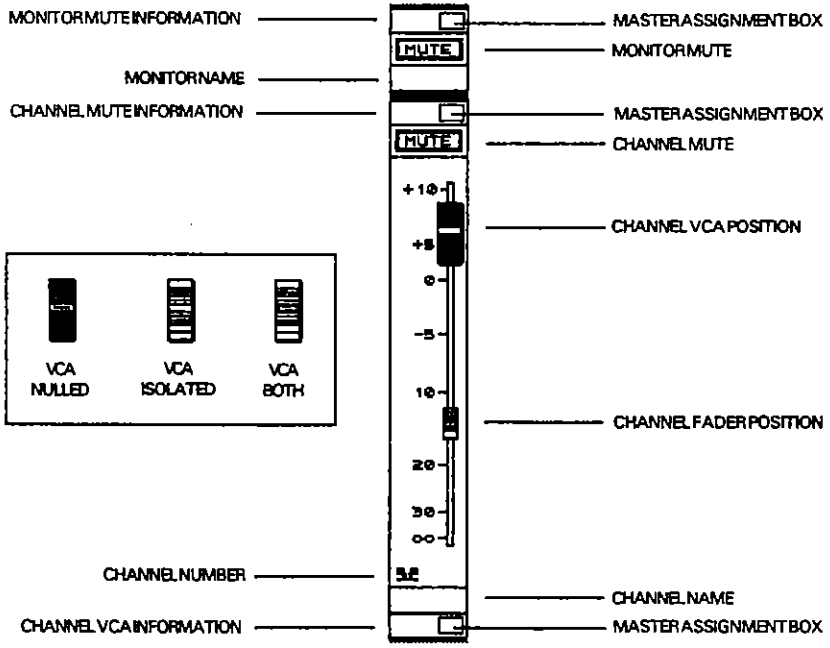

TUTORIAL - RECORDING YOU FIRST MIX

This section will give you a quick guided tour of the automation system by performing an automated mix. The steps you will carry out are:

- Connect up the basic system
- Record a basic mix
- Isolate some mutes & VCAs
- Programme some solo safes
- Give the channels names
- Programme some VCA & mute groups
- Edit the mix using erase
- Edit the mix in Trim Mode
- Save the mix
- Load a mix

Following these steps will equip you with the knowledge required to confidently drive the automation system. More in-depth descriptions of the above techniques, and other features, are included throughout the rest of this manual.

1. Connect Up The Basic System

First connect the GS3 to the Atari using MIDI.

- Connect the MIDI out of the GS3 to the MIDI in of the Atari, and the MIDI out of the Atari to the MIDI in of the GS3. Although your final system setup may be different, this simpler setup will prevent any possible system irregularities.

- Turn on the GS3 and the Atari. Run V-EDIT on the Atari as described in the previous section. Then select **Connect GS3V** from the **Utilities** menu on the Atari. The faders & mutes on the screen will now be the same as on the console.

2. Record Your First Mix

- We will record some fader moves on channels 15 & 16. Select **RECORD** from the control panel or press **R** on the keyboard to put the system into record ready. Note that the **PLAY** button automatically activates.

- Press ENTER on the numeric keypad of the Atari. Note that the time-code display starts counting.

- Move the faders on channels 15 & 16. You can also turn some mutes on and off. Press **0** on the numeric keypad to stop the recording. Note that the console automatically drops out of record.

- Press the **0** again to reset the time to the beginning. Press ENTER again and watch your mix being played back.

That's it! Recording your mix is as simple as that. Pressing ENTER on the numeric keypad causes V-EDIT to output MIDI Time Code (MTC). Note that the console automatically detected this and synchronised to it. The following sections will now concentrate on the other features of the automation for managing and editing your mix.

3. Isolating Faders

Isolation effectively isolates the selected mute or fader from the control of the automation, giving you manual control over it. This is useful, for example, when you are in the process of mixing but want to regain manual control over a channel to record to multi-track.

- Select **ISOLATE** from the control panel, or press I on the keyboard. Click in the status boxes of VCA channels 7,8 & 9 to isolate them as shown. Note that the VCA icons change to show isolation status. You can isolate some mutes in a similar fashion.

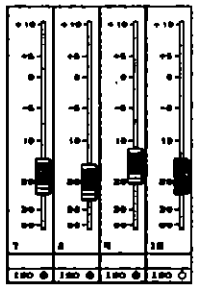

- Now when you play back the mix again the movements you recorded on VCA channels 7, 8 & 9 will not be played. Similarly if you were in record mode, any movements you made on these channels would not be recorded.

An alternative way to isolate faders & mutes is to select **Isolate** from the **Edit** menu. This will allow you to isolate all VCAs or all mutes with one mouse click.

4. Programming Solo Safes

Your GS3 now has a powerful Solo-in-Place facility. A Solo function will mute every channel on the console except for specific channels. This allows you to listen to channels in isolation without affecting the level or stereo image of the signal. Solo safes allow you to select channels that will not be muted during solo (e.g. your effects returns).

Solo-in-place is different from PFL (pre-Fade Listen) in the following respects. PFL allows you to listen to the channel signal in mono for level matching and is non-destructive to the LR mix. Solo-in-place allows you to listen to a channel signal post fader to match the level in the mix and is destructive to the LR mix. Generally use PFL when recording to multi-track; use solo-in-place when performing a mix-down.

- Press # on the keyboard or select **SOLO** from the control panel. All the mutes are now activated except for the effects sends and stereo return mutes (These are automatically set to 'Solo Safe'). Press a mute on the channel you want to listen to. This channel is now effectively soloed. If you exit Solo mode (press # again) the channel you selected as solo will be remembered and called up the next time you select Solo.

Putting a channel into Solo-Safe means that it will not be muted when you enter Solo mode. The effects sends and stereo returns are made Solo-Safe by default (you can change this if you want).

- To programme Solo Safes select **SAFES** from the control panel or press A on the keyboard. Click on the status boxes of the channels you want to make Solo Safe, as shown:

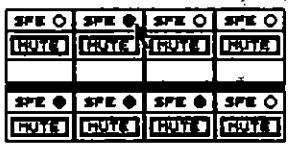

An alternative way to make channels Solo Safe is to select **Safes** from the **Edit** menu. This will allow you to select all channels or monitors to be Solo Safe with one mouse click.

5. Naming Channels

V-EDIT gives you the ability to name the channels and monitors for quick & easy identification.

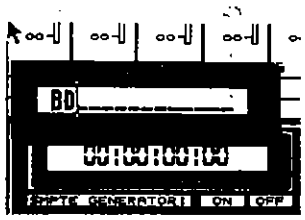

- To name a channel click in the channel's Name box. Then type the channel name into the dialog box and press RETURN.

- Name the rest of the channels as follows ready for the next part of the tutorial on Groups:

1.	BD	(BassDrum)	5.	TT2	(TomTom 2)	9.	OHR	(Right Overhead)
2.	SN	(Snare)	6.	TT3	(TomTom 3)	10.	BASS	
3.	HH	(High Hat)	7.	TT4	(TomTom 4)	11.	GTRL	
4.	TT1	(TomTom 1)	8.	OHL	(Left Overhead)	12.	GTRR	

6. Setting Up Groups

The V5 Automation System has a powerful grouping facility typically only found on very high-end automated consoles. Grouping effectively allows you to control many VCAs or mutes from a single fader or mute. With V5 Automation you can also have groups within groups within groups etc..

To set up a group you need to select a group master (which will control the group) and then the group slaves (which will be controled by the master, and which can also be masters of other groups). First we will set up some VCA groups using the channels we named above.

- First set all the faders to roughly the 0dB position.

- Select **GROUP** from the control panel or press G on the keyboard.

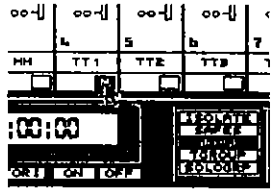

- We will first set up a group on the tom-toms with TT1 being the group master. Click in the status box for channel 4. An 'M' will appear in the box showing that it is a group master, as shown:

- Next assign TT2, TT3, & TT4 as group slaves by clicking in their status boxes. The slaves will then show a '4' in their status boxes showing that they are slaves of channel 4's VCA, as shown:

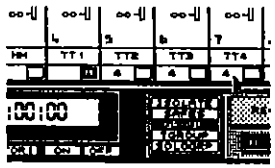

- Now move the fader on channel 4 on the console. If you move the master fader up 5dB it's slaves will also move up by 5dB in relation to their current positions.

- Next assign OHL as a master of OHR in a similar fashion.

- Next assign the bass drum BD as a master of the snare (SN), high-hat (HH), tom-toms (TT1), and overheads (OHL). The bass drum is now the master of the whole drum kit (Hint: if you hold down Shift & Alt on the keyboard you can temporarily disconnect the master from the group in order to change it's level).

- Next assign GTRL as a master of GTRR, and assign the BASS as a master over GTRL and the bass drum (BD). You now have control over the entire backline using just one fader!.

You can also set up standard mute groups in a similar fashion. The next section shows you how to set up two different and extremely useful types of mute groups.

7. Setting Up Toggle Mute Groups

With standard mute groups the slaves always follow the state of the master, i.e. master mute on - all slaves on. A toggle group can be used whenever you need flip one set of mutes on, and another set of mutes off. To set set up mute toggle groups follow this procedure:

- Select **TGROUP** form the control panel or press **H** on the keyboard.



- Click on the status box of channel mute 1. A 'T' will appear in the box showing that it is a Toggle Group master.

- Next click on the status boxes of mute channels 2, 3 and 4. A 'C1' will appear in the status box of each mute channel, showing that they are slaves to mute channel 1.



- Now turn on channel mutes 2 and 4. Then press channel mute 1. Note that pressing the master toggles the states of the mutes in the group.

A possible application for Toggle Groups is as follows. Lets say we are using a synthesiser voice for the verses but are using a totally different voice for the choruses. We can feed the synthesiser into two seperate channels, with seperate EQ & aux send settings appropriate for the two voices. If we assign a **Toggle Group** to these two channels we can simply swap between the two channels, and the different voices, at the touch of a single button for the verse &choruses.

8. Setting Up A Solo Group

A solo group effectively gives you a 'local solo-in-place' anywhere on the console. To set set up a solo group follow this procedure:

- Select **SOLOGRP** form the control panel or press **J** on the keyboard.



- Click on the status boxes of mute channels 1, 2, 3 and 4. The status boxes of each channel will show that it is part of the Solo Group.

A solo group can be useful when you have, say, 4 versions of a guitar break on your multi-track from which you need to make a composite track. Using a solo group will allow you to save various mix options for reference and playback before choosing the final version and erasing the source material.

8. Erasing Events From The Mix

We will now go through the process of erasing a fader move that we made earlier on channel 15.

- Press **ENTER** on the numeric keypad to play back the mix.

- Select ***ERASE*** from the control panel or press **[DEL]** on the keyboard.

- When a move on channel 15 has passed click on the channel fader area. This has marked the current or previous event on the channel for deletion. Hit **CLR/HOME** on the keyboard to delete the event. Select ***ERASE*** again (or **[DEL]**) to exit erase mode.

- When you playback the mix again, the fader move on channel 15 is no longer there.

V5 Automation allows you to delete individual VCA, mute or Patch Recall events, or you can delete all the events associated with a channel. Now delete the fader moves on channel 16 ready for the next section of the tutorial.

9. Editing The Mix In Trim Mode

For the last part of the tutorial we will go through the process of editing a fader move in trim mode. In trim mode fader movements are recorded as additions to the current moves. This lets you make small adjustments to fader moves or to add an offset to all the moves for a particular channel.

To demonstrate Trim Mode, record the following fader moves on channels 15 & 16. Starting at the bottom of the travel, move the fader up to the 0dB position, then down to the -5dB position, then down to the -10dB position. First we'll record a trim on channel 15's fader.

- To put the console into Trim Mode select **RELTVE** from the control panel, or press **V** on the keyboard.

- Next select **NULL** from the control panel, or press **N** on the keyboard, to enter free-null mode. Move the fader up to the 0dB position. Press **N** again to exit free-null mode.

- Press **R** to enter record mode and press **ENTER** on the numeric keyboard to start playing the mix.

- When the VCA starts moving up to the 0dB position, move the fader up to the + 5dB point. When the VCA starts moving down to the -5dB position return the fader back to the 0dB position.

- Press **0** on the numeric keypad to stop recording.

When you play back the mix you will see that the VCA now moves up to the + 5dB point. You have added a 5dB offset to the VCA movement.

Next we'll record a trim on channel 16's fader.

- To put the console into Trim Mode select **RELTVE** from the control panel, or press **V** on the keyboard.
- Next select **NULL** from the control panel, or press **N** on the keyboard, to enter free-null mode. Move the fader up to the 0dB position. Press **N** again to exit free-null mode.
- Press **R** to enter record mode and press **ENTER** on the numeric keyboard to start playing the mix.
- When the VCA starts moving up to the 0dB position, move the fader up to the + 5dB point and leave it there.
- Press **0** on the numeric keypad to stop recording.

When you play back the mix you will see that the VCA now has a 5dB offset added to the move you made. If there were any VCA moves further on in the mix, these too would have the 5dB offset added. If you record any new fader moves to the mix (not in trim mode) these moves would not have 5dB added to them.

10. Saving & Loading a Mix

To save your mix, select **Save** from the **File** menu, or press **CTRL-S** on the keyboard. You will then be presented with a selector box, as shown:



This gives you the option to save the various system configurations such as groups, patches, & solo safes. If you select MIX, all of the console settings will be saved.

To save the mix, select **MIX** from the option box, or press **1** on the keyboard. You will then be prompted to enter a filename to save your mix under.

To load in a previously saved mix, select **Open** from the **File** menu, or press **CTRL-O** on the keyboard. You will then be presented with a selector box asking you which type of file to load. As with SAVE you can load in an entire mix (with all the associated console settings) or you can load in individual console settings such as patches or groups.

SYSTEM SETUP

Shown below are two typical MIDI system setups upon which you can base your own MIDI setup. It is most important to bear in mind, when setting up your system, that the GS3 & V-EDIT must have 2 way MIDI communication (i.e. GS3 MIDI out to V-EDIT MIDI in, and V-EDIT MIDI out to GS3 MIDI in). All connections shown in the examples are MIDI except where otherwise stated.

1. GS3 & V-EDIT with Multi-Track Tape Machine

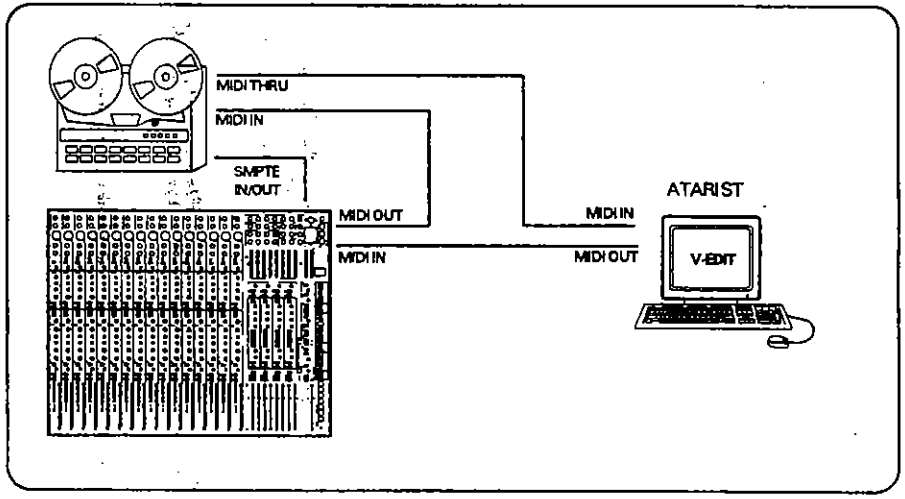

This is the optimum setup consisting of the GS3, V-EDIT and a multi-track tape machine. By 'striping' a track of the tape machine with time code from the GS3's SMPTE module, the automated mix on the console can be synchronised to the music on the tape. This is the only way to synchronise the automation in this setup.

If your tape-machine is MMC (MIDI Machine Control) compatible, using the above configuration allows you to control the tape transport from the console's Function Keys. Otherwise connect the MIDI out from the GS3 directly to the MIDI in of the Atari ST.

2. GS3, V-EDIT and Multi-Track with ATARI based Sequencer

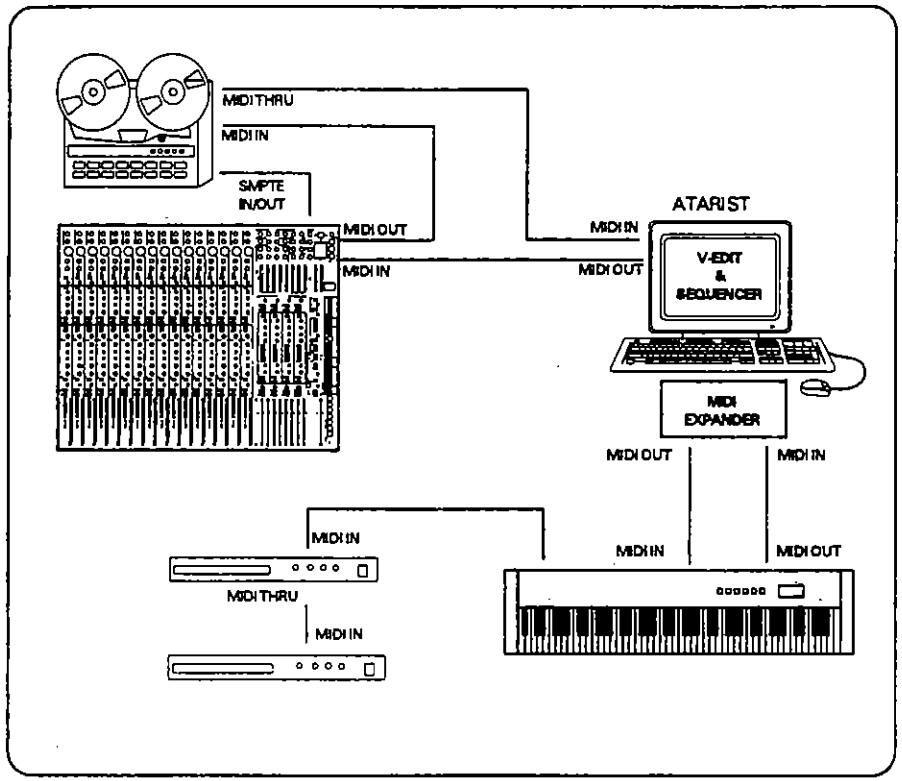

This setup shows the GS3 and V-EDIT in a typical MIDI setup with a sequencer, MIDI keyboard & expanders. The sequencer can run alongside V-EDIT on the Atari using either M-ROS or Softlink. It is recomended that you use seperate MIDI ports for your console & synthesizer MIDI data by using a MIDI port-expander device.

In this configuration the console gets it's sync from the tape-machine via the SMPTE module. The console will then output MTC to the Atari where it can be used to synchronise the sequencer (the console must have Mode 12 MTC Output enabled. See the section on Modes).

If your MIDI port-expander device includes a SMPTE reader, you can also connect the SMPTE output from the tape-machine to it.

INTRODUCTION

Function keys are essentially programmable MIDI switches which can be set up as desired. Applications for Function Keys are as follows:

- If your tape machine can transmit and receive MIDI, you can use your function keys as a second set of transport controls located to hand on the console.
- You can use your function keys to control any other MIDI compatible outboard equipment (e.g. sequencers, synthesisers, effects processors, etc.)
- You can use your function keys to recall specific mute or VCA patches on the console.
- You can use your function keys to toggle a specific set of mutes (mute presets).

Note that your old footswitch socket is no longer tied to Function Key 7.

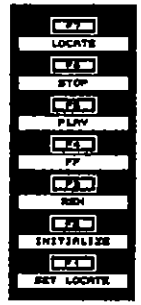

Seven Function Keys are provided on your GS3 console and also in V-EDIT. To view your function keys in V-Edit go to the Master Page (page 4) by pressing key 4 on the keyboard. The function keys appear as shown:

To activate the Function Key simply click on the button icon. This is identical to pressing the Function key on the console. To programme the a Function Key click on the Name Box below the Function Key button icon. The dialog box shown below will appear.

The seven Function Keys are duplicated on the Atari keyboard as function keys F1 - F7.

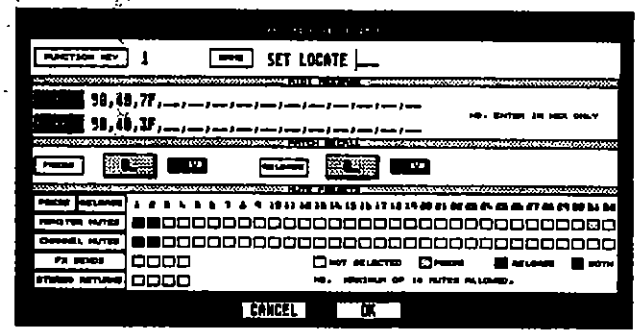

FUNCTION KEYS AS TAPE MACHINE TRANSPORT CONTROLS

The Function Keys are factory programmed for transport control of MIDI Machine Control compatible tape machines. The most commonly used tape transport commands have been selected and programmed on the function Keys. If you have an MMC based tape machine (e.g. Fostex R8) you may decide to mark the the function key write-on strip with the corresponding tape transport commands shown above.

The function keys provide for key press and release MIDI messages. The above factory defaults only use the key press MIDI message. It is possible to cascade two MMC commands for press and release on one key, e.g for Rewind and Stop.

NAMING A FUNCTION KEY



To change the name of a Function Key, click in the NAME field of the Function Key Editor box as shown above. Type in the new name and click on the OK box.

PROGRAMMING A MIDI MESSAGE INTO A FUNCTION KEY

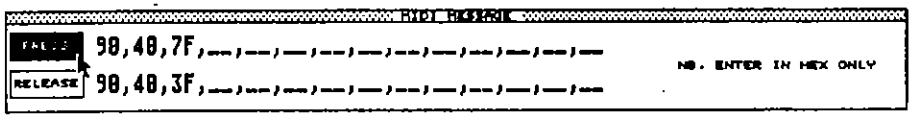

A MIDI message up to 14 bytes long can be assigned to both the press & release action of a Function Key. To programme a MIDI message into a Function Key, first click on the PRESS box to activate a MIDI MESSAGE PRESS. Then type in the MIDI message in hexadecimal format. Follow the same procedure for the RELEASE action.

The MIDI message can be MMC type messages for controlling MIDI based tape machines, or Note/ Program Change messages for controlling samplers, effects processors or sequencers.

PROGRAMMING A PATCH RECALL INTO A FUNCTION KEY



A Patch recall can be assigned to a Function Key for either press or release. To programme a Patch recall first click on the PRESS box, then click in the PATCH NUMBER box and type in the required Patch Number. Then click on the attribute box to select the desired Patch attribute. Programme the RELEASE patch recall in a similar fashion.

PROGRAMMING MUTE PRESETS INTO A FUNCTION KEY

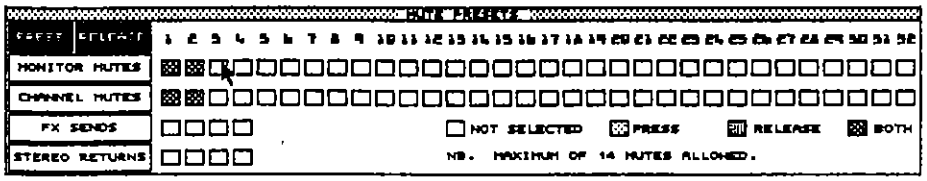

A mute preset is different from a Patch in that it toggles the state of the mutes in the preset, whereas a Patch affects every mute on the console. Mute presets can be set up for PRESS and RELEASE of the Function Key. To programme a PRESS Mute preset first click the PRESS box. Then click on the mute boxes to select the mutes required. Follow the same procedure for RELEASE.

INTRODUCTION

Console modes are used to configure the automation to suit your particular setup and are accessed through the MODES menu in the menu bar. There are two MODES menus- **MIDI Modes** which affect the way the automation uses MIDI - and **Console Modes** which affect certain console settings.

MIDI MODES

To access the MIDI Modes menu, select **GS3V MIDI** from the **Modes** menu, or press **CTRL- M** on the keyboard. The following window will appear. Simply click on the boxes to select the desired Mode.

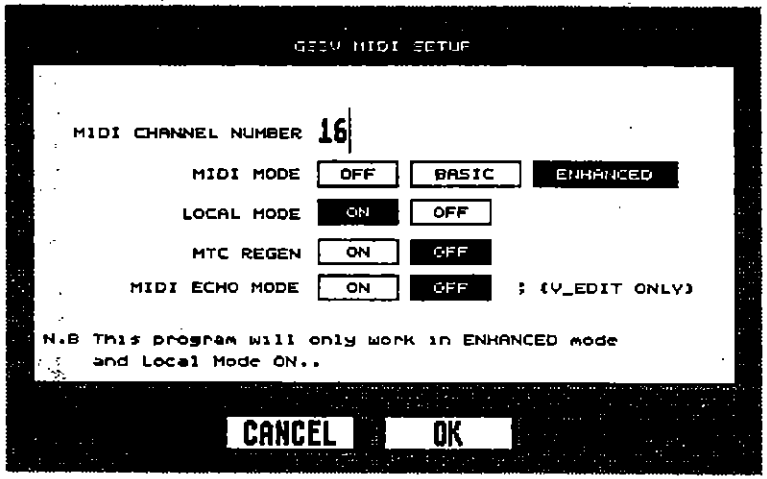

MIDI CHANNEL

The default MIDI channel is **16**. To change the MIDI channel type in the new channel number

MIDI MODE

Enhanced
This is the default MIDI mode and is the usual mode for system operation. This mode enables the console to communicate MIDI automation information at it's full potential, providing the maximum 11,700 step VCA resolution, and can utilise the full range of facilities on V-EDIT.

Basic
In Basic mode the console transmits standard MIDI information that is not specific to the automation system. This mode can be used if the console is being used with MIDI sequencer equipment that does not interface to the console automation.

Off
This mode is provided for use with the GS3V console only. DO NOT USE THIS MODE.

LOCAL MODE ON/OFF

The default mode is Local Mode ON. If Local Mode is off the console automation MIDI information will be transmitted but will not affect the console settings unless they are echoed back via another MIDI device.

MTC REGEN ON/OFF

The default mode is Regen On. With Regen Off, if MTC (Midi Time Code) is received by the console on MIDI IN, or if the console is reading SMPTE time code, it will not be transmitted from MIDI OUT of the console. This mode helps to reduce the amount of MIDI data being transmitted from the console. However, in this mode the Time Code display on V-EDIT will not operate. If you want the time code display to operate, or if another piece of equipment in your setup needs to receive MTC, then turn MTC Regen ON.

MIDI ECHO MODE ON/OFF

The default mode is OFF. When MIDI Echo is On any MIDI data received by V-EDIT at the MIDI IN port will be echoed to the MIDI OUT port, with the exception of MIDI System Real Time Mesages such as MTC, and MIDI Clocks. Note that Echo Mode On canot be used when running under MROS or Softlink.

CONSOLE MODES

To access the Console Modes menu, select **GS3V Console** from the **Modes** menu, or press **CTRL - C** on the keyboard. The following window will appear. Simply click on the boxes to select the desired Mode.

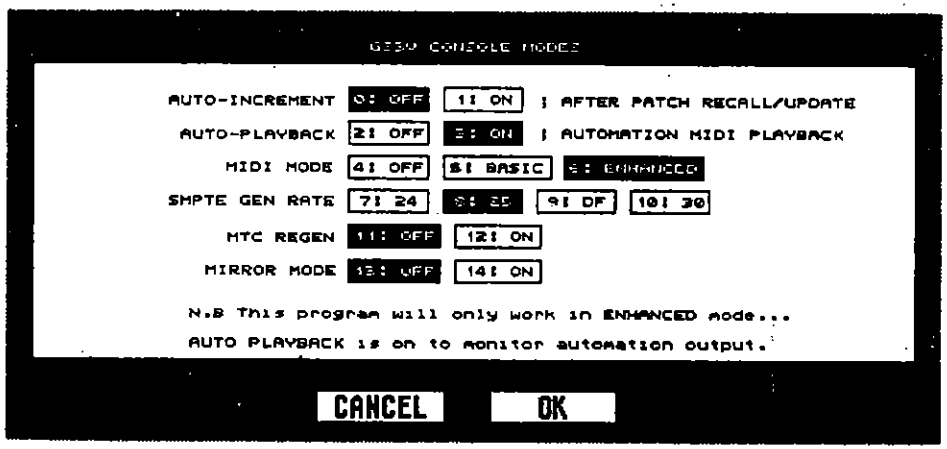

AUTO-INCREMENT ON/OFF

The default mode is OFF. With Auto-increment On, the Patch number will automatically increment to the next Patch number every time a Patch is recalled. This feature is useful for scrolling through Patch scenes in sequence.

AUTO-PLAYBACK ON/OFF

The default mode is ON. When Auto-playback is OFF the console will not output automation MIDI data when playing back a mix. The console itself will perform the mix but it will not be visible on V-EDIT.

MIDI MODE

Refer to MIDI Mode menu on previous page.

SMPTE GEN RATE

Your GS3 V5 Upgrade console has been fitted with a SMPTE Reader/Generator. This option allows you to select the required frame rate for the SMPTE generator used to stripe your tape. The default frame rate is 25 frames per second. Refer to the section on SMPTE for more information.

MTC REGEN ON/OFF

Refer to the MTC Regen menu on the previous page.

MIRROR MODE ON/OFF

The default mode is Mirror Mode ON. With mirror mode ON the console will always 'mirror' the state of V-EDIT when using the programing modes (Group, Toggle Group, Solo Group & Isolate). With Mirror Mode OFF the console does not follow V-EDIT when using these modes. This is to allow programing to be done 'in the background'. For example, you could set up groups on V-EDIT while the console is playing back a mix.

SMPTE MODULE

INTRODUCTION

If you have a multi-track tape machine in your setup, you can synchronise it to the console's automation system using the internal SMPTE reader/generator. Your old footswitch socket above the MIDI sockets on the console is now a SMPTE IN/OUT socket. The SMPTE generator is controlled from V-EDIT. The SMPTE reader requires no configuration & automatically detects the frame rate being used. When synchronised to SMPTE timecode the console will output MIDI Time Code if MTC Regen Mode is turned On (see the section on Modes).

SPECIFICATION

FRAME RATES:

READ ..... 24, 25, 30 & Drop Frame

GENERATE ..... 24, 25, 30 & Drop Frame

SIGNAL LEVELS:

INPUT OPERATING RANGE .. -30dBV to 20dBV

OUTPUT LEVEL ..... -16dBV

TAPE SPEED SYNC RANGE ..... +/-1 Octave

DEFAULT SETTINGS:

FRAME RATE ..... 25 frames per second.

GENERATOR START TIME 00.00.00.00

GETTING STARTED

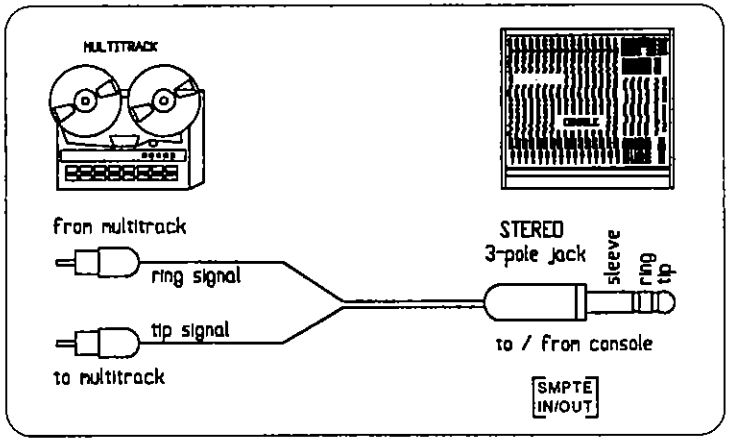

You will need to wire up a lead to connect the tape **IN** and **OUT** of your tape machine to the stereo 1/4" jack **SMPTE IN/OUT** on the console as shown above.

STRIPING THE TAPE

The first thing to do is to 'stripe' your tape. This involves recording SMPTE timecode onto a track (usually an outside track) of your multi-track recorder. Select **SMPTE Option** from the **Utilities** menu in the menu bar, or press **S** on the keyboard. The window shown below will appear:

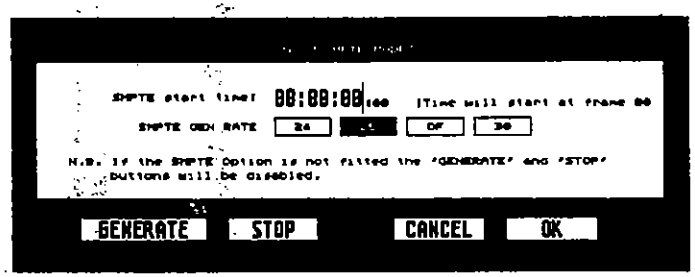

SMPTE Start Time

First set SMPTE start time. Do this by typing in the required start time. Any illegal values (e.g. 99 hours) will be reset to zero after clicking the OK button. The default start time is 00.00.00.00. The frame value always starts from 0 frames. The start time you enter will be remembered by the console until you change it.

SMPTE Frame Rate

Next select the desired frame rate by clicking the mouse in the appropriate box. This can also be accomplished using the Console Modes menu. The default frame rate is 25 frames per second. The frame rate you enter will be remembered by the console until you change it.

Recording Time Code

Set your tape machine to record and run the tape. Start the time code generator by clicking on the GENERATOR button. When you have recorded time code on the whole length of the tape stop your tape machine. Stop the time code generator by clicking on the STOP button.

SYNCHRONISING TO SMPTE

When you play the tape the console will automatically synchronise to it. The SMPTE reader will automatically detect the frame rate being used when the tape is first run after the console is powered on. If you are using different frame rates in a session you will need to invoke the frame rate auto-detection for the new frame rate. This can be done in a number of ways:

1) Erasing the current mix
2) Running the time code generator for a few seconds
3) Temporarily removing the console power for a few seconds.

IMPORTANT NOTES

Synchronisation

If you have recorded a mix using SMPTE time code for synchronisation, you cannot then synchronise the mix using either MTC or MIDI clocks, & vice versa.

Ground Path

The SMPTE module relies on getting it's ground signal from the audio channels. For the SMPTE module to operate you MUST have at least one audio channel connected to your tape machine, apart from the SMPTE lead.

TECHNICAL DESCRIPTION 1

The **GS3** range are flat panel in-line monitor format compact audio recording consoles with a separate **MPS9** power supply unit. The standard **GS3** includes mute switch automation. The **GS3V** includes both VCA fader automation and enhanced mute switch automation. The **GS3** can be upgraded with the **V5 VCA Automation Upgrade kit**. This allows a standard GS3 to be fitted with the GS3V automation. This gives the GS3 all of the automation capabilities of the GS3V except for the following:

- there are no Event or Null LEDs next to the faders.
- the automation is controlled using the V-EDIT program on an Atari ST computer.

16 and 24 Channel versions of each are available as well as the 8 channel **GS3-X8** and **GS3V-X8** to expand the console to a maximum of 32 channels. It benefits from the latest technology and manufacturing techniques as well as ALLEN & HEATHs experience and dedication to the design of high performance audio mixers for professional users. The specification matches that of consoles costing many times the price.

THE MECHANICS The construction comprises a flanged steel front panel which slots into purpose designed extruded aluminium sections which form the front armrest and rear cross member. The plastic finish Medite side trims bolt on to these with sturdy M6 hex head bolts. The trims are strengthened by internal steel brackets which connect them to the base. The flat steel base is screwed in place to the armrest, rear member and side brackets using 6AB cross head screws and may be removed for service access. Multiple internal printed circuit assemblies interconnect by means of plug-on connector harnesses for easy circuit assembly removal.

THE CIRCUIT COMPONENTS GS3 audio consoles are manufactured using high quality industry standard linear op-amp, logic gate, discrete semiconductor, and microcomputer circuit designs. There are no electro-mechanical relay contacts in the audio signal path. When operated correctly the normal performance of the console introduces negligible audio signal degradation.

THE POWER SUPPLY The console has a universal low noise, regulated DC power supply unit for all amplifiers, logic and indicator subsystems. External power supply type MPS9 operates from single phase 50/60Hz AC mains input and provides the three regulated DC outputs required for console operation: +16V, -16V, +48V DC. The ±16V supplies are filtered into separate feeds for the audio and indicator/logic circuits The internal computer system uses the +16V DC supply regulated within the console to +5V DC. The power unit transformer is internally wired for the required 100, 110, 220, or 240 V.AC mains.

CALIBRATION Normal operation does not require any internal adjustment or calibration. A single preset adjusts the bargraph meter '0' level. On GS3V consoles and GS3 consoles that have the V5 VCA upgrade installed, each channel VCA includes a preset to trim for minimum harmonic distortion. These presets are factory set.

AMPLIFIER BIASING Audio amplifiers are supplied with ±16V DC and all are centre biased types having negligible offset voltage at input and output terminals. This offset voltage is typically less than 1V with respect to chassis (0V DC).

CONTROL CLICKS The potentiometers, faders and switches are isolated where necessary from the residual DC offset by coupling capacitors. Appearance of loud clicks and crackles during control operation is a fault symptom. Switching +48V phantom power with the fader raised however is not recommended as this may cause an audible click due to the high amplification of the mic pre-amp stage.

AUDIO INPUTS The microphone inputs are electronically balanced (differential), and all line level inputs are unbalanced. Mic input impedance is less than 2k ohm, and Line inputs are greater than 5k ohms.

AUDIO OUTPUTS These are unbalanced as standard. Output impedances are low, to drive loads down to 2k ohms, and are thus capable of driving several high impedance line inputs simultaneously.

PHASE All audio inputs and outputs are in-phase except for the inserts which are phase reversed.

THE PFL SYSTEM The channel PFL switches send pre-fade audio signal to the console PFL mix buss. This is switched within the control room monitor circuit on the MASTER PCB by 4053 CMOS gates (between op-amp stages) biased from a ±7.5V DC supply which is generated locally from the ±16V supply. These gates are switched from the selected monitor source to the PFL signal when the console PFL DC buss is switched to logic 0V by the PFL switch.

THE BARGRAPH METERS The GROUP outputs are fed to the BARGRAPH METER PCB via a 16 way ribbon harness from the MASTER PCB. The meter circuit rectifies and filters these signals to DC voltages which drive the 10-segment bargraph columns. The filter component values determine the attack and decay characteristics of the meter response which is set for QUASI-PEAK (as on many popular multitrack machines). Calibration is by one factory set preset which adjusts the level of all eight meters simultaneously.

THE AUTOMATION SYSTEM

GS3 Series consoles have internal microcomputer controller / real-time sequencer systems which provide comprehensive automation of the fader levels and/or mute switches. Whilst able to communicate and interact with external studio sequencers, computers and MIDI equipment they are not dependant on these to control the console automation. The console computer provides a memory system for storing patch, song and configuration data, and has a MIDI interface for communicating data with external equipment, and a footswitch interface.

Standard **GS3** consoles are programmed with the ALLEN & HEATH **V4** automation software for mute switch control. **GS3** consoles that have the V5 VCA upgrade installed and **GS3V** consoles have **V5** software for mute switch and fader level control.

HOW THE MUTES ARE CONTROLLED The console mutes are electronically controlled by the microcomputer which scans and reads each momentary action MUTE SWITCH and returns control signals to each channel AUDIO MUTE ELEMENT (circuit) to toggle the audio signal (and indicator LED) on or off. The computer multiplexes mute control logic via a 16 way ribbon harness to and from plug-on SLAVE PCBs (one per four channel strips) which in turn demultiplex control signals to and from the mute elements on each IO CHANNEL and GROUP PCB.

THE AUDIO MUTE ELEMENT The audio switch is a special design of electronic solid state switch, developed through a range of successful ALLEN & HEATH products. It uses a field effect transistor (FET) having a practically infinite operating life and very low power consumption. It is operated by a DC control voltage received via the SLAVE circuit from the internal microcontroller. Conditioning circuitry ramps and filters the control voltage to prevent audible clicks. Operation introduces negligible degradation to the audio signal. In particular, noise, control feedthrough (click), harmonic distortion and "shut off" are excellent. A high performance n-channel FET is used, requiring a negative gate "pinch-off" voltage to mute the audio signal.

HOW THE FADER LEVELS ARE CONTROLLED (GS3V & GS3 V5 VCA UPGRADE) The audio faders are replaced with high performance voltage controlled amplifier (VCA) circuits. The faders themselves send DC voltages determined by the fader positions to the internal microcomputer which in turn sends control voltages to the VCAs to set the audio level. These control voltages are mutiplexed via two 16 way ribbon harnesses between the fader SLAVE PCBs (one per 8 channel strips), the KEYBOARD PCB and V-MICRO PCB back to the CHANNEL VCA PCBs (one per 8 channel strips). On **GS3V,** user indication is provided by the three LEDs beside each fader to indicate event and null status. **GS3** consoles that have the V5 VCA upgrade installed do not have the LEDs fitted and consequently user indication is via V-EDIT on the ATARI ST computer.

THE STANDARD GS3 MICROCOMPUTER The GS3 computer system is based on the 8032 microcontroller which reads instructions from the plug-in 16k byte EPROM. This is programmed with the ALLEN & HEATH GS3 **V4** software (indicated by the self adhesive label). Mute and console configuration data is stored in an 8k byte battery backed RAM memory. This battery is trickle charged when the console is powered and should retain the memory for several months with the console switched off. The footswitch and MIDI IN connections are opto-isolated. MIDI THRU and OUT are buffered. The computer and control keypad are mounted on the MICRO PCB which plugs into the BARGRAPH METER PCB which contains the 2-digit 7-segment LED displays and decoders.

THE GS3V MICROCOMPUTER The GS3V computer system is based on the powerful 80C517A microcontroller which reads instructions from a 64k byte EPROM. This is mounted in the removable top panel V-PROM module. It is programmed with the ALLEN & HEATH **V5** software. Fader level, mute and configuration data is stored in a 128k byte battery backed RAM memory. The V-PROM module also houses the optional SMPTE READER/GENERATOR which uses the panel mounted 3-pole SMPTE jack socket. A 12-bit DAC converts the digital signals to analogue fader control voltages. The computer circuit is mounted on the small V-MICRO PCB with mostly surface mount components. The separate KEYBOARD PCB contains the control switches as well as the L-R master VCA circuits It also distributes the logic signals to the FADER SLAVE and CHANNEL VCA PCBs via the 16 way ribbon harnesses.

THE GS3 V5 VCA AUTOMATION UPGRADE From the point of view of the GS3 owner, an upgraded console will be the same as a standard GS3 except for the following:

- The footswitch socket above the MIDI sockets on the console becomes a SMPTE IN/OUT socket. The footswitch function is no longer available.
- The automation control keys are replaced with 7 Function Keys.
- The Left & Right master faders are replaced by a single stereo L/R master fader.

The upgraded GS3 uses the same microcomputer assembly as the GS3V but because there is no V-PROM compartment the V-PROM and SMPTE PCBs are mounted on the rear of the BARGRAPH METER PCB.

The GS3 series Automation system

Note: the control panel shown below is for the GS3V.

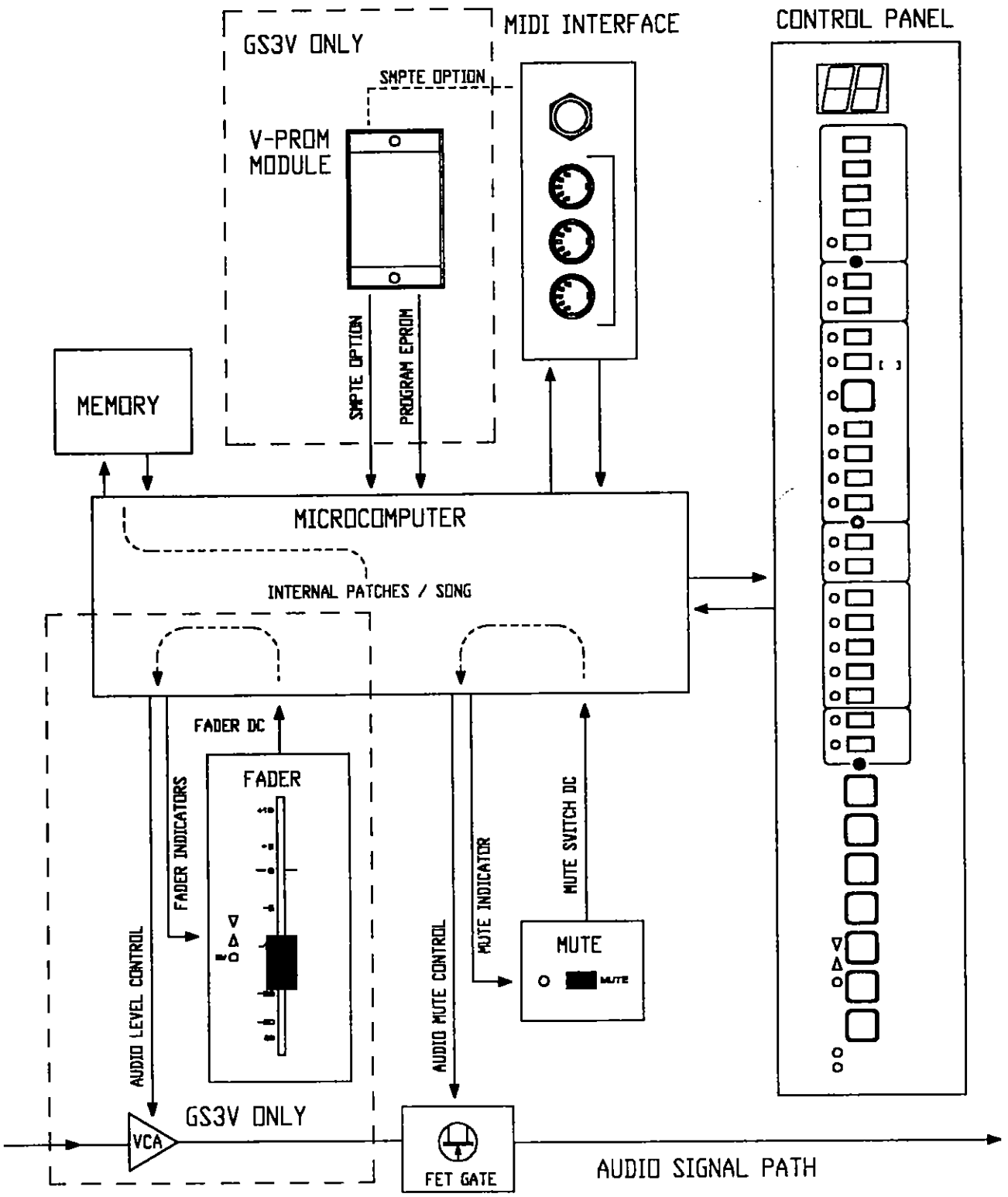

SERVICE NOTE

Correctly installed and operated, the **GS3** and **GS3V** consoles should continue to function with optimum performance without the need for internal adjustment, calibration or maintenance. Several stages of rigorous quality testing are applied during manufacture of this product, and high quality long life components are used throughout to ensure continued reliable operation. As may be expected, mechanical controls and connectors may wear in time with repeated use. In our experience it is typical that just the faders may require replacing during the normal lifetime of the console.

Access to the internal assemblies should only be required if you need to change one of the configurable options, add on an 8-channel expander, upgrade a GS3 with V5 VCA AUTOMATION or replace a worn component such as a fader. If the console has been subject to excessive mishandling or abuse, or a fault is reported, you may need to carry out fault diagnosis and repair. Please refer to the section : *TROUBLESHOOTING* for further guidance on fault finding methods.

The design of this console allows quick access to, and easy replacement of components and assemblies. The basic servicing procedures are detailed later in this section.

SAFETY

Mains electricity is dangerous and can kill. Mains voltage is present within the power unit but not the console itself. Check your mains wiring and earthing arrangements before switching on.

The engineer carrying out the service work must be familiar with and competent in handling audio equipment, mains wiring and earthing.

GOVERNMENT AND INSURANCE UNDERWRITERS ELECTRICAL CODES MUST BE OBSERVED. These codes take precedence over any suggestions in this manual!

LOOKING AFTER YOUR CONSOLE

The following are the simple precautions we recommend to preserve the working life of the console (as printed in the OWNER MANUAL):

CLEANING Use only a clean damp cloth and soft brush. Avoid the use of chemicals, abrasives and solvents.

LUBRICATION The faders, switches and potentiometers are lubricated for life. The use of electrical lubricants on these parts is not recommended.

DIRT AND DUST Protect the console from excessive dirt and dust to prevent damage to moving parts such as the faders and potentiometers.

MOISTURE Protect the console and power supply from moisture and condensation. If either becomes wet, switch off the power supply immediately, allow the equipment to dry out, and have it checked for satisfactory performance by a qualified technician.

GENERAL SERVICE PRECAUTIONS

- We stress the need for careful handling of the console and its internal assemblies. Advanced, highly compact printed circuit assemblies are linked by press-on IDC (insulation displacement connector) harnesses and dedicated wiring looms. Several of these assemblies plug directly on to other assemblies.

- Make sure that you correctly align and press home the connectors and assemblies after carrying out service work.

- We suggest that you develop tidy and methodical working routines to prevent problems due to lost parts or missed procedure stages.

- Work on a suitably sized, clean work surface which is clear of parts or debris which may damage the console cosmetics.

- Remove all dirt and debris such as solder, component legs and wire clippings from inside the console, and check your work carefully before replacing the base.

- Test the reassembled console for correct operation.

- If the console is to be sent by carrier we advise that you check the packing for suitability first. Use the purpose designed ALLEN & HEATH packing if it is not damaged and still intact.

- Log the service work carried out. If applicable use the field service report forms copied from the following pages.

AUDIO AND DC MEASUREMENTS

A general purpose professional quality analog or digital multimeter is recommended for measuring DC voltages, current, component resistances etc. We recommend a meter of 20,000 ohms/V or greater to prevent false readings due to circuit loading. Use shrouded probes to prevent accidental short circuiting of nearby assemblies. A general purpose oscilloscope is an invaluable aid to probing and locating faults. For more advanced audio performance measurement you shall need an audio bandwidth sinewave oscillator (20Hz to 20kHz), and a microvoltmeter capable of reading decibels (dBu or dBm). There are several purpose designed audio test sets available which include a combined oscillator and meter and are ideal for the measuring audio level, frequency, noise and distortion.

If you wish to relate your measurements to the published specification make sure that you understand and simulate the original measurement conditions. For example, we measure rms noise performance with a 20Hz to 20kHz bandwidth referenced to 0VU i.e. the difference between the normal operating level (0 on the meters) and the noise floor. Distortion is measured as THD + noise (total harmonic distortion + residual circuit noise).

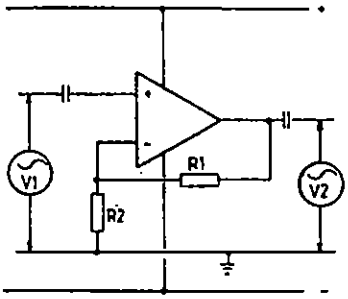

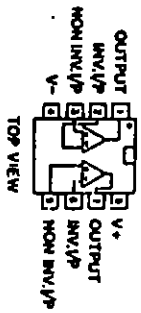

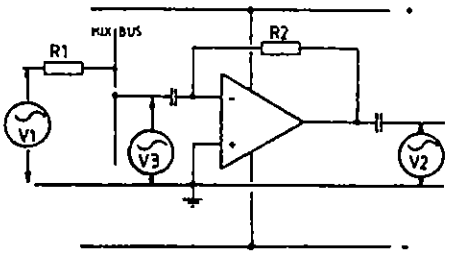

Non-inverting amplifier
GAIN = V2 / V1 = 1+ R1 /R2
dB = 20log(GAIN)

Inverting amplifier
GAIN = V2 / V1 = R2 / R1
dB = 20log(GAIN)
V3 = approx V2 / 10,000 = near 0V

V2 max = +21dBu = approx 10Vrms (28V p-p)

REPORTING A PROBLEM TO ALLEN & HEATH

We are happy to offer comprehensive technical support to assist you with problems or queries relating to our product range. We also welcome customer comment and feedback to help us provide the products and features you want. We have a network of APPROVED SERVICE AGENTS to assist the customer direct and carry out the service work required. Our TECHNICAL SERVICES DEPARTMENT is able to provide telephone or on-site support as necessary to these agents or to customers referred by their agent.

So that we may provide an efficient service we request that all service calls are supported with the relevant console details. A blank copy of both sides of the service form is included here for you to PHOTOCOPY and log the important details. Please quote this information when requesting assistance by telephone.

FIELD SERVICE REPORT Use this form when reporting service work carried out, or field service comments.

ALLEN & HEATH QUALITY ASSURANCE FIELD SERVICE REPORT.

When completed, this form is to be forwarded to:

Allen & Heath Ltd. Quality Control Dept.
Kernick Industrial Estate, Penryn. Cornwall. TR10 9LU.
Tel: 0326 372070 Fax: 0326 377097

All reports received will be used for internal quality auditing purposes. A copy must accompany any returned products.

Part 1 CUSTOMER FAULT REPORT

Customer Name: _____

Product: _____ Serial No: _____ Date Purchased: / /

Dealer: _____

Customer Fault Description: _____ Date: / /

Part 2 TECHNICIAN REPORT

Compiled by: _____ Date: / /

Contact Telephone No: _____ Company: _____

Address: _____

CONSOLE INOPERATIVE: TOTALLY ❑ PARTIALLY ❑

FAULT NATURE: PERMANENT ❑ INTERMITTENT ❑

FAULT LOCATION: CHANNEL ❑ GROUP ❑ MASTER ❑ MPC ❑ PSU ❑

FAULT COMMENT: _____
continue overleaf if necessary _____
_____

CAUSE:

COMPONENT: INCORRECT VALUE ❑ NOT FITTED ❑
INCORRECT FIT ❑ FAILURE ❑

SOLDERING: SHORT ❑ PCB ❑
DRY JOINT ❑ WIRE ❑

HARNESS: FAULTY CONNECTION ❑ INCORRECT FIT ❑

FUSE BLOWN: ❑ TYPE & VALUE: _____

MECHANICAL: METALWORK ❑ PCB ❑

INDETERMINATE: CONSOLE ❑ PSU ❑

OPERATOR: ❑ Comments: _____
_____

OPERATING CONDITIONS: HIGH TEMPERATURE ❑ HIGH HUMIDITY ❑

ITEM(S) BEING RETURNED: YES ❑ NO ❑ OTHER ❑

FOR: REPAIR & RETURN ❑ REPLACE ❑

P.T.O.

ADDITIONAL COMMENTS ON FAULT. see overleaf

Part 3: FOLLOW UP ACTION (To be completed by Allen & Heath)

Defect Reference: _____

SERVICE ACCESS

To gain access to the internal assemblies you need to remove the flat steel base. Most service work and module replacement can be carried out without removing the side trims, extrusions or front panel. The exception is access to the computer assembly for EPROM replacement or footswitch option setting. The GS3 requires only that you remove the right hand side trim and not the base. For the GS3V however; the EPROM can be replaced by simply removing the V-PROM cover plate on the front panel. (see section on EPROM REPLACEMENT)

NOTE: Do not remove both side trims at the same time. This may cause the front panel assembly to spring out of the front and rear extrusions.

Please observe the GENERAL SERVICE PRECAUTIONS listed earlier in this section. To remove the base:

1. Disconnect the power supply and all cables from the console.
2. Place the console upside down on a suitable flat surface.

PRECAUTIONS: Make sure that your work surface is clear of dirt and debris which may damage the control knob finish. It is best to place a clean table cloth or foam sheet over the work surface first. Avoid balancing the console on one of its corners as this may damage the trim.

3. Remove the front, rear and side base screws using a 2-point crosshead (Pozidriv) screwdriver. Lift off the base. It may be necessary to prise up the rear of the base using a small flat screwdriver.
4. Carry out the work required.
5. Check the accuracy of your work and connector alignment before replacing the base. Remove all solder debris etc. Make sure that the circuit assemblies and plug-on harnesses are correctly seated.

NOTE: If you have had to remove any circuit assembly cable tie supports such as may be fitted to the SLAVE assemblies, please replace these as previously fitted.

6. Refit the base. Note the correct orientation, ie. the foam tape strip lines up with the SLAVE assembly positions.

PRECAUTION: Do not overtighten the base screws. These self tap into the aluminium extrusions and steel side brackets.

7. Reconnect the power and cables and test for correct operation.

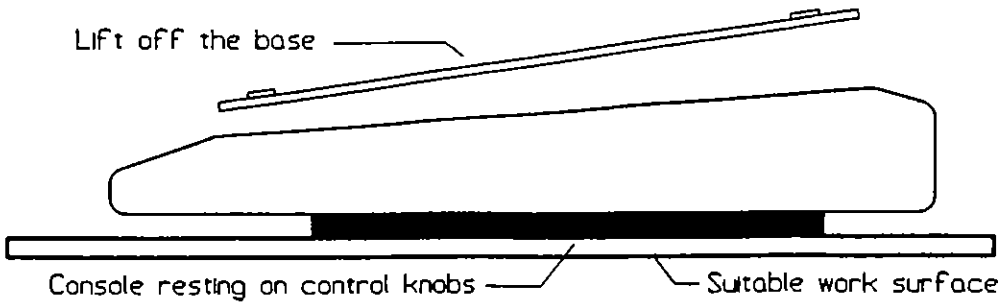

FADER REPLACEMENT

One or more of the faders may need replacing if they have been subject to extensive mechanical wear, or to operator misuse such as having liquids or ash spilled in them. We do not recommend the use of electrical contact lubricants or sprays which may shorten their working life further. Check the condition of all the faders as it may be worth replacing the full set in one go if they are generally worn. Fader replacement is simple, and the parts are not costly.

To change a **Channel** fader on the **GS3V**, refer to the section GS3V - FADER REPLACEMENT.

To replace a fader:

1. Pull the knob off the suspect fader.
2. Disconnect the console, position it upside down on a suitable clean work surface, and remove the base as detailed earlier. Overhang the front of the console to access the fader mounting screw positions.
3. Identify the suspect fader and desolder the three connection wires soldered to its tags.
4. Use a 1-point crosshead screwdriver to remove the two fader screws.

PRECAUTION: Depending on the fader type, 3mm long M3 clearance spacers may be fitted to these two screws between the front panel and the fader body. Take care not to lose them.

5. Fit the replacement fader with the screws supplied (or the original screws if none are supplied) and the pillars (if required).

PRECAUTIONS: Make sure that the fader is correctly orientated. If it is fitted the wrong way round it will not function correctly. Do not fit longer screws as these may cause the fader to jam before the end of its travel.

6. Solder on the three wires to the correct tags. These are numbered. Re-tin the ends of the wires with new solder to ensure reliable joints.
7. Carefully press on the fader knob.

PRECAUTION: Do not apply excessive pressure when pressing on the fader knob as this may cause the fader body to spring apart.

8. Remove any debris, check your work and refit the base.
9. Reconnect the console and test for correct operation.

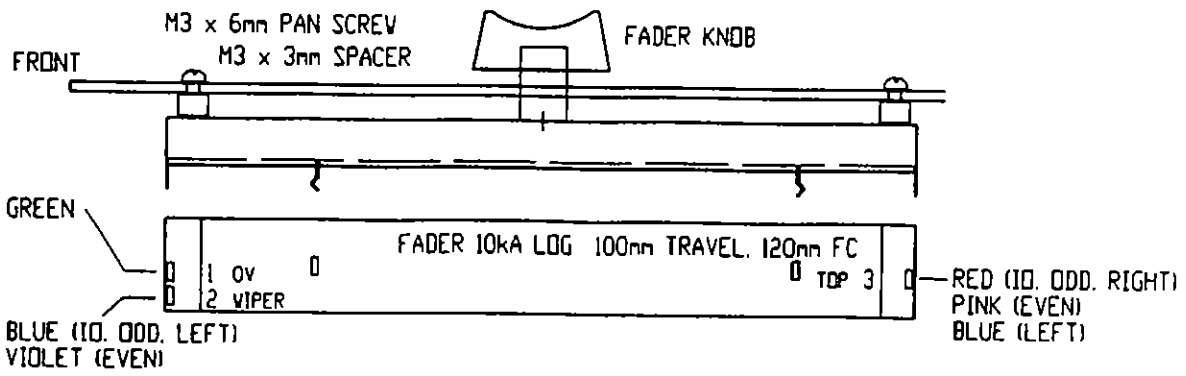

GS3V - CHANNEL FADER REPLACEMENT

On the GS3V, the **Channel** faders are soldered onto Fader Slave PCBs (8 per PCB) and mounted under the front panel. Thus if you need to replace a fader, you may want to consider replacing all 8 faders on the PCB. The faders are grouped 1 to 8, 9 to 16 etc, on the PCBs. To replace a fader:

1. Pull the knobs off the group of faders containing the fader(s) to be replaced.
2. Disconnect the console, position it upside down on a suitable clean work surface, and remove the base as detailed earlier. Overhang the front of the mixer to access the fader mounting screws.
3. Remove the two side trims using a 4mm Hex key and then remove the front extrusion by unscrewing the nuts fixing the Headphone and Footswitch sockets.
4. Remove the two IDC harnesses from the VCA & Fader Slave PCBs.
5. Use a 1-point crosshead screwdriver to remove the 2 screws mounting the VCA Slave PCB on the Fader Slave PCB.
6. Unscrew the 16 mounting screws retaining the Fader Slave PCB to the front panel. The Fader Slave PCB can now be carefully lifted from the console.

PRECAUTION: Take care not to bend the LEDs mounted on the PCB as this will make the refitting of the PCB more difficult.

7. Desolder the 3 tags (A) at the edge of the PCB, and the 2 tags (B) towards the centre of the fader.
8. Carefully bend out the 3 tags (A) at the edge of the PCB and remove the fader.
9. Secure the new fader in place by bending the tags (A) and soldering them to the PCB.
10. Solder the 2 tags (B) in the centre of the fader.
11. Repeat steps 6 to 9 for any other fader(s) that need replacing.
12. Carefully locate the PCB in the console. Check the location of the triangular LEDs in the front panel and tighten the 16 mounting screws. Then replace the VCA Slave PCB and the two IDC harnesses.
13. Refit the consoles's front extrusion and fit the two side trims. Remove any debris, check your work, then refit the base.
14. Position the console the right way up and **carefully** press on the fader knobs.

PRECAUTION: Do not apply excessive pressure when pressing on the fader knobs as this may damage the faders.

15. Reconnect the console and test for correct operation.

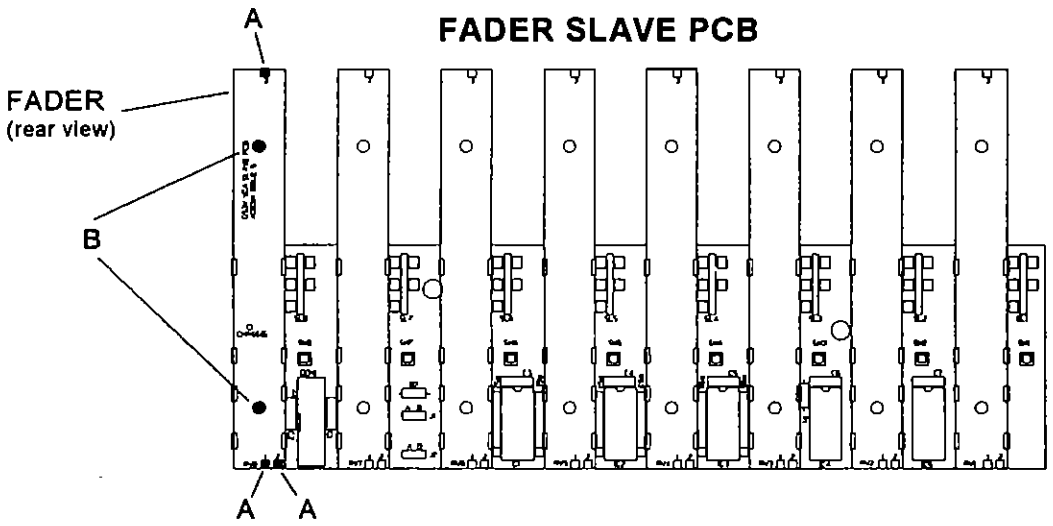

GS3 EPROM REPLACEMENT

The software that runs the V4 plus MUTE AUTOMATION is programmed by ALLEN & HEATH into a 128k byte EPROM. This is a 28-pin integrated circuit (IC) which plugs into an IC socket on the component side of the MICRO circuit assembly. You may identify it easily as it has a self adhesive label identifying the version number, for example:

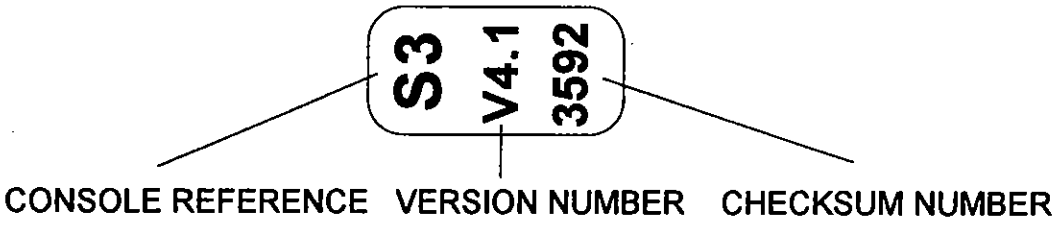

Please quote the version and checksum number, as well as the console serial number when discussing the EPROM with ALLEN & HEATH.

If you need to replace the EPROM, for example to take advantage of a new software release, proceed as follows:

1. Disconnect power from the console.
2. Remove the right hand (master end) side trim. Use a 2-point crosshead screwdriver to remove the three base side screws, and a 4mm hexagonal allen key to remove the six side bolts.
3. Identify and remove the EPROM using a suitable IC extractor tool. Alternatively you may use a small flat screwdriver to lever the EPROM out with care. To do this you may need to slide the front panel sideways so that it slightly overhangs the edge of the console. Note the orientation of pin 1 on the EPROM first before removing it. Then plug in the replacement EPROM.

PRECAUTION: Take care to ensure that the EPROM pins are correctly aligned in the socket holes. Press it in fully and with even pressure. Check that none of the pins are bent out or distorted, and make sure that it is plugged in the right way round.

4. Refit the side trim, connect power and check for correct operation.
5. Log the version and checksum numbers of the replacement EPROM for future reference.

NOTE: You must reset the console defaults after replacing an EPROM. This replaces the settings held previously by the battery backed memory with the new factory defaults. To do this, press and hold the CLEAR key whilst powering up the console. On release the new defaults are operational.

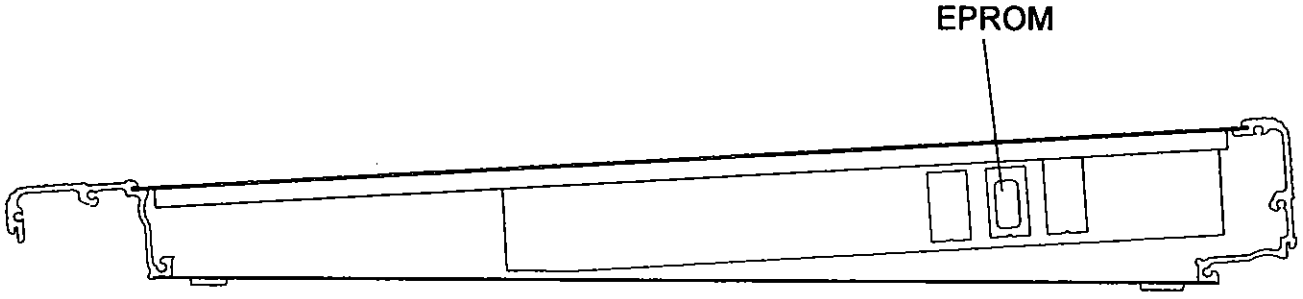

CONSOLE WITH RIGHT HAND SIDE TRIM REMOVED

GS3V EPROM REPLACEMENT

From time to time Allen & Heath will issue software upgrades in the form of a replacement EPROM.

This is located in a compartment beneath the V-PROM cover plate directly below the D.C. power connector . It has a self adhesive label identifying the software version number.

When contacting ALLEN & HEATH; please quote the software version number as well as the console serial number.

NOTE: **You must reset** the console defaults after replacing the EPROM. This replaces the settings stored in the battery backed memory with the new factory defaults. To do this; **press and hold** the **ERASE** switch at power on.

Before commencing; **remember to disconnect the power from your console** then follow the procedure below:

1

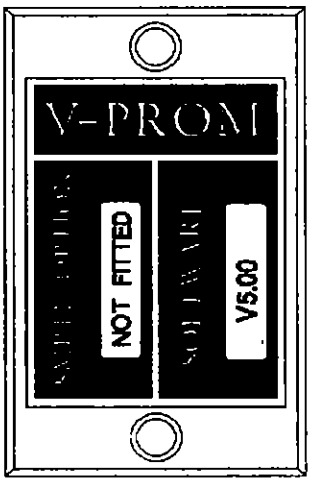

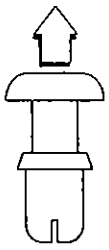

Remove the 2 plastic snap rivets securing the **V-PROM** cover plate to the console front panel.

2

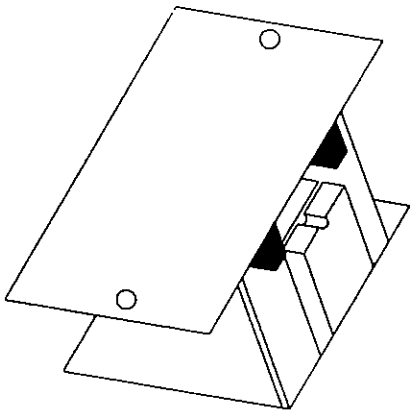

Carefully ease the **V-PROM** module from the console. Take care not to damage the harness connected to the module.

3

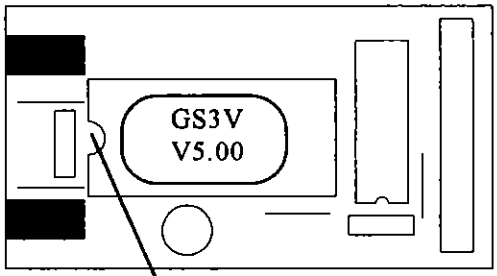

Remove the **EPROM** using a suitable IC extractor. Alternatively; you may use a small flat screwdriver to lever the **EPROM** out with care.

4

Check orientation of EPROM

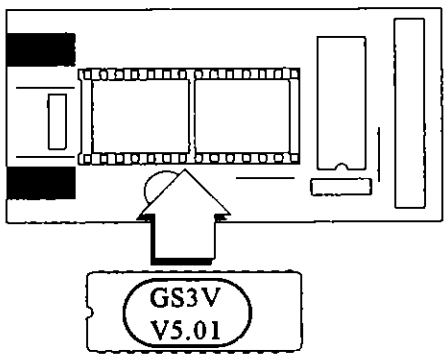

Insert the new **EPROM** ensuring that the orientation is correct and that none of the pins are bent out or distorted. Now reassemble the module in reverse order.

GS3 V5 UPGRADE EPROM REPLACEMENT

The software that runs the V5 VCA AUTOMATION is programmed by ALLEN & HEATH into an EPROM. This is plugged into an IC socket located on the V-PROM PCB which is mounted on the component side of the METER PCB. You may identify it easily as it has a self adhesive label identifying the version number.

Please quote the version number, as well as the console serial number when discussing the EPROM with ALLEN & HEATH.

If you need to replace the EPROM, for example to take advantage of a new software release, proceed as follows:

1. Disconnect the power supply and all cables from the console.
2. Place the console upside down on a suitable flat surface.

PRECAUTIONS: Make sure that your work surface is clear of dirt and debris which may damage the control knob finish. It is best to place a clean table cloth or foam sheet over the work surface first. Avoid balancing the console on one of its corners as this may damage the trim.

3. Remove the front, rear and side base screws using a 2-point crosshead (Pozidriv) screwdriver. Lift off the base. It may be necessary to prise up the rear of the base using a small flat screwdriver.
4. Locate the V-PROM PCB mounted on the METER PCB.

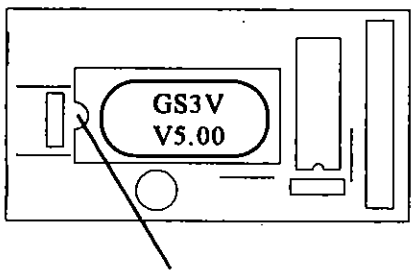

Note Position of notch

Check orientation of EPROM

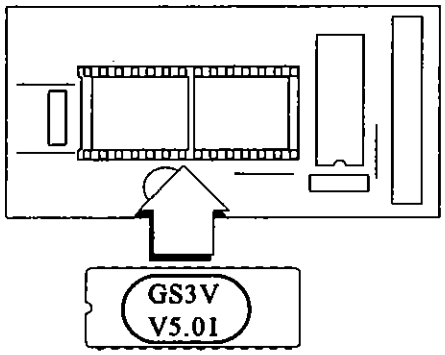

5. Remove the **EPROM** using a suitable IC extractor. Alternatively; you may use a small flat screwdriver to lever the **EPROM** out with care.
6. Insert the new **EPROM** ensuring that the orientation is correct and that none of the pins are bent out or distorted.

7. Refit the base. Note the correct orientation, i.e.. the foam tape strip lines up with the SLAVE assembly positions.

PRECAUTION: Do not overtighten the base screws. These self tap into the aluminium extrusions and steel side brackets.

8. Log the version and checksum numbers of the replacement EPROM for future reference.
9. Reconnect the power and cables and test for correct operation.

NOTE: You must reset the console defaults after replacing an EPROM. This replaces the settings held previously by the battery backed memory with the new factory defaults. To do this, press and hold the F6 function key whilst powering up the console. On release the new defaults are operational.

VCA CALIBRATION

There are two different types of PCB that require VCA calibration. The Channel VCA PCB has 8 presets (A) used for trimming the harmonic distortion of the 8 VCAs (B) on the PCB. The Keyboard PCB has 2 presets used for trimming the harmonic distortion of the master left & right VCAs. These are factory set and do not normally require any adjustment. The presets (A) are miniature horizontal types situated to the top left of each VCA IC (B).

To calibrate each Channel VCA:

1. Set the fader of the selected Channel at the 0dB level.
2. Connect an unbalanced +10dBu low distortion 1kHz sine wave signal to the LINE IN socket of the Channel.
3. Route the signal to GRP /DIR OUT of the Channel and adjust the input GAIN control until +2dBu is measured at GRP /DIR OUT (+14dBu for high level multi-track option).
4. Adjust the VCA preset (A) until minimum harmonic distortion is obtained (typically 0.005%).

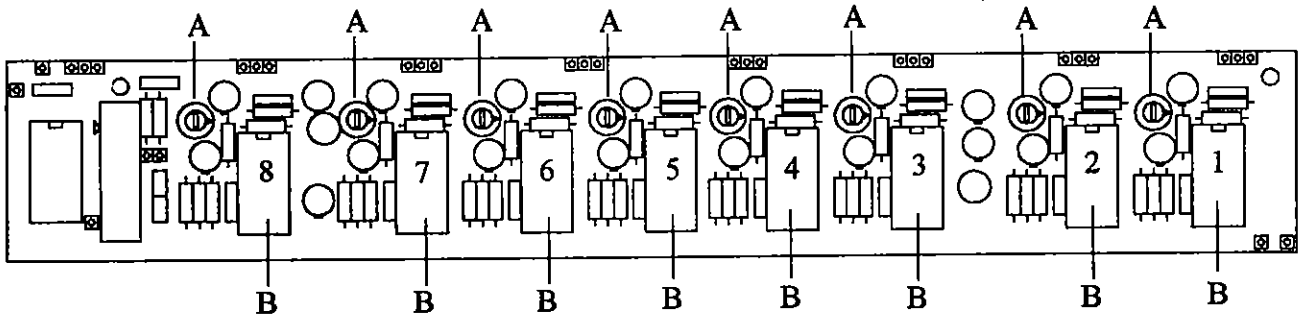

To calibrate the L & R master VCAs:

1. Set the master fader at the +10dBu level.
2. Connect an unbalanced +10dBu low distortion 1kHz sine wave signal to the L INSERT socket of the Master section.
3. Route the signal to the 2 TRK TAPE OUT 1 socket. (tip = left, ring = right)
4. Adjust the VCA preset (A) until minimum harmonic distortion is obtained (typically 0.005%).
5. Repeat the procedure for the right VCA by connecting the input signal to the R INSERT.

S3V KEYBOARD PCB

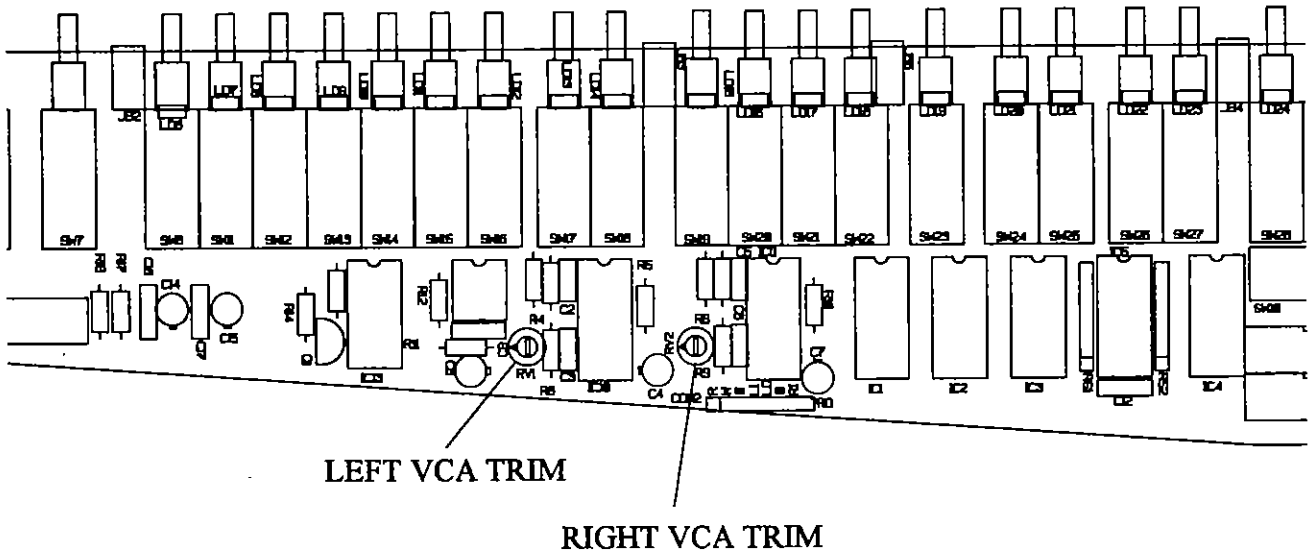

METER CALIBRATION

There is one preset adjustment that sets the operating level of all ten bargraph meters. This is factory set and does not normally require re-adjustment. The preset is a miniature horizontal type situated between meters 2 and 3 on the component side of the DISPLAY circuit assembly. First obtain 316mV rms (-8dBu or -10dBV) from the L-R outputs, and then adjust the preset so that the L-R meters read "0" (first red LED just on). The L-R and group meters will now be correctly set.

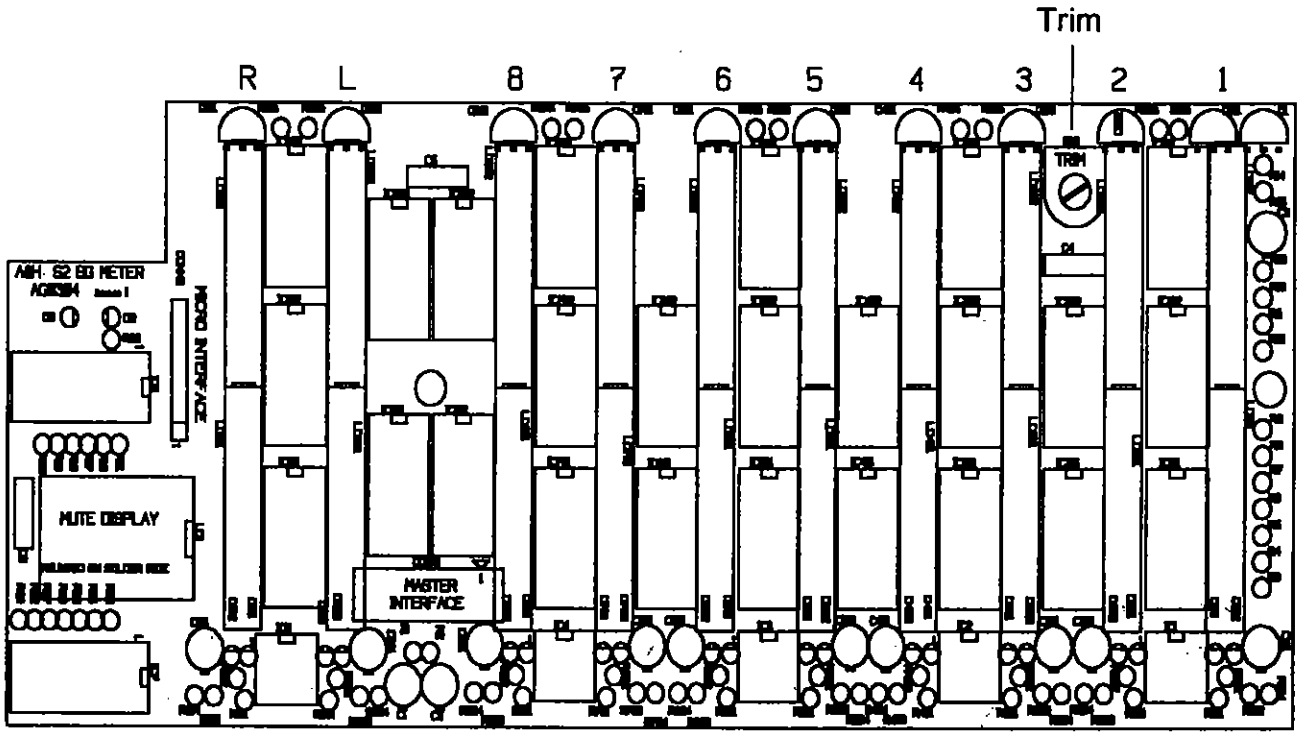

COMPONENT AND MODULE REPLACEMENT

Please refer also to the GENERAL SERVICE PRECAUTIONS and how to gain SERVICE ACCESS earlier in this section.

Individual components may be replaced easily by desoldering them from the individual circuit assemblies. To gain access to some you may need to unplug the related connector harness and release the assembly from the front panel to raise it slightly first.

PRECAUTION: Avoid damage to nearby circuits when working on an assembly within the console. In particular, take care not to bend component legs so that they short circuit to each other.

To replace a complete channel assembly (module) first unplug the related connector harnesses and piggy back assemblies (if applicable). Remove the rotary control knobs, potentiometer and connector nuts, and front panel fixing screws. Use a 1-point crosshead screwdriver and 10mm, 11mm, and 15mm nut drivers for this.

PRECAUTIONS: Make sure that the replacement module potentiometers and connectors are correctly aligned in the panel holes before tightening the nuts. Also note that the IO CHANNEL, SLAVE, and GROUP assemblies must be correctly assigned according to their position in the console. Refer to the circuit and component layout diagrams for these details.

NOTES:

The console is at the control centre of most typical audio installations. It provides the link between multitrack and 2-track recorders, amplifiers, processing devices, computer equipment, microphones, instruments etc. through a "highway" of interconnecting cables carrying audio, computer, DC, and AC mains power voltages. If a problem is reported it is often the console that is assumed to be at fault. Our experience has shown that most studio problems are related to faulty cables, equipment matching and control setting, or faulty external equipment, and not the console itself which is designed for continued fault-free performance with no user maintenance.

When a problem is reported it is necessary to isolate the location of the fault within the system. Only when tests have been made to eliminate faults in equipment connected to the console and in the interconnection cables, should you attempt to repair the console.

Note that only technically competent personnel should attempt service work on this console and its power supply unit.

IDENTIFYING THE FAULT

Fault diagnosis is often carried out by telephone with the user, who is often non-technical and needs to be talked through a series of simple tests to identify the symptoms and locate the problem. These include; substitution of cables and/or substitution of equipment at the inputs and outputs. If the console is still suspected as faulty, it is recommended that all of the cables are unplugged from the console, except for the DC power connector and a good pair of headphones. Using the internal 1kHz oscillator and a suitable audio lead, patch across the channels to test for correct circuit operation. This often eliminates problems with system earthing and matching with external equipment. The OWNER MANUAL for this console is written to help the user prevent problems through mismatching, wrong connection etc. The relevant pages are reprinted later in this section so that you may help him through the initial stages of user troubleshooting if required. Further fault-finding tables are also provided. Refer to PART C for full technical information including block schematics, circuit diagrams, component layouts, and other assembly drawings.

Faults may be of a permanent or intermittent nature. If intermittent, try to induce the symptom by flexing cables, wiggling connectors, selective mechanical vibration or flex, and thermal (hot, cold) cycling.

Use substitution of known good circuits to aid identification of the faulty circuit.

QUICK CONSOLE TEST

The console normal operation may be confirmed by these quick and simple tests:

1. Switch on the power supply. The MUTE PROCESSOR DISPLAY should display a "0". A flashing, dead, or different display indicates a fault.
2. Press any PFL switch. The adjacent yellow LED and the red PFL ACTIVE LED should light.
3. Select the OSC TO GRPS switch set for 1kHz to test the group BARGRAPH METERS. These should follow the OSC LEVEL and group fader positions.

If the console fails one or more of these tests, there may be a major DC malfunction which must be repaired before attempting repair of individual sections. If the console fails all tests, then check that power is being supplied to the console.

Below is a list of the the most common audio system faults:

1. EXTERNAL INTERCONNECTIONS

Cable termination breakdown due to; unreliable soldering or twisting, kinking or stressing of leads, and/or connection errors. Hum may be caused by earth loops.

2. EQUIPMENT MATCHING

Problems with level and impedance matching, as well as incorrect control settings.

3. SYSTEM ENVIRONMENT PROBLEMS

Noise and interference caused by the proximity of audio cables and equipment to AC mains and computer equipment.

4. INTERNAL CONNECTIONS

Connectors loose or detached usually due to excessive vibration and handling abuse.
Connectors incorrectly fitted due to poor service work.

5. ELECTRO-MECHANICAL DEFECTS

Fader, potentiometer or switch movements broken or worn.

6. ELECTRONIC COMPONENT DEFECTS

IC, transistor, or other component failure.

TROUBLESHOOTING CHART

FAULT- **CONSOLE DEAD.**

No AC mains supply to the power supply unit.

Check that AC mains is present and supplied to the power supply unit.

Power supply fuse blown.

*Replace with **correct anti-surge type rated fuse.***

Power supply component fault.

Refer to section: THE POWER SUPPLY.

Unplug and test the DC power connector.

Short circuit on DC power rails.

Use a multimeter to test for shorts across the DC rails.

FAULT- **METERS DEAD, CONSOLE OTHERWISE OK.**

Internal Meter ribbon harness not fitted correctly.

Remove console base and check meter ribbon harness connection.

FAULT- **ONE CHANNEL LED NOT WORKING.**

Internal ribbon connector misaligned or not fitted correctly.

Remove console base and check main ribbon harness connection.

Channel component fault.

Refer to SECTION C for relevant circuit diagrams & component layouts.

FAULT- **MUTE PROCESSOR DISPLAY FLASHING "0".**

Memory failure.

See section titled ERRORS in mute automation owner manual.

FAULT- **ALL MUTE SWITCHES NOT WORKING (FROZEN).**

Local mode set to "off".

Set Local mode "on" by pressing the SHIFT key and then pressing the LOCAL key.

Central mute processor fault

Refer to SECTION C for relevant circuit diagrams & component layouts.

FAULT- **ONE OR MUTES NOT WORKING.**

Channels isolated.

Change isolation status or switch console off and on to reset.

Mute Slav fault (likely if a block of 4 channels is dead).

Check that Slave PCBs and harness connectors are correctly fitted.

FAULT- PATCH 0 AND CONFIGURATION SETTINGS LOST ON POWER UP.

Battery or memory fault.

GS3: Check that the internal battery measures between 2.8V and 3.6V. This does not normally need replacing as it is trickle charged when the console is powered up. If the console has not been used for several months it is best to leave it powered up for a day or so to recharge.

GS3V & GS3 UPGRADE: As above, but the battery should measure between 2.0V and 2.4V.

FAULT- INCORRECT MULTITRACK INPUT, OUTPUT AND METER LEVELS.

Incorrect tape level matching.

Standard factory settings for LOW level (316mV, -10dBV) operation. The I/O channel circuits may be modified for HIGH level (+4dBu) operation. Refer to section: OPTIONS.

FAULT- 2 -TRACK OUTPUT FAULT - DEAD, DISTORTED, or NO RIGHT SIGNAL.

Incorrect installation cable wiring.

The 2-track inputs and outputs are on three pole (stereo) jacks. Plugging in mono jack leads will short out the right signal. A suitable splitter lead should be used as specified in the AUDIO SYSTEMS OWNER MANUAL.

FAULT- ALT MONITOR AND/OR STEREO CUE OUT RIGHT SIGNAL DEAD OR DISTORTED.

Cause as above.

NOTE: These connectors are three pole (stereo).

FAULT- CHANNEL, GROUP OR L-R SIGNAL DEAD OR DISTORTED.

Insert not correctly wired, or external processing equipment not switched on.

This may be checked by unplugging the insert.

Worn or faulty Insert socket.

With nothing plugged into the insert socket the signal is internally routed through the socket contacts. Check this by plugging in an unwired 3-pole jack plug and shorting tip (send) to ring (return).

FAULT- FADER INTERMITTENT OR NOT OPERATIONAL.

Fader mechanically worn or broken. Or disconnected fader wire.

Check fader wiring and inspect fader for signs of damaged or wear.

FAULT- EXCESSIVE NOISE (HISS) OR DISTORTION.

Incorrect level matching, for example connecting to a sensitive amplifier.

FAULT- **EXCESSIVE NOISE (HUM).**

Ground (earth) loop formed due to multiple earth paths.

See section titled EARTHING THE AUDIO SYSTEM in the AUDIO SYSTEMS owner manual.

AC hum field induction. Console or audio cables positioned too close to the power supply unit or other AC mains equipment and cables.

FAULT- **EXCESSIVE NOISE (BUZZ).**

Internal or external computer interference or breakthrough.

Check that the studio computer equipment and associated cables are kept well away from the console and audio cable harnesses.

Check that the console base is earthed through the internal wire strap which connects to the rear extrusion.

FAULT- **EXCESSIVE NOISE .(eg. CLICKS, THUMPS, CRACKLES, POPS)**

Clicks and thumps may be due to excessive circuit DC or offsets.

Refer to SECTION C for relevant circuit diagrams & component layouts.

Crackles and pops may be due to noisy ICs, transistors or resistors.

Refer to SECTION C for relevant circuit diagrams & component layouts.

FAULT- **ALL CHANNEL FADERS, OR 8 CHANNEL FADERS, NON-OPERATIONAL. (GS3V & GS3 V5 UPGRADE ONLY)**

VCA & Fader Slave harnessing from Keyboard PCB incorrectly fitted.

Remove console base and check the VCA ribbon harness connections.

Harnessing from V_Micro PCB to Keyboard PCB incorrectly fitted.

Remove console base and check the switch ribbon harness connections.

FAULT- **PROCESSOR DISPLAY BLANK. (GS3V & GS3 V5 UPGRADE ONLY)**

Harness and/or keyboard connector incorrectly fitted.

Remove console base and check Keyboard PCB to Meter PCB connections.

FAULT- **CHANNEL NULL/EVENT LEDS NON-OPERATIONAL OR INTERMITTENT. (GS3V ONLY)**

LED PCB not connected to Fader Slave PCB.

Check LED PCB mounting pads are soldered to Fader Slave PCB.

FAULT- **CHANNEL FADER MOVES MORE THAN ONE FADER ON V_EDIT. (GS3V & GS3 V5 UPGRADE ONLY)**

Incorrect assignment of Fader Slave PCB(s).

Refer to the GS3V X8 EXPANDER OPTION section in this manual for assignment details.

FAULT- **SYNC LED NOT LIT WHEN PLAYING TAPE.**
(GS3V WITH SMPTE OPTION INSTALLED)

(CONSOLE FAILS TO SYNCHRONISE TO TIME CODE)

1) Check the tape has been striped with time code.

2) Check the timecode signal level is high enough. (see SPECIFICATION)

3) Check the connecting lead between console SMPTE IN/OUT socket and tape machine.

4) Check SMPTE Option has been recognised by the automation system in the console by checking that the Generator is working. (see section on INITIAL SYSTEM CHECK)

5) Check for ground continuity between the console and the tape machine.

6) Check the console has detected the Frame rate of the time code on the tape or generator, by running the console SMPTE generator for a few seconds.

FAULT- **SYNC LED FLASHES ON & OFF AT RANDOM WHEN PLAYING TAPE.**
(GS3V WITH SMPTE OPTION INSTALLED)

(CONSOLE DROPS IN & OUT OF SYNC AT RANDOM)

1) Check the timecode on the tape for signal level variation or "drop out".

FAULT- **PLAY LED DOES NOT FLASH WHEN GENERATOR IS STARTED**
(GS3V WITH SMPTE OPTION INSTALLED)

(CONSOLE FAILS TO RECOGNISE THE SMPTE OPTION)

1) Check SMPTE Option is installed correctly (see section on INSTALLATION).

2) Check the V-PROM software version is V5.03 or later.

If problem persists, call Technical Support.

FAULT- **PLAY LED FLASHES BUT NO TIME CODE IS BEING RECORDED.**
(GS3V WITH SMPTE OPTION INSTALLED)

1) Check the SMPTE lead connections are not reversed.

If problem persists, call Technical Support.

The standard power supply for this console is the external free-standing:

MPS9 POWER SUPPLY UNIT

This unit connects to the local AC mains supply of matching voltage, and provides the regulated DC operating voltages required by the console. The MSP9 DC output lead is terminated in an in-line 5 pin XLR female connector which plugs into the console DC INPUT

SPECIFICATION:

AC MAINS INPUT: 50Hz to 60Hz 200 VA max.

Input is via a standard 1.5 metre long 3-core mains lead.

The AC mains input setting is indicated on the panel label:

setting:		fuse:	
	240V.AC (235-245V)		1 A.T 20mm x 5mm
	220V.AC (210-235V)		1 A.T 20mm x 5mm
	110V.AC (105-120V)		3 A.T 1 1/4" x 1/4"
	100V.AC (96-106V)		3 A.T 1 1/4" x 1/4"

DC OUTPUT: Rectified, smoothed and regulated, linear design

Short circuit protected

Output is via a 4-core 1.5 metre long lead terminated in an in-line 5-pin XLR female connector.

+15V.DC +/- 1V at 2.75 Amps max.

-15V.DC +/- 1V at 2.75 Amps max.

+48V.DC +/- 1V at 0.1 Amps max.

TECHNICAL DESCRIPTION:

The MPS9 is a free-standing unit comprising a folded steel chassis with finned heat sink, and a removable perforated steel cover. The AC mains input voltage is fed through an anti-surge protection fuse, stepped down through a low hum field toroidal transformer, rectified through a full-wave bridge rectifier, smoothed, and regulated by high performance 3-pin IC regulators. The circuit components are mounted on a high grade fibreglass printed circuit board (PCB). The regulators and bridge rectifier are attached to aluminium heat sinks for free-air cooling through the ventilated cover.

AC MAINS INPUT: The AC mains setting and the fuse type of the MPS9 are indicated on its panel label. The unit may be configured for a different input voltage by rewiring the toroidal transformer and changing the fuse value accordingly. If you need to do this please observe the following precautions:

1. **SAFETY!** Mains electricity is dangerous and can kill. Mains voltage is present within this power supply unit. Only technically competent service personnel should attempt service work on this unit.
2. **GOVERNMENT AND INSURANCE UNDERWRITERS ELECTRICAL CODES MUST BE OBSERVED.** These codes take precedence over any suggestions made in this manual.
3. **SWITCH OFF AND DISCONNECT** this power supply unit before removing the cover.
4. **CHECK YOUR MAINS WIRING** and service work before switching on.
5. **REPLACE COVER** before switching on.

THE FUSE The fuse protects the console and power supply unit from irreparable damage in the event of a major component failure. Should the unit draw more than the rated fuse current, the fuse will blow the rated fuse thus isolating the unit from the AC supply.

The correct fuse is a "T" (time delay) or anti-surge type. If it is replaced with a fast blow type it may blow when the unit is switched on due to the "power-up" surge characteristic of linear power supplies. Always use the correct type and rating.

The failure of a fuse of the correct type and rating usually indicates a circuit fault. In rare cases a fuse may fail simply due to fatigue. In this case replacement quickly restores normal operation. If, however, the replacement fuse blows as well this suggests a circuit fault which should be diagnosed and corrected first.

To remove and check the fuse use a flat screwdriver or a small coin to press in and turn the fuse holder insert anti-clockwise. Pull the insert out to access the fuse.

CHECKING FOR NORMAL OPERATION

If a power supply fault is suspected, first disconnect the unit from the console and probe the DC lead 5-pin connector for the presence of the correct voltages.

If the voltage rail fails only when the unit is plugged into the console, then a console short circuit may be suspected.

If the power supply itself is proved to be faulty, then the IC regulators and rectifier should be checked first.

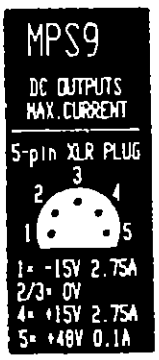

TRANSFORMER AND FUSE SETTINGS FOR AC MAINS

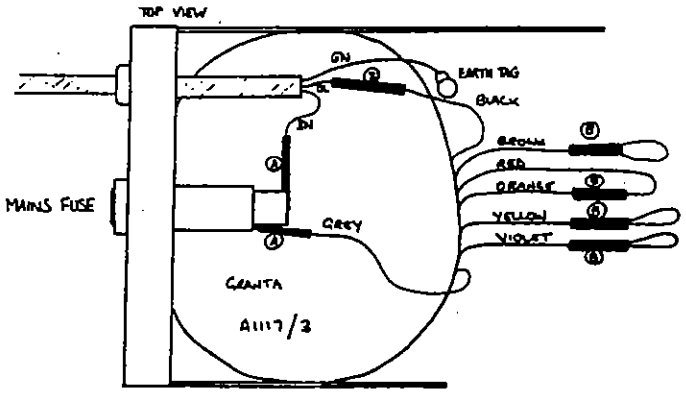

240 V.AC

FUSE = 1 Amp T
20mm x 5mm

U.K.

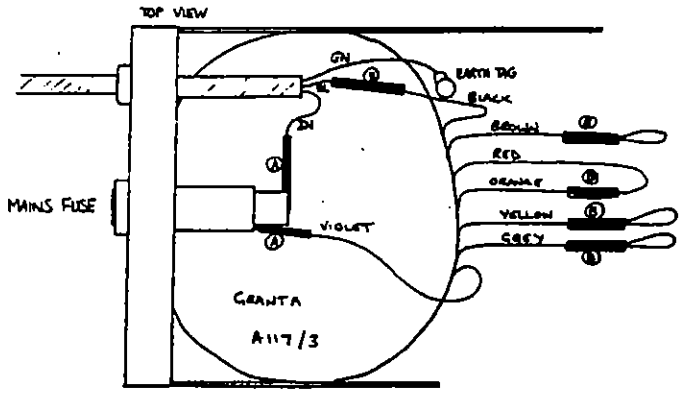

220 V.AC

FUSE = 1 Amp T
20mm x 5mm

Europe, Ireland

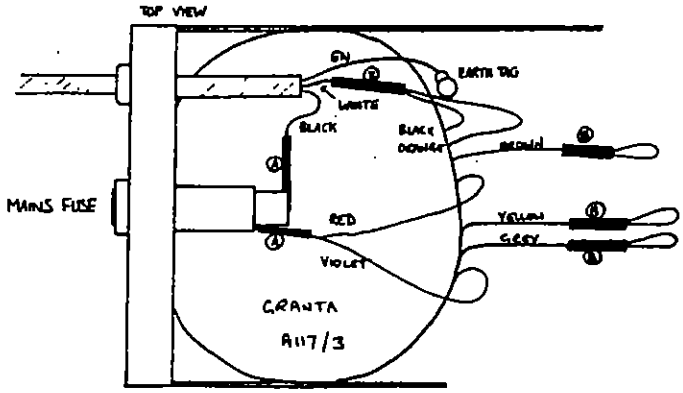

110 V.AC

FUSE = 3 Amp T
1 1/4" x 1/4"

U.S.A, Canada

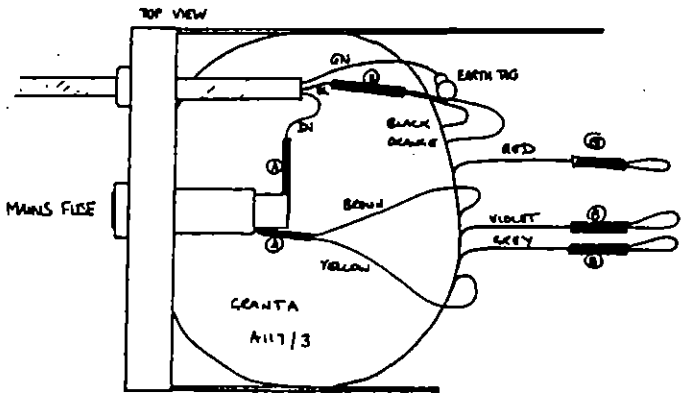

100 V.AC

FUSE = 3 Amp T
1 1/4" x 1/4"

Japan

MPS9 ASSEMBLY

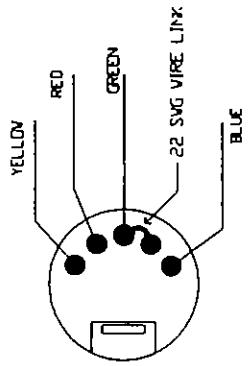

CONSOLE
PLUG WIRING
(SOLDERING VIEW)

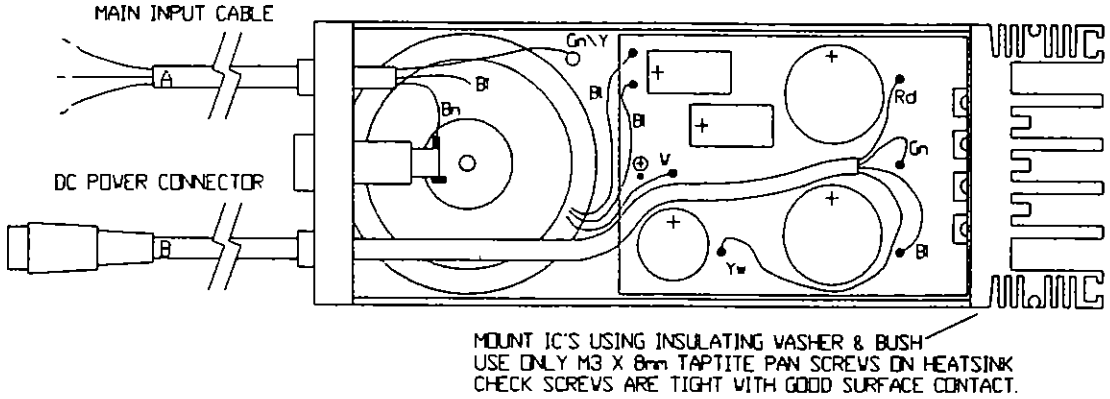

MOUNT IC'S USING INSULATING WASHER & BUSH
USE ONLY M3 X 8mm TAPTITE PAN SCREWS ON HEATSINK
CHECK SCREWS ARE TIGHT WITH GOOD SURFACE CONTACT.

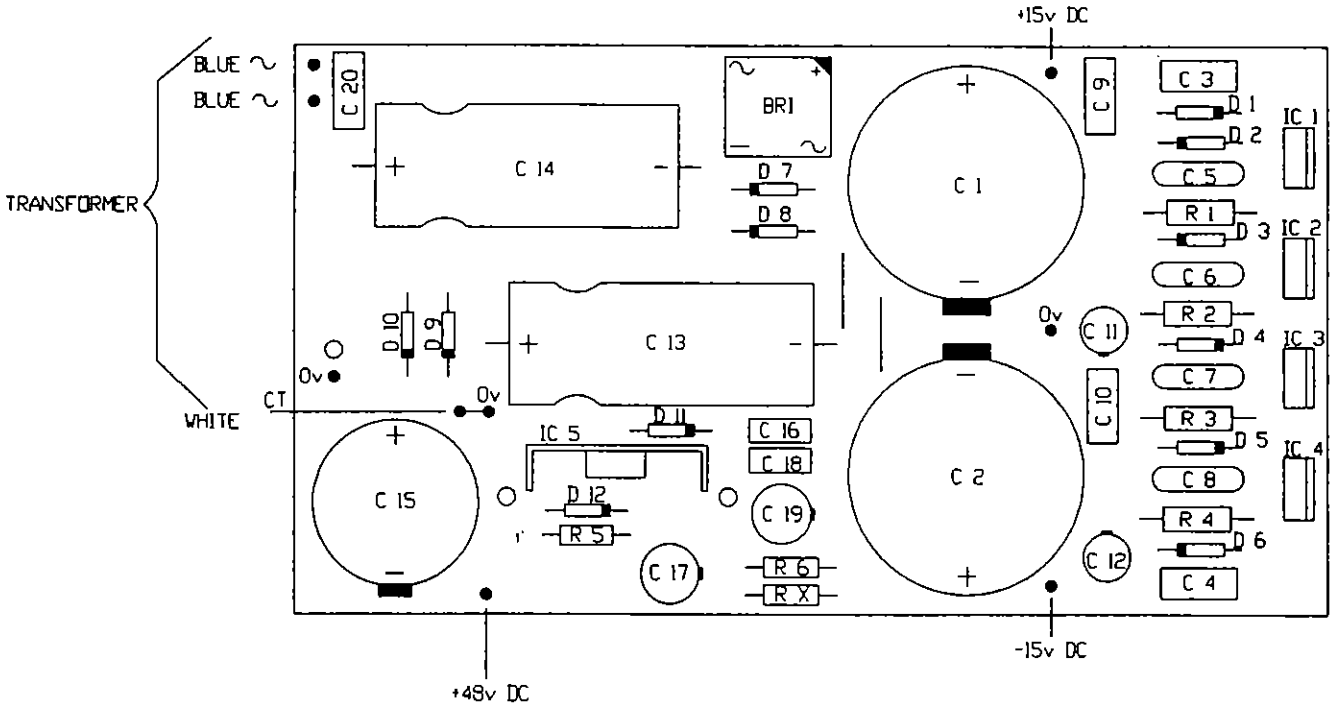

MPS9 PCB AG0114 ISSUE.4
COMPONENT OVERLAY

DANGER - HIGH VOLTAGE !

DISCONNECT POWER BEFORE REMOVING COVER
REFER SERVICE WORK TO QUALIFIED SERVICE PERSONNEL ONLY

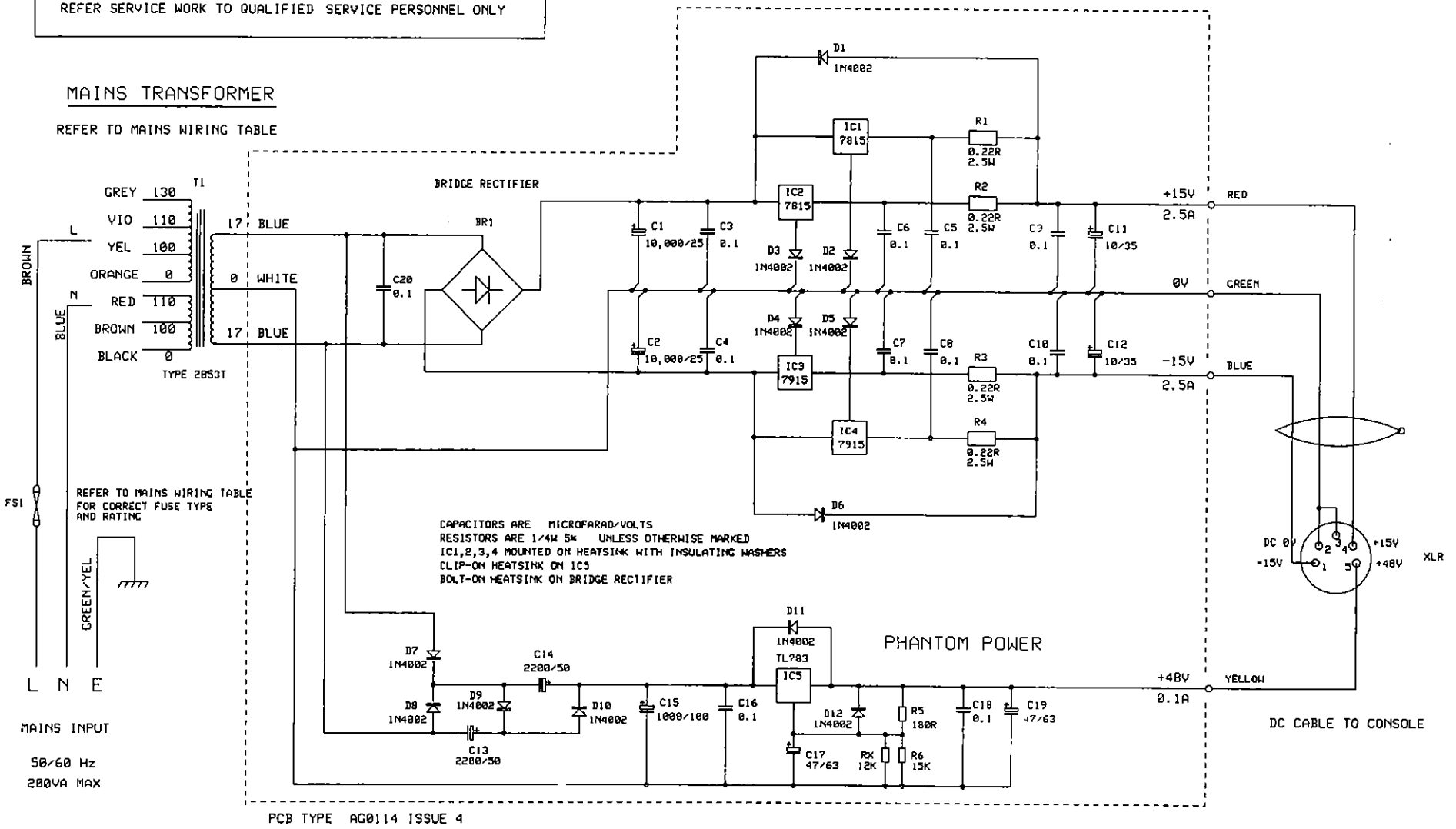

ISS.	REVISION	BY DATE
1	REDRAWN FROM MBD122 ISS.5	CD 29-9-92

UNIT TITLE: MPS9 POWER SUPPLY

DRAWING TITLE: CIRCUIT DIAGRAM

MANUFACTURED IN ENGLAND BY
ALLEN & HEATH

DRAWING No. D197 ISSUE 1

The following options are covered in this section:

INDIVIDUAL PHANTOM POWER DISABLE
MULTITRACK HI LEVEL OPTION
FITTING THE GS3-X8 EXPANDER
FITTING THE GS3V-X8 EXPANDER
FOOTSWITCH OPTIONS
SMPTE MODULE OPTION
GS3 V5 VCA AUTOMATION UPGRADE
FITTING THE MULTITRACK BALANCED OPTION

To change these option settings; you need to disconnect the console, remove the base and access the internal circuit assemblies. Please read the section : SERVICE PROCEDURES for general precautions and how to remove the base.

NOTE: ONLY TECHNICALLY COMPETENT SERVICE PERSONNEL SHOULD CARRY OUT THIS WORK.

PHANTOM POWER DISABLE

Phantom power +48V DC may be switched as required to the MIC INPUT XLR using the front panel +48V switch. To disable this switch and make the input XLR "safe" you may cut out link J1 on the I/O channel printed circuit assembly. Do this only if absolutely necessary. Note that most dynamic and non-powered microphones will not be damaged by inadvertently pressing +48V as long as they are operating in balanced mode. Check that the mic cables are correctly wired for balanced operation.

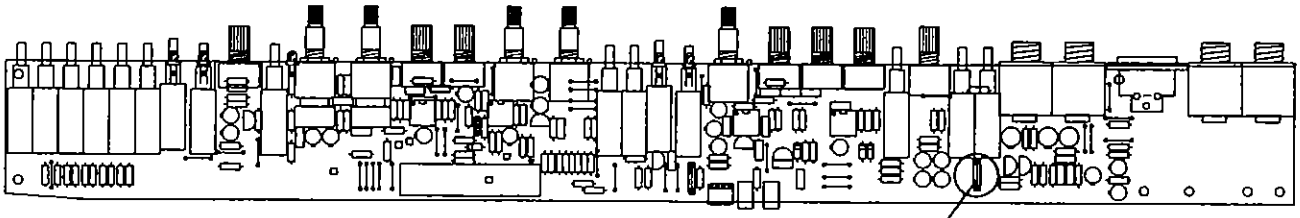

PHANTOM POWER OPTION

LOCATING THE COMPONENTS

The GRP/DIR OUTPUT level option is positioned next to IC4 beneath the main console IDC connector harness. The TAPE IN level option link is positioned next to R44 near the SLAVE PCB 4 way connector.

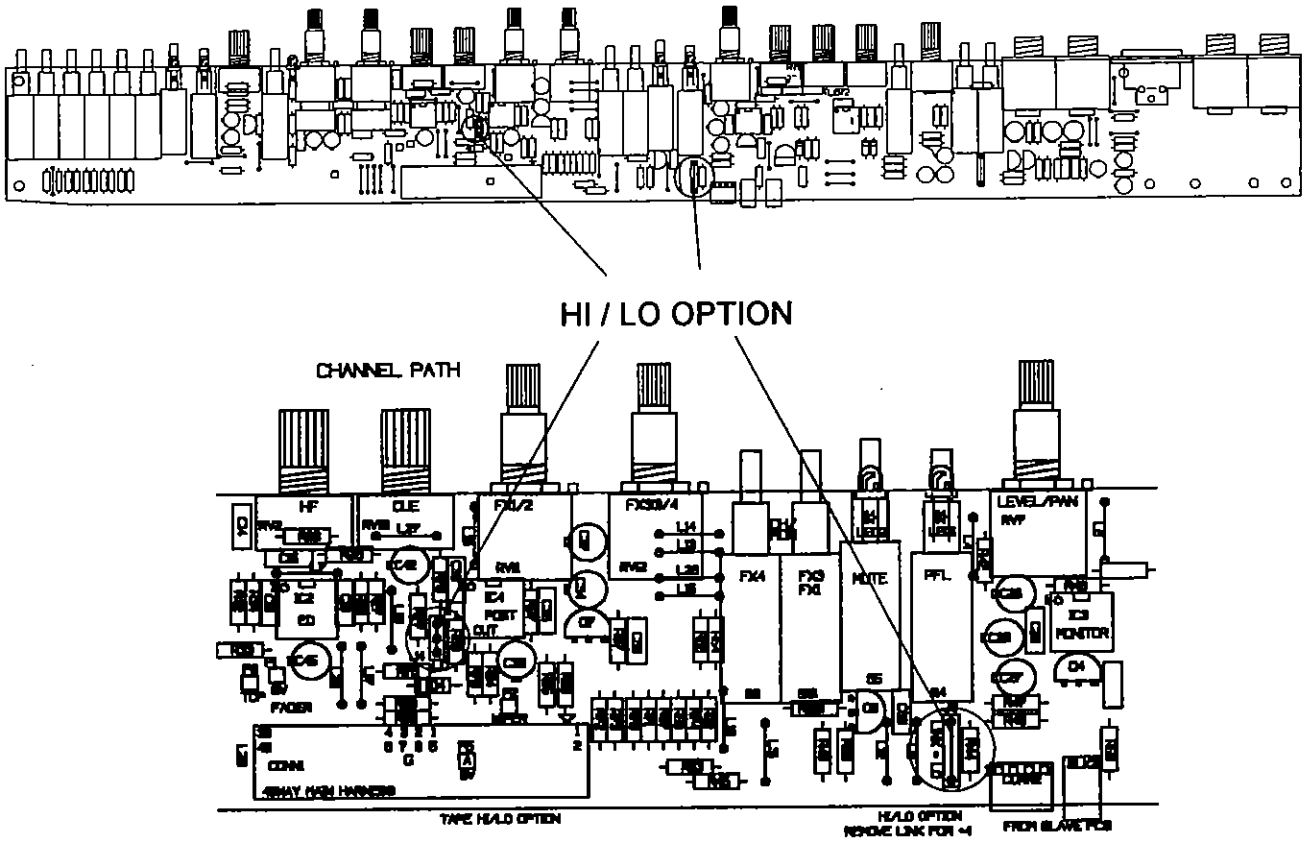

GIR/DIR OUT LEVEL SETTING:

For HI LEVEL (+4dBu) resolder link J4 between the centre hole and the hole nearest the potentiometer edge.

For LO LEVEL (-10dBV) solder the link between the centre and connector edge holes.

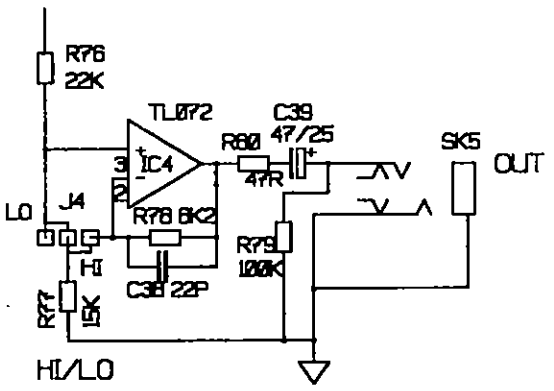

TAPE IN LEVEL SETTING:

For HI LEVEL cut out link J3

For LO LEVEL fit link J3.

This link sets the PFL sensitivity from the MONITOR signal path input.

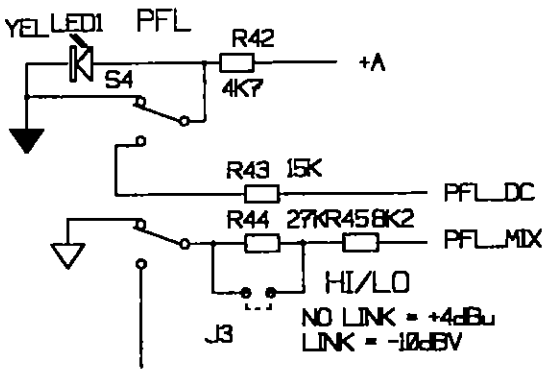

HI LEVEL MULTITRACK OPTION

This console is factory preset for operation with standard low level (316mV, -10dBV) multitrack tape machines. It may be internally reconfigured for operation with high level (+4dBu) multitrack machines.

Two link changes are required on each of the I/O channel printed circuit assemblies which connect to your multitrack. This sets the console **GRP/DIR OUTPUT** and **MONITOR PFL (TAPE IN)** sensitivity for high level.

This option is shown in the console **BLOCK DIAGRAM D112** sheet 1, and I/O circuit diagram **D113** and component layout **FW030D**. The relevant parts of these are shown on the facing page.

NOTE: Access is required to the internal assemblies of the console. Circuit board links need to be cut or resoldered in alternative positions.

ONLY TECHNICALLY COMPETENT SERVICE PERSONNEL SHOULD CARRY OUT THIS WORK.

PROCEDURE:

1. Disconnect the power supply and all cables from the console.
2. Place the console upside down on a suitable flat surface.

PRECAUTIONS: Make sure that your work surface is free of dirt and debris which may damage the control knob finish. Avoid balancing the console on one of its corners as this may damage the trim.

3. Remove the front, rear and side base screws using a 2-point pozi (crosshead) screwdriver. Lift off the base. It may be necessary to prize up the rear of the base using a small flat screwdriver.

4. Locate I/O channel option links J3 & J4 and cut/resolder these as required. Details are shown opposite. You may need to unplug the main 40 way IDC connector harness first.

5. Check the accuracy of your work and carefully align and replace the IDC connector harness. Remove all solder debris etc.

6. Refit the base. Note the correct orientation of the foam strips which should line up with the SLAVE assembly positions.

7. Reconnect the power and cables and test for correct operation.

OPERATIONAL MODE: The channel GAIN (when in REV mode), and monitor LEVEL (when in normal mode) control settings need to be readjusted to match the multitrack. Use PFL to optimise the gain matching.

EXPANDER SIDE VIEW

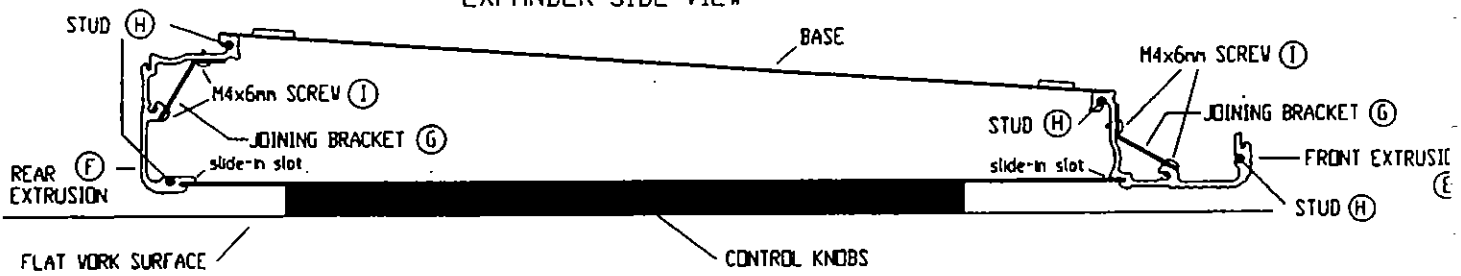

JOINING THE BASES

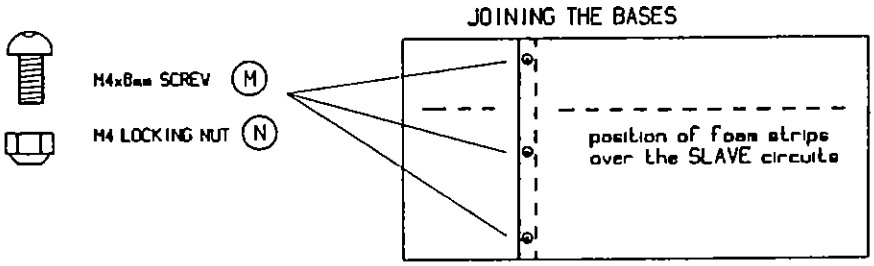

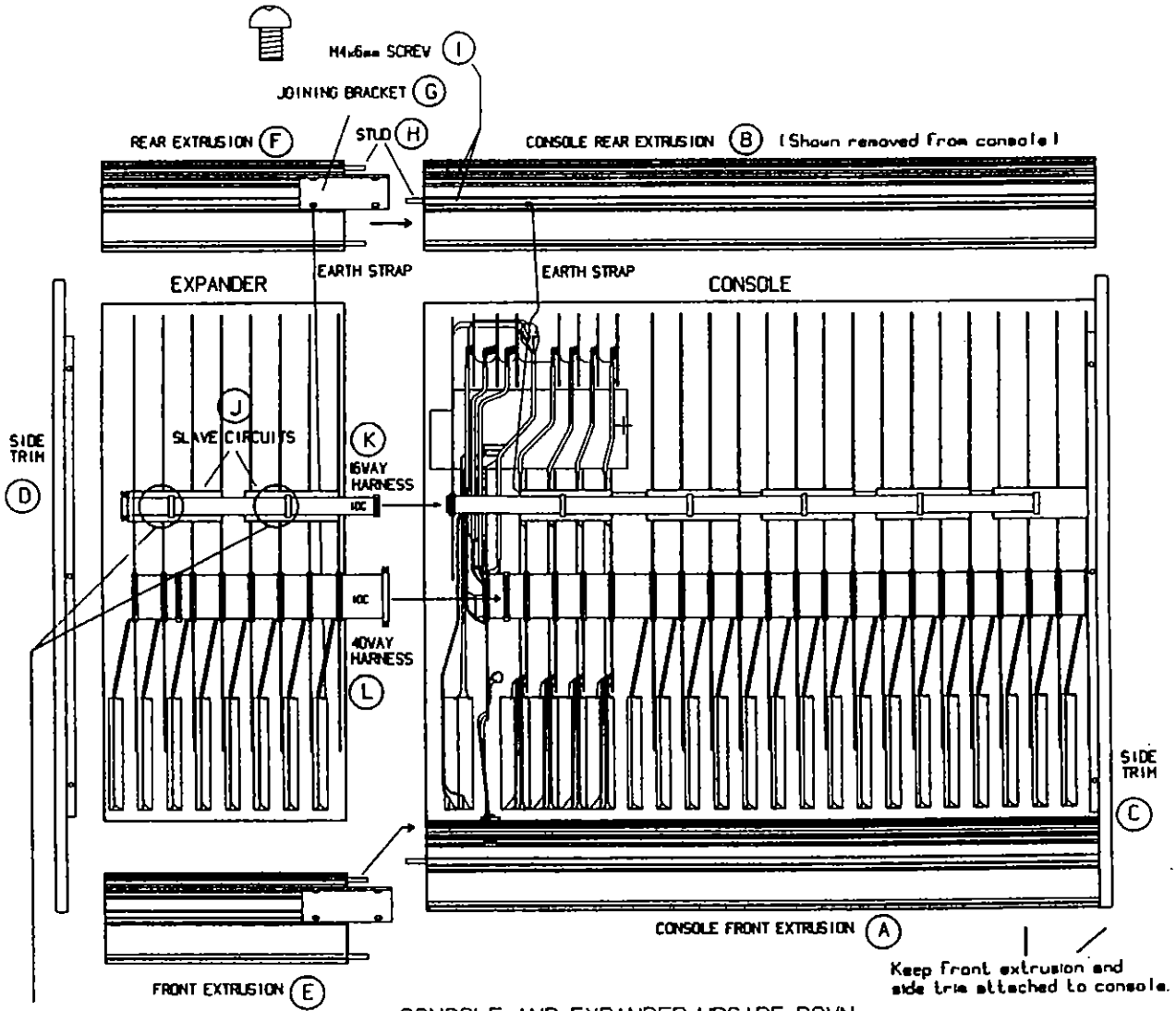

CONSOLE AND EXPANDER UPSIDE DOWN

EXPANDER ASSIGNMENT

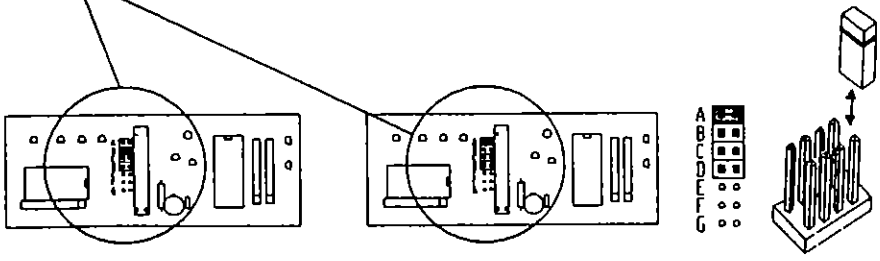

For CH17 to 20 fit link A
For CH21 to 24 fit link B
For CH25 to 28 fit link C
For CH29 to 32 fit link D

GS3-X8 CHANNEL EXPANDER OPTION

The GS3-X8 expander adds a further eight IO (Input/output) channels to your GS3 console. This unit fixes on to the right hand side of the console to expand a GS3-16 console to 24 or 32 channels (one or two expander units), or a GS3-24 console to 32 channels. Note that you may not expand beyond 32 channels.

The expander IO channels are identical to your console IO channels and enables you to work with a 24 (or 32) track multitrack tape machine, or simply give you more mix inputs. A 24 channel GS3 offers 52 inputs to the stereo mix, and a 32 channel GS3 68 inputs.

Fitting the expander unit requires that you unplug your console, place it upside down on a suitable flat working surface, partly disassemble it to reposition the right hand side trim and attach the front and rear chassis extrusion extenders, plug on the expander IDC harnesses, check the expander assignment links, and re-assemble the expanded console. The expander is supplied with these instructions and a full kit of parts for joining the unit to your console.

PRECAUTION: This work requires part disassembly of your console. Take care to avoid damage to the internal assemblies, connector harnesses, cosmetics and external paint finish. If necessary refer this work to your service agent. Please follow the procedure detailed below and note the precautions highlighted.

UNPACKING THE EXPANDER: Your expander has been packed to avoid damage during transit. Please retain the packing if you intend to ship this unit separately in the future. A side TRANSIT BRACKET is fitted. **Do not remove** this until indicated in the procedure below. Check the contents before proceding:

1x GS3-X8 console expander with fitted:

1x	AA1148	Side transit bar,
1x	AP0135	Expander Instructions
1x	AP0133	Packing sheet
1x	orange QA STAGE CARD	

1x EXPANDER HARDWARE KIT containing:

2x	AA1142	Joining brackets
1x	AT0033	4mm Hex key
1x	AT0002	2-point crosshead screwdriver
6x	AB0325	S3 X8 M6 joining studs
8x	AB0272	M4 x 6mm taptite screws
3x	AB0313	M4 x 8mm screws
1x	AN0340	Number sheet 25-32 set

GS3V-X8 CHANNEL EXPANDER OPTION

The GS3V-X8 expander adds a further 8 IO (input/output) channels to your GS3V console. This unit fixes onto the right hand side of your console.

Fitting the expander unit requires that you unplug your console, place it upside down on a suitable flat working surface, partly disassemble it to reposition the right hand side trim and attach the front and rear chassis extrusion extenders, plug on the expander IDC harnesses, check the expander assignment links, and re-assemble the expanded console. The expander is supplied with these instructions and a full kit of parts for joining the unit to your console.

You will require the following hand tools to enable you to expand your console:

- a No:2 crosspoint screwdriver, an 8.0mm and a 2.0mm slot screwdriver.

PRECAUTION: This work requires part disassembly of your console. Take care to avoid damage to the internal assemblies, connector harnesses, cosmetics and external paint finish. If necessary refer this work to your service agent. Please follow the procedure detailed below and note the precautions highlighted.

UNPACKING THE EXPANDER Your expander has been packed to avoid damage during transit. Please retain the packing if you intend to ship this unit separately in the future. A side TRANSIT BRACKET is fitted. **Do not remove** this until indicated in the procedure below. Check the contents before proceeding:

PROCEDURE:

Please follow these instructions carefully and in the correct sequence:

1. Disconnect the power supply and all cables from the console.
2. Place your console upside down on a suitable flat work surface or level floor. This should be larger than the combined size of the console and expander(s).

PRECAUTIONS: Make sure that your work surface is clear of dirt and debris which may damage the control knobs and paint finish.

3. Remove the console right hand side trim (D) (your left with the console upside down). To do this first remove the large side trim hex screws.
4. Remove the rear base screws and the 3x rear left hand side trim hex screws to free the console rear extrusion (B). Carefully slide this away from the console ready for fixing on the rear expander extrusion (F). Be careful not to stretch the green wire earth strap that connects between this extrusion and the console.

PRECAUTION: Do not remove the console base or move the front extrusion (A). This is now held in place by the base and one side trim (C).

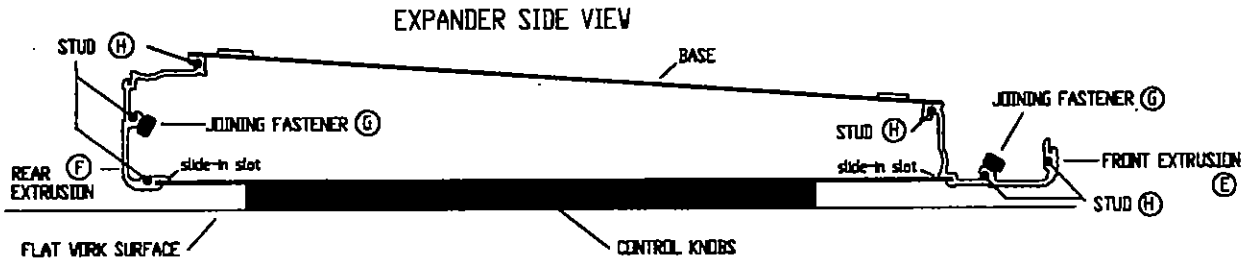

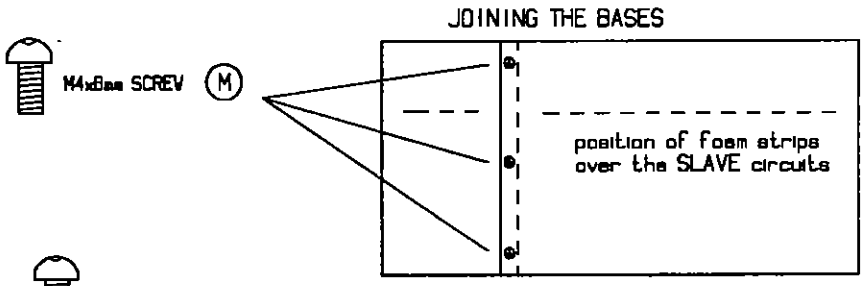

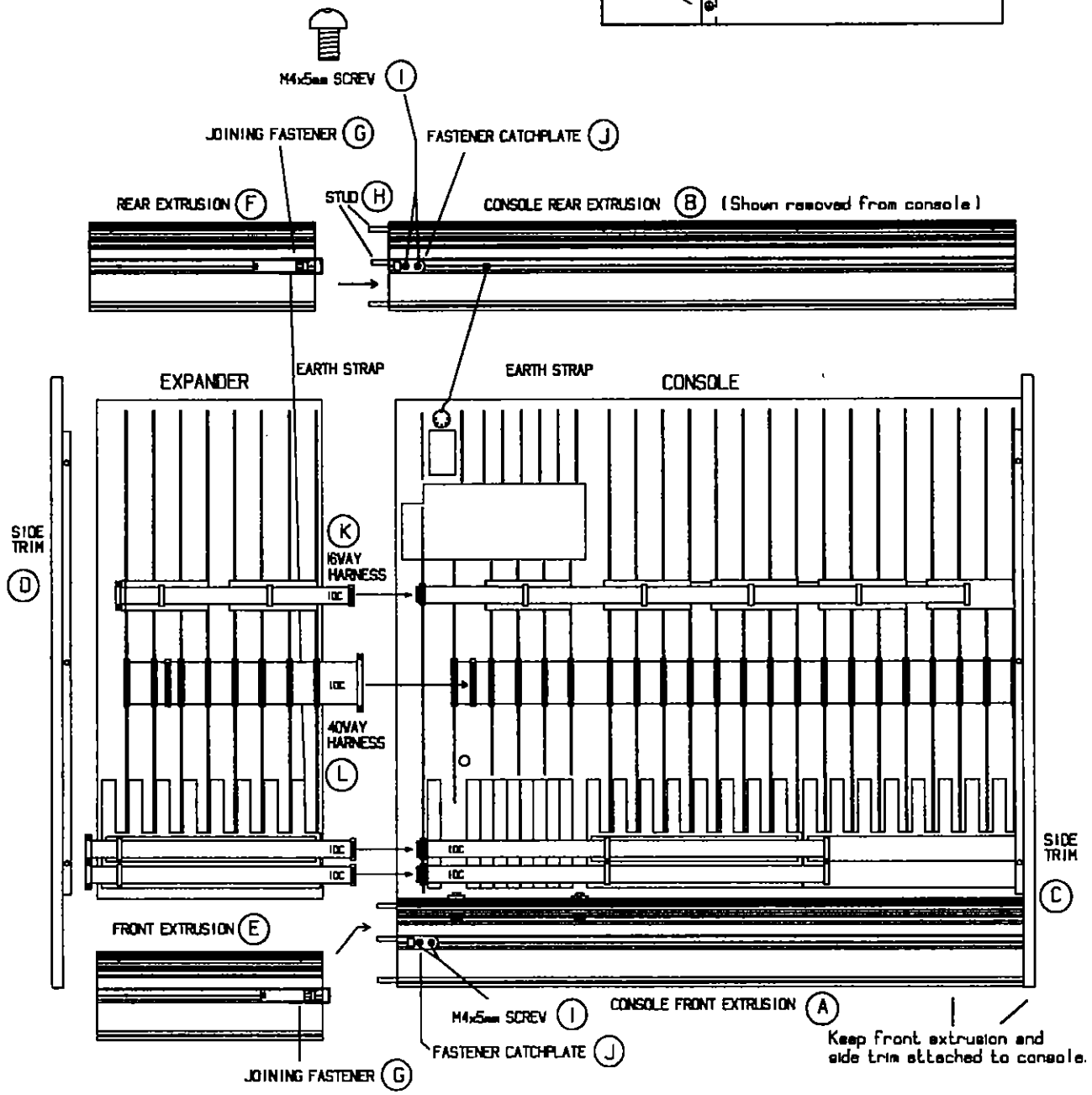

CONSOLE AND EXPANDER UPSIDE DOWN

5. Prepare the GS3V-X8 expander by placing it upside down to the left of your console. Carefully remove the expander base, transit bar, and front and rear extrusions (E and F). Be careful not to stretch the green wire earth strap that connects between the rear extrusion and the expander.

EXTENDING THE EXTRUSIONS:

6. Extend the console rear extrusion (B) by first screwing 3 of the M6 joining studs (H) into the extrusion holes to the depth of the stud thread. Now offer up the expander rear extrusion (F) and slide them together on the 3x studs.
7. Place the fastener coupling (G) over the catchplate and the screw in the fastener handle so that it snaps closed when fully seated.
8. Extend the console front extrusion (A) using the same method as in 6. and 7.

PRECAUTION: Be careful not to pull the console front extrusion (A) off the panel assembly.

ATTACHING THE EXPANDER:

9. Position the expander front panel next to the console panel and slide it forwards into the expanded front extrusion slot.
10. Offer up the expanded rear extrusion so that the console and expander front panels are positioned in the extrusion slot, and the console base screw holes align with the extrusion holes. Screw in one rear base screw to hold it in place.

PRECAUTION: Be careful not to trap the green earth strap wires.

11. Screw in the rear hex screws to secure the console left hand side trim (C).
12. Refit the console right hand trim (D) on to the expander.
13. At this point check that the front panels, side trims, and front/rear extrusions are correctly aligned and in place.

PLUGGING ON THE EXPANDER HARNESSES:

14. Remove the main console base front, rear and side screws. Lift off the base.
15. Plug the expander 40way IDC harness (L) on to the male plug on the console 40way harness.
16. Plug the 3 expander 16way IDC harnesses (K) on to the 16way male plugs on the Keyboard circuit assembly (GS3V-16), or the floating male plugs (GS3V-24).

PRECAUTION: Make sure that the connectors are correctly aligned and pressed on.

FIGURE 2: EXPANDER ASSIGNMENT

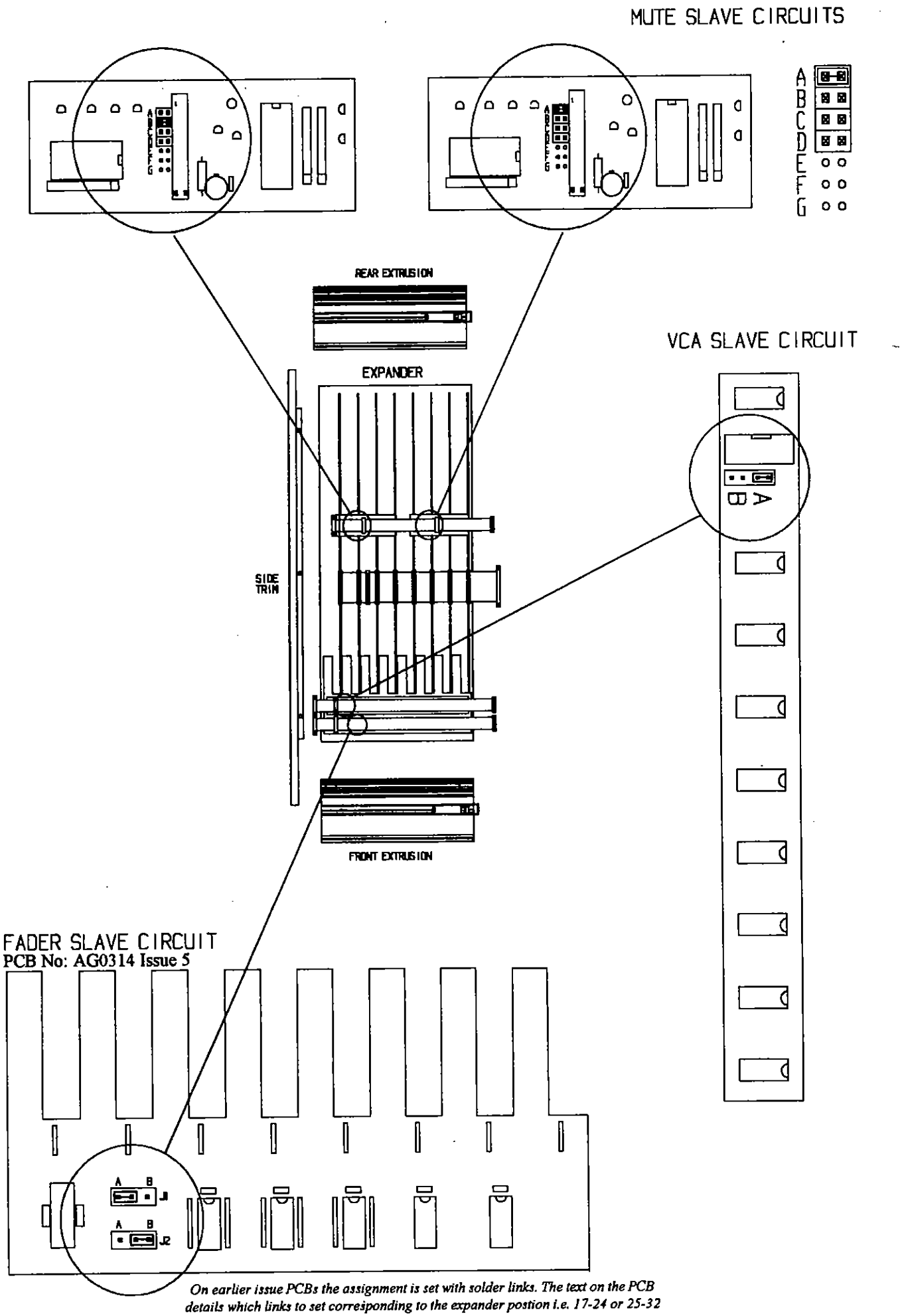

On earlier issue PCBs the assignment is set with solder links. The text on the PCB details which links to set corresponding to the expander postion i.e. 17-24 or 25-32

CHECKING THE EXPANDER ASSIGNMENT:

17. Your expander is supplied assigned as channels 17 to 24. If you are expanding from 24 channels you need to re-assign for channels 25 to 32. Please refer to Figure 2.

a) Reposition one link on each of the two expander Mute Slave Circuit boards as follows:

For channels 17 to 20 fit link A

For channels 21 to 24 fit link B

For channels 25 to 28 fit link C

For channels 29 to 32 fit link D

b) Reposition one link on the VCA Slave Circuit boards as follows:

For channels 17 to 24 fit link A

For channels 25 to 32 fit link B

c) Reposition two links on the Fader Slave Circuit board as follows:

For channels 17 to 24, link J1 to A and link J2 to B

For channels 25 to 32, link J1 to B and link J2 to A

EXTENDING AND REFITTING THE BASE:

18. Check your work and remove any dirt or debris from within the console.
19. Join the console base to the expander base using the 3x M4x8mm screws (M) provided. Make sure that the bases are correctly aligned with the foam strips on the same side.
20. Refit the expanded base making sure that the foam strips align with the position of the SLAVE circuit assemblies. Tighten the base screws.

CHECKING THE CONSOLE:

22. Position the console correct side up and plug in the power and signal leads. Test for correct console operation. If Peel off and stick on the numbers 25-32 if applicable.

Your console is now ready for use.

FOOTSWITCH OPTIONS

The Mute Automation footswitch input linked to the LEARN (function) key F7 is factory preset for operation with a standard momentary push-to-make footswitch as is common throughout the music industry. The following information is provided to allow you to use a push-to-break footswitch, or link the system to some other logic control system. Note that it may be necessary to use a 3-pole (stereo) jack plug.

TECHNICAL DESCRIPTION: The console footswitch input is opto-isolated to prevent problems with equipment interaction, or circuit damage through severe misuse. The footswitch switches a DC voltage to the driver LED in the opto-isolator. Link option J3 determines whether this voltage is derived internally or externally. The 3-pole connector may be used in several ways for different switching configurations:

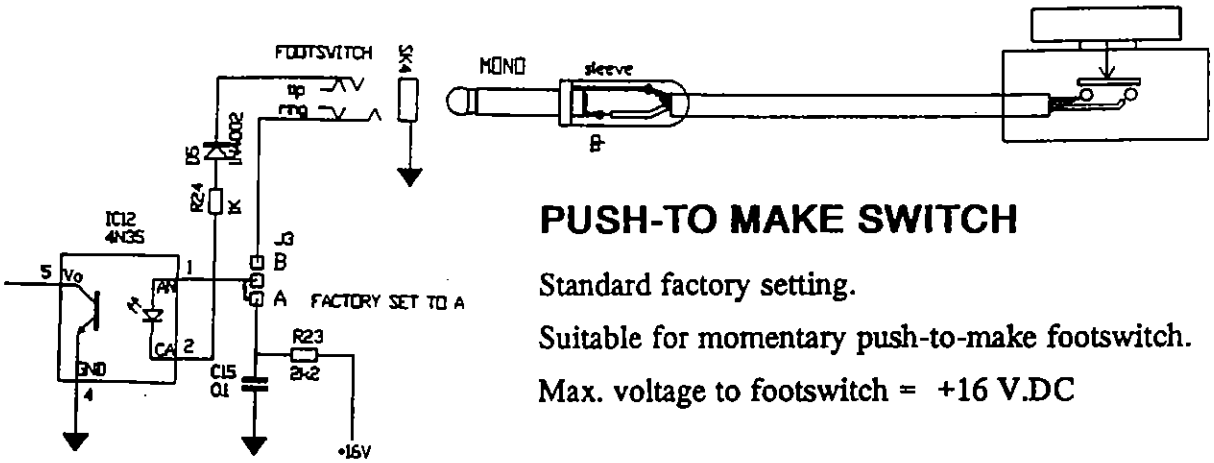

PUSH-TO MAKE SWITCH

Standard factory setting.

Suitable for momentary push-to-make footswitch.

Max. voltage to footswitch = +16 V.DC

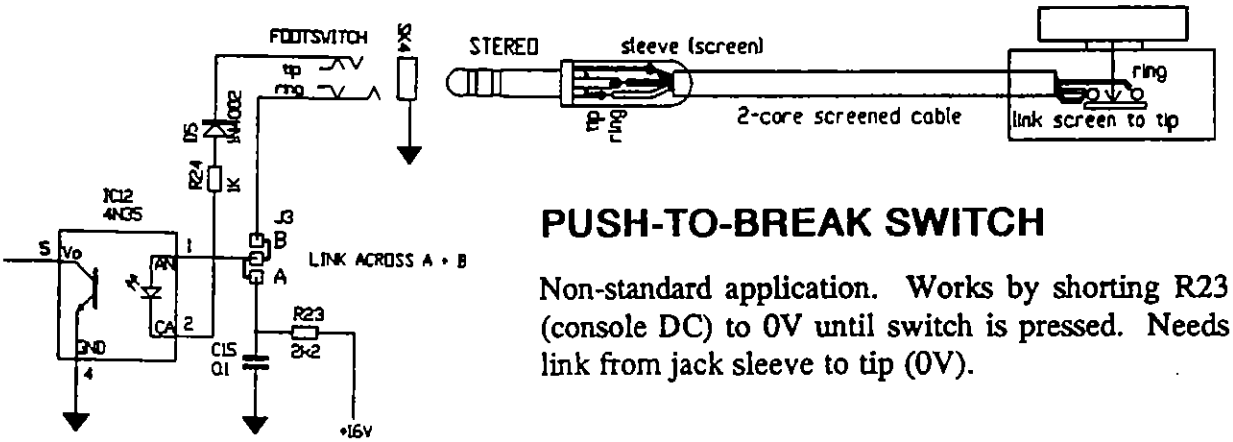

PUSH-TO-BREAK SWITCH

Non-standard application. Works by shorting R23 (console DC) to 0V until switch is pressed. Needs link from jack sleeve to tip (0V).

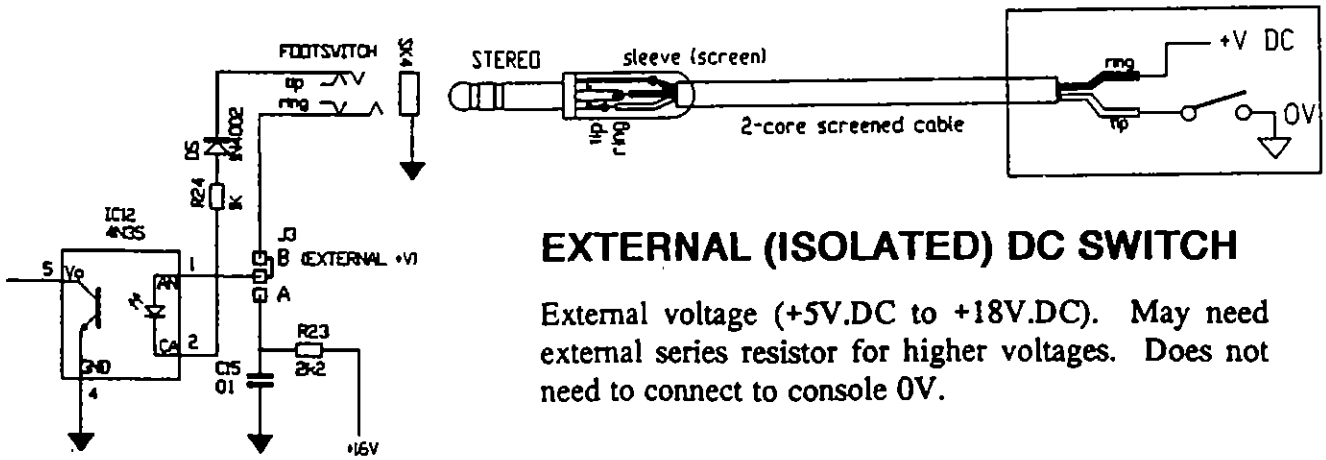

EXTERNAL (ISOLATED) DC SWITCH

External voltage (+5V.DC to +18V.DC). May need external series resistor for higher voltages. Does not need to connect to console 0V.

NOTE: Please see Technical Bulletin GS3V_01 at the beginning of Section C in this manual for details regarding Footswitch wiring of pre-production GS3V consoles.

SMPTE OPTION

INSTRUCTIONS FOR FITTING THE SMPTE MODULE

The SMPTE module PCB is easy to install and only requires a No: 1 crosspoint screwdriver.

All the other parts necessary for installation are supplied in this pack.

The SMPTE PCB is fitted next to the V-PROM PCB in the compartment beneath the V-PROM cover plate. There is a self adhesive label identifying the compartment and the current software version number.

During installation of the SMPTE PCB check the Software Version number on the V-PROM PCB and replace the EPROM if necessary. Follow the procedure for replacing the EPROM in the GS3V.

Before commencing; **remember to disconnect the power from your console**

then follow the procedure below:

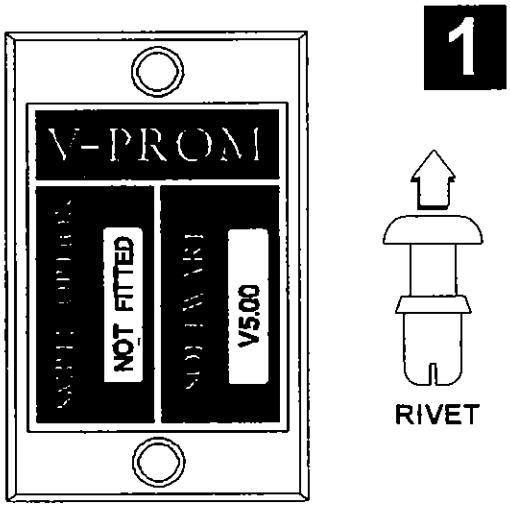

Remove the 2 plastic snap rivets securing the **V-PROM** cover plate to the console front panel. Remove the self adhesive V-PROM label and carefully put to one side.

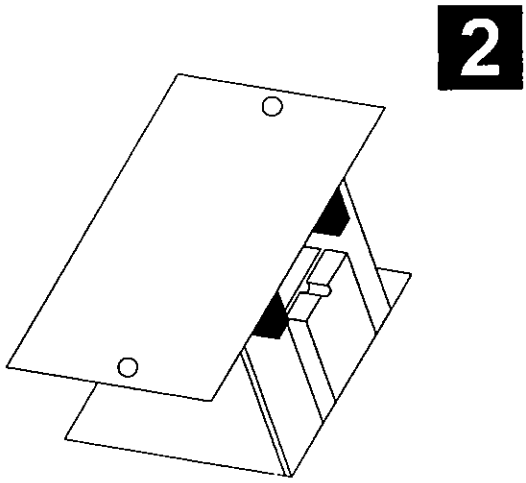

Carefully ease the **V-PROM** module from the console. Take care not to damage the harness connected to the module.

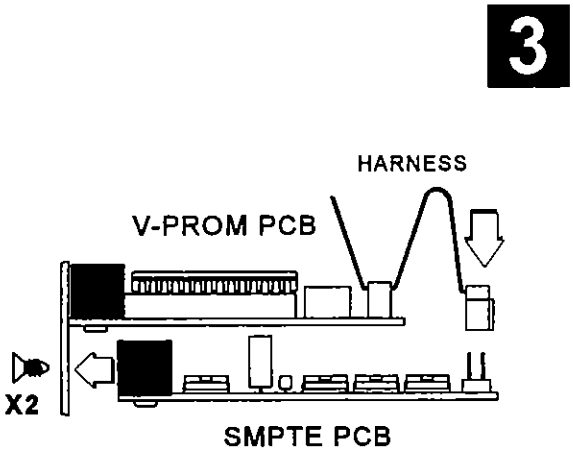

Fix the SMPTE PCB assembly to the coverplate using the two screws supplied. Plug on the connector and check that there is no misalignment.

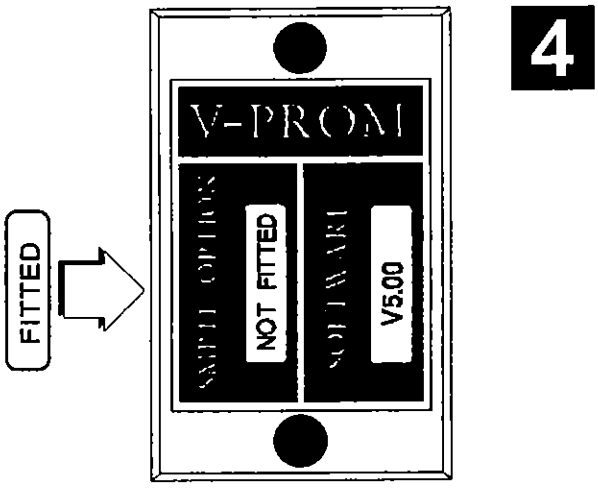

Refit the assembly into the V-PROM compartment and replace the V-PROM label. Place the "FITTED" label over the "NOT FITTED" text on the V-PROM label.

INITIAL SYSTEM CHECK

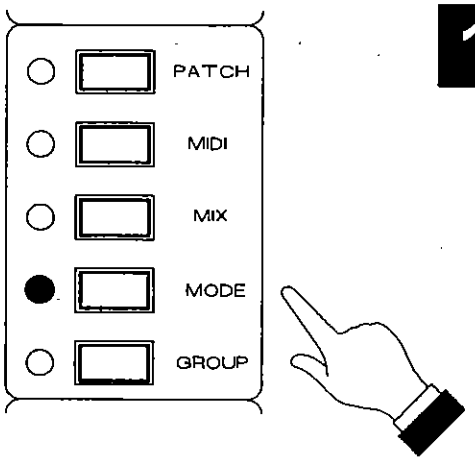

To check that the SMPTE module has been installed correctly, press the **MODE** switch on the console. The LED will light to confirm the selection.

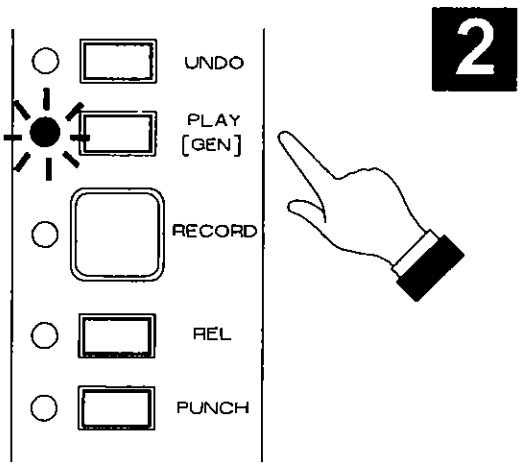

Then press the **PLAY** switch, the LED will flash to confirm the selection. The SMPTE module will be generating time code from the SMPTE IN/OUT socket.

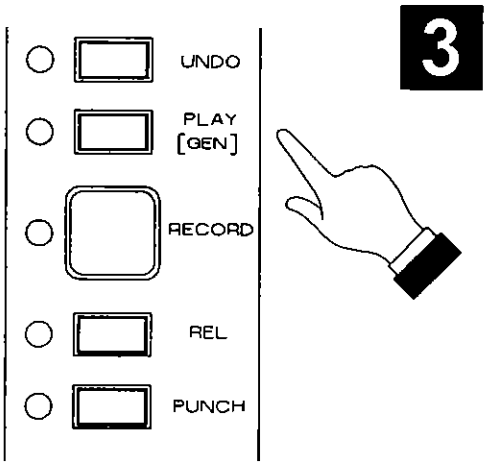

Press the **PLAY** switch again, the play LED will extinguish.

This test checks that the console's internal computer recognizes the SMPTE module.

If the console fails to respond as described, please refer to the **Troubleshooting** section.

SETTING THE GENERATOR OUTPUT OPERATING LEVEL

The SMPTE module is factory set to output time code at a low level (-16dBV) in common with most multitrack tape machines operating at low level (-10dBV) with unbalanced inputs and outputs. If you are using a multitrack tape machine that operates at high level (+4dBu) and wish to stripe the tape with a higher signal level, the output of the SMPTE generator can be increased (to -2dBu) by simply repositioning a jumper link on the SMPTE PCB. Follow the procedure below.

Before commencing; **remember to disconnect the power from your console.**

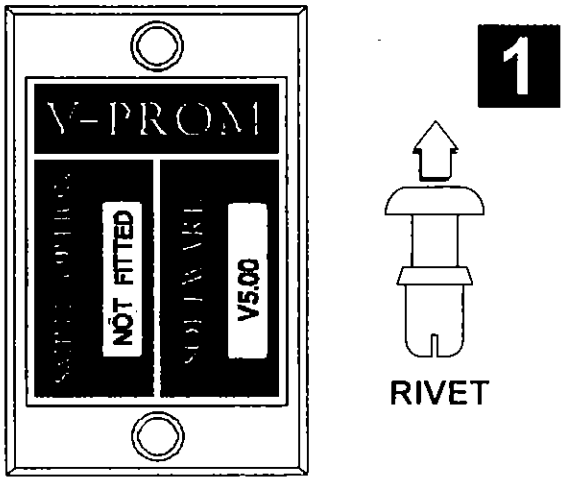

Remove the 2 plastic snap rivets securing the **V-PROM** cover plate to the console front panel.

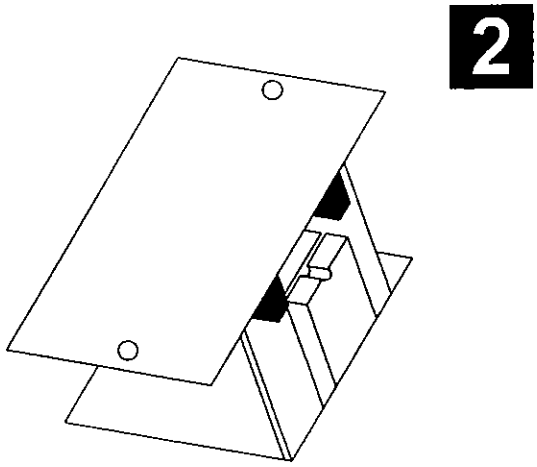

Carefully ease the **V-PROM** module from the console. Take care not to damage the harness connected to the module.

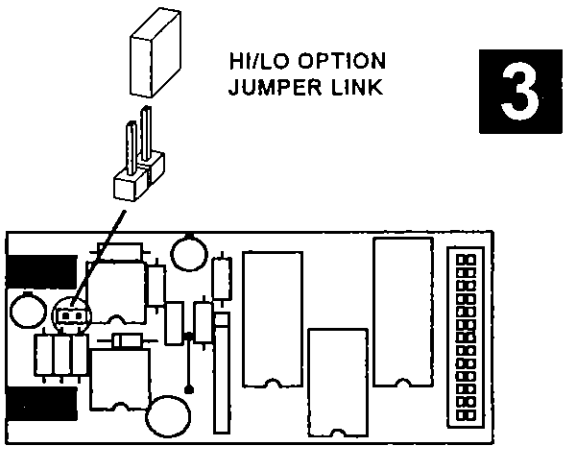

Place the jumper link over both pins on the SMPTE PCB to change the generator output from low level (-10dBV) to high level (+4dBu).

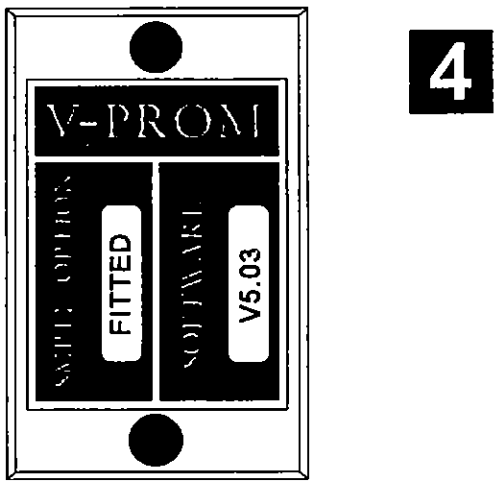

Refit the assembly into the V-PROM compartment and replace the rivets. Carry out the Initial System Check as in the GETTING STARTED section of this manual.

FITTING THE V_MICRO PCB GROUND LINK

The sleeve on the SMPTE IN/OUT jack socket is not connected to 0V. This presents no safety hazard as the console is connected to mains earth.

For the SMPTE module option to operate correctly you will need to connect at least one of the audio tape in/out leads between the console and tape machine.

If the earth sleeves have been lifted on the tape in/out connectors, (e.g. to prevent earth hum loop problems) you will have to provide the SMPTE module with an earth.

This is done by joining a solder link on the rear of the V-MICRO PCB (A&H PCB No: AG0330). To do this, follow the procedure below:

Before commencing; **remember to disconnect the power from your console.**

Note: the procedure below is for a GS3V 16 channel console. If you have a 24 channel console or larger then alter the procedure accordingly.

1

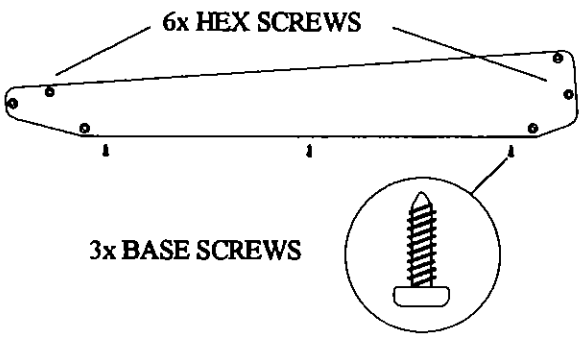

Remove the right hand side trim. Use a 2-point crosshead screwdriver to remove the three base side screws and a 4mm hex key to the six side trim screws.

2

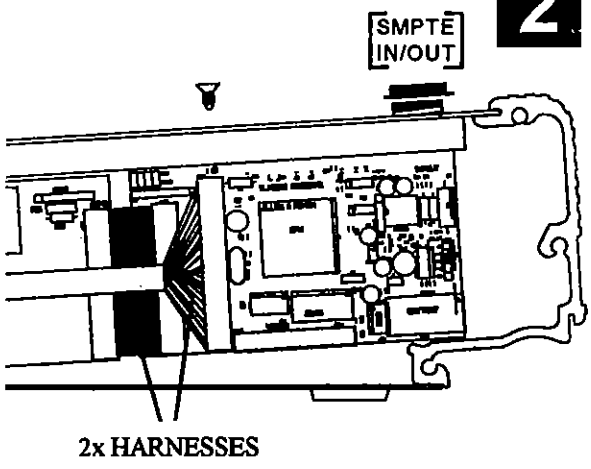

Carefully remove the two ribbon harnesses plugged onto the V-MICRO PCB. Then remove the nut on the SMPTE socket and joint block screw.

3

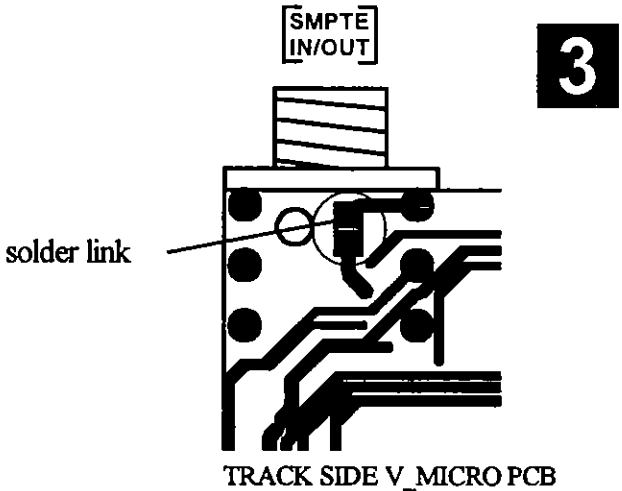

Drop the PCB down and place it track side up. Take care not to stress the harness or damage any of the components. Link the two pads with a solder blob.

4

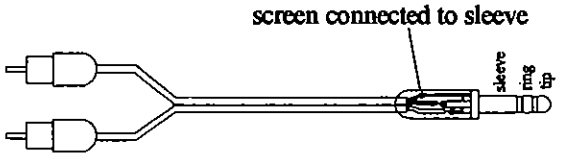

Refit the PCB and reassemble the console in reverse order. Check the screen on the SMPTE lead is connected at the console.

GS3 V5 VCA AUTOMATION UPGRADE

The GS3 V5 Upgrade kit allows you to add V5 VCA fader automation software to your GS3 console. V5 Automation software will give you the following advanced features:

- VCA fader & mute automation
- Mute & fader groups
- Solo-in-place
- 33 VCA and/or mute Patch memories
- Mute or VCA Channel isolation
- Comprehensive mix editing facilities
- Enhanced Function Keys
- Synchronisation to SMPTE, MTC & MIDI Clocks
- MTC Regenerator (for SMPTE Sync)

INSTALLATION

Please carefully read and understand these instructions before commencing any work. For reasons of clarity, the diagrams and text in this manual refer to the upgrade of a GS3-16 console. These instructions will apply to 24 and expanded 32 Channel GS3 consoles but differences in procedure should be noted.

The upgrade involves the following stages:

Stage 1:- dis-assembling the console.
Stage 2:- removing the Mute Processor PCB and faders.
Stage 3:- perform a gain modification to all Input Channels and Master PCBs.
Stage 4:- fitting new Micro, Keyboard, VCA & Fader PCBs.
Stage 5:- reassembling the console.

Precaution: This work requires partial disassembly of the console. Take care to avoid damage to the internal assemblies, connector harnesses, cosmetics and external paint finish. The work should be carried on a table as you will need to overhang the console to gain access the underside. Make sure that your work area is free of dirt and debris which may damage the console. Avoid balancing the console on one of its corners; if possible, enlist the help of a colleague when moving the console.

You will require the following hand tools to perform the upgrade:

- M6 hex key (supplied)
- M2.5 hex key (supplied)
- No.2 cross-point screwdriver.
- Soldering iron
- Solder braid or solder sucker.

Before proceeding, check the contents of the kit supplied against the packing sheet. If any components are missing, please contact your supplier.

IDENTIFICATION OF PARTS

Use the following table to identify the parts refered to in the upgrade procedure.

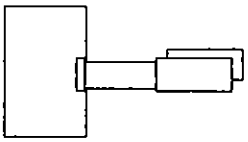

V-Micro PCB
AG0330
ZX000-246

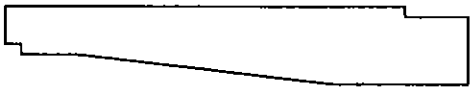

Keyboard PCB
AG0332
ZX000-240

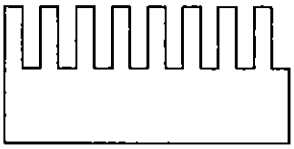

VCA Slave PCB
AG0314
ZX000-241



Channel VCA PCB
AG0315
ZX000-242

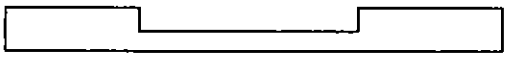

Upgrade Label
AN0384

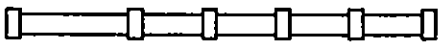

Mute Slave Harness
AL0551



VCA Slave Harness
AL0552

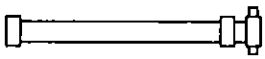

VCA Slave Expander Harness
AL0554
(not for GS3-16)

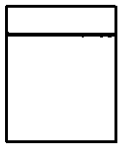

Upgrade Assembly Kit
ZX000-243

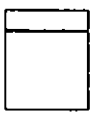

Bag1
M3x8mm button screws
M4 Hex Key
M2.5 Hex Key

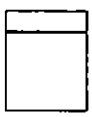

Bag2
M3x8mm screws
12KOhm Resistors

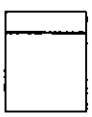

Bag3
Cable Ties
M3 Plastic Spacers



Bag4
M3x15mm pillar screws
22KOhm Resistors

PROCEDURE

Stage 1:- DIS-ASSEMBLING THE CONSOLE.

1. Remove the fader knobs from all of the Channel faders and right Master fader and put to one side. **Do not** remove the knobs from the group faders and left Master fader.
2. Locate the mute automation control section on the right hand side of the console, *see Fig. 1a*. Unscrew the footswitch jack socket nut (A) and the 3 countersunk screws (B). Retain 2 of the screws for later.

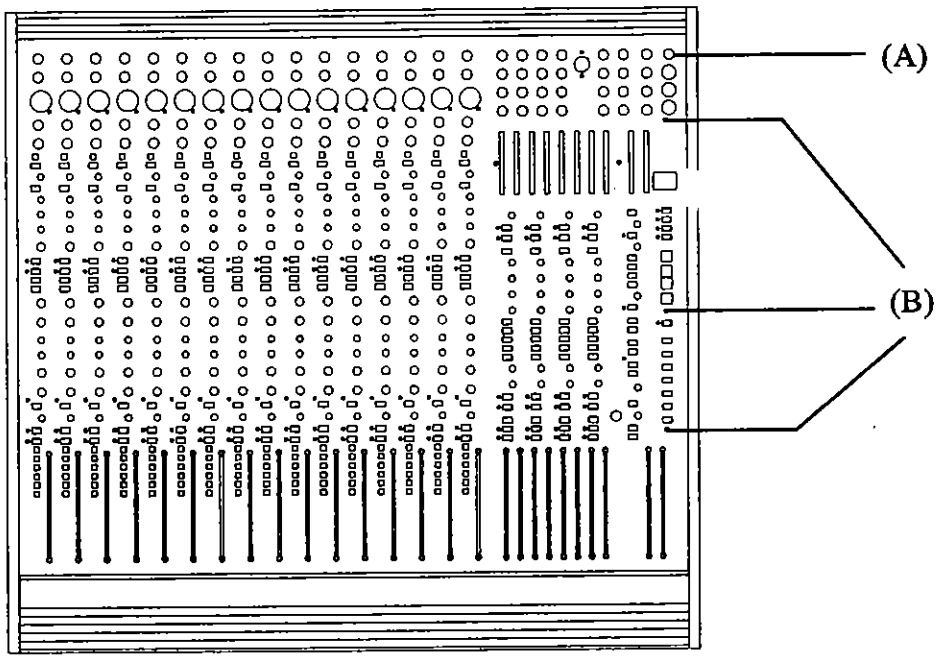

Fig. 1a.
Location of footswitch & screws.

3. Turn the console upside down. *see Fig. 1b*. Remove all of the base retaining screws (C). Lift the base clear of the console.
4. Unscrew the headphones socket, jack nut and washer (D) from the front extrusion (G) and move the jack socket clear of the extrusion.
5. Using the M6 hex key provided, remove the 6 hex screws holding the front extrusion to the side trims (E). Carefully lift the front extrusion clear of the console and place it to one side.
6. Remove the 3 hex screws (F) from the top of the left-hand side trim. Lift the side trim clear of the console and place it to one side.
7. Lift the rear extrusion (H) and right hand side trim just clear of the console.

Precaution: Do not strain the green earth wire connected to the rear extrusion.

8. Unscrew the green earth wire from the rear extrusion. Retain the screw for re-assembly. Lift the extrusion & side trim clear of the console.

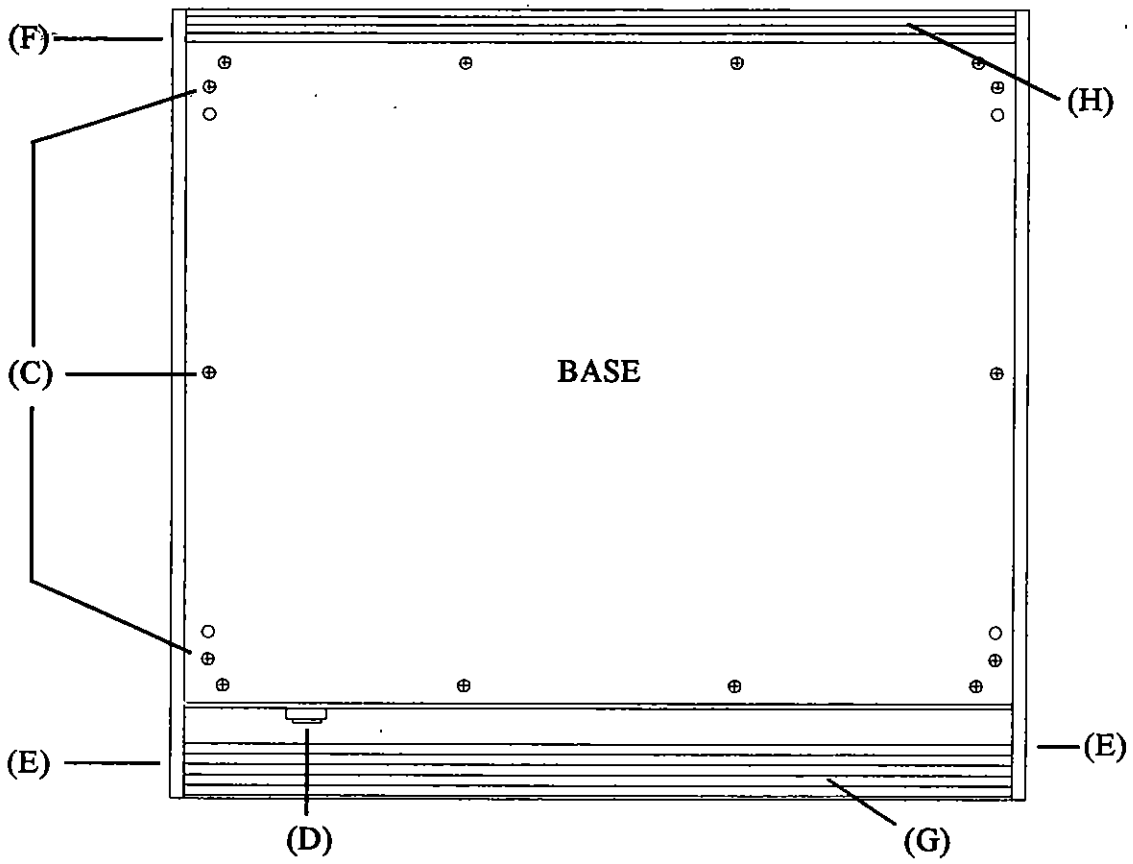

Fig. 1b.
Console inverted showing base,side trims & headphone socket.

Precaution: **In it's present state, do not lift the console by it's side edges so that it bows in the middle. This could stress the PCBs and potentiometers.**

NOTE: **For consoles expanded after manufacture.**

The expanded sections will not be joined to the main console section. It is advisable to disconnect the main 40 way ribbon harness and 16 way ribbon harness from the expander sections to prevent possible damage by over tensioning the harnesses.

Stage 2:- REMOVING THE MICRO PCB AND FADERS

1. Refer to *Fig. 2*. Remove the main ribbon harness (A). Remove the Mute Slave harness (B) by first cutting the cable ties holding the harness connectors to the Mute Slave PCBs. **Do not** cut the cable ties holding the Mute Slave PCBs to the Channel PCBs.

Precaution: Take care not to bend or distort the connector pins when removing the harnesses.

2. Locate the Red & Green wires from XLR power Input connector to the top of Mute Processor PCB (C). Carefully de-solder the Red & Green wires from the Mute Processor PCB. **Do not** desolder the wires from the XLR power connector. Lift the Mute Processor PCB clear of the console.

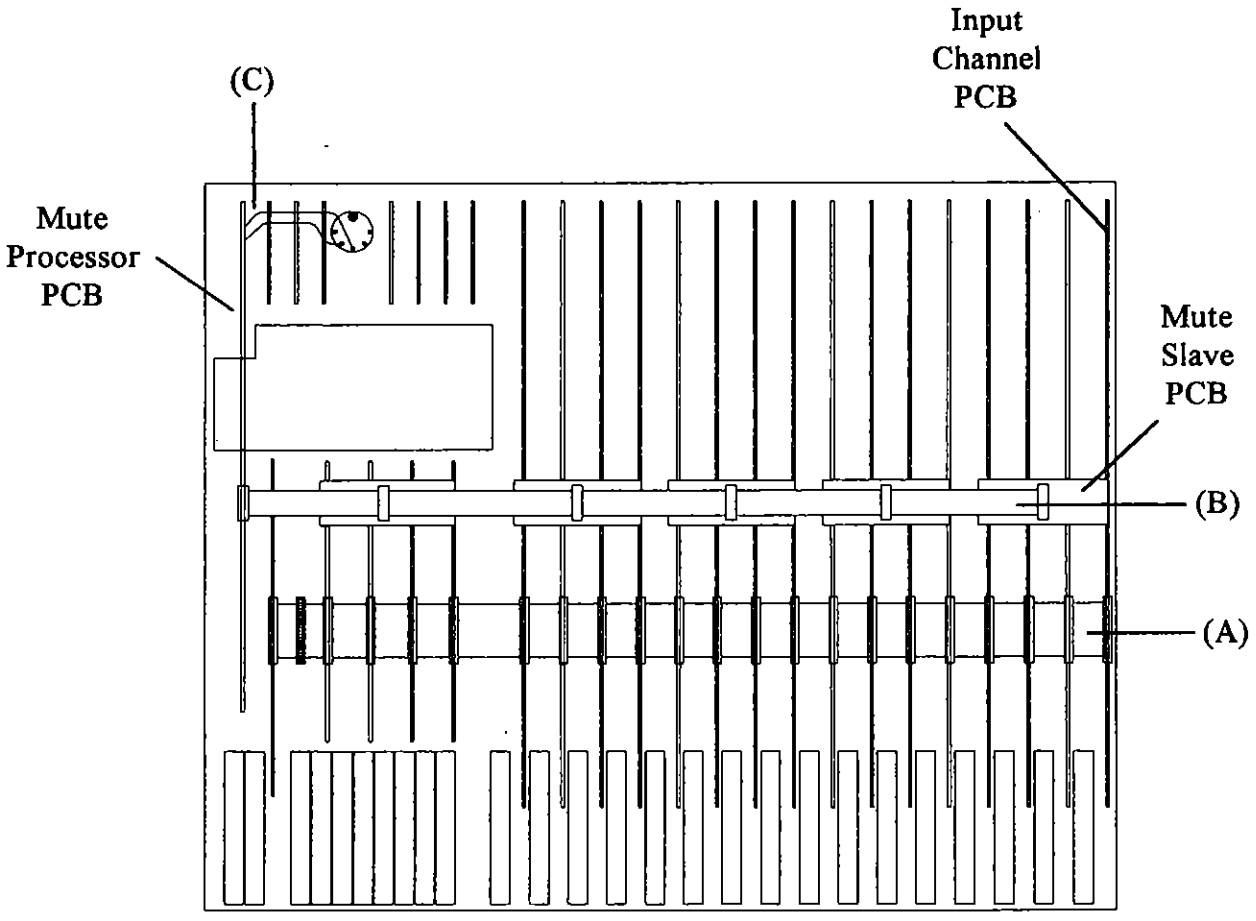

Fig. 2.
Console inverted with base & chassis removed.

3. De-solder the Red, Green & Blue fader wires from the Channel PCBs for every Input Channel (not Group faders). *see Fig. 3.* ***Do not*** de-solder the wires from the faders. Clean up the remaining solder from the PCB holes using suitable solder braid or solder sucker.

Precaution: Take care not to damage any PCB tracks or pads. Be careful not to burn or damage the Black group assignment wires soldered to the track side of each Channel PCB.

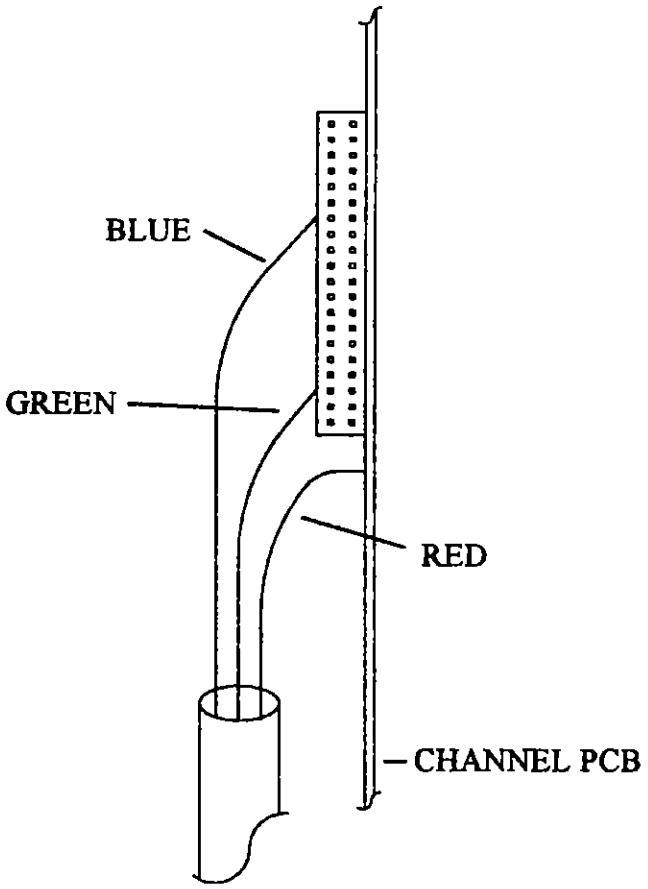

Fig. 3.
Fader wiring to Channel PCB.

4. Locate the right & left Master fader wires running from the master faders to the Master PCB (PCB No: AG0310), *see Fig. 4*. De-solder the screened red and blue wires from the faders and the PCB. Clean up the holes in the Master PCB using suitable solder braid or a solder sucker. Cut the cable tie that holds the wires to the front panel and remove the screened wires. Then unsolder the red and blue wires (A) that connect to the top of the right & left Master faders. **Do not** remove them as they will be required at a later stage.

5. Move the console so that the faders overhang the edge of your work surface, to gain access to the Channel fader mounting screws. Unscrew each Channel fader screw from beneath and remove all the Channel faders. Remove the right Master fader in a similar fashion. **Do not** remove the Group faders or the left Master fader. The screws, spacers and faders will no longer be required.

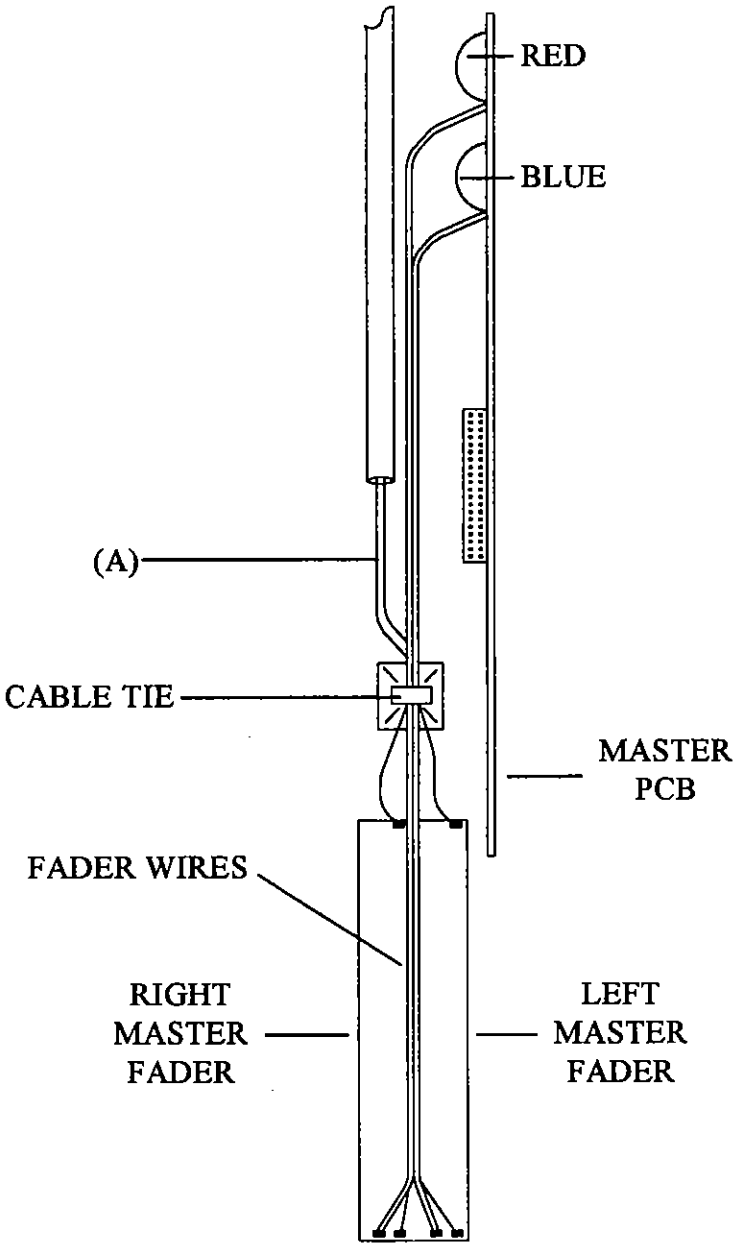

Fig. 4.
Fader wiring to Master PCB.

Stage 3:- PERFORM THE GAIN MODIFICATION

1. Locate the 47K resistor R97 on the Input Channel PCB, *see Fig. 5*. Solder a 22K resistor across R97, as shown, for every Input Channel PCB. Tin the resistor legs first and check your work to ensure good solder joints.

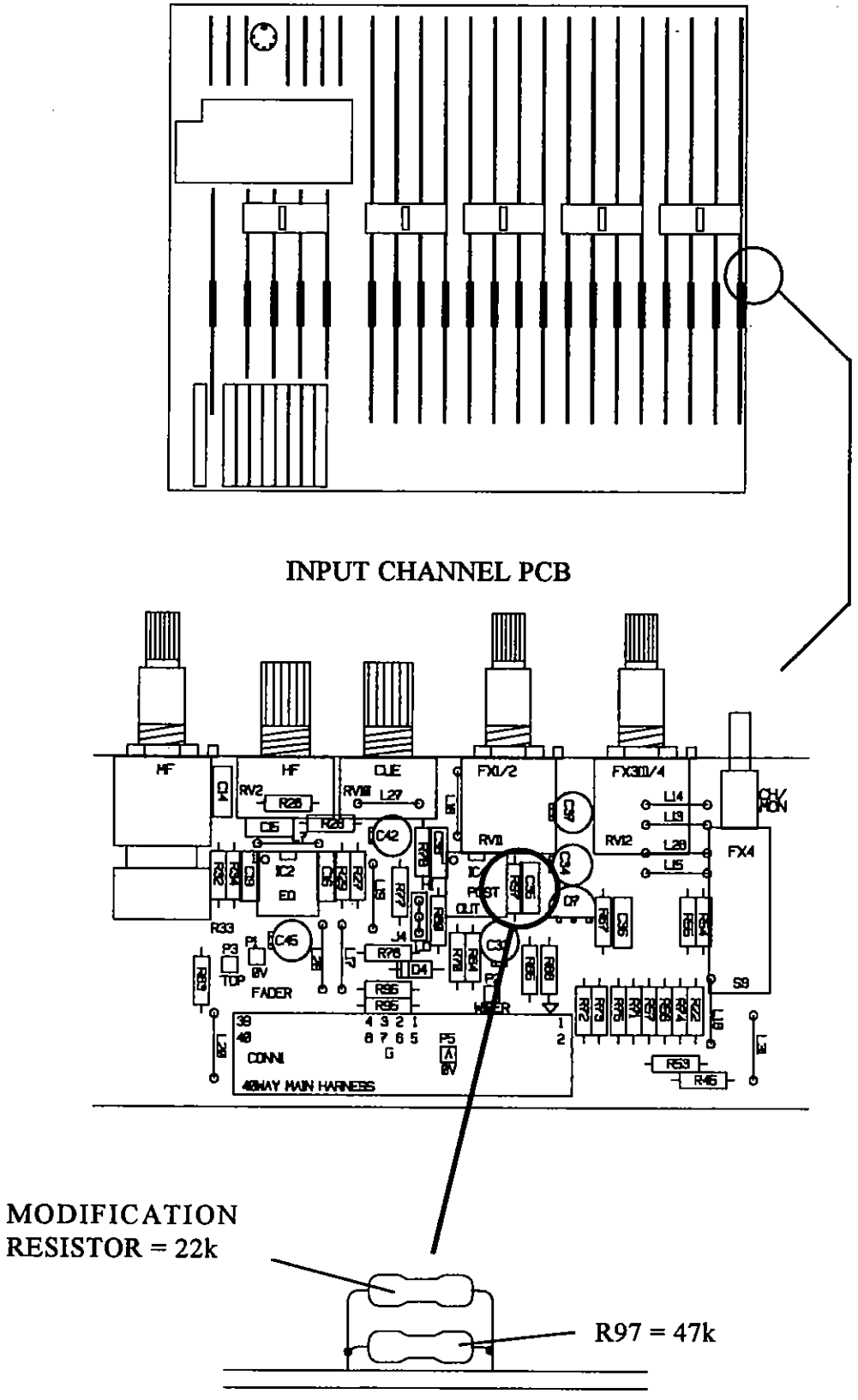

Fig. 5.
Modification to Input Channel PCB.

2. Locate the 27K resistors R10 and R13 on the Master PCB, *see Fig. 6.* Solder two 12K resistors across R10 and R13 on the Master PCB. Tin the resistor legs first and check your work to ensure good solder joints.

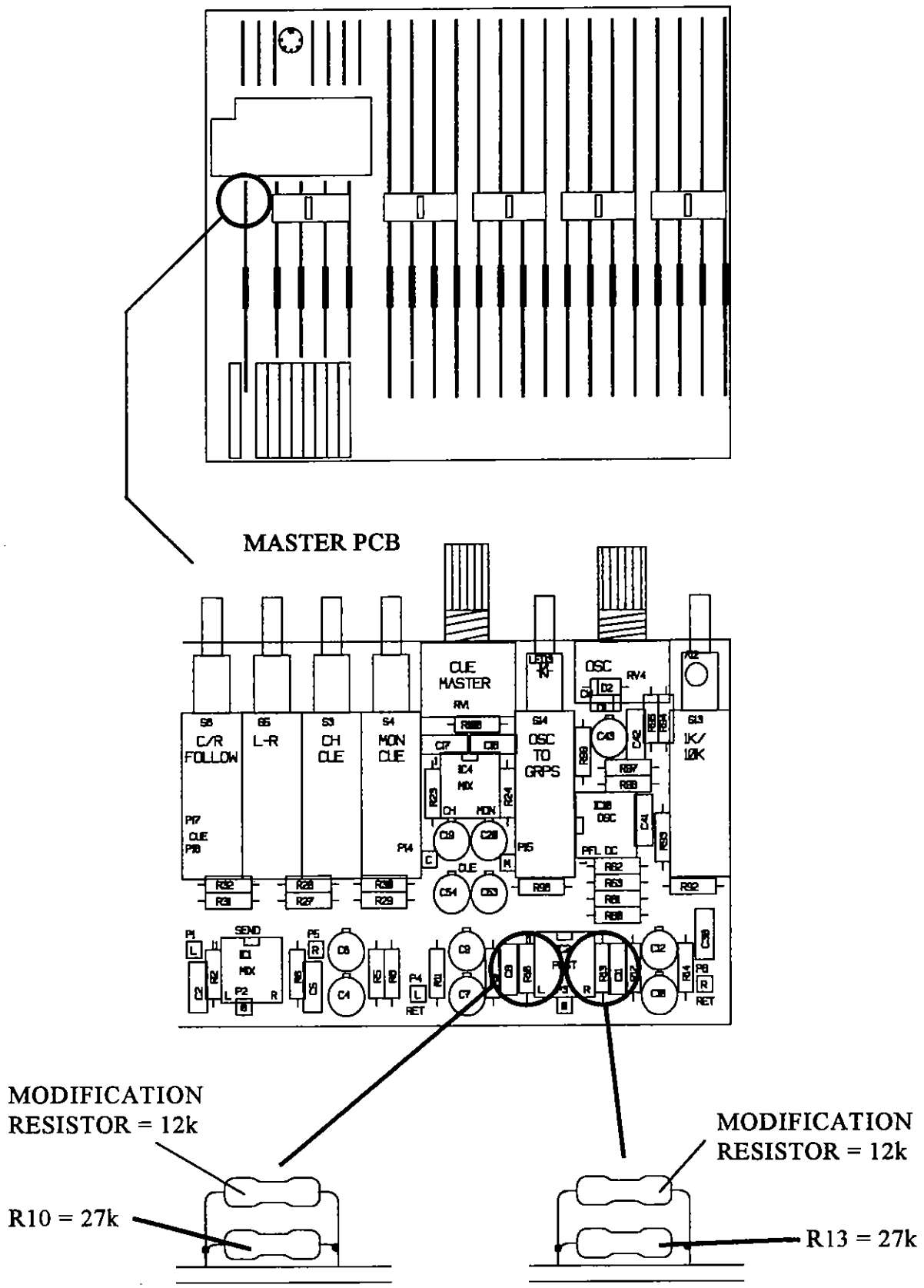

Fig. 6.
Modification to Master PCB.

Stage 4:- INSTALL NEW FADER PCBS

1. Fit the black plastic spacers supplied to the front panel using the "button" type fader mounting screws supplied. *see Fig. 7.* The plastic spacers will prevent the screws from falling out. Do this for every Input Channel fader.

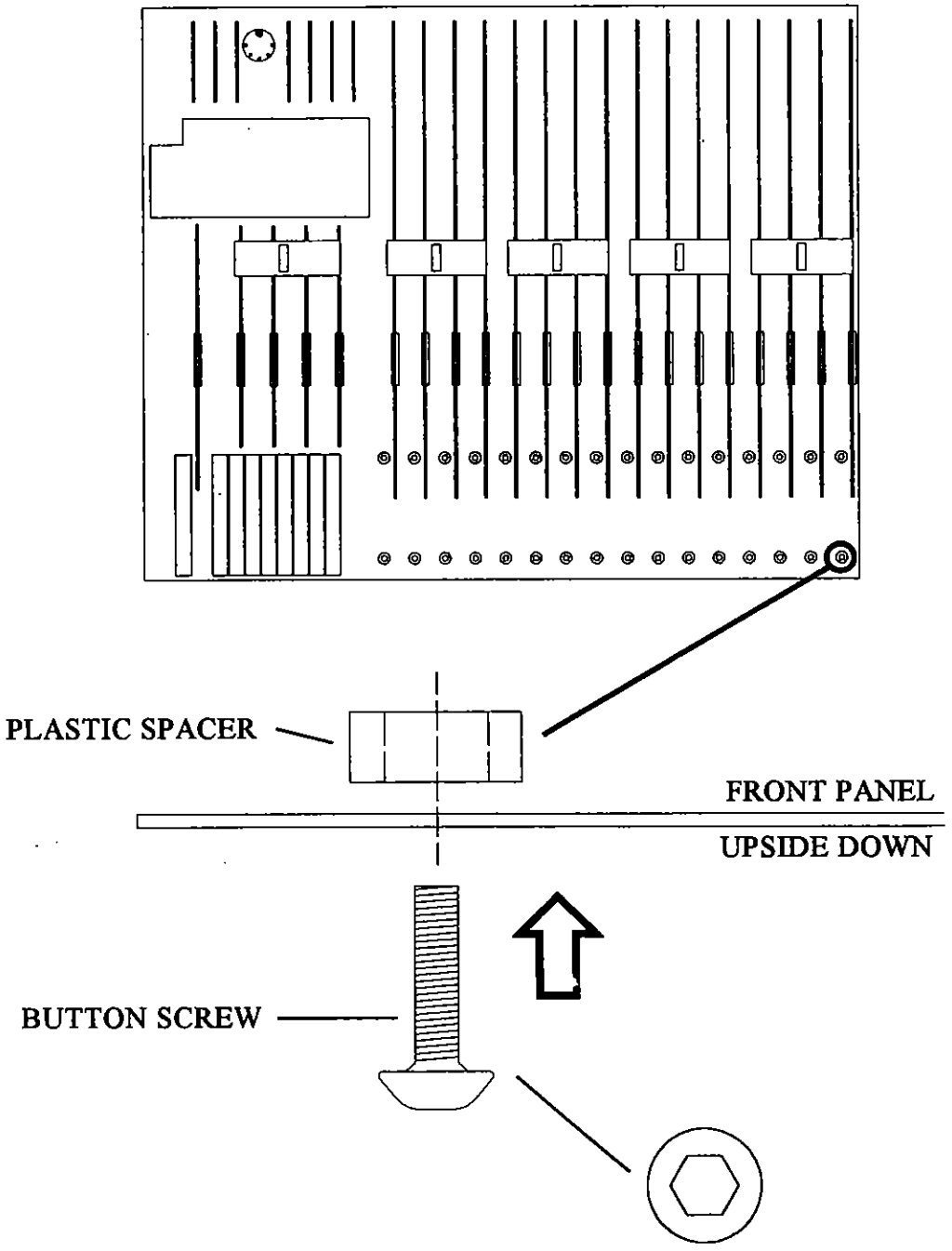

Fig. 7.
Fitting mounting screws & spacers for VCA slave PCBs.

2. Unpack the VCA Slave PCBs (PCB No: AG0314) from the kit. Mount the VCA Slave PCBs onto the front panel with the fader mounting holes aligned with the screws and spacers see *Fig. 8*. There is one VCA Slave PCB for every 8 Input Channels. Screw the PCBs into place using the 16 button head screws.

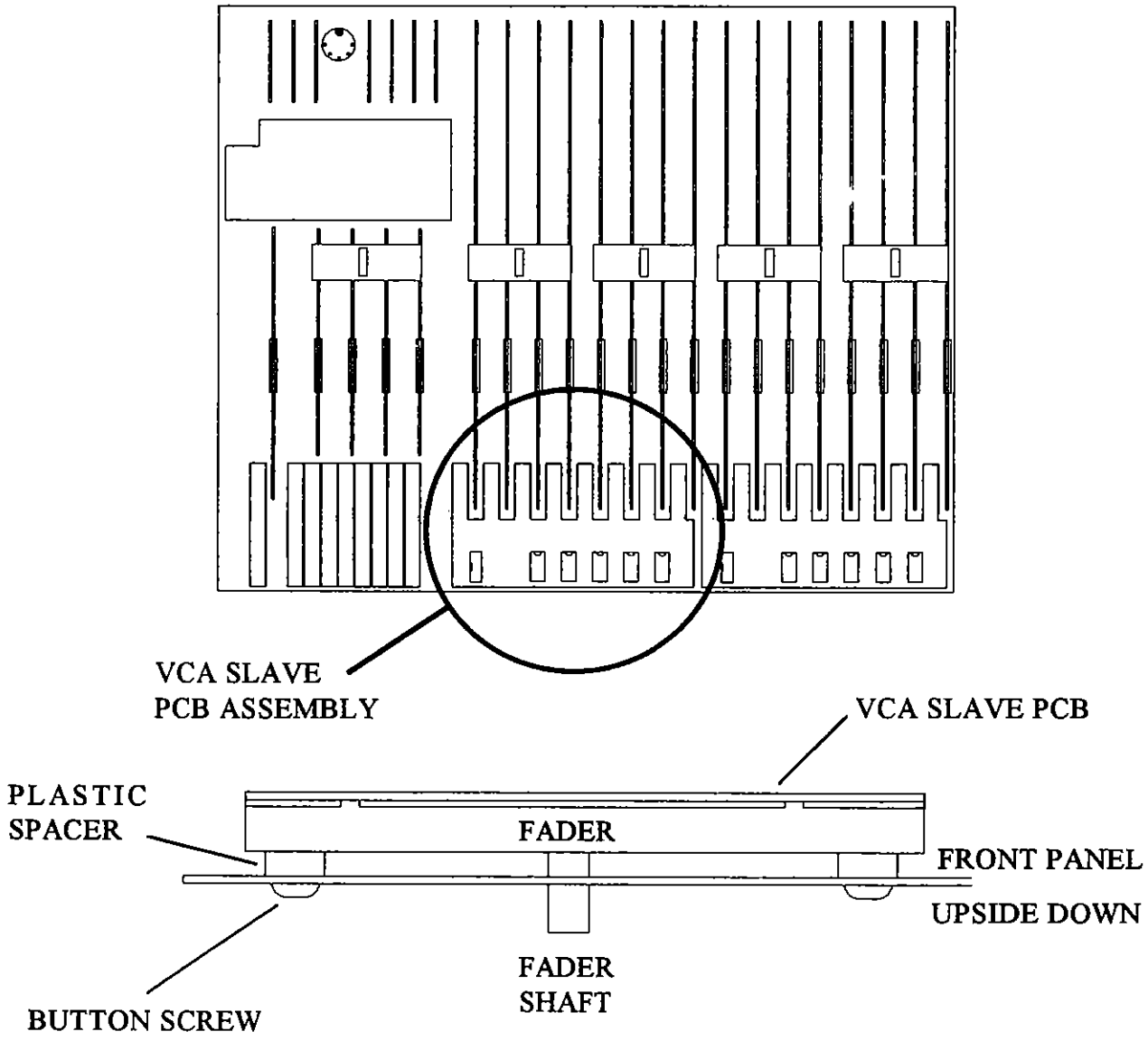

Fig. 8.
Fixing VCA slave PCBs to front panel.

3. Unpack the Channel VCA PCBs (PCB No: AG0315) from the kit. Rest them on the VCA Slave PCBs for now. Solder the Red, Green & Blue wires from the Channel VCA PCBs into the Input Channel PCBs as shown, *see Fig. 9.*
4. Screw the Channel VCA PCBs firmly onto the VCA Slave PCBs pillars using the M3 x 8mm screws provided. There are two mounting screws for each Channel VCA PCB.

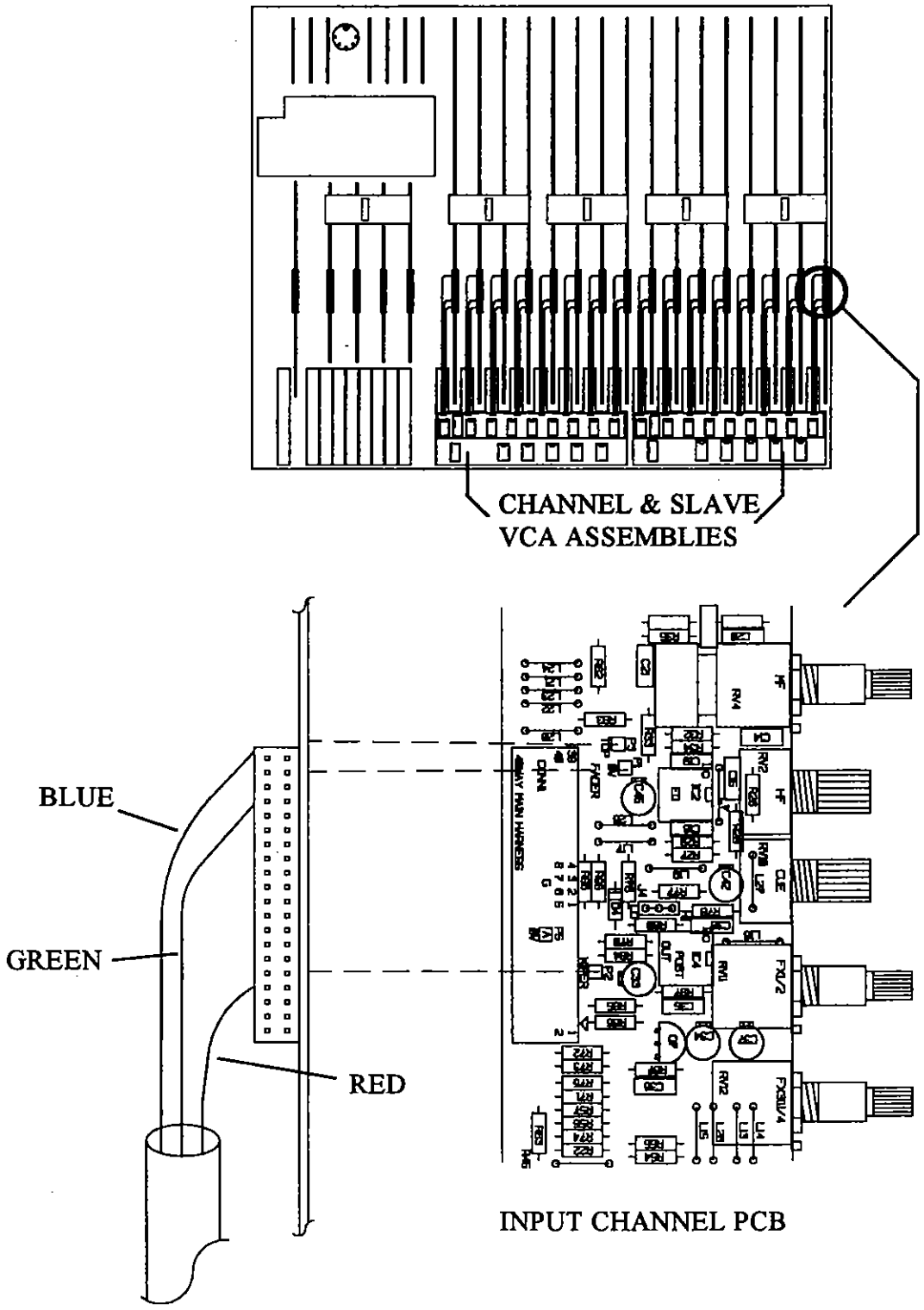

Fig. 9.
Fitting Channel VCA PCBs.

5. The VCA Slave PCBs & Channel VCA PCBs must now be assigned using the jumper links on the PCBs, *see Fig. 10.* Assign the PCBs as follows:

For the VCA Slave PCBs:

Console Channels	link J1	link J2
1 to 8	position A	position B
9 to 16	position B	position A
17 to 24	position A	position B
25 to 32	position B	position A

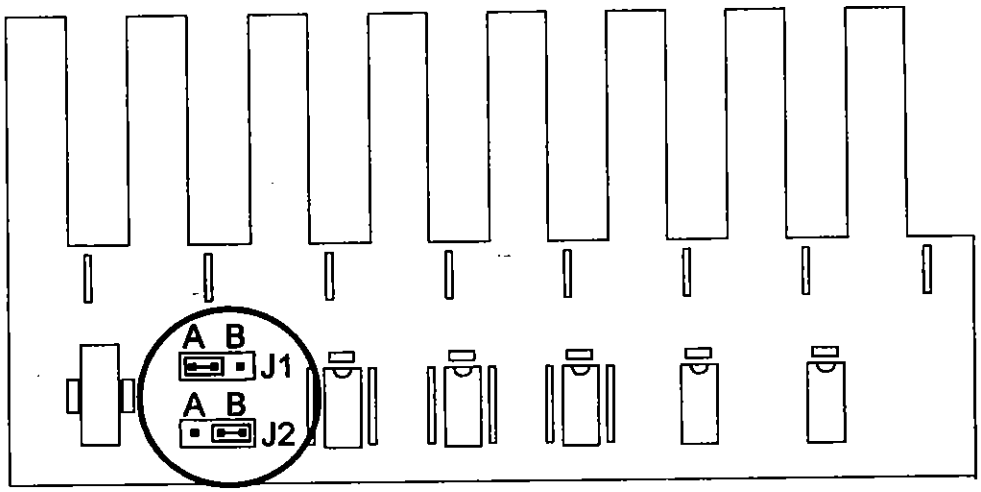

For the Channel VCA PCBs:

Console Channels	link J1
1 to 8	position A
9 to 16	position B
17 to 24	position A
25 to 32	position B

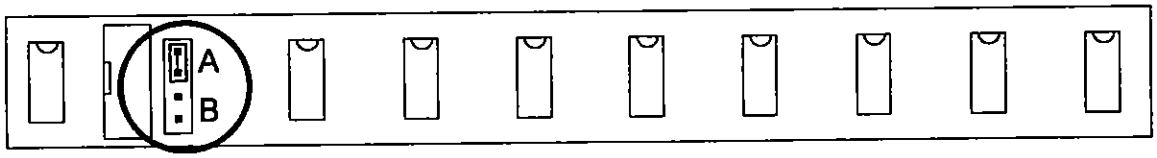

Fig. 10a & 10b.
Assigning the VCA slave PCBs & the Channel VCA PCBs.

STAGE 5 - INSTALLING NEW MICROPROCESSOR AND KEYBOARD

1. Unpack the Keyboard PCB (PCB No: AG0332) in the kit, and place along side the Master PCB. Solder the longer Red, Green & Blue fader wires from the Keyboard PCB to the left Master fader as shown, *see Fig 11a.*

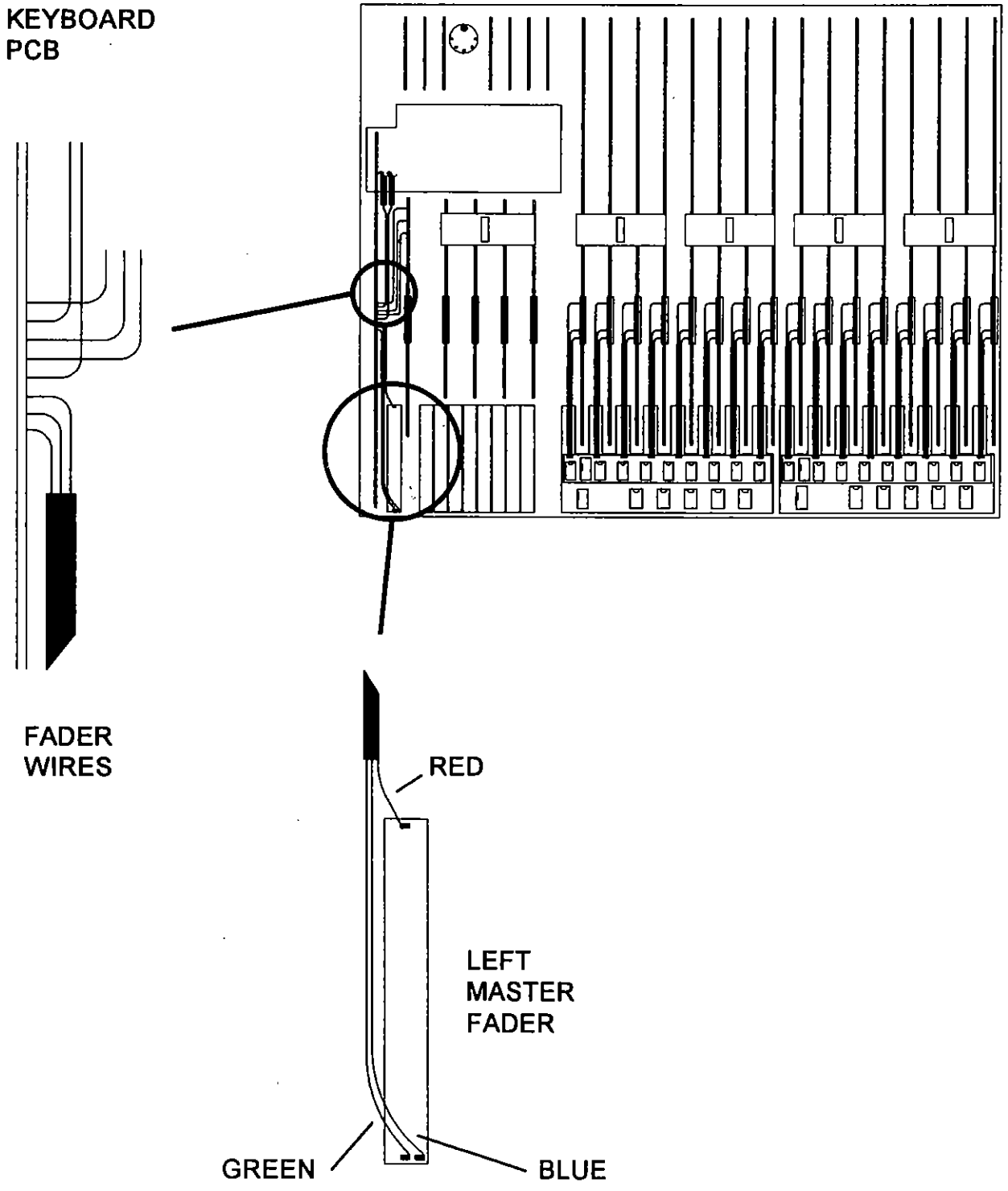

Fig. 11a.
Connecting the Keyboard PCB to the fader.

2. Solder the shorter Red, Green & Blue wires from the Keyboard PCB onto the Master PCB as shown, *see Fig. 11b*.

3. Locate the Red (R) and Blue (B) wires that were previously wired to the top of the left & right Master faders. Cut off a length approx. 150mm from the end of each wire. (150mm is roughly the width of this page). Strip & tin the ends of the remaining wires. Solder both wires into the Keyboard PCB as shown. *see Fig.11b*.

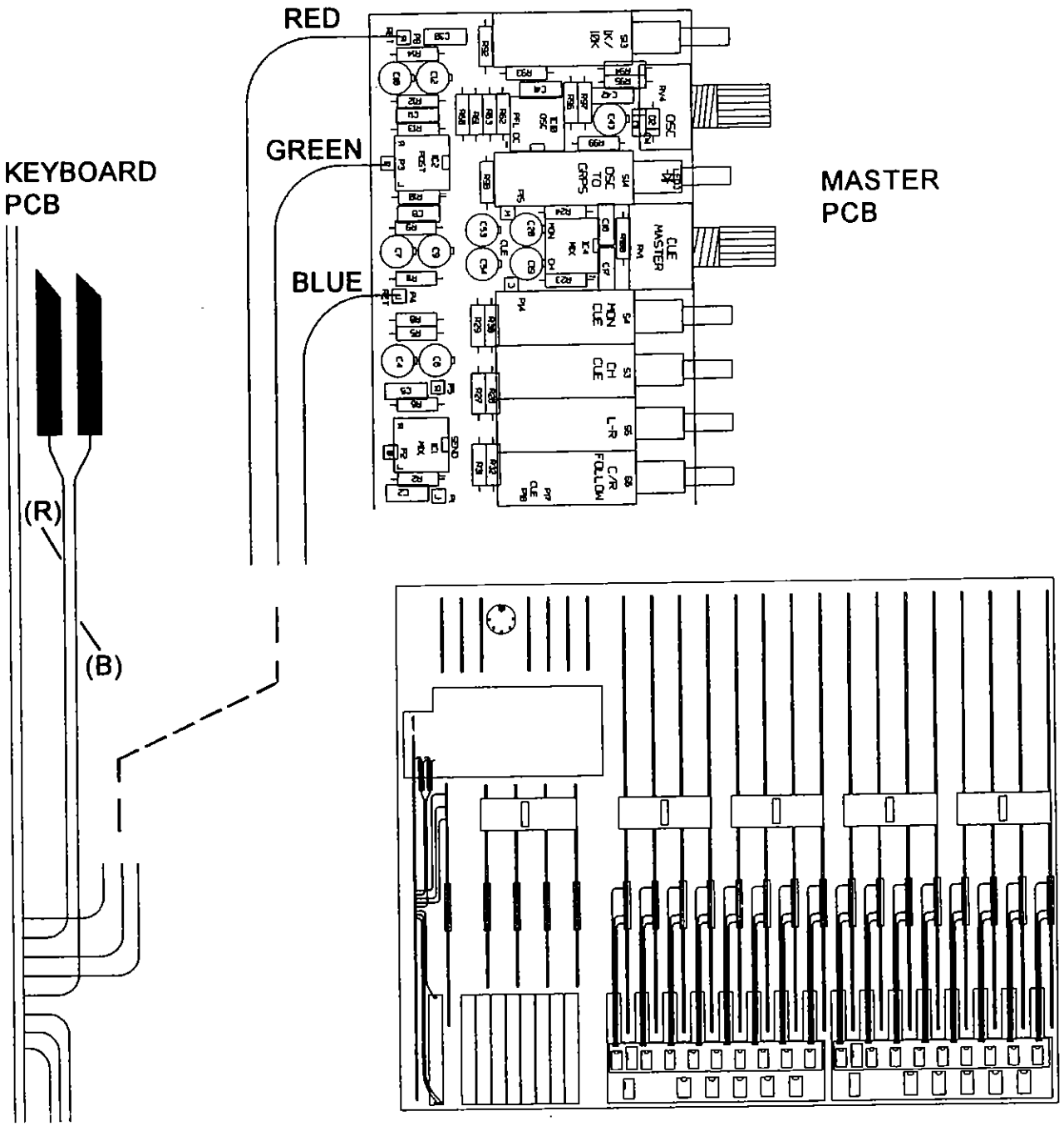

Fig. 11b.
Connecting the Keyboard PCB to the Master PCB.

4. Move the console, so that the Keyboard PCB overhangs your work surface, to gain access to the Keyboard PCB mounting screws. Mount the Keyboard PCB into the position of the old Mute Processor PCB as follows. Fix the PCB into place by inserting the brown 8-way connector (CON 1) onto the Meter PCB connector. Using the two countersunk screws from stage 1, secure the Keyboard PCB into place by tightening the countersunk screws (A) through the front panel into the black plastic joint blocks (B) mounted on the Keyboard PCB. *see Fig. 12.*

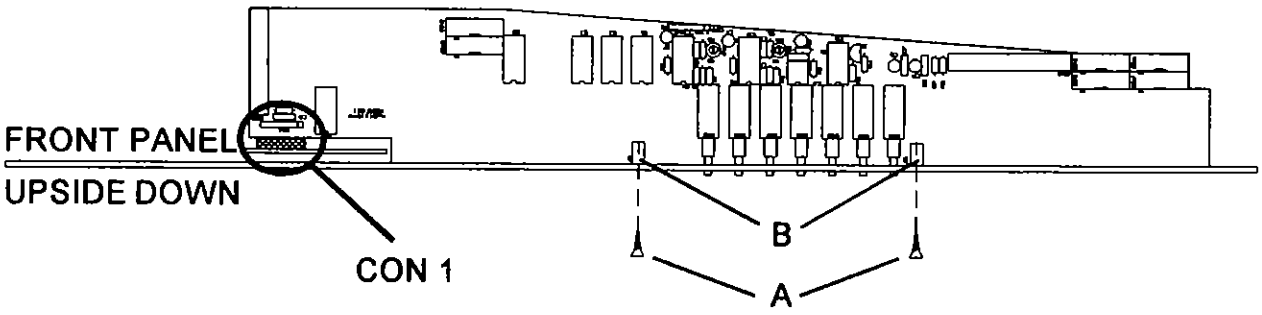

Fig. 12.
Installing the Keyboard PCB.

5. Unpack the V-Micro PCB (PCB No: AG0330) from the kit. Unscrew the jack nut from the jack socket on the PCB. Mount the PCB onto the front panel and secure it using the jack nut (A) and the 4AB x 3/16 black countersunk screw (B) provided. Plug the other end of the switch harness into the Keyboard PCB connector CON8; *see Fig. 13.*

6. Locate pin 1 of the 5-pin XLR power connector and desolder the Black wire (A); see *Fig 14.* Solder the end of the Black wire to the other end of the Black wire that was attached to the V-Micro PCB. Solder the joined wires back into pin 1 of the XLR.

7. Solder the red & green wires from the 5-pin XLR power connector onto the V-Micro PCB holes labelled CON7 as shown in *see Fig. 13.*

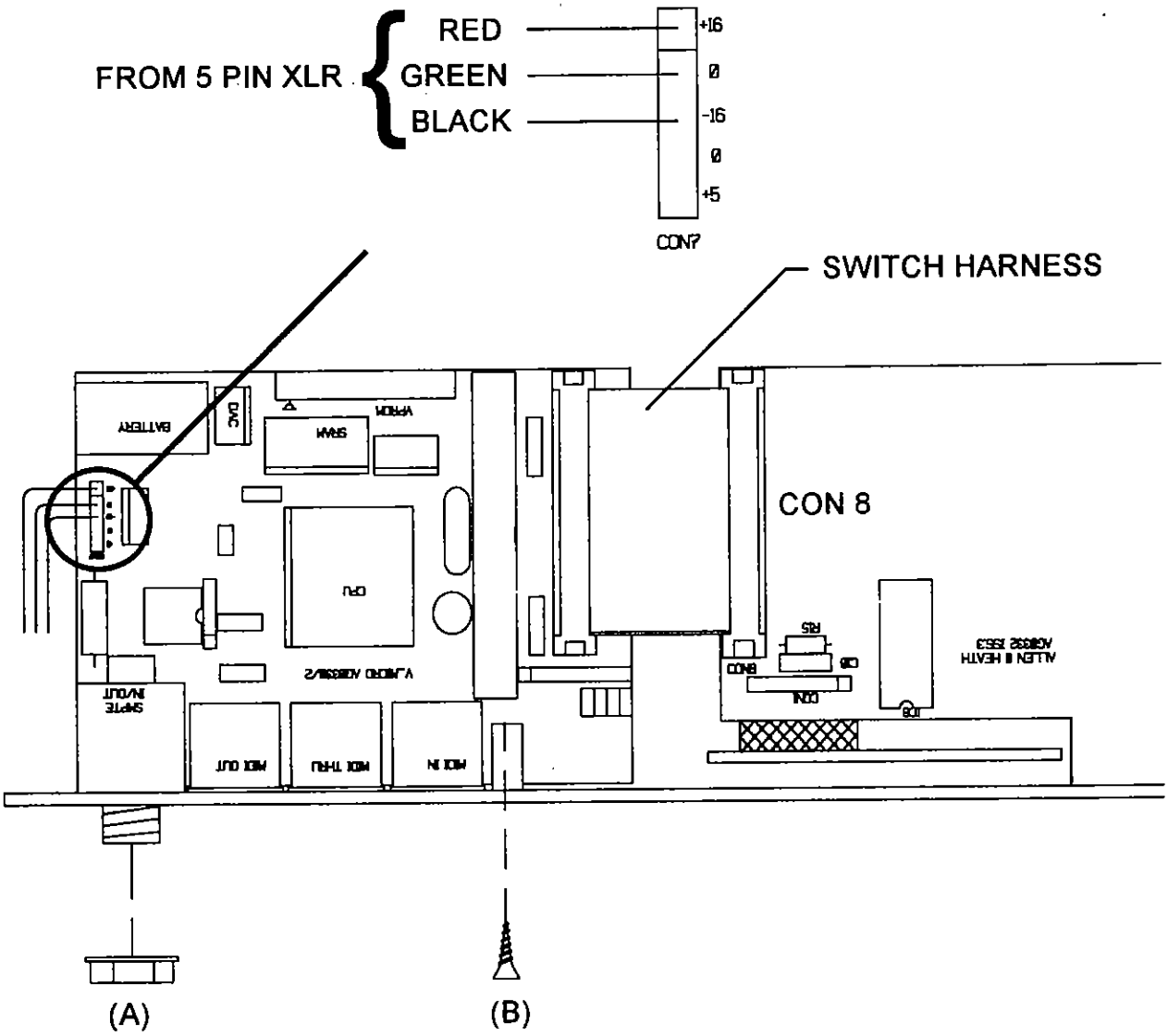

Fig. 13.
Installing the v-micro PCB.

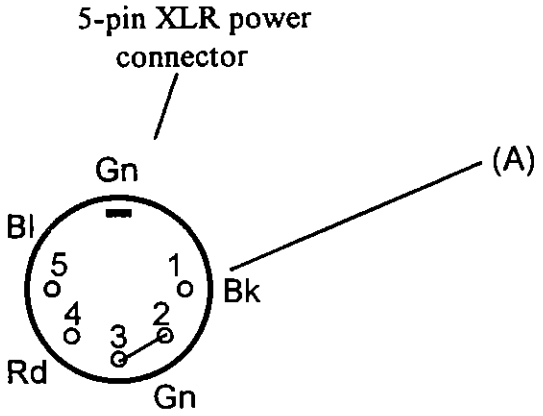

Fig. 14.
Soldering the black wire to the power connector.

8. Locate the M3 screw (A) on the Meter PCB and unscrew it. *see Fig. 15.* Unpack the two M3 x 25mm pillar screws (B) in the kit and use them to mount the VPROM PCB (C) and SMPTE PCB (D) firmly to the Meter PCB as shown.

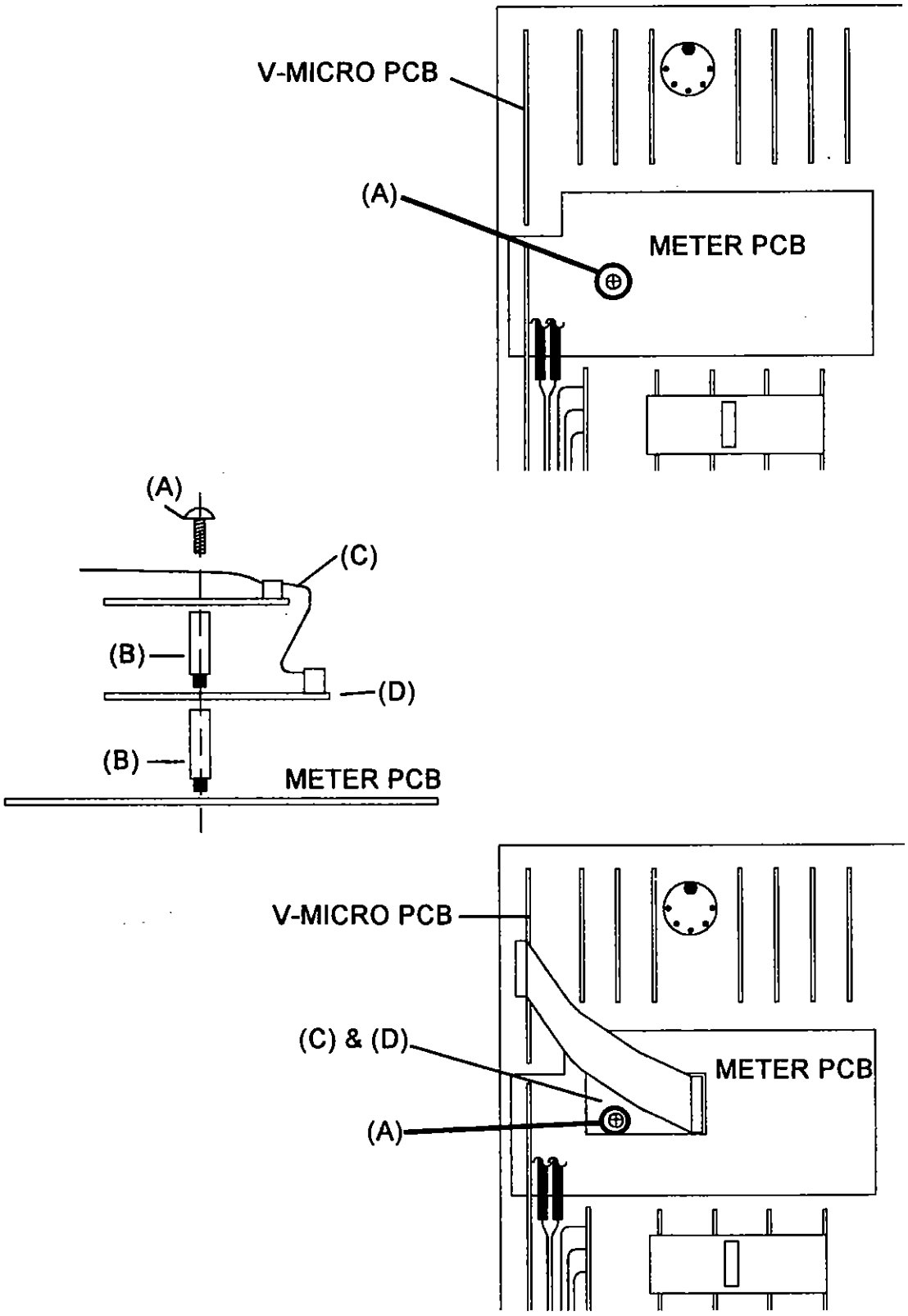

Fig. 15.
Fixing the VPROM & SMPTE PCBs.

Stage 6 - Fitting Harnesses

1. Plug the other end of the VCA harness, that was connected to the Keyboard PCB, into connector CON5 on the V-Micro PCB, as shown. *see Fig. 16.*

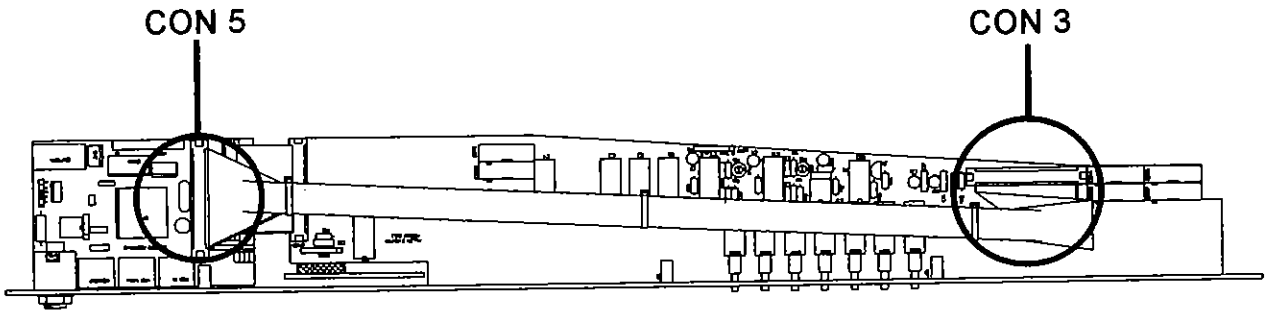

Fig. 16.
Fitting the VCA harness.

2. Unpack the VCA Slave Harnesses from the kit. Plug the harnesses into the connectors labelled CON1 (A) on the VCA Slave PCBs and onto the connectors (B) on the Channel VCA PCBs. Connect the ends of the harnesses to CON4 (C) and CON5 (D) on the Keyboard PCB as shown. *see Fig. 17.*

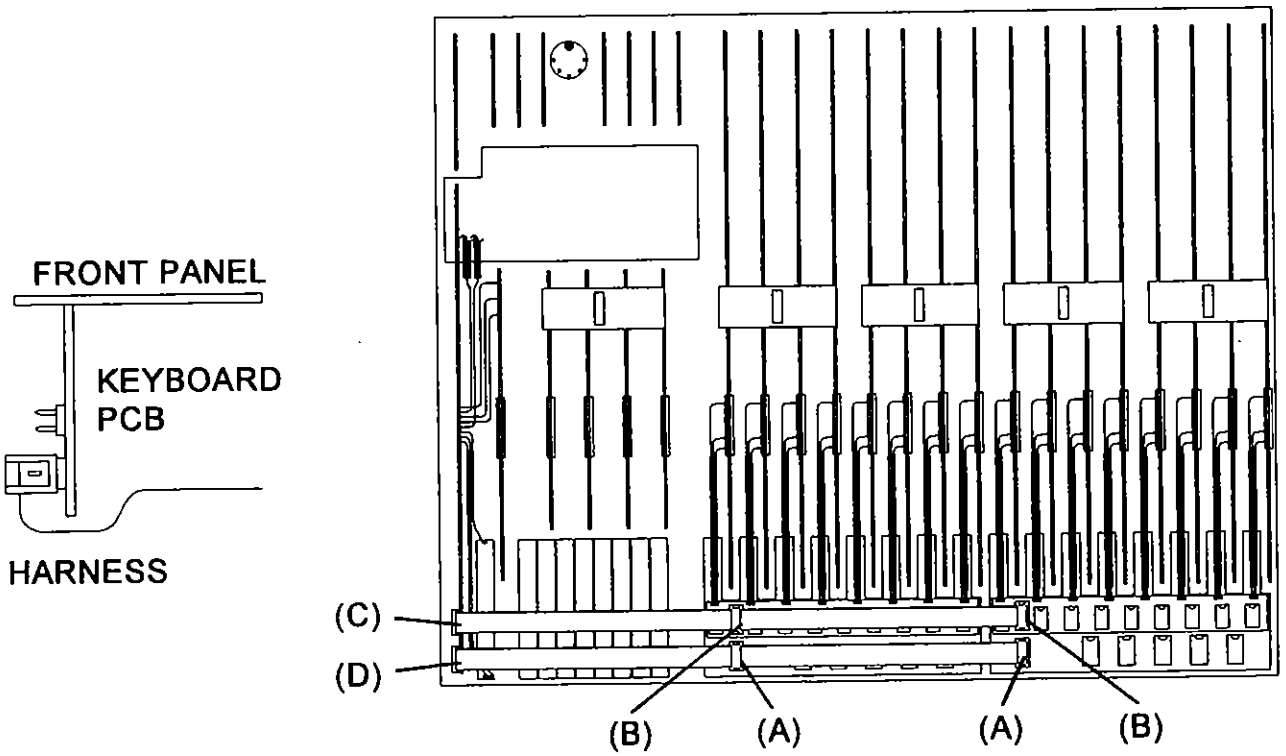

Fig. 17.
Fitting the VCA Slave & Channel harnesses.

3. If you are upgrading a 24 or 32 Channel GS3 unpack the VCA Slave Expander harnesses (A) and fit them to CON6 (B) and CON7 (C) on the Keyboard PCB as shown. *see Fig. 18.*

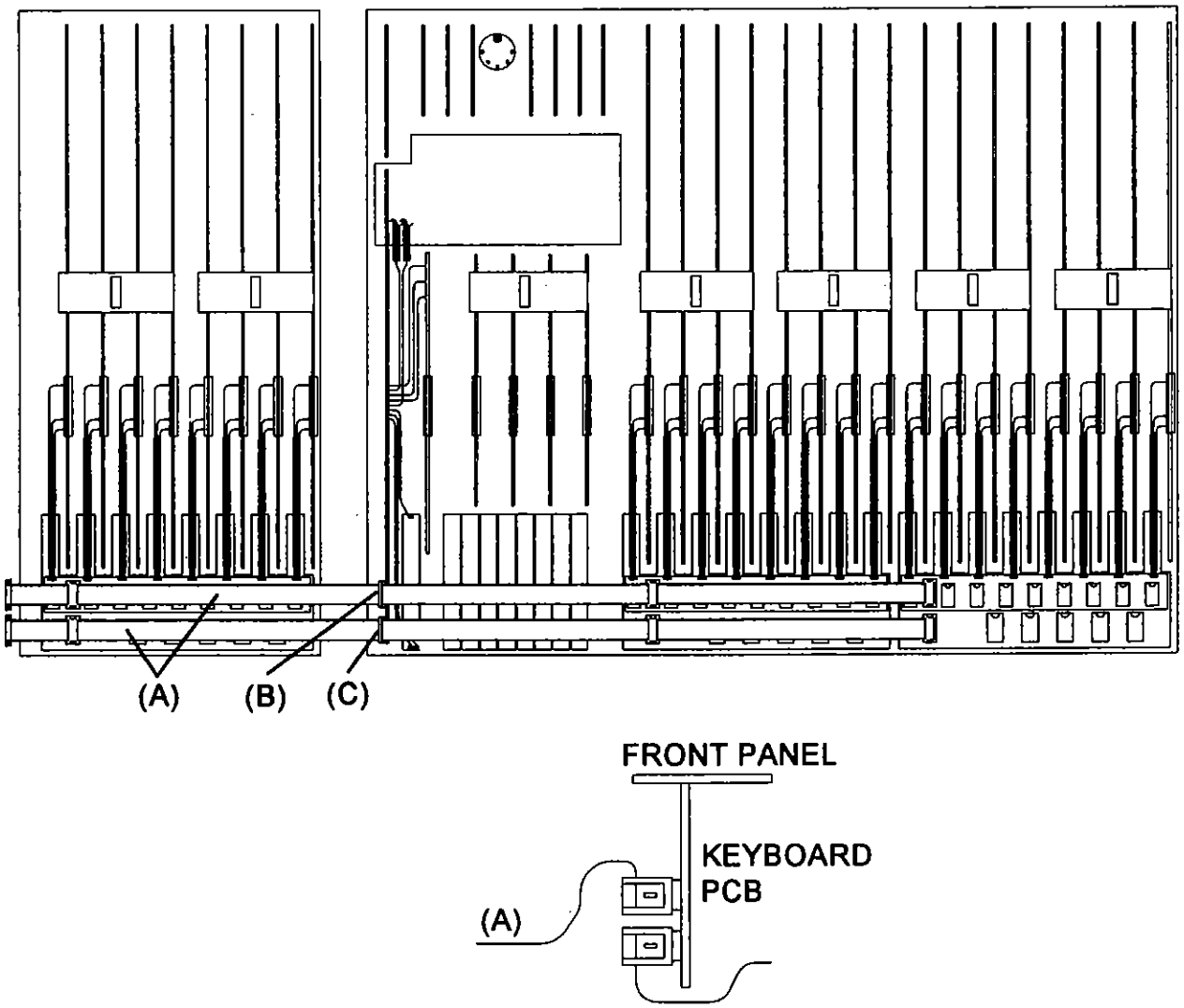

Fig. 18.
Fitting the VCA Slave & Channel harnesses to an X8 expander.

4. Unpack the Mute Slave harness (A) in the kit. Plug the harness into the mute slave connectors (B), and into connector CON9 (C) on the Keyboard PCB as shown. *see Fig. 19.* Refit new cable ties around each mute slave connector and mute slave PCB.

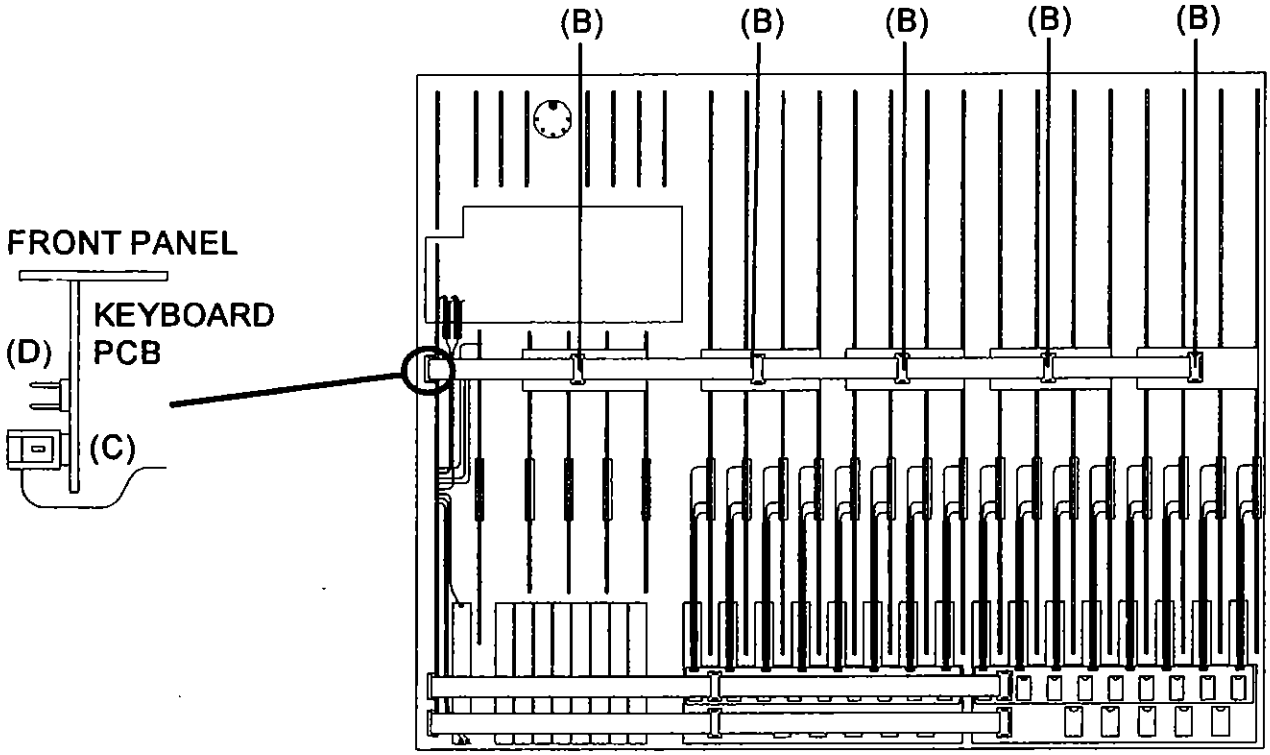

Fig. 19.
Fitting the Mute Slave harness.

If you are upgrading a 24 or 32 channel GS3, plug the Mute Slave Expander harness into connector CON10 (D) on the Keyboard PCB.

5. Re-fit the 40 way main ribbon harness (A) as shown. *see Fig. 20.*

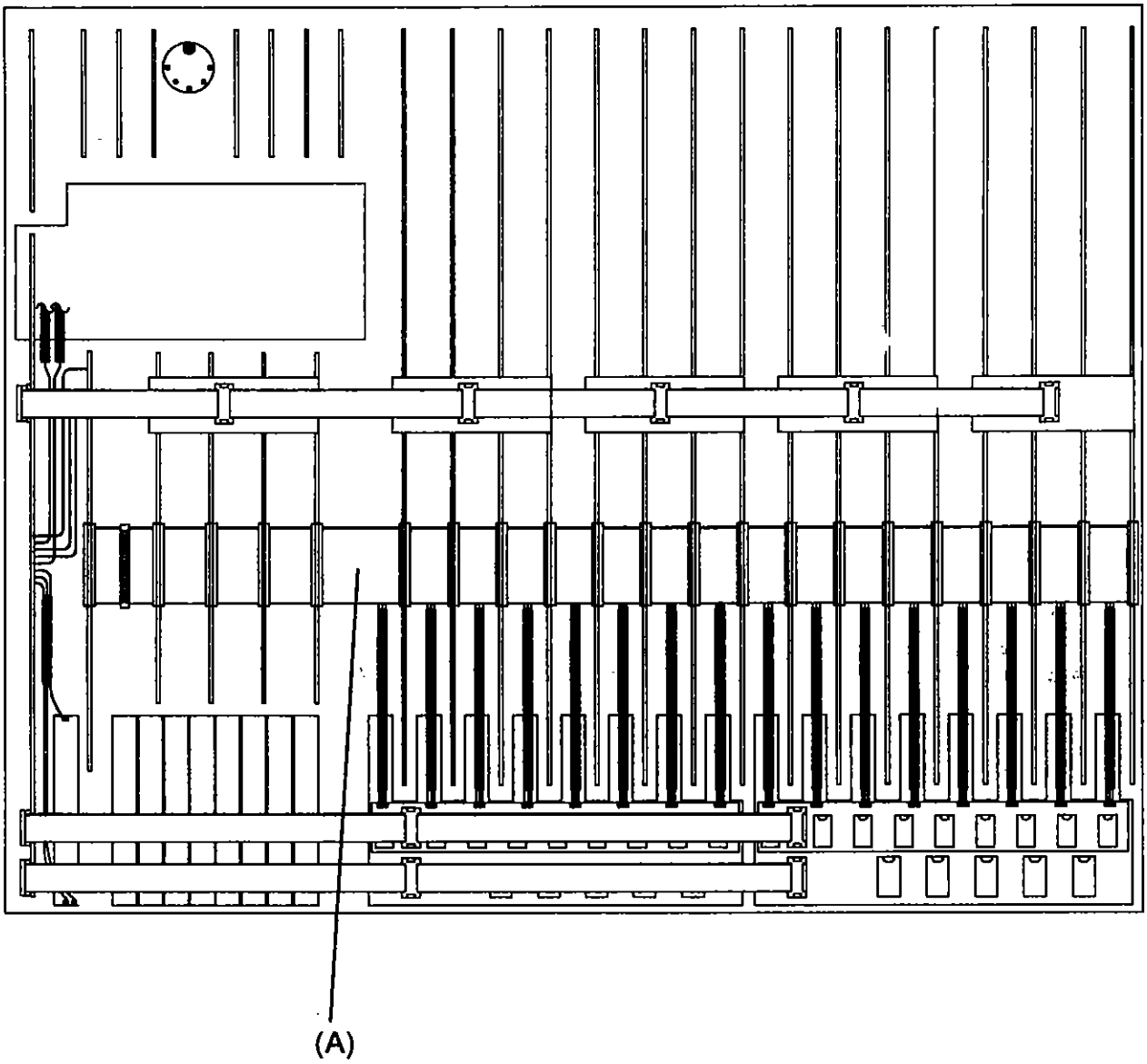

Fig. 20.
Refitting the 40 way main ribbon harness.

Stage 5:- RE-ASSEMBLING THE CONSOLE.

1. Place the rear extrusion close to the console and screw the green earth wire to it. Offer up the front & rear extrusions so that the console front panel slots into the extrusion slots. Take care not to scratch the front panel.
2. Position the side trims next to the console and screw them to the extrusions using the M6 Hex screws.
3. Turn the console up the right way. Fit the fader knobs on to the fader shafts. When fitting the fader knobs ensure that the fader shaft is at the bottom of it's travel to prevent stress on the fader body.
4. Unpack the adhesive sticker in the kit of parts. Carefully stick it onto the automation strip on the right hand side of the front panel as shown. *see fig. 21.*
5. Before fitting the console base carry out the SYSTEM CHECKS described in the next section of this manual. To refit the console base turn the console upside down again. Make sure that the foam rubber pads on the base are positioned over the mute slave PCBs. Screw the base into place.

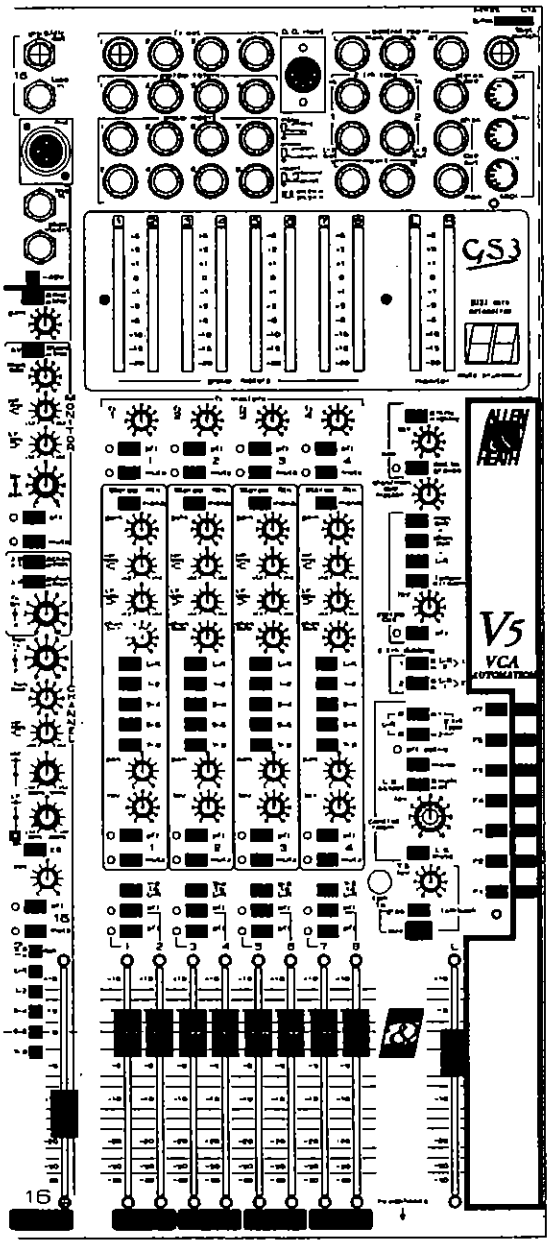

Fig. 21.
Fitting the V5 Automation label.

SYSTEM CHECK

1. While holding down the Function Key 6, power on the console. This will perform a hard reset for the on-board computer.

Problem
If the red PFL ACTIVE LED on the master panel is on, and all the console PFL switches are off.

Check-
Check that the main 40 way console harness is correctly fitted, i.e. no misaligned connectors, bent connector pins; see page 23.

2. Check that the display shows a steady 0.

Problem
If the display is blank.
Check
Check that the keyboard connector CON1 is connected to the Meter PCB connector, see page 17.
Check that the small Switch Harness is correctly fitted between the Keyboard PCB (CON 8) and the V-Micro PCB; see page 18.
Check that the power supply wires are correctly fitted to the V-Micro PCB; see page 17 & 18.

3. Check that all of the mutes are functioning correctly by turning them on & off.

Problem
If a single mute or a group of mutes dont work.
Check
Check that the Mute Slave Harness connectors are correctly fitted to the Mute Slave PCB connectors, i.e. no misaligned connectors or bent pins; see page 22.
Check that the Mute Slave PCBs are correctly mounted onto the Channel PCB connectors.

Problem
If all of the mutes dont work.
Check
Check that the Mute Slave Harness connectors are correctly fitted to the Keyboard PCB connectors, i.e. no misaligned connectors or bent pins; see page 22.

4. Use the console's internal oscillator to check that the L/R master fader is functioning correctly as follows:

- Depress the 'OSC TO GROUPS' switch on the master panel.
- Raise Group faders 1 & 2 to the 0bB mark.
- adjust the oscillator level until the Group Meters 1 & 2 display 0VU.
- Route Group Faders 1 & 2 to the LR mix bus by depressing the '1-2 TO L-R' switch above the Group Faders.
- Raise the L/R master fader to the 0dB mark. The L/R Meters should display 0VU. Move the L/R Master Fader to the -10dB mark. The L/R Meters should now display -10VU.

Problem
If there is no control over the LR level.
Check
Check there are no PFLs currently acive on the console.
Check that the LR to 2 TRACK routing buttons on the master panel are not depressed.
Check that the VCA Harness is correctly fitted between the Keyboard PCB and the V-Micro PCB; see page 20.
Check that the wiring from the LR Master Fader to the Keyboard PCB, and from the Keyboard PCB to the Master PCB are correct; see page 15, 16.

Problem
If the level on the L and/or R Meters is 10dB too high.
Check
Check the gain modification resistor on the Master PCB is correctly fitted; see page 10.

5. Now use the console's internal oscillator to check that all of the channel faders are functioning correctly as follows:

- Plug one end of a 1/4" mono jack lead into Group Insert 1. The level on Group Meter 1 will disappear. Deselect the '1-2 TO L-R' group routing switch.
- Plug the other end of the lead into the Line Input on Channel 1. Check that the 'MIC/LINE' switch is depressed, the monitor 'REV' switch is up, and that the Channel EQ switch is up.
- Press the PFL switch above the Channel Fader. Set the Channel Input gain until the LR Meters read 0VU. Deselect the PFL switch.
- Route the channel to the L-R bus with the pan control set to the centre. Raise the channel fader to the 0dB position. The L-R meter should be reading 0VU (with the LR Master Fader at 0dB position). Move the channel fader to the -10dB position. The LR Meter should be reading -10VU.
- Repeat the above procedure for all Input Channels.

Problem
If none of the channel faders are working.
Check
Check that the VCA Slave Harnesses are correctly fitted to the Keyboard PCB, see page 22, 21.
Check that the VCA Slave and Channel VCA PCBs have been correctly assigned; see page 13.

Problem
If a group of the channel faders (i.e. channels 1 to 8 or 9 to 16) are not working.
Check
Check that the VCA Slave Harnesses are correctly fitted to the VCA Slave and Channel VCA PCBs;see page 20.
Problem
If one of the channel faders is not working.
Check
Check the wiring of the three wires from the Channel VCA PCBs to the Input Channel PCBs; see page 13.

Problem
If the level on the LR Meters is 10dB too high.
Check
Check the gain modification resistor on the Input Channel PCB is correctly fitted; see page 9.

6. Turn on your Atari ST compter and run the V-EDIT program (refer to the Getting Started section

in the 'GS3 V5 Upgrade Automation Manual'). Connect the MIDI out from the Atari to the MIDI in of the GS3, and the MIDI out from the GS3 to the MIDI in of the Atari.

- Press CTRL-G on the Atari keyboard, or select 'Connect GS3V' from the 'Utilities' menu. The positions of the faders on the console will be displayed on the V-EDIT screen.
- Move the faders, & press mutes on the console. The fader positions and mute statii will be displayed on the V-EDIT screen.

Problem
If the faders do not move, or the mutes do not change state on the V-EDIT screen.
Check
Check the GS3 MIDI out to Atari MIDI in connection.
Using the mouse click on the one of the mute icons on the V-EDIT screen. The corresponding mute on the console will also change state.

Problem
If the mute does not change state on the console.
Check
Check the GS3 MIDI in to Atari MIDI out connection.

7. Select 'About' from the the 'Desk' menu. The following information will be displayed:

TYPE:	(Your console type e.g. GS3V-16)
SMPTE OPTION:	Present
SOFTLINK:	Not Present
MROS:	Not Present

The version control section should display the following:

GS3/V:	V5.04 (or later)
SMPTE:	V1.1 (or later)
V-EDIT:	V5.04 (or later)
MROS:	-

Problem
If the SMPTE Option is not present.
Check
Check that the SMPTE PCB is corectly mounted, and that the harness to the SMPTE PCB is correctly fitted; see page 19.

8. Use the following procedure to check the SMPTE Generator.

- Connect one end of a 1/4" mono jack lead into the Footswitch socket (above the MIDI connectors, now a SMPTE in/out socket).
- Connect the other end of the lead into a Channel Input. Select LINE and press the PFL button on the channel. The LR Meter should be registering no signal.
- In V-EDIT, select 'SMPTE Option' from the 'Utilities' menu. Click on the 'GENERATE' button. The LR Meter will now display a signal (dependent on the input gain of the channel).
- In V-EDIT, select 'SMPTE Option' from the 'Utilities' menu. Click on the 'STOP' button again.

The LR Meter will register no signal again.

Problem
If there is no signal on the LR Meters.
Check
Check that the SMPTE PCB is corectly mounted, and that the harness to the SMPTE PCB is correctly fitted; see page 19.

THE GS3-MB8 MULTITRACK BALANCE OPTION

The **GS3-MB8** balance option is a kit of parts which is fitted into the **GS3** or **GS3V** console to balance 8 channel **GRP/DIR OUT** and **TAPE IN** connectors. For 16-track multitracks two kits are required, 24-track three kits etc. Each kit contains 8 small circuit assemblies and wiring harnesses, one per channel.

Access is required to the console internal assemblies. Circuit board track modification and soldering is necessary. THIS WORK SHOULD ONLY BE CARRIED OUT BY TECHNICALLY QUALIFIED PERSONNEL.

POWER SUPPLY CONSIDERATIONS - IMPORTANT NOTE !

The standard **GS3** console is powered by the external power unit type **MPS9**. This operates near its maximum capability when powering the largest console in the range, the 32 channel **GS3V**. Each **MB8** circuit assembly draws around 12mA current (a set of 8 needs 100mA). For **GS3V-32** consoles with more than 8 channels of balance option fitted (1x **MB8** kit) the **MPS9** should be replaced with the *ALLEN & HEATH* **RPS9** or **RPS5** power unit. This may be ordered separately. Consider this also when fitting an expander to a balanced **GS3V-24**. Please state the mains voltage setting required when ordering a replacement power unit.

CIRCUIT DESCRIPTION

Each channel is fitted with a small piggyback circuit assembly. Refer to circuit diagram D209 for the schematic and board layout of this assembly. The console **GRP/DIR OUT** is taken to IC1B which buffers and boosts the signal by 6dB. IC2 is the industry standard SSM2142 differential balanced driver which provides a further 6dB of boost to bring the console -8dBu (-10dBV) low level signal to the +4dBu high level standard. The output is electronically balanced and fed to the tip (+) and ring (-) connector pins of the output jack socket. The console **TAPE IN** jack socket is reconfigured for tip (+) and ring (-) balanced input fed to IC1A which attenuates the signal by 12dB to provide an unbalanced -8dBu to the console. For consoles previously modified for high level operation or where low level balancing is required, the circuit assemblies may be adjusted for unity gain operation by replacing R1, R2 and R5 and removing R7 as shown on diagram D209. R10,11 and C11,12 filter the DC power input, while diodes D1 and D2 provide protection against reverse voltage.

CHECK THE CONTENTS OF THE KIT :

S3 BAL CIRCUIT ASSEMBLY	ZX000-709	QTY x 8
WIRING HARNESS	ZX000-131	QTY x 8
SPACER NYLON M3 x 4mm	AB0331	QTY x 16
SCREW M3 x 12mm PAN POZI	AB0078	QTY x 16
LOCK NUT M3	AB0102	QTY x 16
ADHESIVE LABEL (-10 BAL +4)	AN0394	QTY x 1 block
THESE FITTING INSTRUCTIONS	AP0206	QTY x 1

Fitting the **MB8** option requires removal of the base and part of the chassis assembly, small channel circuit board track cuts and component adjustments, assembly of the piggyback circuit boards using the spacers, screws and nuts, soldering of harnesses to the channel boards, testing of the signal level and balance function, re-assembly of the console, and fitting of the adhesive connector labels. We recommend that this work is carried out in a well lit service workshop on a suitably sized clean work surface protected to prevent cosmetic damage to the console.

TOOLS REQUIRED :

2 point cross head screwdriver
4mm hexagon Allen key
Long Nose Pliers
M3 open ended spanner
Printed circuit track cutting tool
Fine tip soldering iron

ACCESS TO THE CHANNEL ASSEMBLIES

BEFORE YOU START OBSERVE THESE PRECAUTIONS: Make sure your work surface is clear of dirt and debris which may damage the cosmetic finish of the console. It is best to place a clean table cloth or foam sheet over the work surface first. Avoid balancing the console on any one of its corners as this may damage the trim. Retain all removed fixing screws and components in a safe place for reassembly.

To gain access to the internal assemblies remove the flat steel base and the rear extrusion. If channels 1 to 8 are to be modified the adjacent side trim will also need to be removed. Please note that the front panel is only retained in position by slotting into the extrusions, so that when the rear extrusion/side trim assembly is removed great care must be taken not to dislodge the control panel from the front extrusion. Proceed as follows:

1. Disconnect the power supply and all cables from the console.

2. Place the console upside down on a suitable flat work surface.

3. Remove the base plate screws using a 2-point crosshead screwdriver. Lift off the base.

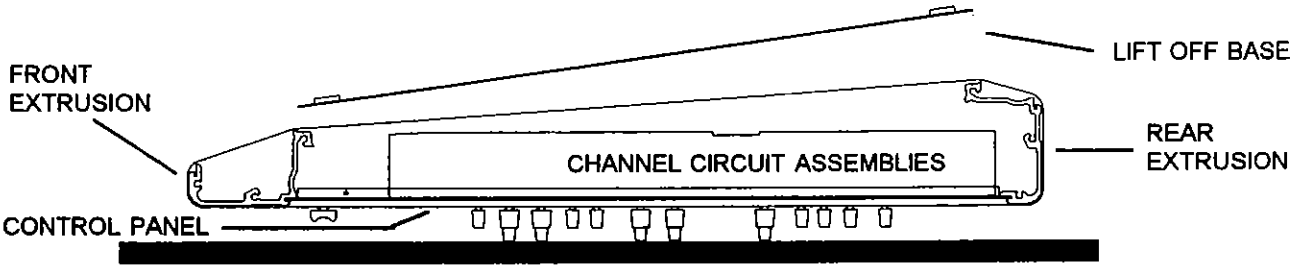

4. Using a 4mm hexagon key remove the 6 large screws retaining the rear extrusion to the side trims. Carefully slide the extrusion away from the control panel to gain access to the rear of the channel circuit assemblies. Do not stretch the green earth wire attached to the extrusion.

5. This instruction applies only if you are fitting the option to channel 1. Remove the side trim nearest the channels to gain access to the channel 1 circuit assembly. Remove the 3 large screws holding this side trim to the front extrusion. Support the front extrusion to prevent it slipping off the control panel.

CONFIGURING THE ASSEMBLIES

6. Identify the issue number of the console channel PCBs (**PCB AG0308 Issue 1 or Issue 2**). This is printed in the tracking behind the jack connectors. Modify these assemblies by cutting the tracks, removing components fitting the option assemblies and soldering on the option wiring harnesses as detailed in the **FITTING INSTRUCTION DRAWING D210 sheets 2 and 3.**

   NOTE: Check the level setting requirement. The option assemblies are set to convert a standard low level (-10dBV) console to balanced high level (+4dBu) operation. For different level settings refer to the circuit diagram D209. Check first that your console has not already been modified for high level operation.

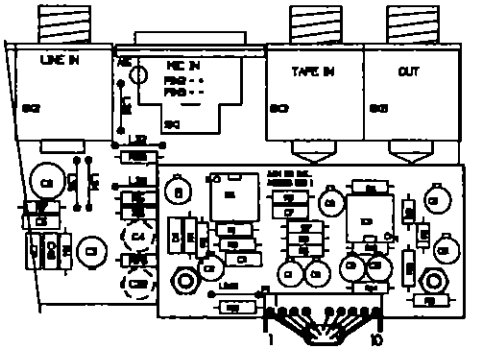

VIEW LOOKING ON COMPONENT SIDE OF BOARDS

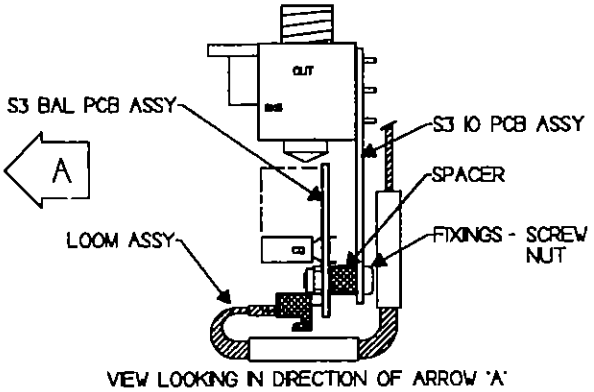

VIEW LOOKING IN DIRECTION OF ARROW 'A'

FITTING THE OPTION

To gain maximum screwdriver and soldering access start from the highest number channel down, for example from 8, 7, 6 to 1, or 16, 15, 14 to 9 etc.

Fit the option **BAL PCB AG0316** to the channel assembly using the 2 screws, spacers and nuts provided in the kit.

Next plug on the **CABLE HARNESS** connector ensuring correct orientation. The connector ears should **face out** from the PCB. Bend the cable **down under** the IO PCB and fan the wires to their destination pads according to drawing D210.

Solder the wires ensuring good joints.

Check your work for accuracy. Remove any wire clippings or solder debris.

7. Refit the side trim and then the rear extrusion ensuring front panel is seated correctly.

8. Refit the base. Note the correct orientation, i.e. the foam strips line up with the SLAVE assembly positions.

PRECAUTION: Do not cross thread or overtighten the base screws. These self tap into the aluminium extrusions and steel side brackets.

FITTING THE LABELS

A self-adhesive label block is provided to identify the channels which have been modified. This is important in cases where not all the channels have been modified. You may have a 24 channel console and wish to balance only 16 channels to work with your 16-track multitrack recorder. The label also indicates the operating level of the balanced connections. The standard setting is high level at +4dBu.

9. Place the modified console correct side up. Cut the label block into individual labels as shown dependent on the operating level set. For standard setting cut the label for high level +4dBu. If you have configured the option assemblies for low level operation cut the label to indicate -10dBV. Remove the adhesive backing and stick the labels next to the balanced connectors as shown.

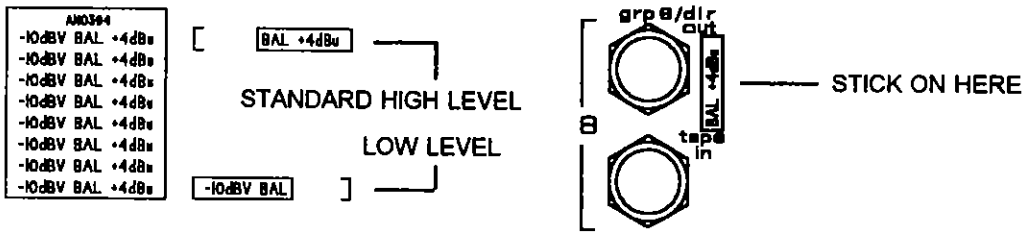

TESTING FOR CORRECT OPERATION

It is recommended that the balanced connections are tested using a dB voltmeter and oscilloscope to test for correct level and phase. With the console group meters set to read '0' using the built-in console oscillator the balanced **GRP/ DIR** outputs should provide a +4dBu output. If configured for low level operation they should provide -8dBu (+10dBV). Signal phase should be correct for jack tip = hot (+), ring = cold (-). To test the balancing function you should measure an inphase signal between tip and sleeve (earth), and an out of phase signal between ring and sleeve. Both these signals should be the same level 6dB lower than balanced output i.e.. -2dBu (-14dBu).
The **TAPE INPUTS** should work correctly with +4dBu (-8dBu) signal input.

If suitable test equipment is not available the option should be tested with the intended multitrack recorder. The level alignment should be correct between console and multitrack with the meters reading '0'. The console oscillator should be used to check this alignment.

NOTE: Remember to check that the correct power supply unit is provided with the modified console This applies to 32 channel **GS3V** consoles as explained previously.

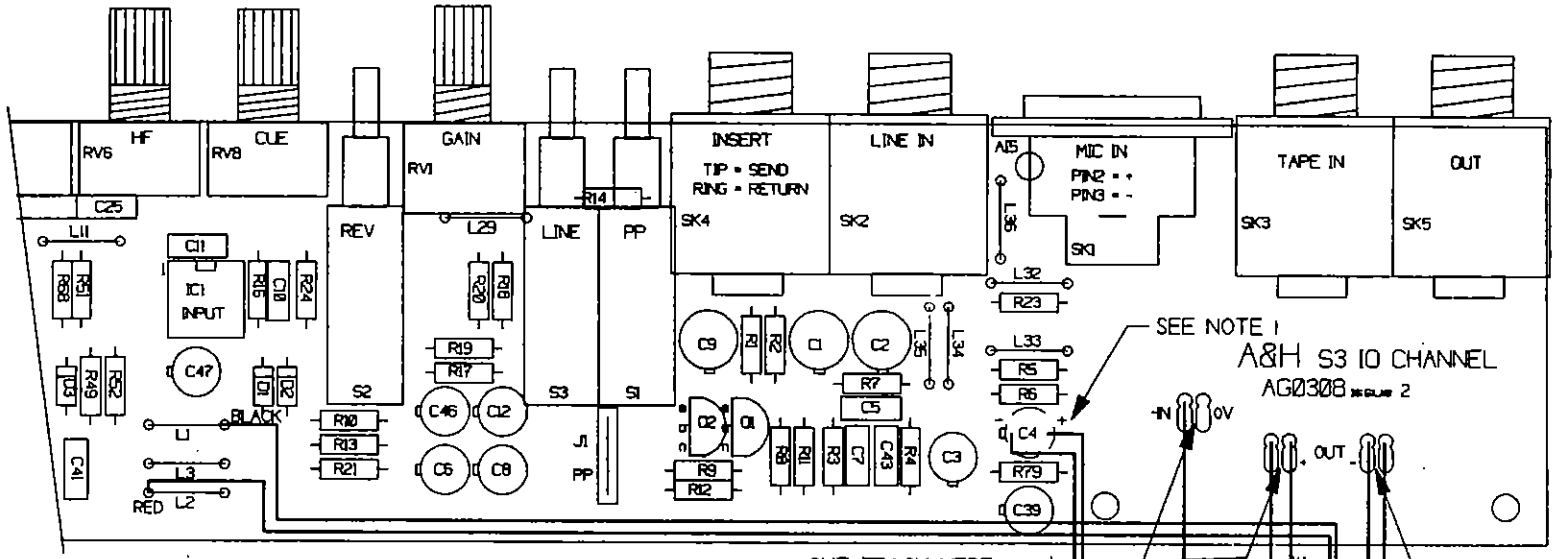

CHANGES TO S3 10 PCB ASSY AG0308 ISS 2 TO BE DONE BEFORE FITTING S3 BAL PCB & WIRING.

1. REMOVE CAPACITOR C4.
2. a. CUT TRACK BETWEEN PADS MARKED -IN & 0V
   b. CUT TRACK BETWEEN PADS MARKED OUT+ & PAD WITH TRACK TO C39.
   c. CUT TRACK BETWEEN PADS MARKED OUT- & PAD CONNECTED TO 0V PLANE.

   ENSURE ELECTRICAL ISOLATION.

TYPICAL PAIR OF PADS SHOWN HERE FROM THE SOLDER SIDE.

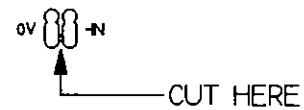

ASSEMBLY INSTRUCTIONS.

DRAWING SHOWS BOTH PCBs ON COMPONENT SIDE. S3 BAL PCB IS CUTAWAY & DISPLACED FOR CLARITY.
WIRE ROUTING IS SCHEMATIC ONLY.

AFTER S3 10 BOARD CHANGES FIT S3 BAL BOARD TO S3 10 BOARD USING FIXINGS.
NOTE CORRECT WAY TO FIT SCREWS.

FIT CABLE CONNECTOR TO S3 BAL AS SHOWN.
SOLDER WIRES TO PADS ON S3 10 AS INDICATED IN THIS DRAWING USING THE WIRE COLOURS SHOWN.
ENSURE AFTER SOLDERING WIRES THAT CONNECTOR WILL DISENGAGE FROM S3 BAL PCB.

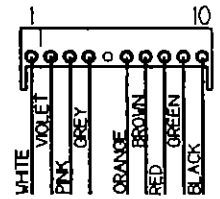

WIRE COLOURS AT CONNECTOR

ISS.	REVISION	BY	DATE	NOTES
1	ORIGIN	DRP	8-10-93	

GS3
BALANCED MULTITRACK OPTION

FITTING INSTRUCTIONS
FOR CONSOLES WITH
S3 10 AG0308 ISSUE 2 BOARDS.

MANUFACTURED IN ENGLAND BY
ALLEN & HEATH

DRAWING No D210 Sheet 2 of 3 ISSUE 1 A4

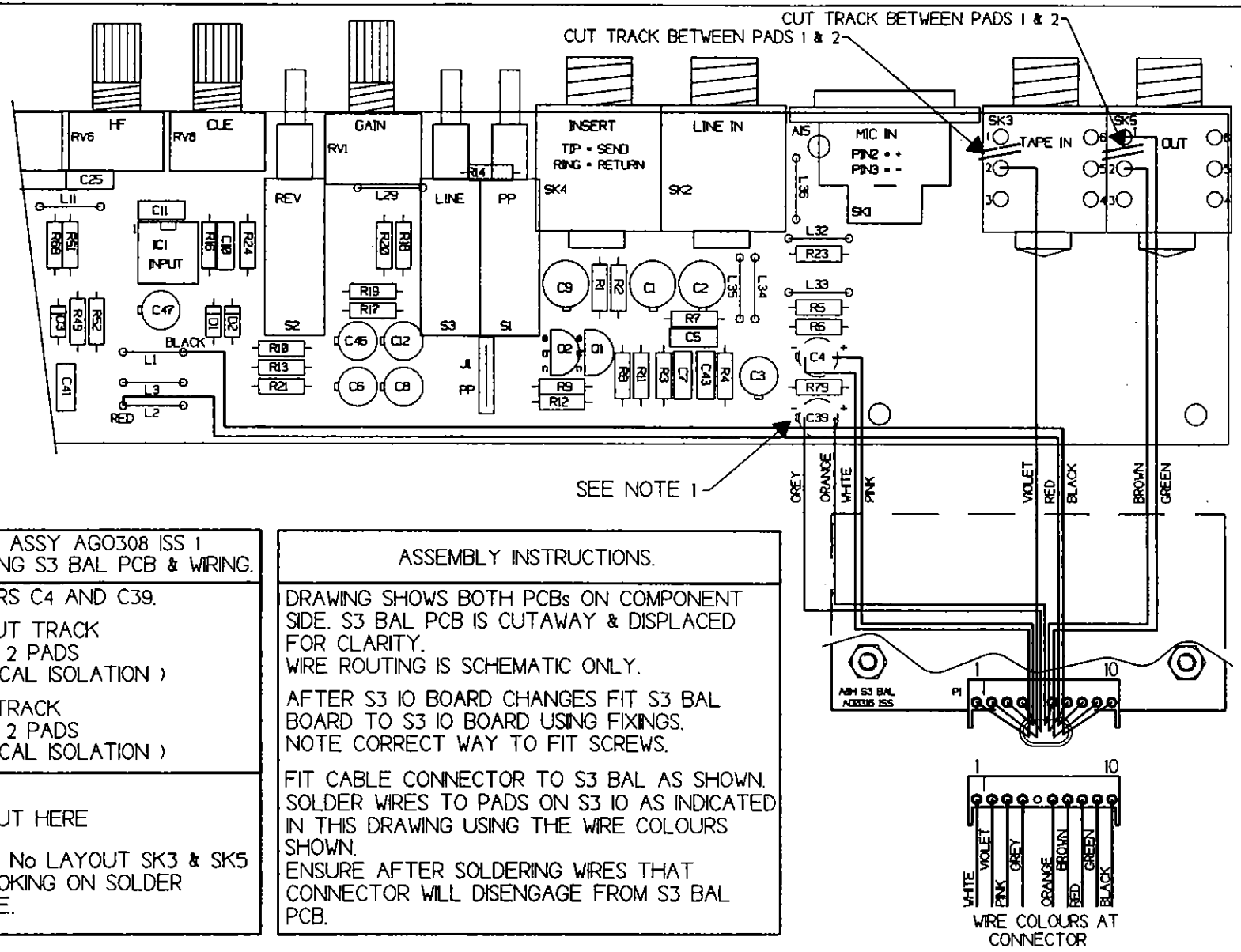

CHANGES TO S3 IO PCB ASSY AG0308 ISS 1 TO BE DONE BEFORE FITTING S3 BAL PCB & WIRING.

1. REMOVE CAPACITORS C4 AND C39.
2. SK3 (TAPE IN) - CUT TRACK BETWEEN PINS 1 & 2 PADS (ENSURE ELECTRICAL ISOLATION)
3. SK5 (OUT) - CUT TRACK BETWEEN PINS 1 & 2 PADS (ENSURE ELECTRICAL ISOLATION)

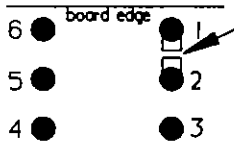

PIN No LAYOUT SK3 & SK5 LOOKING ON SOLDER SIDE.

ASSEMBLY INSTRUCTIONS.

DRAWING SHOWS BOTH PCBs ON COMPONENT SIDE. S3 BAL PCB IS CUTAWAY & DISPLACED FOR CLARITY.
WIRE ROUTING IS SCHEMATIC ONLY.

AFTER S3 IO BOARD CHANGES FIT S3 BAL BOARD TO S3 IO BOARD USING FIXINGS. NOTE CORRECT WAY TO FIT SCREWS.

FIT CABLE CONNECTOR TO S3 BAL AS SHOWN. SOLDER WIRES TO PADS ON S3 IO AS INDICATED IN THIS DRAWING USING THE WIRE COLOURS SHOWN.
ENSURE AFTER SOLDERING WIRES THAT CONNECTOR WILL DISENGAGE FROM S3 BAL PCB.

ISS.	REVISION	BY	DATE	NOTES
1	ORIGIN	DRP	8-10-93	

GS3
BALANCED MULTITRACK OPTION

FITTING INSTRUCTIONS
FOR CONSOLES WITH
S3 IO AG0308 ISSUE 1 BOARDS.

MANUFACTURED IN ENGLAND BY
ALLEN & HEATH

DRAWING No D210 Sheet 3 of 3 ISSUE 1 A4

This section provides information for identifying and ordering spare or replacement parts for the GS3 and GS3V range of consoles. The diagram below shows the major assemblies. Refer also the **PARTS STRUCTURE** and **INTERNAL LAYOUT** drawings in **PART C** of this manual.

Please quote the console model and serial numbers when ordering parts.

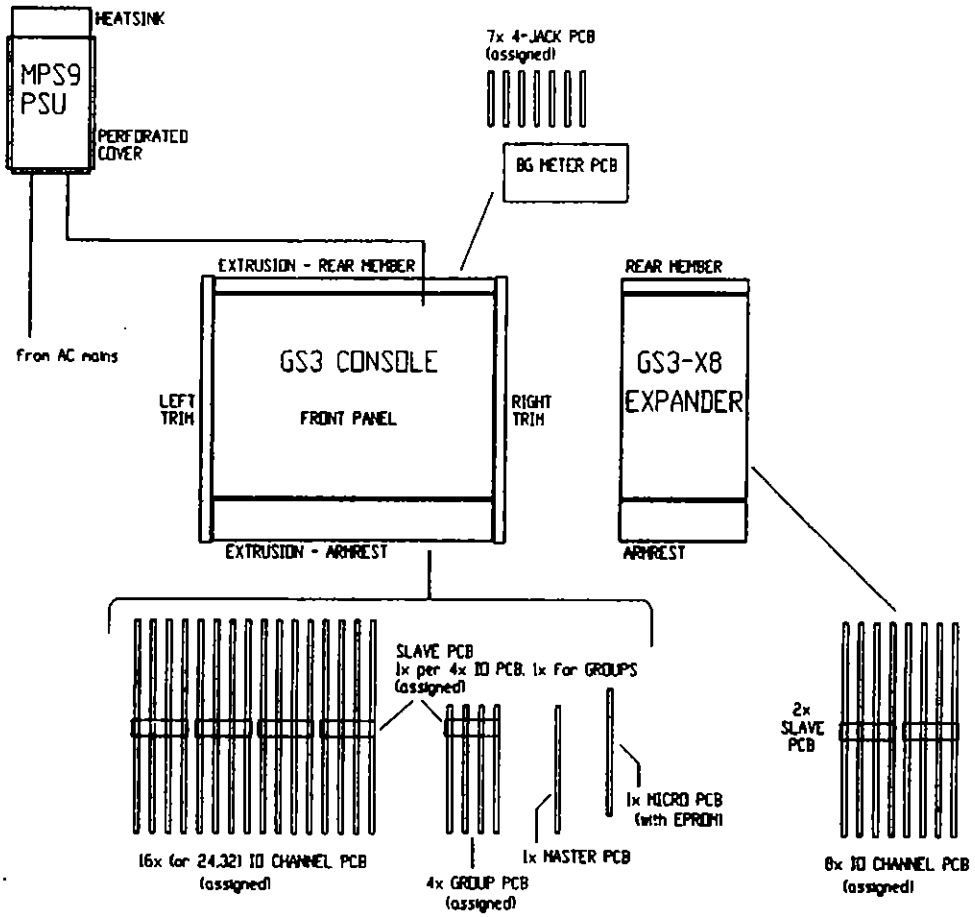

GS3-24

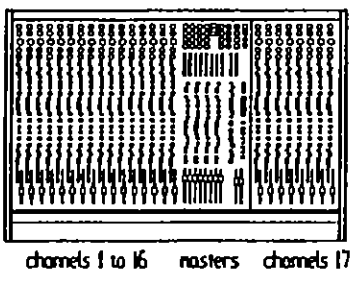

GS3-16

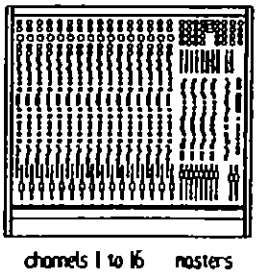

GS3-24+X8

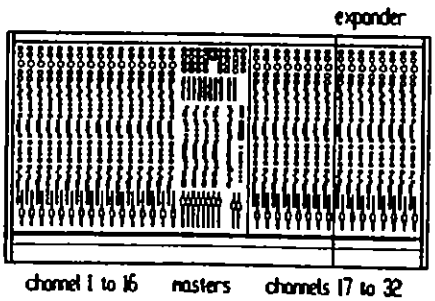

ORDERING A CONSOLE: To order a new console, please specify the model number and AC mains input voltage required for the MPS9 power supply unit.

MODEL	DESCRIPTION	ORDER CODE
GS3-16	16 I/O channel console + MPS9 (volts?)	ZZ-S3-001
GS3-24	24 I/O channel console + MPS9 (volts?)	ZZ-S3-002
GS3-X8	8 I/O channel expander kit	ZZ-S3-003
GS3V-16	16 I/O channel console + MPS9 (volts?)	ZZ-S3V-001
GS3V-24	24 I/O channel console + MPS9 (volts?)	ZZ-S3V-002
GS3V-X8	8 I/O channel expander kit	ZZ-S3V-003

REPLACEMENT POWER SUPPLY UNIT

MODEL	DESCRIPTION	ORDER CODE
MPS9	Power supply unit (specify 220V or 240V)	ZS700-711
MPS9	Power supply unit (specify 100V or 110V or 120V)	ZS700-712
RPS5	Power supply unit (specify 110V or 120V)	ZX400-606
RPS5	Power supply unit (220V)	ZX400-605
RPS5	Power supply unit (240V)	ZX400-608

ORDERING AN ASSEMBLY: The following assemblies are supplied fully tested. Please note that several of these need to be assigned according to their intended position in the console. This is done by soldering wire links or assignment pads. Please refer to the relevant diagrams in PART C of this manual for details. It is best to check the assignment settings of the assembly you are replacing before removing it from the console.

GS3(V) **denotes assemblies, options and components compatible with all models in the GS3 range.**

DESCRIPTION	ORDER CODE
GS3-16 V5 VCA automation Upgrade kit	ZZ-S3UP-001
GS3-24 V5 VCA automation Upgrade kit	ZZ-S3UP-002
GS3-32 V5 VCA automation Upgrade kit	ZZ-S3UP-003
GS3-X8 V5 VCA automation Upgrade kit	ZZ-S3UP-004
GS3(V) Balanced Multitrack Option	ZZ-S3-MB8
GS3V SMPTE Module Option	ZX000-708

PRINTED CIRCUIT (PCB) ASSEMBLIES:

*** specify GS3, GS3 V5 Upgrade or GS3V when ordering spare or replacement assemblies.**

MODEL	DESCRIPTION	ORDER CODE
GS3	I/O PCB assembly	(assign)ZX000-705*
GS3(V)	Group PCB assembly	(assign)ZX000-706
GS3(V)	Slave PCB assembly	(assign)ZX000-106
GS3	Master PCB assembly	ZX000-103*
GS3(V)	4 Jack Connector PCB assembly	(assign)ZX000-007

GS3	Micro PCB assembly		ZX000-105
GS3(V)	Baragraph Meter PCB assembly		ZX000-104
GS3V	V-Micro assembly (includes V-PROM assembly)		ZX000-707
GS3V	Keyboard PCB assembly		ZX000-228
GS3V	Channel VCA PCB assembly	(assign)	ZX000-226
GS3V	VCA Slave PCB assembly	(assign)	ZX000-222
GS3	V5 Upgrade V-Micro assembly (with V-PROM assembly)		ZX000-246
GS3	V5 Upgrade Keyboard PCB assembly		ZX000-240
GS3	V5 Upgrade Channel VCA PCB assembly	(assign)	ZX000-242
GS3	V5 Upgrade VCA Slave PCB assembly	(assign)	ZX000-241
GS3V	SMPTE PCB assembly (also V5 Upgrade)		ZX000-238
GS3(V)	Balanced Multitrack Option PCB assembly		ZX000-709
MPS9	Power Supply PCB assembly		ZS700-012

RIBBON HARNESS ASSEMBLIES:

MODEL	DESCRIPTION	ORDER CODE
GS3(V)	C16 40-way Main Harness	ZX000-112
GS3	C16 16-way Slave Harness	ZX000-113
GS3(V)	C24 40-way Main Harness	ZX000-114
GS3	C24 CH1-16 16-way Slave Harness	ZX000-113
GS3(V)	C24 CH17-24 16-way Slave Harness	ZX000-118
GS3(V)	X8 40-way Main Harness	ZX000-117
GS3(V)	X8 16-way Slave Harness	ZX000-118
GS3V	C16 16-way Slave Harness (including V5 Upgrade)	ZX000-236
GS3V	C24 CH1-16 16-way Slave Harness (inc. V5 Upgrade)	ZX000-236
GS3V	C16 VCA Slave Harness (including V5 Upgrade)	ZX000-223
GS3V	X8 VCA Slave Harness (including V5 Upgrade)	ZX000-224
GS3V	C24 CH1-16 VCA Slave Harness (including V5 Upgrade)	ZX000-223
GS3V	C24 CH17-24 VCA Slave Harness (including V5 Upgrade)	ZX000-224

THE CHASSIS TRIM:

MODEL	DESCRIPTION	ORDER CODE
GS3(V)	Left and right side trims	AA1132L/R
GS3(V)	C16 Chassis extrusion (armrest/rear)	AA1133
GS3(V)	C24 Chassis extrusion (armrest/rear)	AA1134
GS3(V)	X8 Chassis extrusion (armrest/rear)	AA1143

MANUALS AND SUPPORT DOCUMENTATION:

GS3	Owners Manual	AP0122A
GS3V	Owners Manual	AP0172
GS3V	Automation Systems Manual	AP0140
GS3(V)	Service Manual (includes Options)	AP0123
GS3(V)	Hi Level Multitrack Option sheet	AP0134
GS3-X8	Expander fitting sheet	AP0135
GS3V-X8	Expander fitting sheet	AP0143
GS3V	SMPTE Option User Manual	AP0141
GS3	V5 Upgrade Installation Manual	AP0189
GS3	V5 Upgrade User Manual	AP0188
GS3(V)	Balanced Option fitting instructions	AP0206

SOFTWARE UPGRADE: There are two types of software fitted depending on the type of console:

Standard GS3 - V4 *plus* Mute Automation software

GS3V & GS3 V5 Upgrade - V5 Automation software.

To order a replacement EPROM please contact ALLEN & HEATH and notify us of your console serial number, its present EPROM version and code number, and reason for the replacement.

SERVICE TOOLS: The tools required to service the GS3 range of consoles are standard to an electronics service workshop and are easily obtainable. The following items are necessary for full disassembly and service access:

4mm Hexagon (Allen) key (M6 side trim)	AT0033
1-point Crosshead screwdriver (M3, 4AB)	AT0004
2-point Crosshead screwdriver (M4, 6AB)	AT0002
10mm Nutdriver (small pot nuts)	AT0003
11mm Nutdriver (large pot nuts)	AT0023
15mm Nutdriver (jack nuts)	

ORDERING A STANDARD SPARES KIT - (A)

Order code: **ZX000-120**

It is recommended that this kit of parts is held and maintained by the service agent to enable in-field service repairs to this range of consoles by component replacement independent of the ALLEN & HEATH factory. This component kit is supplied in a cabinet of drawers. Commonly available items such as resistors, capacitors, tools and soldering equipment are not included.

Individual spare parts from the following list may be ordered. Please quote the description and order code for the part required.

ORDERING A GS3 TOP-UP SPARES KIT - (B)

Order code: **ZX000-121**

If you are a service agent who already stocks spare parts for the ALLEN & HEATH SABER range of consoles, you may already stock some of the common parts used on the GS3 range. The TOP-UP kit provides just the parts unique to this range.

Below is a list of the components supplied with each kit.

(A) - STANDARD SPARES KIT (ZX000-120)

(B) - GS3 TOP-UP SPARES KIT (ZX000-121)

DESCRIPTION	ORDER CODE	(A) QTY	(B) QTY
Fader parts:			
Fader - Alps 100mm travel, 10k ohm log	AI0144	5	5
Fader knob - 11mm wide, white	AJ0384	5	5
Fader screw - M3 x 6mm PAN	AB0073	10	10
Fader spacer - M3 clearance x 3mm	AB0254	10	10

DESCRIPTION	ORDER CODE	A QTY	B QTY
Fixings:			
Cable tie - 150 x 2.5mm (SLAVE fixing)	AK0332	20	20
Countersunk M6 HEX bolt (SIDE TRIMS)	AB0310	5	5
Pan 6AB screw (base fixing)	AB0170	10	-
Countersunk 4AB screw (panel fixing)	AB0059	10	-
Pan 4AB screw (PCB fixing)	AB0057	10	-
Pan M4 taptite screw (expander fixing)	AB0271	10	-
M6 joining stud (expander fixing)	AB0325	-	-
Joint block - nylon A138 (PCB fixing)	AB0253	5	-
Rotary knobs and caps:			
Rotary knob - small (dual top) grey	AJ0058	10	-
Rotary knob - large (dual bottom) grey	AJ0059	10	10
Cap - C111 Red + white line	AJ0063	10	-
Cap - C111 Brown + white line	AJ0065	10	10
Cap - C111 Blue + white line	AJ0066	10	-
Cap - C111 Grey + black line	AJ0064	10	-
Cap - C111 Green + white line	AJ0061	10	-
Buttons:			
Square Red 12.5mm (mute keypad)	AJ0300	5	-
Rectangular Grey 10x5mm	AJ0093	5	-
Rectangular White 10x5mm	AJ0094	5	-
Rectangular Red 10x5mm	AJ0095	5	-
Square Grey 5mm (routing)	AJ0363	5	5
Square White 5mm (L-R)	AJ0373	5	5
Square Red 5mm (+48V switch)	AJ0364	5	5
Potentiometers:			
10kC+10kA AHB-11 (Channel GAIN)	AI0061	2	2
10kBcc AHB-1 (PAN)	AI0051	2	-
100kCx2+10kBcc AHB-10 (Channel MF & LF)	AI0060	2	2
100kBcc AHB-2 (Channel HF, Monitor HF & LF)	AI0052	2	-
100kAx2 dual AHB-6 (FX SENDS)	AI0056	2	-
100kA AHB-4 (Chan,Mon CUE, FX MASTER)	AI0054	2	-
10kAx2 AHB-18 (RETURN GAIN)	AI0119	2	-
100kAx2 AHB-5 (STEREO RTN LEVEL & CUE, CUE MASTER, STEREO CUE LEV, C/room LEVEL)	AI0055	2	-
100kBccx2 AHB-12 (Return HF & LF)	AI0118	2	-
10kBcc+100kA dual AHB-8 (Mon lev/pan)	AI0058	2	2
10kA AHB-16 (Osc, Talkback)	AI0131	2	-
Switches:			
2PCO momentary (MUTE)	AL0374	5	-
2PCO latching (general)	AL0162	5	-
Connectors:			
Jack socket stereo switched	AL0009	5	-
3-pin XLR Female 90deg PC(MIC)	AL0502	2	-
5-pin DIN 180deg female (MIDI)	AL0095	2	-
5-pin XLR chassis male (DC INPUT)	AL0017	-	-
LEDs:			
T1 round - Red	AE0086	5	-
T1 round - Yellow	AE0084	5	-
4 segment bar - Green	AE0303	2	2

DESCRIPTION	ORDER CODE	A QTY	B QTY
4 segment bar - Red	AE0304	2	2
2 segment bar - Green	AE0306	2	2
Integrated circuits:			
TL072P Dual Operational Amplifier	AE0046	10	2
NE5532 Dual Operational Amplifier	AE0221	10	2
80C32 microprocessor	AE0312	-	-
6264 RAM memory	AE0224	-	-
4051B CMOS 8 channel Multiplexer	AE0118	2	-
4053B CMOS triple 2 Channel Multiplexer	AE0117	-	-
4099B CMOS 8 bit Addressable Latch	AE0238	2	-
74LS05N TTL Hex Inverter O/C	AE0093	-	-
74LS138N TTL 3 to 8 Decoder	AE0248	-	-
74LS373N TTL Octal Latch	AE0140	-	-
LM339 Quad comparator (BG meter)	AE0071	2	1
6N136 Opto isolator (MIDI)	AE0222	1	-
4N35 Opto isolator (footswitch)	AE0266	1	1
7805 5V regulator	AE0308	1	-
SSM2142P Balanced Output Driver	AE0302	1	1
Transistors:			
BC549 NPN general purpose	AE0020	10	10
BC214C PNP	AE0031	10	2
J111 FET (MUTE element)	AE0083	5	-
2N4403 PNP low noise (MIC pre-amp)	AE0273	10	-
BC637 NPN (headphones)	AE0068	2	-
BC638 PNP (headphone)	AE0037	2	-
Battery NiCad 3.6V 100mA/hr	AP0019	1	-

MPS9 POWER SUPPLY

Mains fuse 1 Amp T 20x5mm (UK, EUROPE)	AL0305	5	-
Mains fuse 3 Amp T 1 1/4" (USA, JAPAN)	AL0315	5	-
Fuse insert 20x5mm (UK, EUROPE)	AL0314	1	-
Fuse insert 1 1/4" (USA,JAPAN)	AL0313	1	-
Fuse holder (universal)	AL0312	-	-
Torroidal transformer A117	AM0023	-	-
Bridge rectifier 3 Amp	AE0206	1	-
IC regulator +15V 7815	AE0047	2	-
IC regulator -15V 7915	AE0048	2	-
IC regulator +48V 783	AE0214	1	-
IC insulating kit (washer+bush)	AA0693	5	-
5-pin XLR female inline	AL0049	-	-
MPS9 Label write-on	AN0204	-	-
4AB Pan screw (cover to chassis)	AB0057	-	-
M3 Pan Taptite screw (cover to h/sink)	AB0071	5	-

SERVICE TOOLS

4mm HEX (Allen) key	AT0033	1	1
1-point crosshead screwdriver	AT0004	1	-
2-point crosshead screwdriver	AT0002	1	-
Ring spanner 10mm	AT0003	1	-
Ring spanner 11mm	AT0023	1	-

ORDERING A GS3V TOP-UP SPARES KIT

Order code: **ZX000-227**

If you are a service agent who already stocks spare parts for the ALLEN & HEATH SABER and GS3 range of consoles, you may already stock some of the common parts used on the GS3V range. The GS3V TOP-UP kit provides just the parts special to this range.

DESCRIPTION	ORDER CODE	QTY
Integrated Circuits:		
SSM2018P Voltage Controlled Amplifier	AE0315	10
SSM2300P Octal Sample & Hold	AE0316	1
4066B Quad Switch	AE0116	1
Transistors:		
ZTX107B NPN (Sample & Hold Switch)	AE0019	1
LEDs:		
Triangular Green Hi Effiency	AE0338	16
Fader Parts:		
Fader screw - M3 x 8mm Countersunk	AB0074	16
Fader spacer - M3 x 4.5mm	AB0331	16
Fixings:		
Plastic Rivets SR3055	AB0338	10
Pillar - M3 x 15mm (VCA Slave PCB)	AB0294	2
Pan Screw - M3 x 8mm	AB0073	4
Buttons:		
Square Black 12.5mm (Function Keys)	AJ0348	7
Battery NiCad 2.4V 100mA/hr	AP0158	1
Preset 500K Horizontal (Channel VCA PCB)	AC0362	10

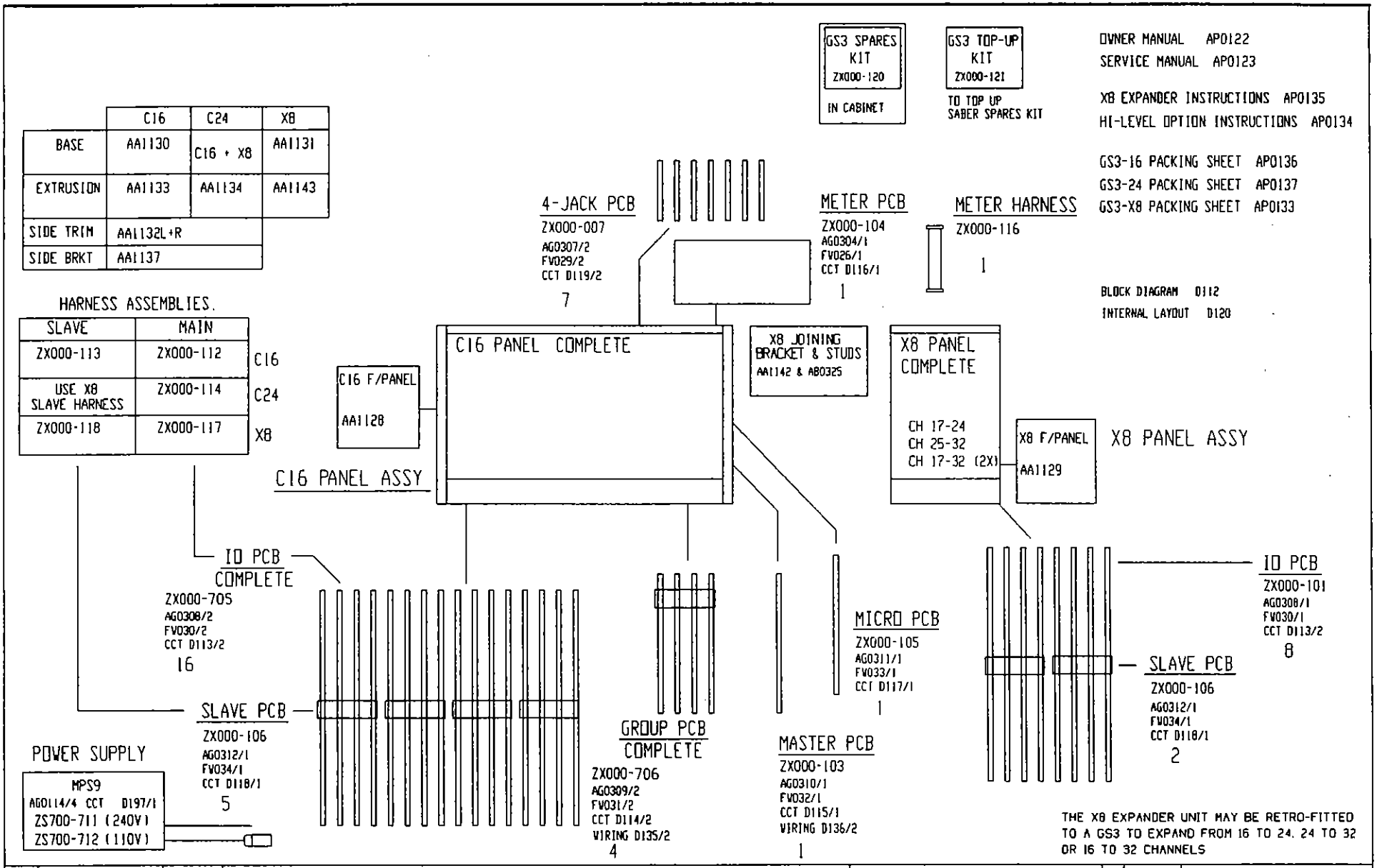

ISSUE	REVISION	BY DATE
P2	SIDE BRKT ADDED & METER ACRYLIC REMOVED	[illegible] 14-10-91
1	X8 DETAILS ADDED.	[illegible] 9-12-91
2	SPARES KITS ADDED	[illegible] 16-1-92
3	A1 ASSEMBLIES ADDED	AL. 1-10-92
4	IO & GROUP PCBS UPISSUED	[illegible] 30/3/93
5	DRAWING ISSUES CHANGED	RM 13-10-93

FORMATTED ASSEMBLIES

		110V	220V	240V
C16	ZZ-S3-001	/1	/2	/3
C24	ZZ-S3-002	/1	/2	/3
X8	ZZ-S3-003			

DRAWING TITLE

GS3 RECORDING CONSOLE PARTS STRUCTURE

PRODUCTION

ALLEN & HEATH LTD

DRAWING No. D111 ISSUE 5

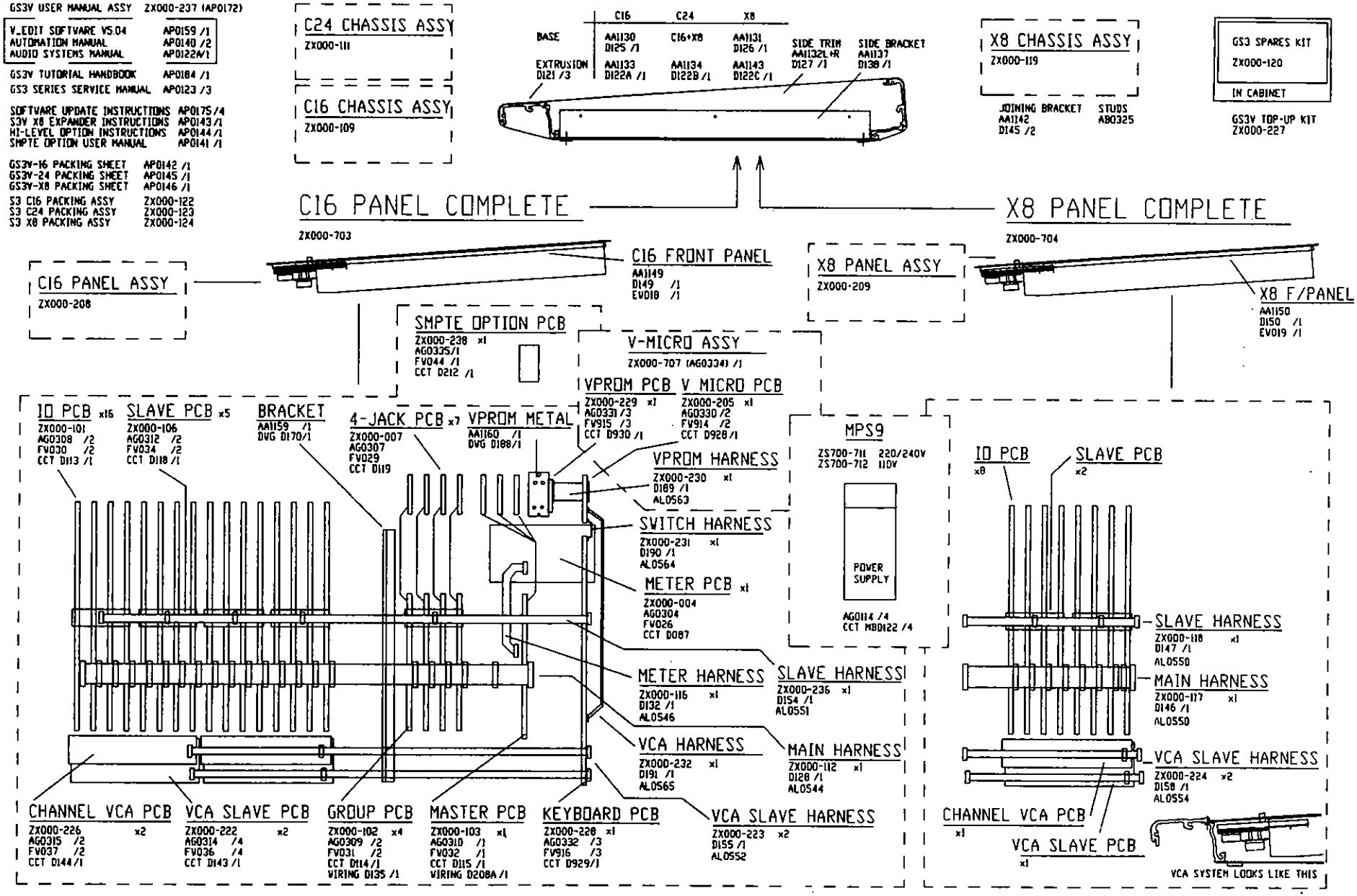

ISSUE	REVISION	BY DATE
1	PRODUCTION ISSUE	IHS 1-9-92
2	SMPTE OPTION ADDED	IHS 10-3-92
3	MANUALS UP-ISSUED.	IMcB 1-11-93

FORMATTED ASSEMBLIES

			110V	220V	240V
C16	ZZ-S3V-001		/1	/2	/3
C24	ZZ-S3V-002		/1	/2	/3
X8	ZZ-S3V-003				

PRODUCT NAME = GS3V
INTERNAL NAME = S3V
PRODUCT GROUP = S7
COMPLETE ASSEMBLIES = ZX000-703 ETC
SUB ASSEMBLIES = ZX000-208 ETC

GS3V
PARTS STRUCTURE

ALLEN & HEATH LTD
DRAWING No D151 ISSUE 3

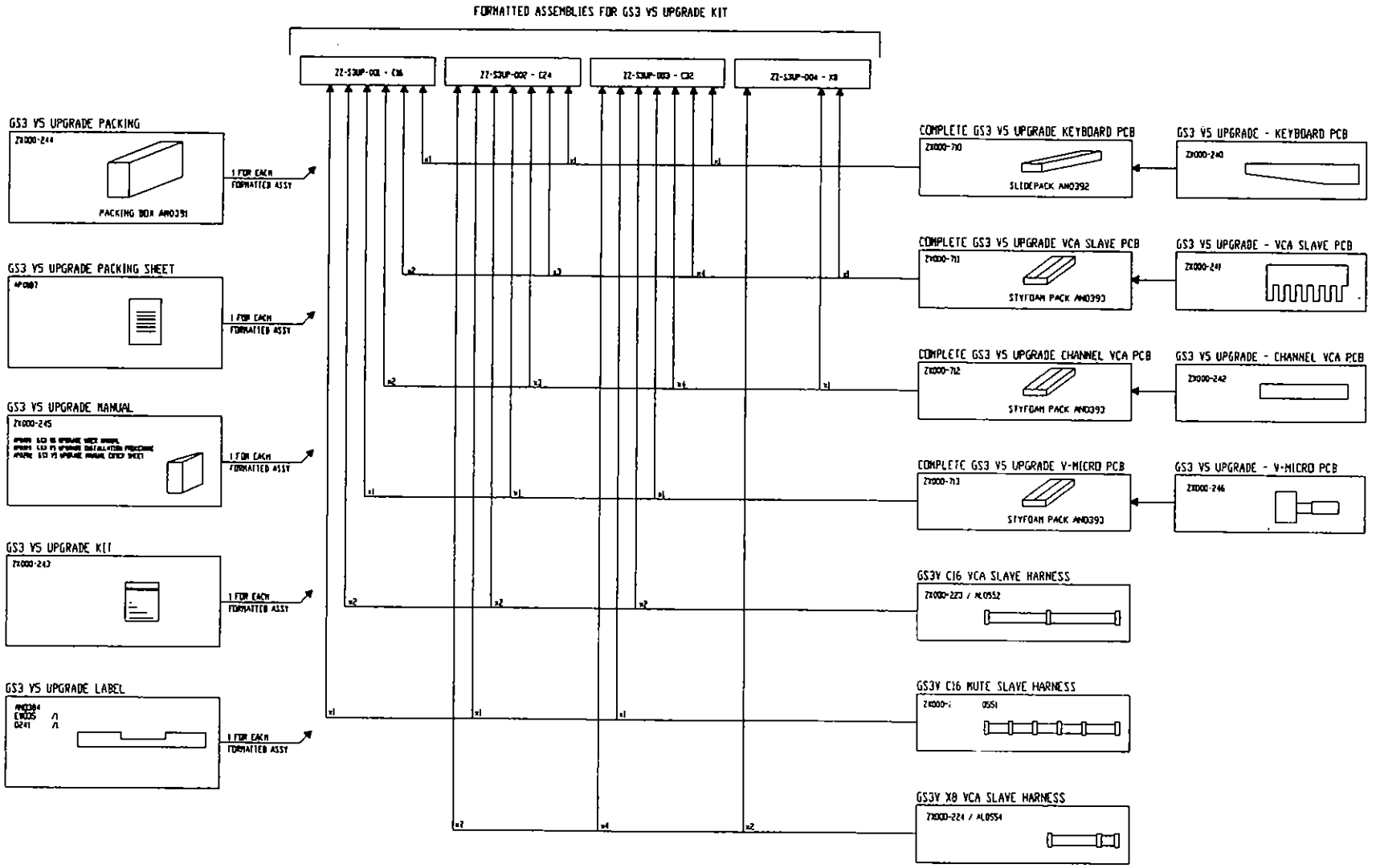

ISSUE	REVISION	BY	DATE
1	PRODUCTION ISSUE		INS 14-6-93

FORMATTED ASSEMBLIES

C16	ZZ-S3UP-001
C24	ZZ-S3UP-002
C32	ZZ-S3UP-003
X8	ZZ-S3UP-004

PRODUCT NAME = GS3 V5 UPGRADE
INTERNAL NAME = S3V S3-UP
PRODUCT GROUP = 57

GS3 V5 UPGRADE

PARTS STRUCTURE

ALLEN & HEATH LTD

DRAWING No. D240 ISSUE 1

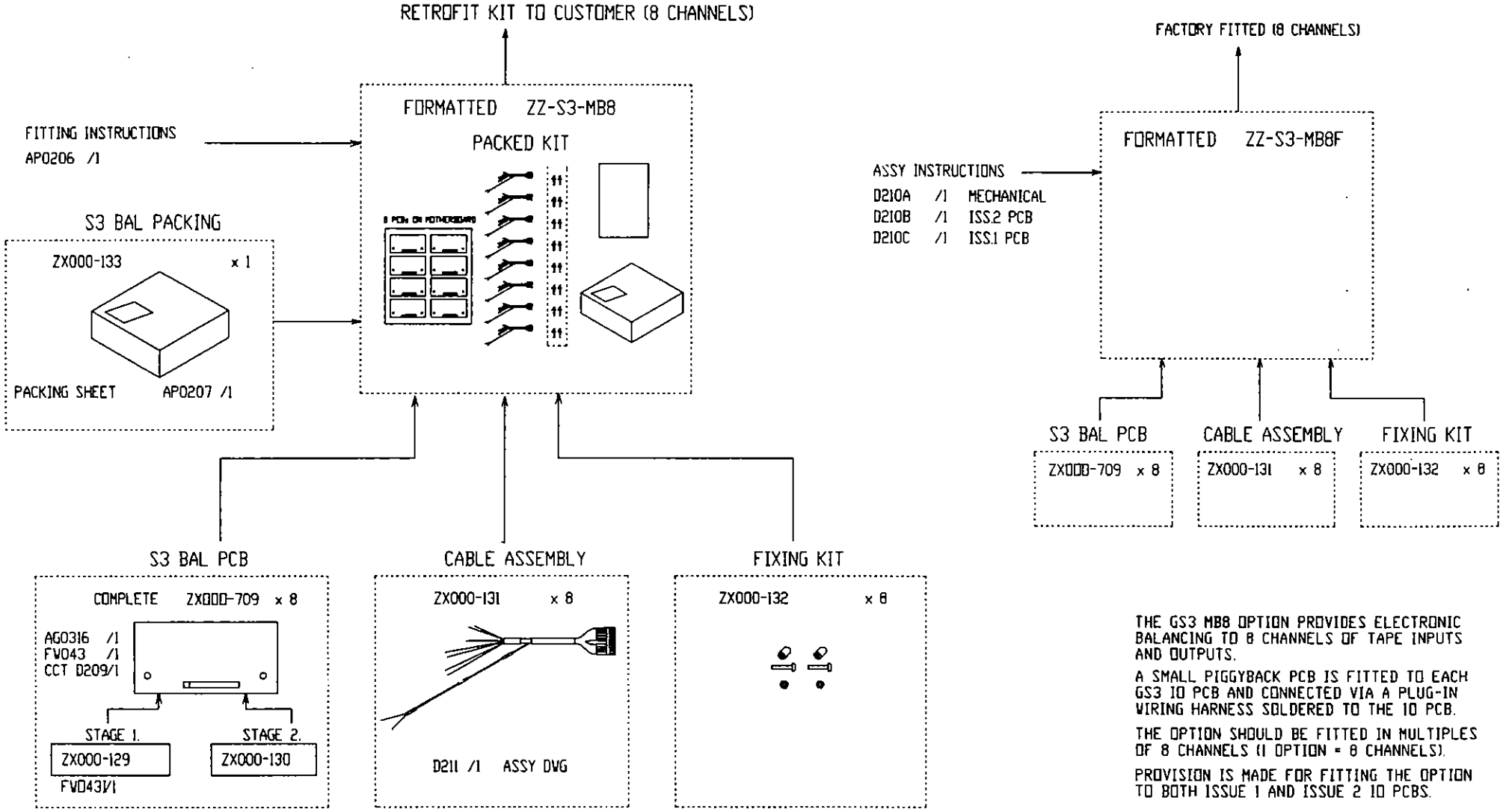

THE GS3 MB8 OPTION PROVIDES ELECTRONIC BALANCING TO 8 CHANNELS OF TAPE INPUTS AND OUTPUTS.

A SMALL PIGGYBACK PCB IS FITTED TO EACH GS3 IO PCB AND CONNECTED VIA A PLUG-IN WIRING HARNESS SOLDERED TO THE IO PCB.

THE OPTION SHOULD BE FITTED IN MULTIPLES OF 8 CHANNELS (1 OPTION = 8 CHANNELS).

PROVISION IS MADE FOR FITTING THE OPTION TO BOTH ISSUE 1 AND ISSUE 2 IO PCBS.

THE BALANCE PCBS ARE SUPPLIED AS STANDARD TO CONVERT A LOW LEVEL (-10dBV) GS3 TO HIGH LEVEL (+4dBu)

ISSUE	REVISION	BY	DATE
A	ORIGIN	DRP	1-10-93

ZZ-S3-MB8 RETROFIT OPTION
ZZ-S3-MB8F FACTORY OPTION
COMPLETE ASSEMBLIES ZX000-709 etc
SUB-ASSEMBLIES ZX000-129 etc

DRAWING TITLE
GS3 MB8
BALANCED MULTITRACK OPTION
PARTS STRUCTURE

ALLEN & HEATH
ALLEN & HEATH LTD
KERNICK INDUSTRIAL ESTATE,
PENRYN, CORNWALL TR10 9LU
TEL 0326 372070
FAX 0326 377097

DRAWING No D249 ISSUE A A2

TECHNICAL BULLETIN

Attention Service Departments

REF. GS3V_01	Issue No. 1	Date: 18-3-93	Page: 1 of: 1
Title: Modifications to Pre-production GS3Vs.			Authorised: INS & IMcB

File with GS3 Series Service Manual

The following applies to all GS3V consoles up to serial no 590010P.

1) GS3V FOOTSWITCH

The legend on the Keyboard PCB (AG0332 Issue 3) for the footswitch connector is incor rect so that the ring and sleeve connections for the footswitch are reversed. This could result in incorrect operation of the footswitch.
To correct this error simply swap the ring & sleeve wires either on the Keyboard PCB, or on the footswitch jack.

2) GS3V VCA SLAVE PCB

The mounting lugs on fader RV7 are touching the PCB. These lugs could short to the PCB tracks causing failure. To remedy the error either cut off, or bend the lugs clear of the PCB. To do this the PCB must be removed from the console. Follow the section on GS3V Fader Replacement in the GS3 Series Service Manual for guidance on removing this PCB.

INS 18/03/93

TECHNICAL BULLETIN

Attention Service Departments

REF. GS3V_02	Issue No. 1	Date: 24/3/93	Page: 1 of: 1
Title: ***GS3V - VCA GAIN CHANGE***		Authorised: CD	

File with GS3 Series Service Manual

The following change applies from **GS3V** console **SERIAL NUMBER 590031** on (except 590037 and 590042):

The VCA circuit gain is increased by 10dB and the post-fade buffer gain is reduced by 10dB to shift the top of fader +10dB gain into the VCA stage. This results in improved post-fade noise performance and also shifts the minimum distortion point to fader position "0" (previously "+10"). This change applies to the channel and master L-R faders and affects the IO, VCA Slave, Master, and Keyboard PCB assemblies. Consoles prior to the above serial numbers may be modified without removal of these assemblies. Refer to the circuits and layouts in the GS3 SERVICE MANUAL AP0123.

MODIFYING THE CHANNEL FADER GAIN

IO CHANNEL ASSEMBLIES - Circuit D113, PCB AG0308

Change post-fade IC4 resistor R97 from 47k to 15k. On built consoles do this by fitting a 22k resistor across the existing 47k. This reduces the post-fade gain by 10dB to 0dB. Unplug the IDC harness to gain access to this component.

VCA SLAVE ASSEMBLIES - Circuit D144, PCB AG0315

Add a 150k resistor on the solder side from pin 11 to pin 16 of each VCA IC1 to IC8 to introduce negative offset which provides a VCA gain of +10dB. Unscrew the VCA SLAVE assemblies from the FADER SLAVE assemblies to gain access. Be careful not to disturb the distortion trim preset settings.

MODIFYING THE L-R FADER GAIN

MASTER ASSEMBLY - Circuit D115, PCB AG0310

Change post-fade IC2 resistors R10 and R13 from 27k to 8.2k to reduce the L-R post-fade gain by 10dB to 0dB. On built consoles do this by fitting a 12k resistor across the existing 27k resistor.

KEYBOARD ASSEMBLY - Circuit D929, PCB AG0332

Add a 150k resistor on the solder side from pin 11 to pin 16 of just VCA IC10. (Do not do this for IC11). Be careful not to disturb the distortion trim preset settings.

CHECKING YOUR WORK

Inspect all solder connections for good joints and accuracy, and remove any debris. Refit the SLAVE assemblies and reconnect the IDC harnesses checking for correct pin alignment and seating. Refit the base and power up the console.

Test each channel by injecting a +10dBu 1kHz sinewave into the LINE input and first setting the gain to 0dB by measuring the channel INSERT. Press DIR and set the fader to position "0". Test for a +2dBu (+14dBu if HI option fitted) signal at the GRP/DIR output. Test for correct gain and fader law on all channel faders.

Test the L-R fader by routing a channel first to L with the channel and L-R faders set to "0" and PAN full left. Test for a +2dBu signal at the L-R left output (tip). Check the fader gain and law. Repeat for the right output (PAN full right, ring circuit).

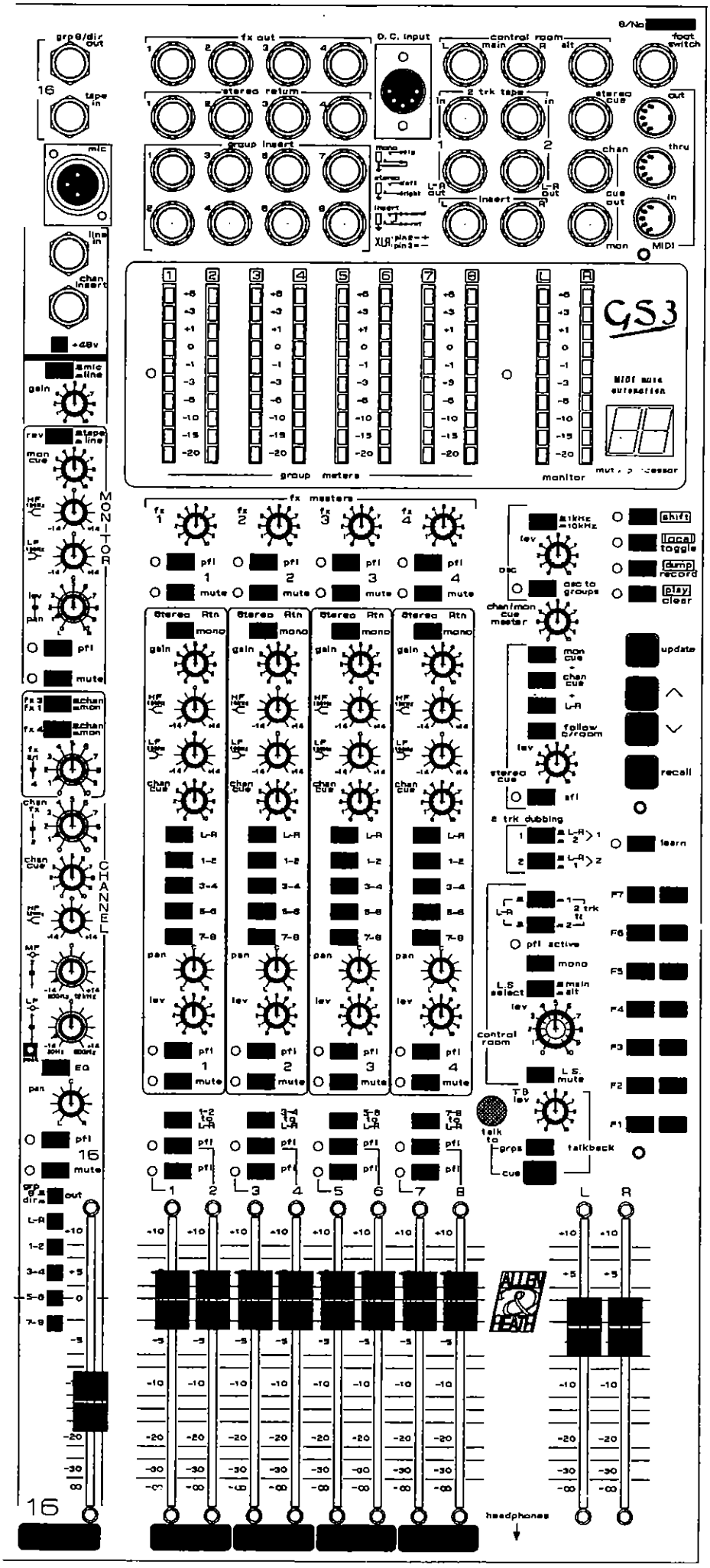

GS3
MIDI mute automation
group meters
monitor
fx masters
MONITOR
CHANNEL
ALLEN & HEATH
headphones

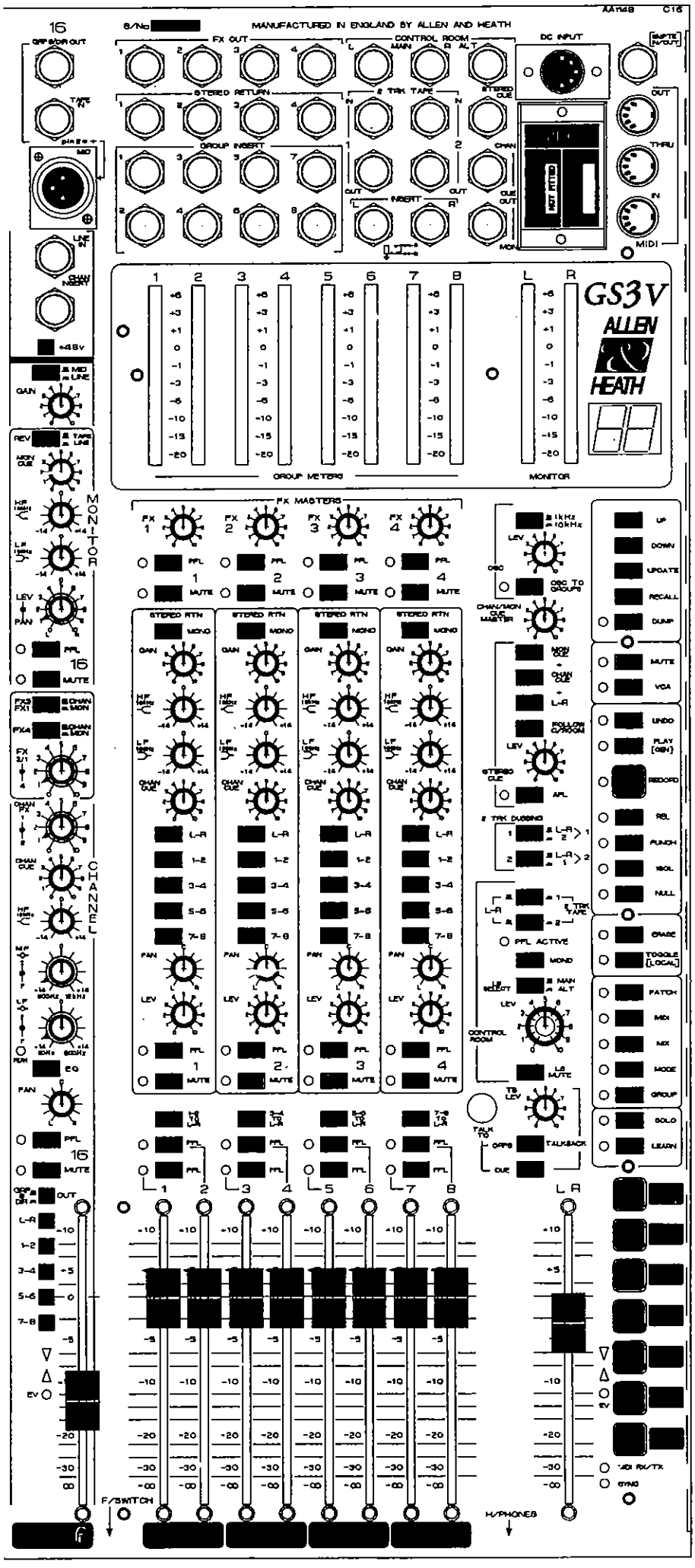
MANUFACTURED IN ENGLAND BY ALLEN AND HEATH
FX OUT
CONTROL ROOM
DC INPUT
STEREO RETURN
2 TRK TAPE
GROUP INSERT
INSERT
GS3V
ALLEN
HEATH
GROUP METERS
MONITOR
FX MASTERS
STEREO RTN
MONITOR
CHANNEL
F/SWITCH
H/PHONES

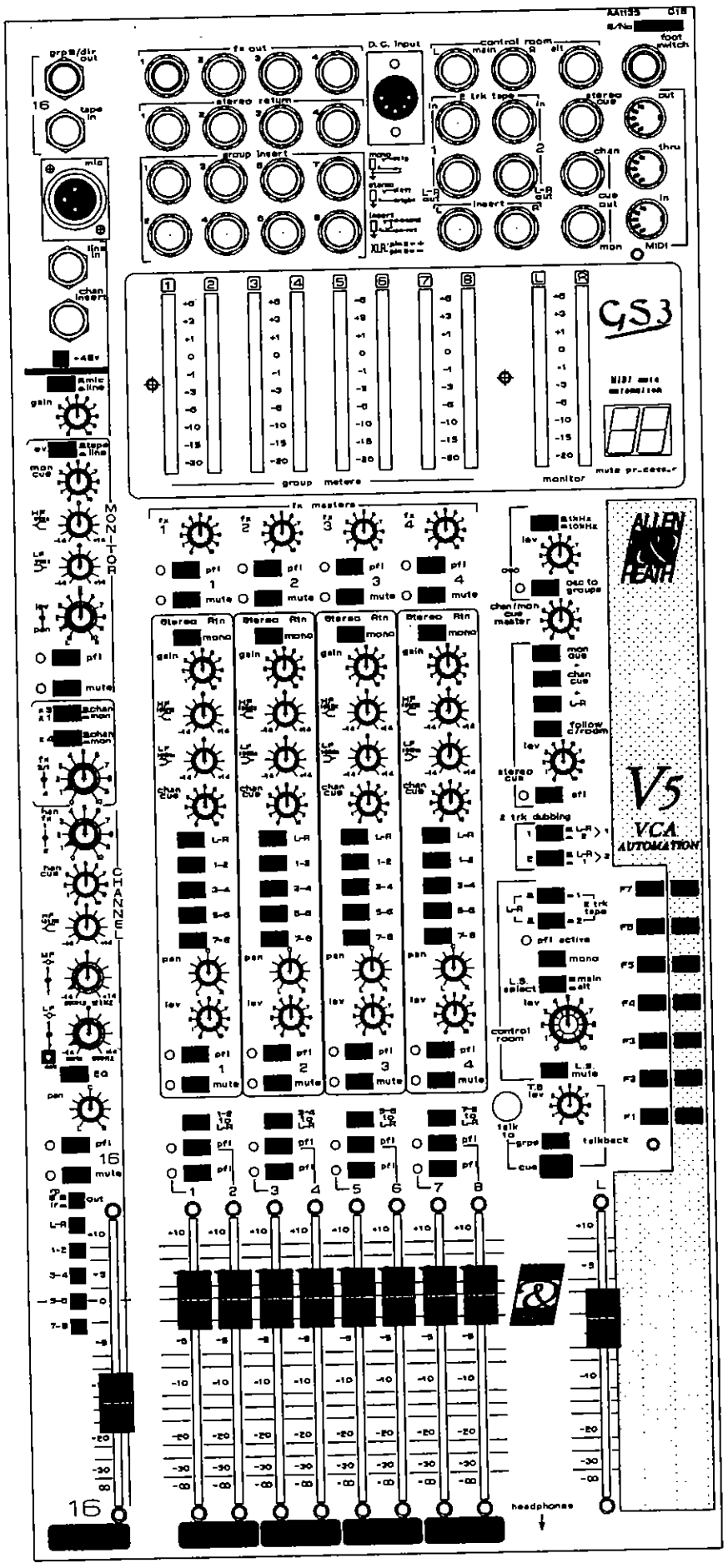

GS3
V5
VCA
AUTOMATION
ALLEN & HEATH
MONITOR
CHANNEL
D.C. input
control room
stereo return
group insert
group meters
monitor
fx masters
2 trk dubbing
pfl active
talkback
headphones

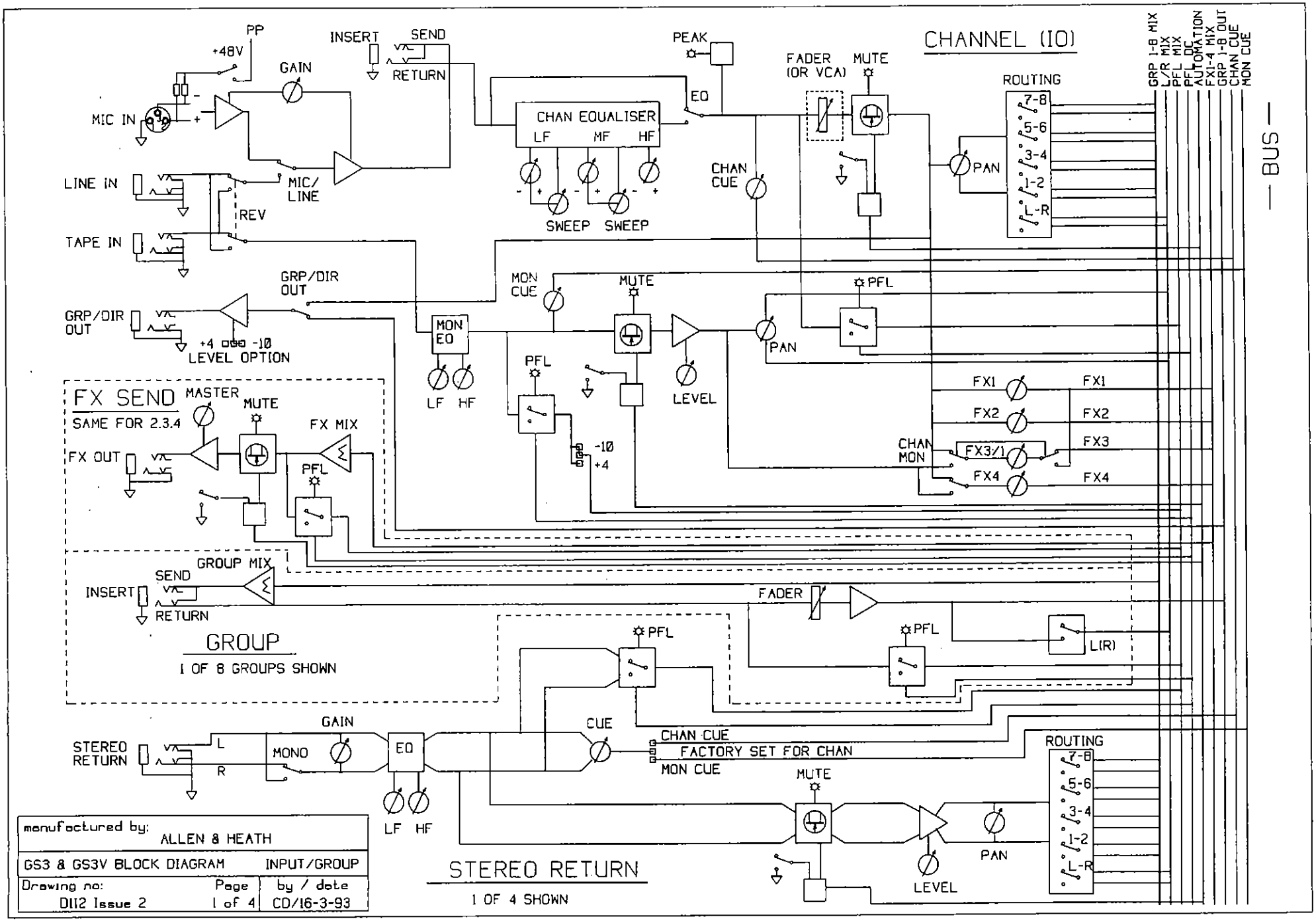
CHANNEL (IO)
PP
+48V
GAIN
INSERT
SEND
RETURN
MIC IN
LINE IN
MIC/
LINE
REV
TAPE IN
PEAK
EQ
CHAN EQUALISER
LF MF HF
SWEEP SWEEP
CHAN
CUE
FADER
(OR VCA)
MUTE
PAN
ROUTING
7-8
5-6
3-4
1-2
L-R
GRP 1-8 MIX
L/R MIX
PFL DC
AUTOMATION
FX1-4 MIX
GRP 1-8 OUT
CHAN CUE
MON CUE
BUS
GRP/DIR
OUT
+4 -10
LEVEL OPTION
MON
CUE
MUTE
PFL
MON
EQ
LF HF
PFL
-10
+4
LEVEL
PAN
FX1
FX2
FX3/1
FX4
CHAN
MON
FX SEND
MASTER
SAME FOR 2.3.4
MUTE
FX MIX
FX OUT
PFL
GROUP MIX
SEND
INSERT
RETURN
GROUP
1 OF 8 GROUPS SHOWN
FADER
PFL
L(R)
GAIN
STEREO
RETURN
L
R
MONO
EQ
CUE
CHAN CUE
FACTORY SET FOR CHAN
MON CUE
LF HF
MUTE
PAN
LEVEL
STEREO RETURN
1 OF 4 SHOWN
manufactured by:
ALLEN & HEATH
GS3 & GS3V BLOCK DIAGRAM
INPUT/GROUP
Drawing no:
DII2 Issue 2
Page
1 of 4
by / date
CD/16-3-93

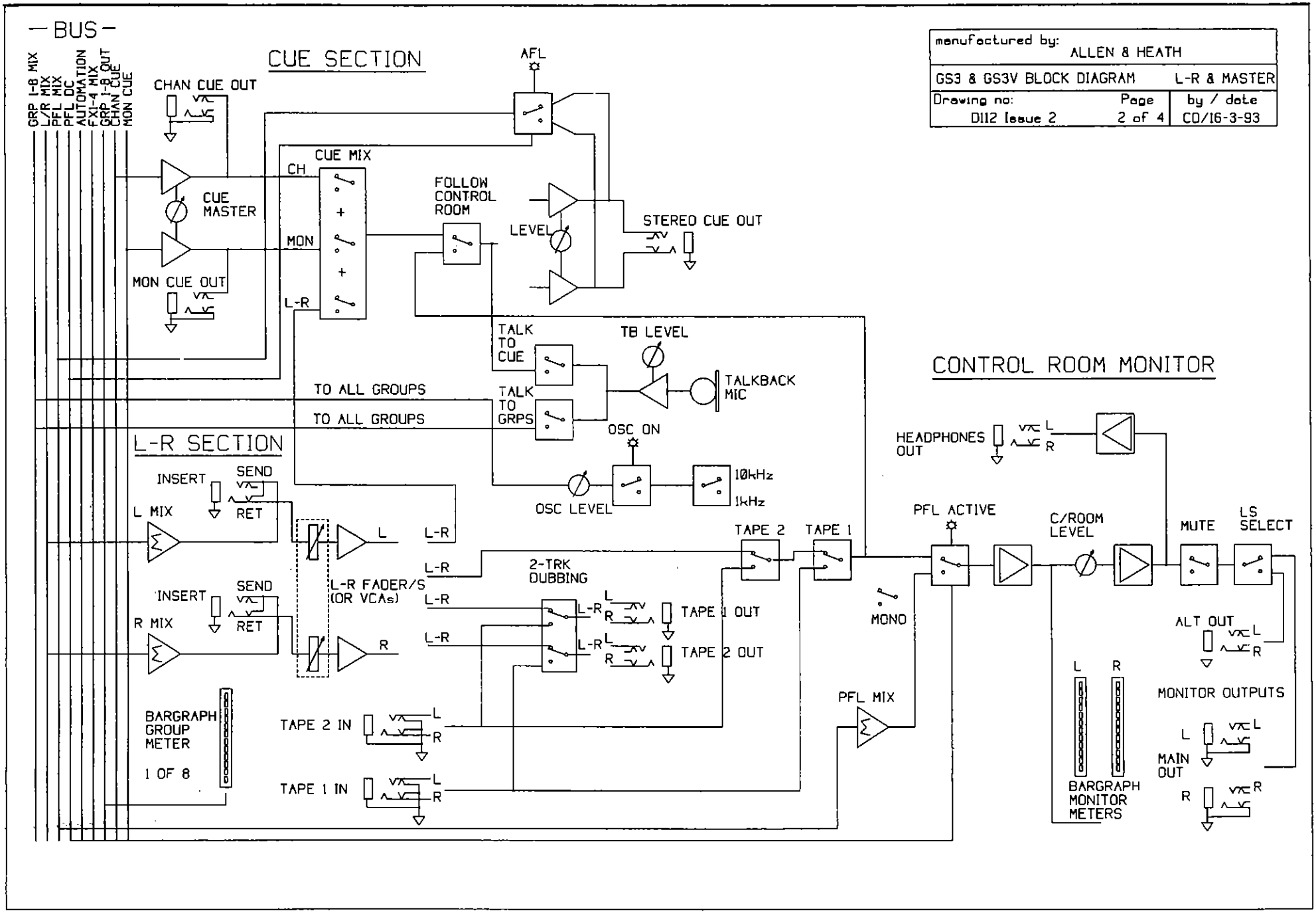

manufactured by: ALLEN & HEATH		
GS3 & GS3V BLOCK DIAGRAM		L-R & MASTER
Drawing no: D112 Issue 2	Page 2 of 4	by / date CO/16-3-93

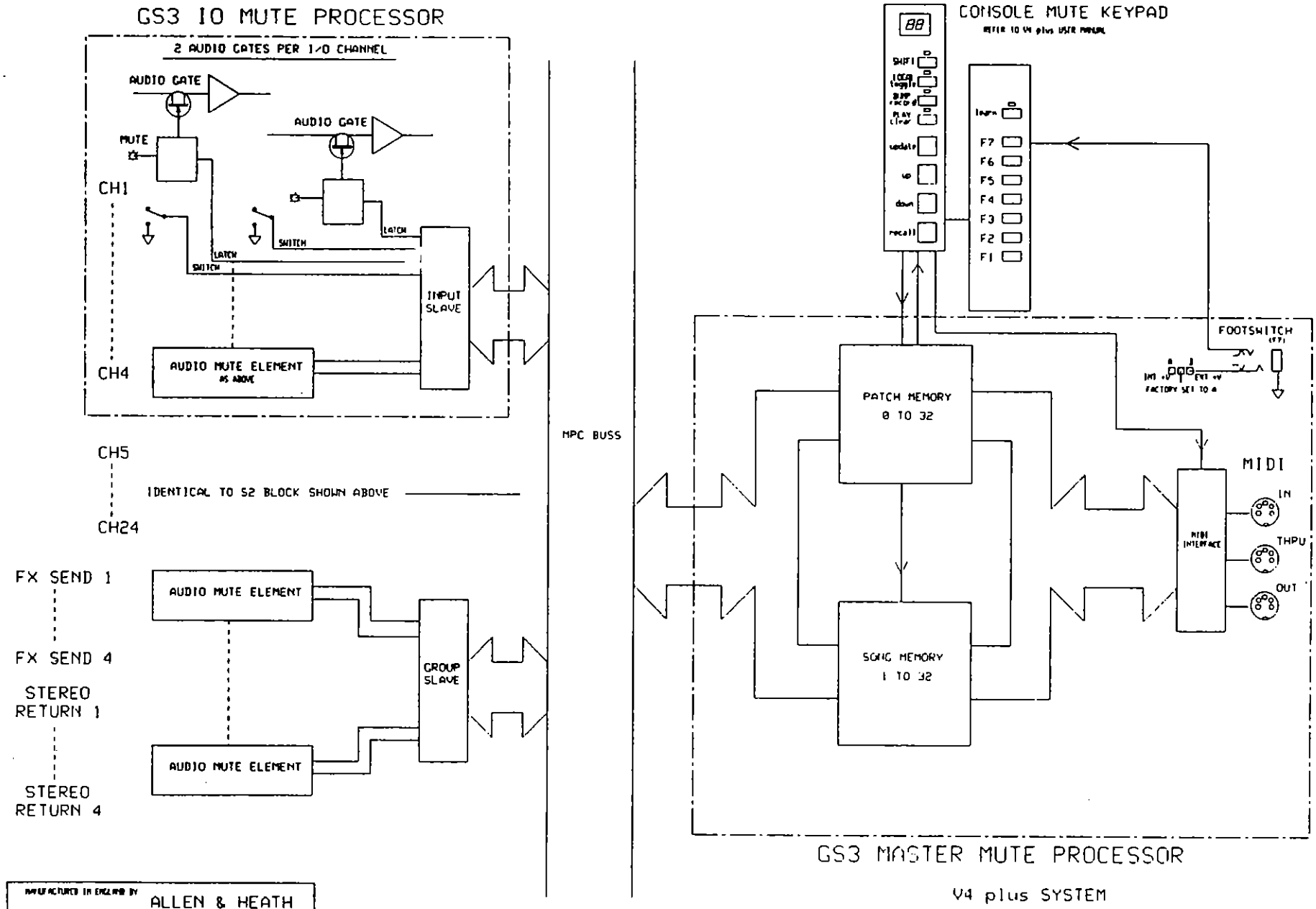

MANUFACTURED IN ENGLAND BY	ALLEN & HEATH
GS3 BLOCK DIAGRAM	MUTE AUTOMATION
DRAWING No: D112 ISSUE 1	PAGE: 3 OF 3
DRN/DATE: CB 12-11-91	

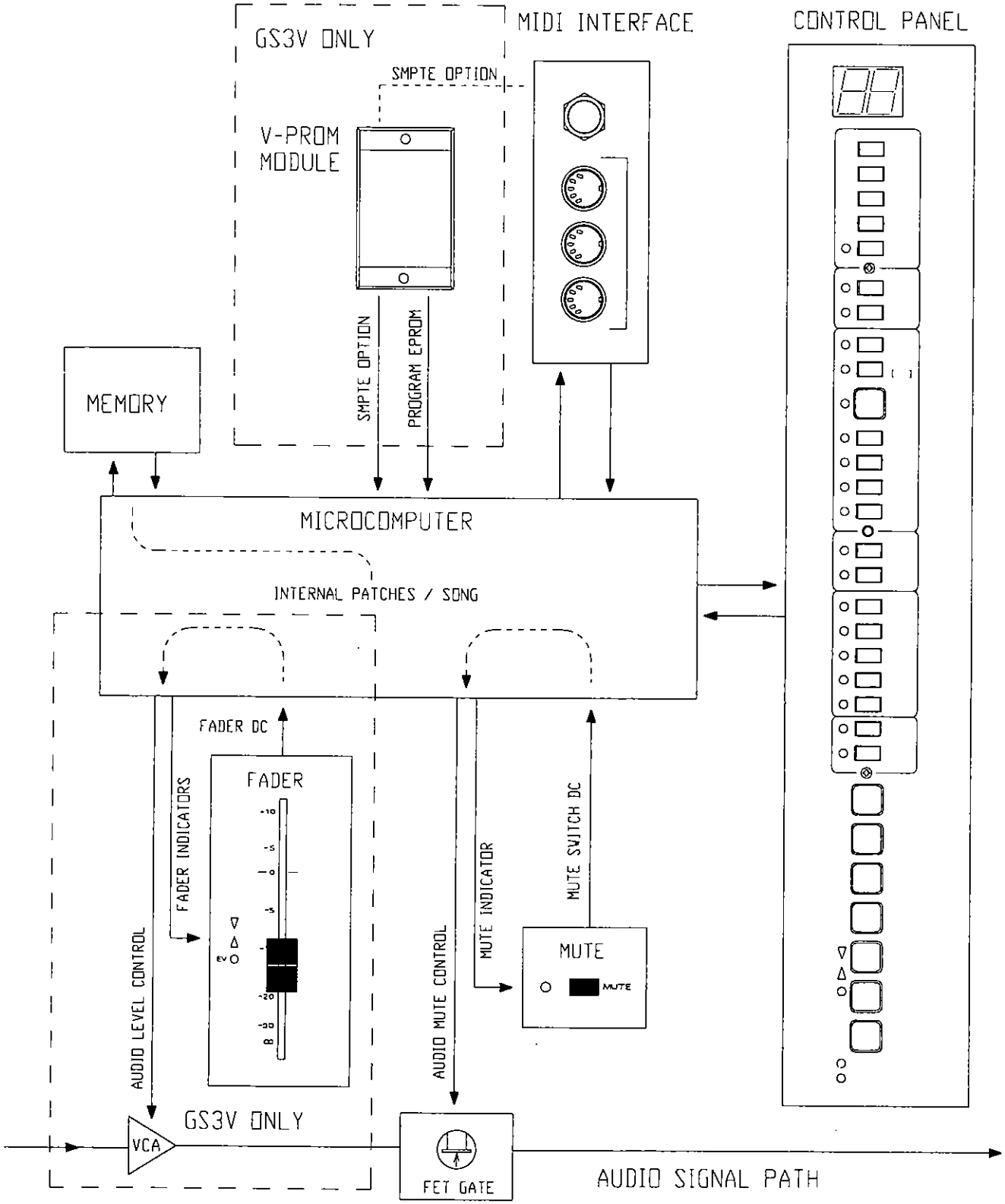

manufactured by: ALLEN & HEATH		
GS3V BLOCK DIAGRAM	MUTE/VCA AUTOMATION	
Drawing no: D112 Issue 2	Page 4 of 4	by / date CD/16-3-93

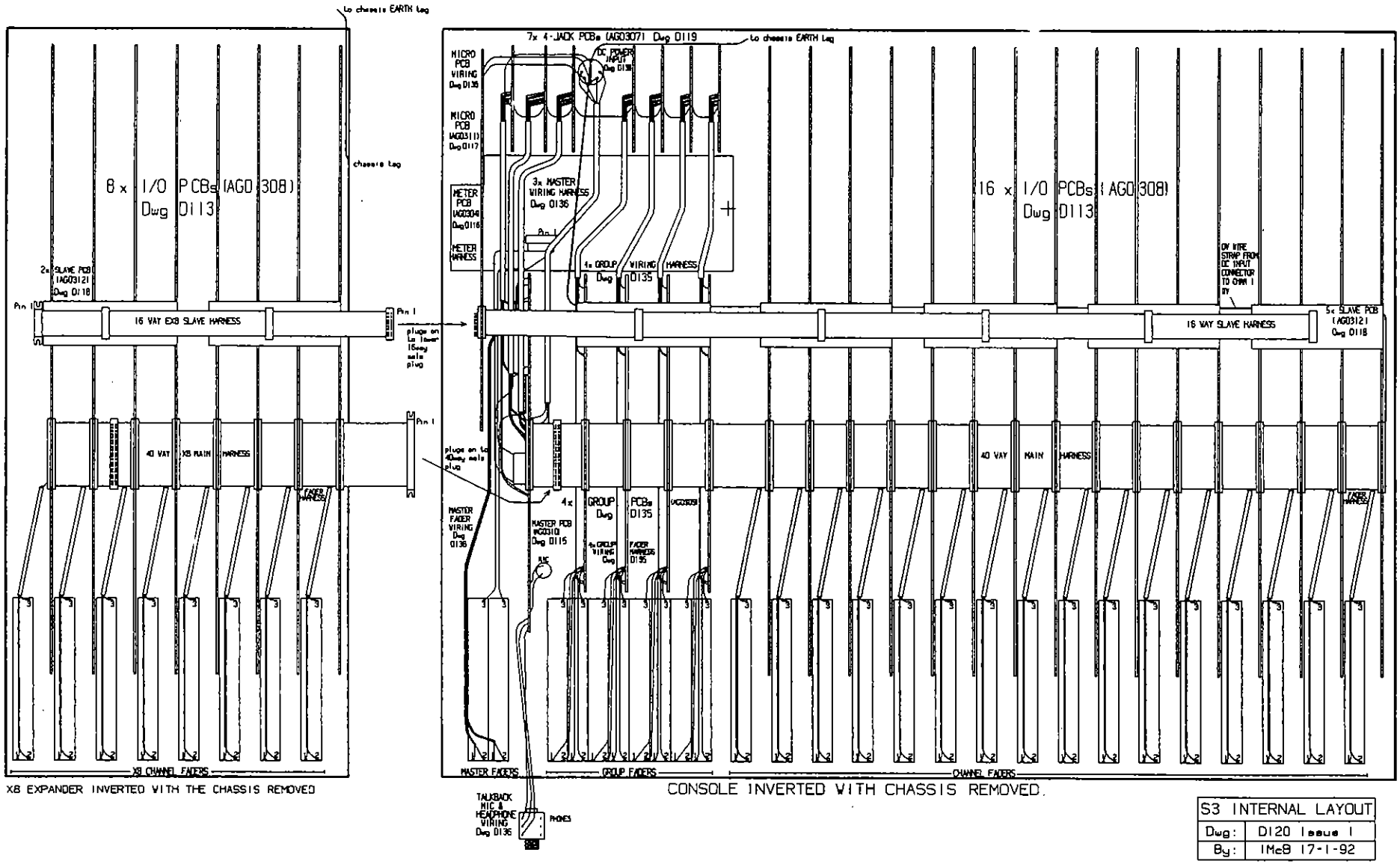

XB EXPANDER INVERTED WITH THE CHASSIS REMOVED

CONSOLE INVERTED WITH CHASSIS REMOVED.

S3 INTERNAL LAYOUT	
Dwg:	D120 Issue 1
By:	IMcB 17-1-92

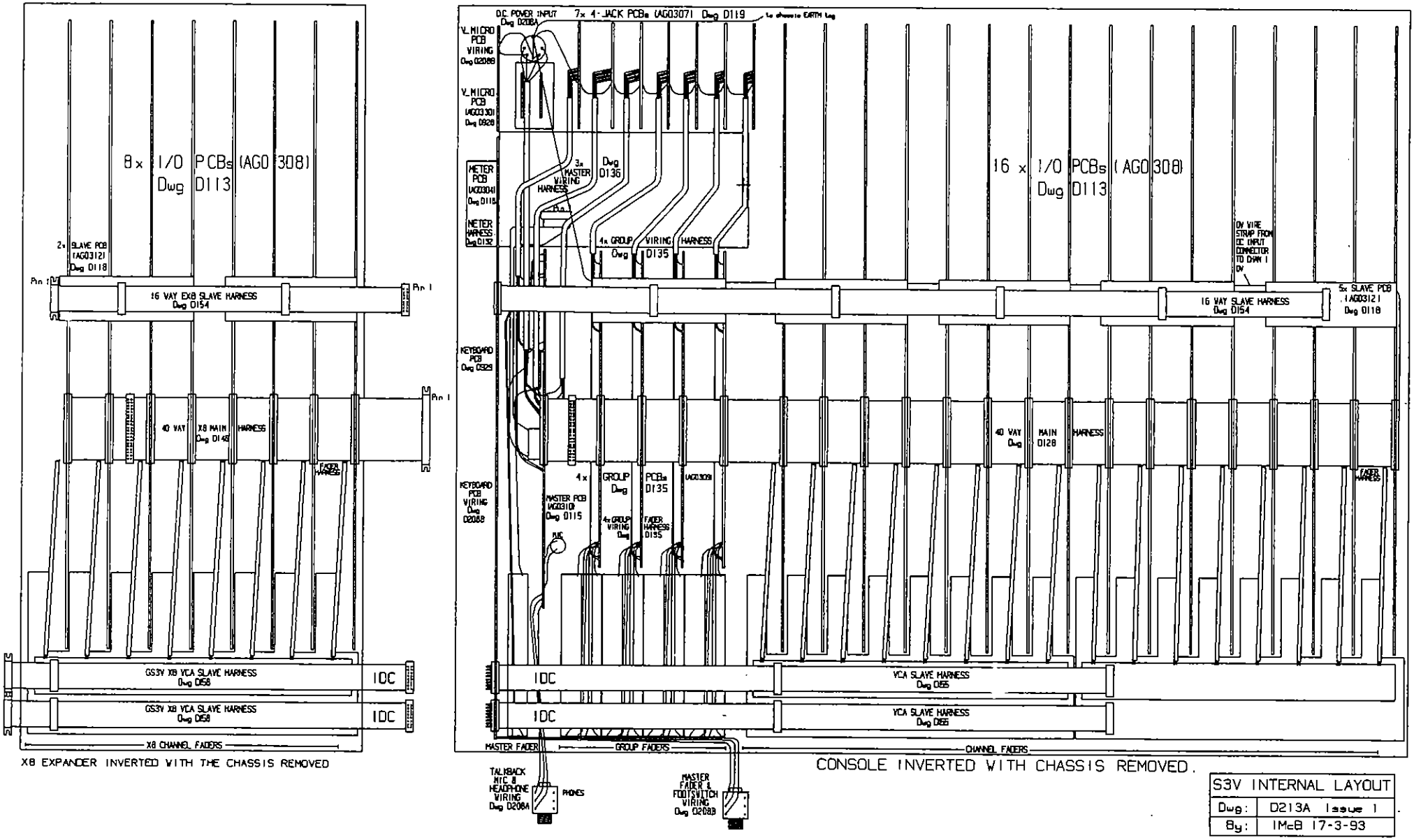

X8 EXPANDER INVERTED WITH THE CHASSIS REMOVED

CONSOLE INVERTED WITH CHASSIS REMOVED.

S3V INTERNAL LAYOUT	
Dwg:	D213A Issue 1
By:	IMcB 17-3-93

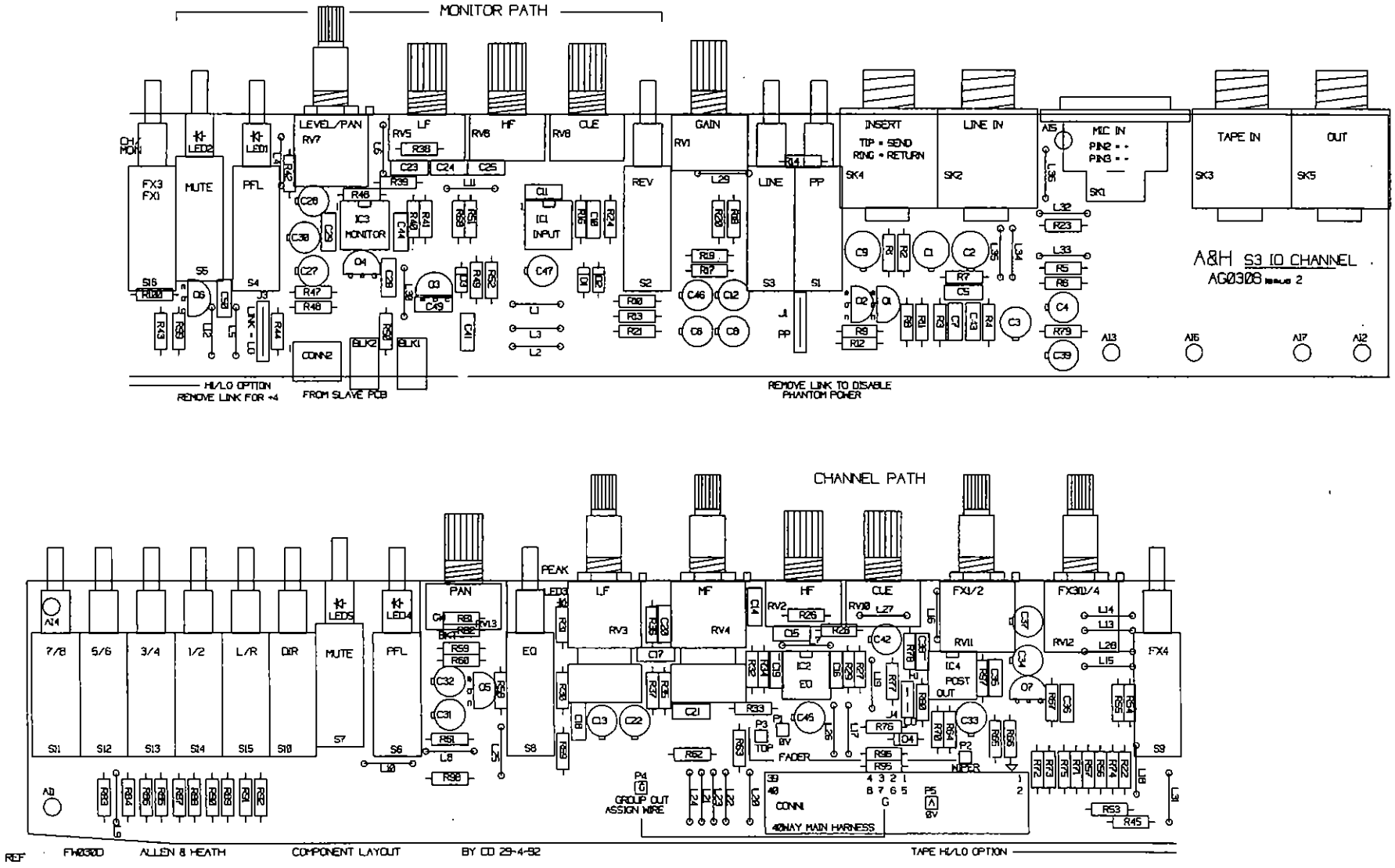
MONITOR PATH
LEVEL/PAN
LF
HF
CUE
GAIN
INSERT
TIP = SEND
RING = RETURN
LINE IN
MIC IN
PIN2 = -
PIN3 = -
TAPE IN
OUT
FX3
FX1
MUTE
PFL
REV
LINE
PP
SK1
SK2
SK3
SK4
SK5
IC3
MONITOR
IC1
INPUT
A&H S3 IO CHANNEL
AG0308 ISSUE 2
HI/LO OPTION
REMOVE LINK FOR +4
FROM SLAVE PCB
REMOVE LINK TO DISABLE
PHANTOM POWER
CHANNEL PATH
PEAK
PAN
EQ
FX1/2
FX3D/4
FX4
7/8
5/6
3/4
1/2
L/R
DIR
MUTE
PFL
IC2
EQ
IC4
POST
OUT
FADER
TOP
CONN
40WAY MAIN HARNESS
GROUP OUT
ASSIGN WIRE
REF
FW0300
ALLEN & HEATH
COMPONENT LAYOUT
BY CD 29-4-92
TAPE HI/LO OPTION

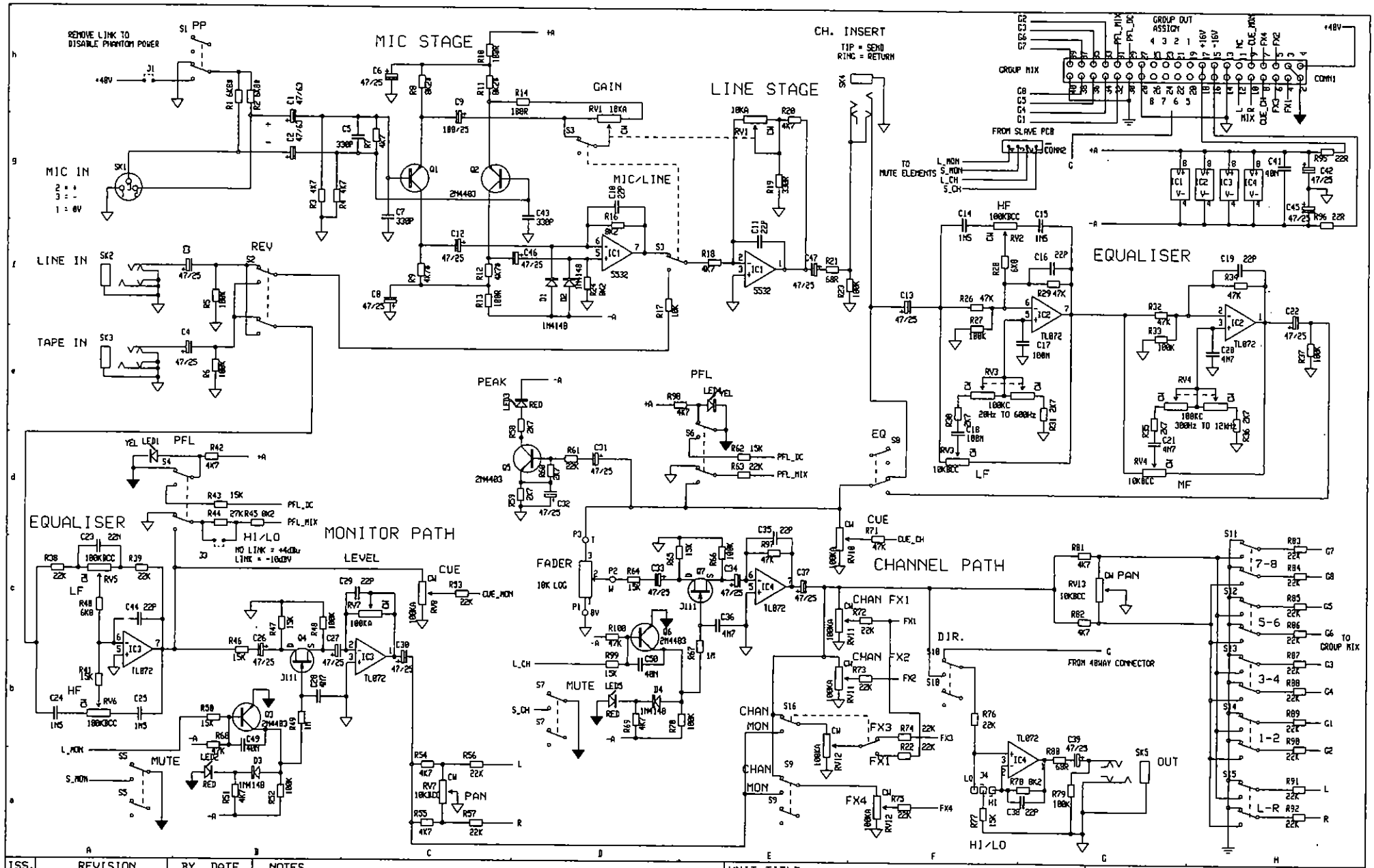

ISS.	REVISION	BY	DATE
1	ORIGIN	CD	17-10-91
2	R21, R47, R88 VALUES CHANGED	DRP	2-2-93

NOTES

1. RESISTORS MARKED # ARE 1% ALL OTHERS ARE 5% 1/4W UNLESS OTHERWISE MARKED
2. ELECTROLYTIC CAPACITORS ARE µF/VOLTS

UNIT TITLE: S3

DRAWING TITLE: IO CIRCUIT DIAGRAM

PCB TYPE AG0308

MANUFACTURED IN ENGLAND BY

ALLEN & HEATH

DRAWING No. D113 ISSUE 2

GROUP PCB AG0309

PCB COMPONENT VIEWS

4JACK PCB AG0307

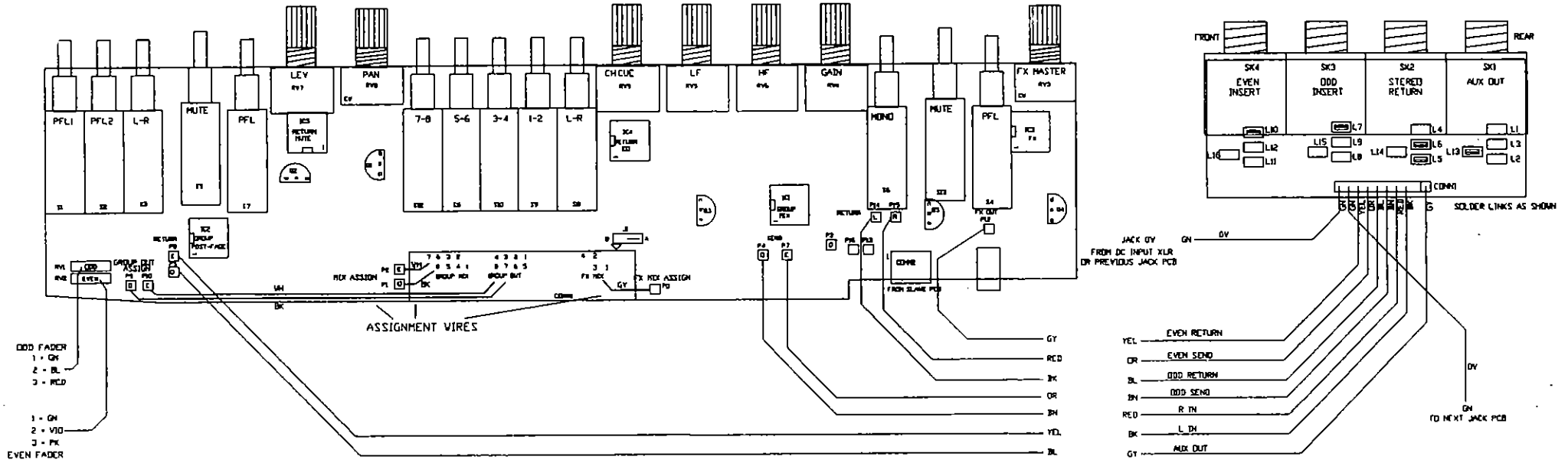

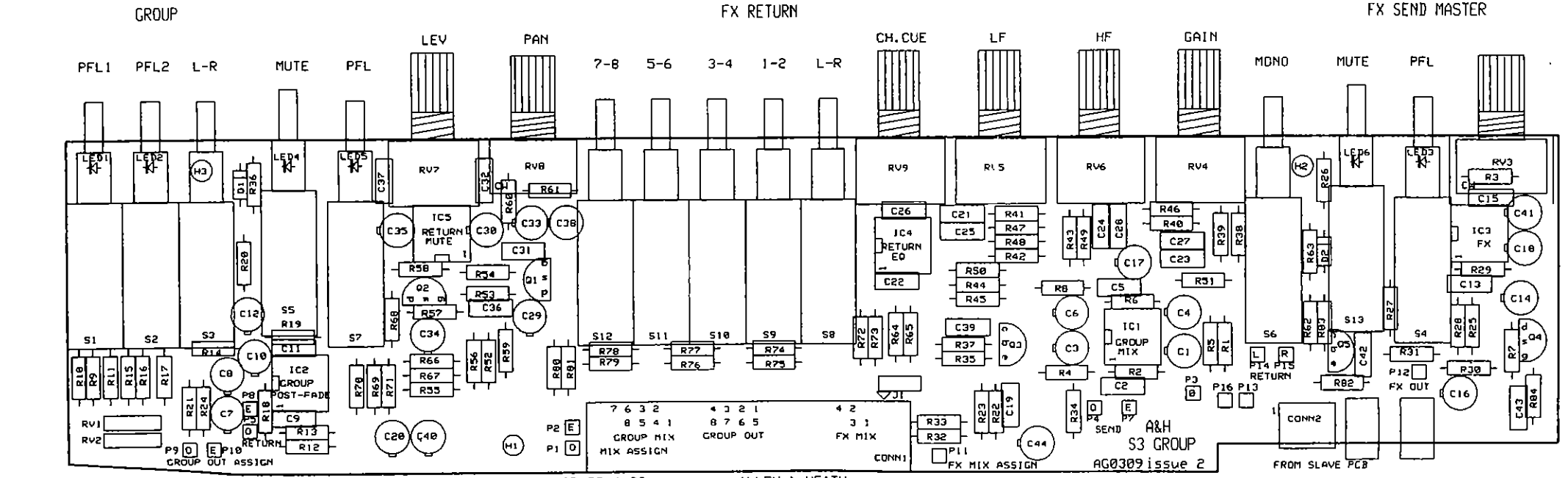

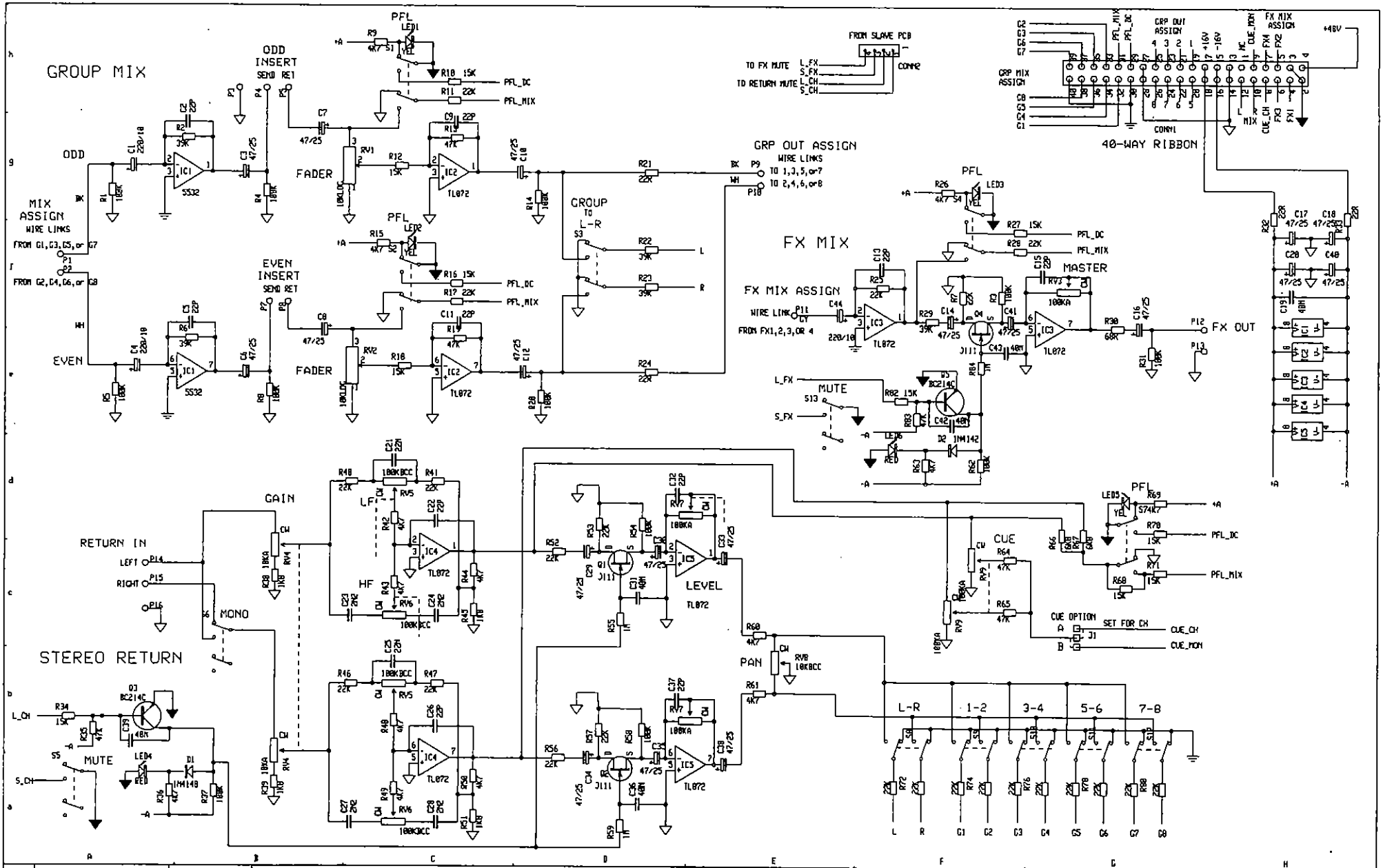

ISS.	REVISION	BY	DATE
1	ORIGIN PRODUCTION	CD	24-10-91
2	R30 VALUE CHANGED IC3 DEVICE CHANGED	DRP	3-2-93

NOTES

1. RESISTORS MARKED * ARE 1%
   ALL OTHERS ARE 5% 1/4W UNLESS OTHERWISE MARKED
2. ELECTROLYTIC CAPACITORS ARE µF/VOLTS

UNIT TITLE: S3

DRAWING TITLE: GROUP CIRCUIT DIAGRAM

PCB TYPE AG0309

MANUFACTURED IN ENGLAND BY

ALLEN & HEATH

DRAWING No. D114 ISSUE 2

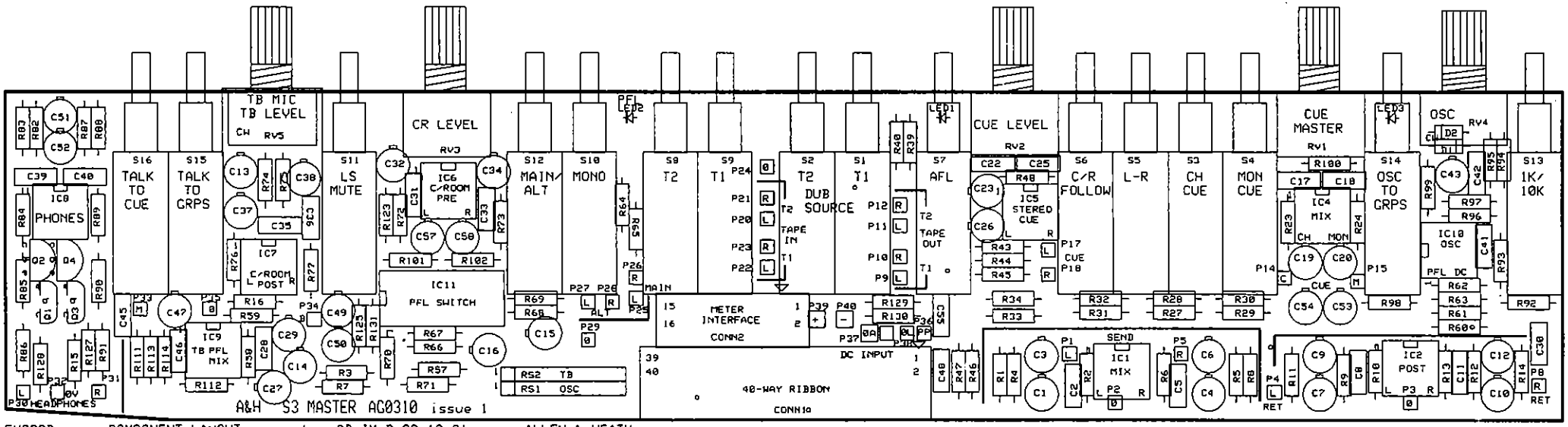

FW032D COMPONENT LAYOUT by: CD/IMcB 23-10-91 ALLEN & HEATH

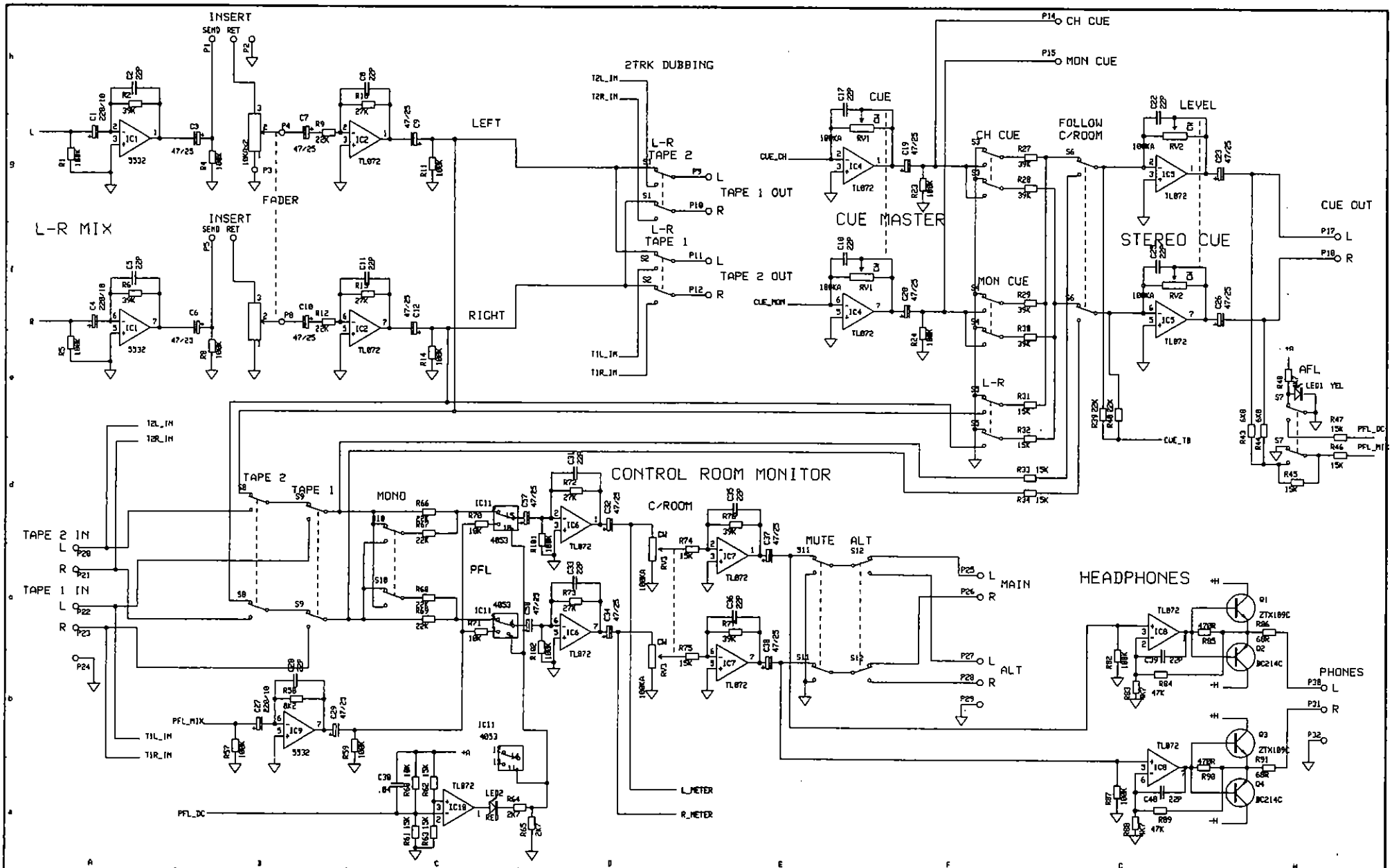

ISS.	REVISION	BY	DATE
1	ORIGIN PRODUCTION	CD	29-10-91

NOTES

1. RESISTORS MARKED # ARE 1%
   ALL OTHERS ARE 5% 1/4W UNLESS OTHERWISE MARKED
2. ELECTROLYTIC CAPACITORS ARE µF/VOLTS

UNIT TITLE: S3

DRAWING TITLE: MASTER CIRCUIT DIAGRAM
SHEET 1 OF 2
PCB TYPE AG0310

MANUFACTURED IN ENGLAND BY
ALLEN & HEATH

DRAWING No. D115 ISSUE 1

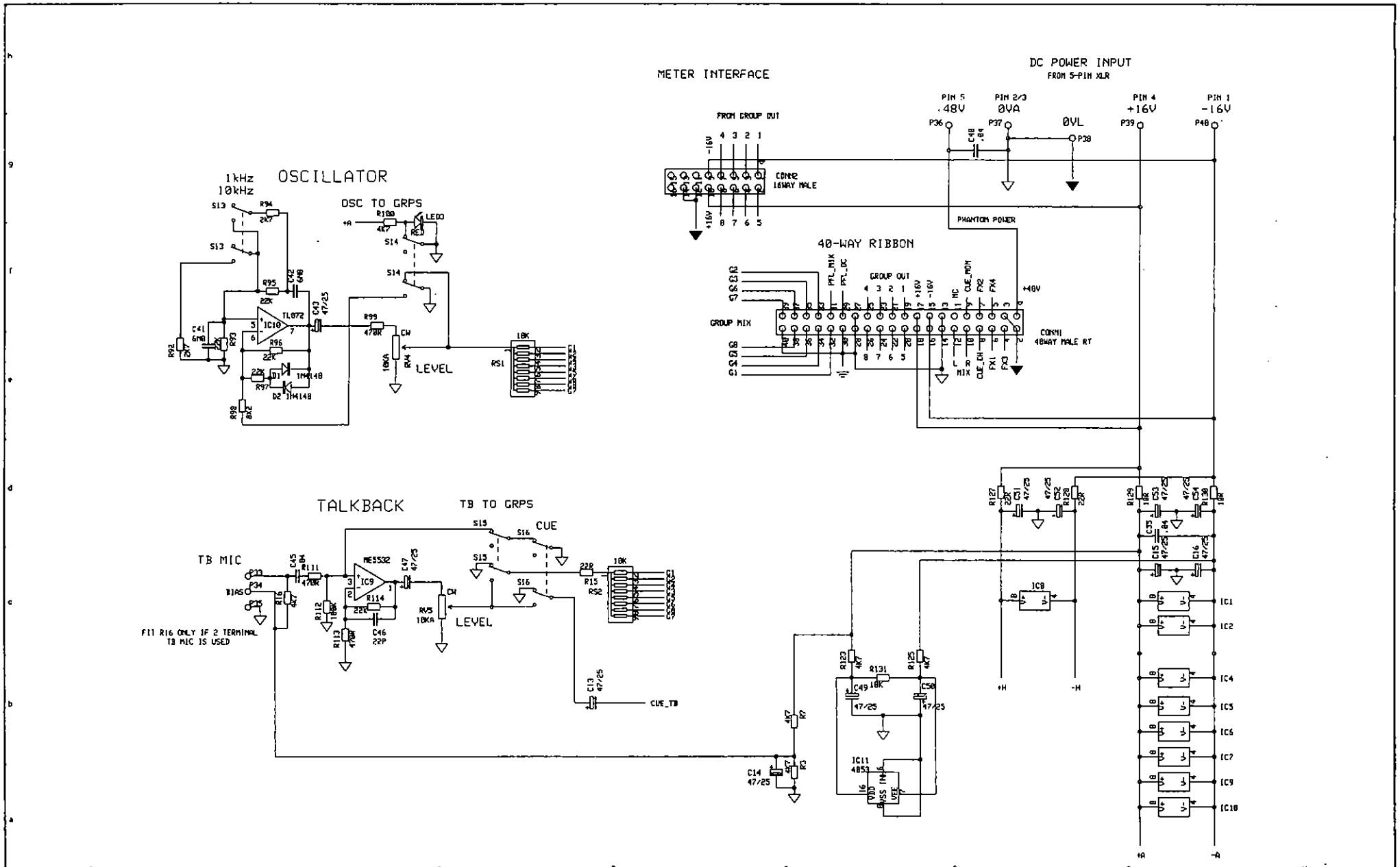

ISS.	REVISION	BY	DATE
1	ORIGIN PRODUCTION	CD	29-10-91

NOTES

1. RESISTORS MARKED Ω ARE 1%
   ALL OTHERS ARE 5% 1/4W UNLESS OTHERWISE MARKED
2. ELECTROLYTIC CAPACITORS ARE μF/VOLTS

UNIT TITLE: S3

DRAWING TITLE: MASTER CIRCUIT DIAGRAM

SHEET 2 OF 2

PCB TYPE AG0310

MANUFACTURED IN ENGLAND BY

ALLEN & HEATH

DRAWING No. D115 ISSUE 1

G LR M

REAR

FX OUT L13	MAIN L OUT L13 R11	MAIN R OUT L13 R11	ALT OUT R11, R12
STEREO RETURN L5 L6	2-TRACK 1 IN L5 L6	2-TRACK 2 IN L5 L6	STEREO CUE
ODD INSERT L7	2-TRACK 1 OUT	2-TRACK 2 OUT	CH. CUE L15
EVEN INSERT L18	LEFT INSERT L18	RIGHT INSERT L18	MON. CUE L16

SOLDER LINK OPTIONS ACCORDING TO PCB POSITION FRONT

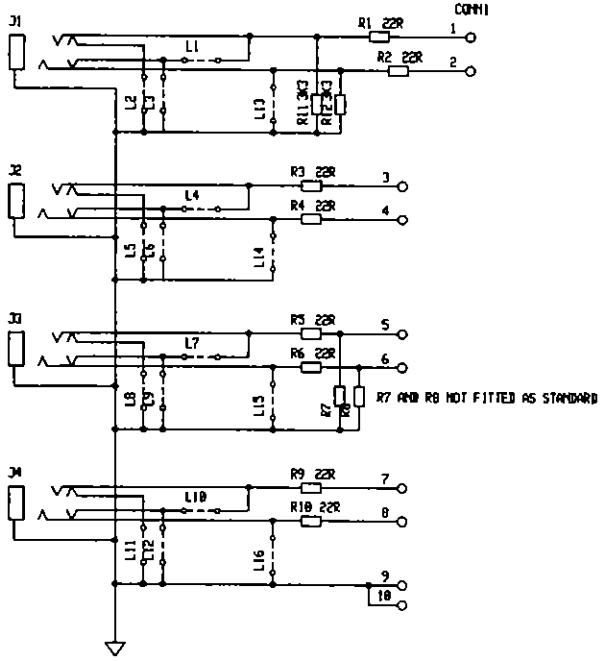

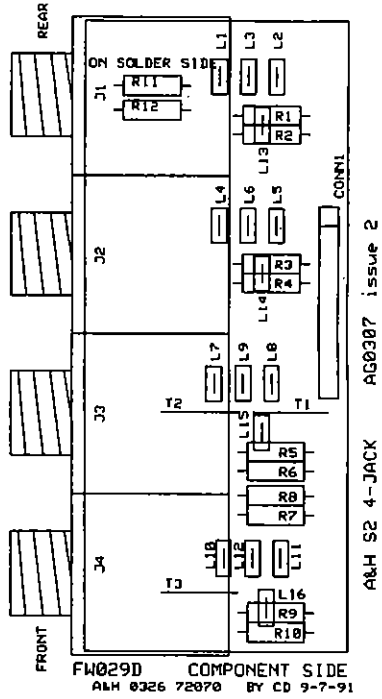

REVISION		BY	DATE
ISS.1	ORIGINPRODUCTION	CD	19-1-92
ISS.2	R11, R12 ADDED	CD	9-10-92

UNIT TITLE: S3

DRAWING TITLE: 4-JACK CIRCUIT DIAGRAM

PCB TYPE AQ0307

MANUFACTURED IN ENGLAND BY

ALLEN & HEATH

DRAWING No. D119 ISSUE 2

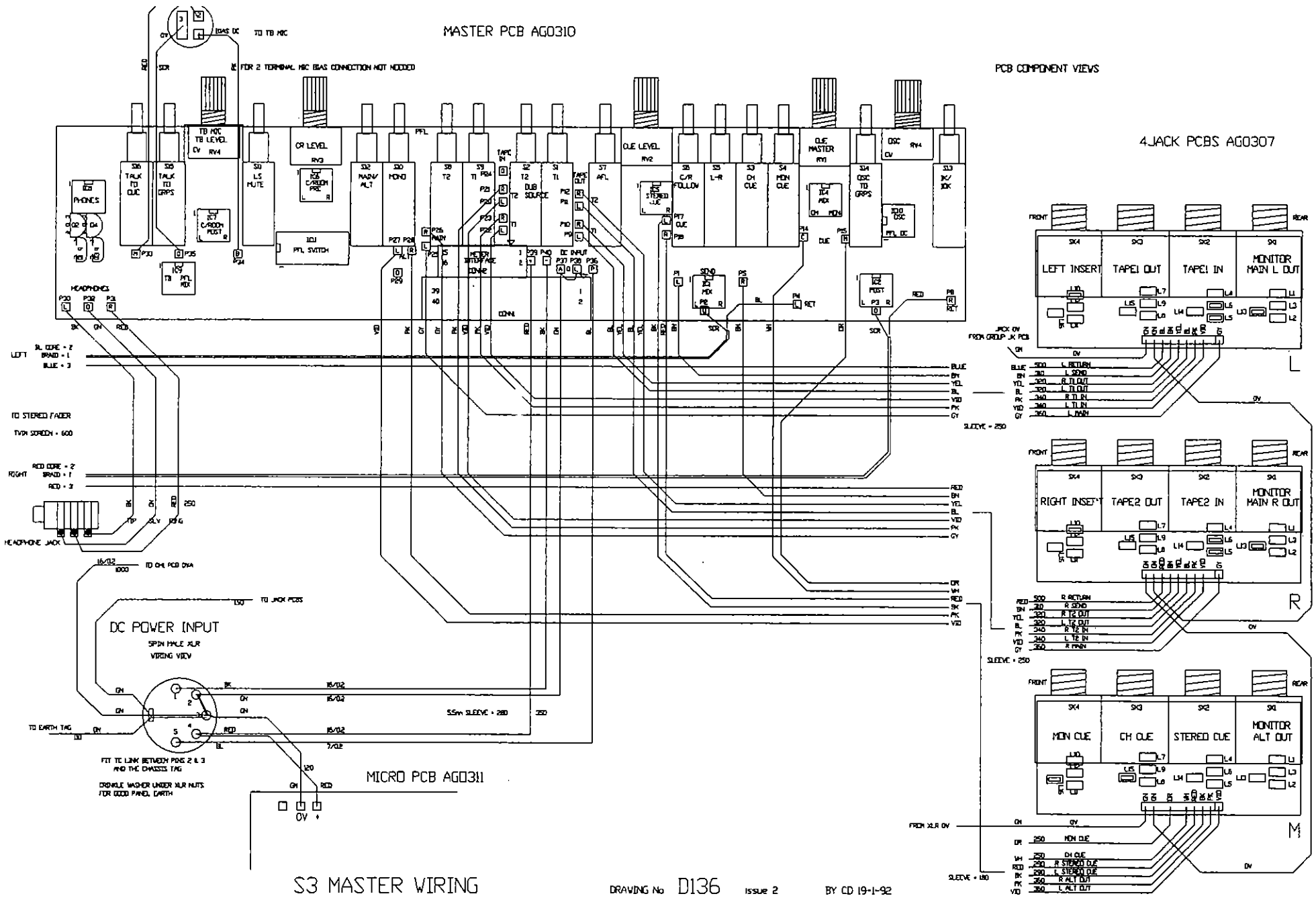

S3 MASTER WIRING

DRAWING No D136 Issue 2 BY CD 19-1-92

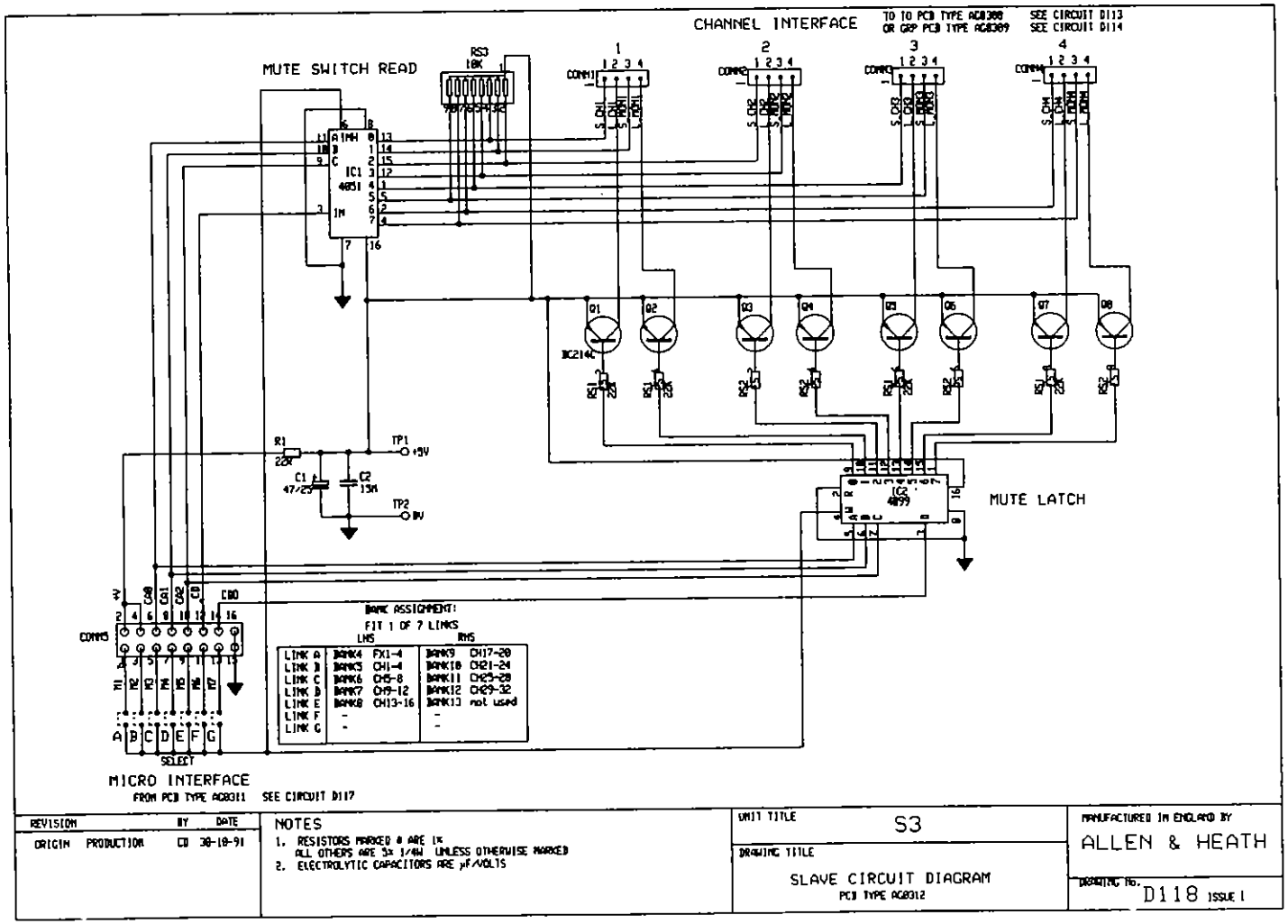
CHANNEL INTERFACE
TO TO PCB TYPE AC8308 OR GRP PCB TYPE AC8309
SEE CIRCUIT D113
SEE CIRCUIT D114
MUTE SWITCH READ
MUTE LATCH
BANK ASSIGNMENT
FIT 1 OF 7 LINKS
LHS
RHS
LINK A BANK4 FX1-4 BANK9 CH17-20
LINK B BANK5 CH1-4 BANK10 CH21-24
LINK C BANK6 CH5-8 BANK11 CH25-28
LINK D BANK7 CH9-12 BANK12 CH29-32
LINK E BANK8 CH13-16 BANK13 not used
LINK F -
LINK G -
MICRO INTERFACE
FROM PCB TYPE AC8311 SEE CIRCUIT D117
SELECT
REVISION BY DATE
ORIGIN PRODUCTION CD 30-10-91
NOTES
1. RESISTORS MARKED # ARE 1%
ALL OTHERS ARE 5% 1/4W UNLESS OTHERWISE MARKED
2. ELECTROLYTIC CAPACITORS ARE µF/VOLTS
UNIT TITLE S3
DRAWING TITLE
SLAVE CIRCUIT DIAGRAM
PCB TYPE AC8312
MANUFACTURED IN ENGLAND BY
ALLEN & HEATH
DRAWING No. D118 ISSUE 1

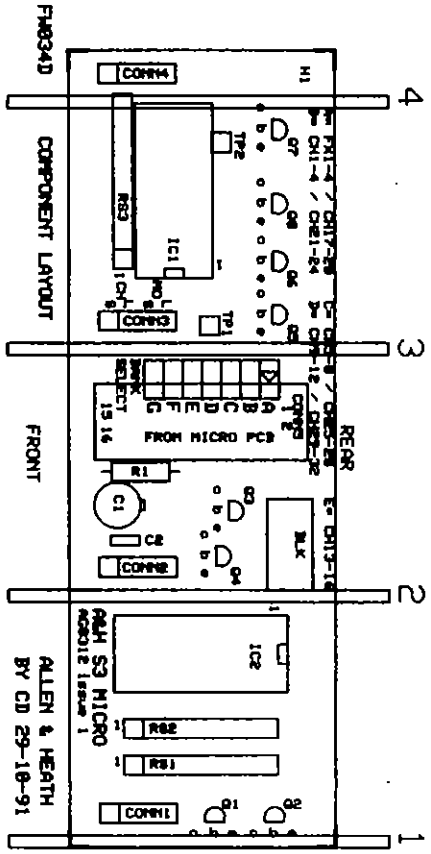
FM8340
COMPONENT LAYOUT
FRONT
REAR
ALLEN & HEATH
BY CD 29-10-91
FROM MICRO PCB
MUTE LATCH

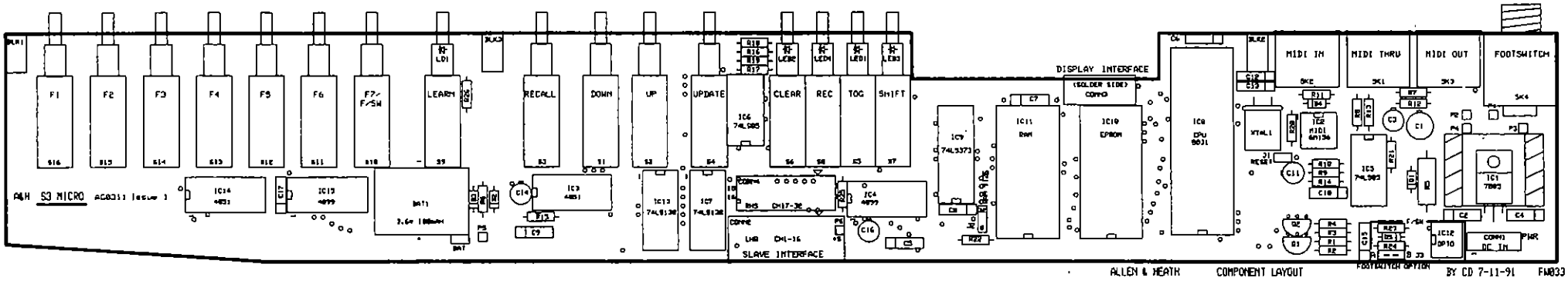
F1
F2
F3
F4
F5
F6
F7/ F/SW
LEARN
RECALL
DOWN
UP
UPDATE
CLEAR
REC
TOG
SHIFT
DISPLAY INTERFACE
(SOLDER SIDE) COMP
MIDI IN
MIDI THRU
MIDI OUT
FOOTSWITCH
A&H S3 MICRO
SLAVE INTERFACE
ALLEN & HEATH COMPONENT LAYOUT
BY CD 7-11-91 FM033

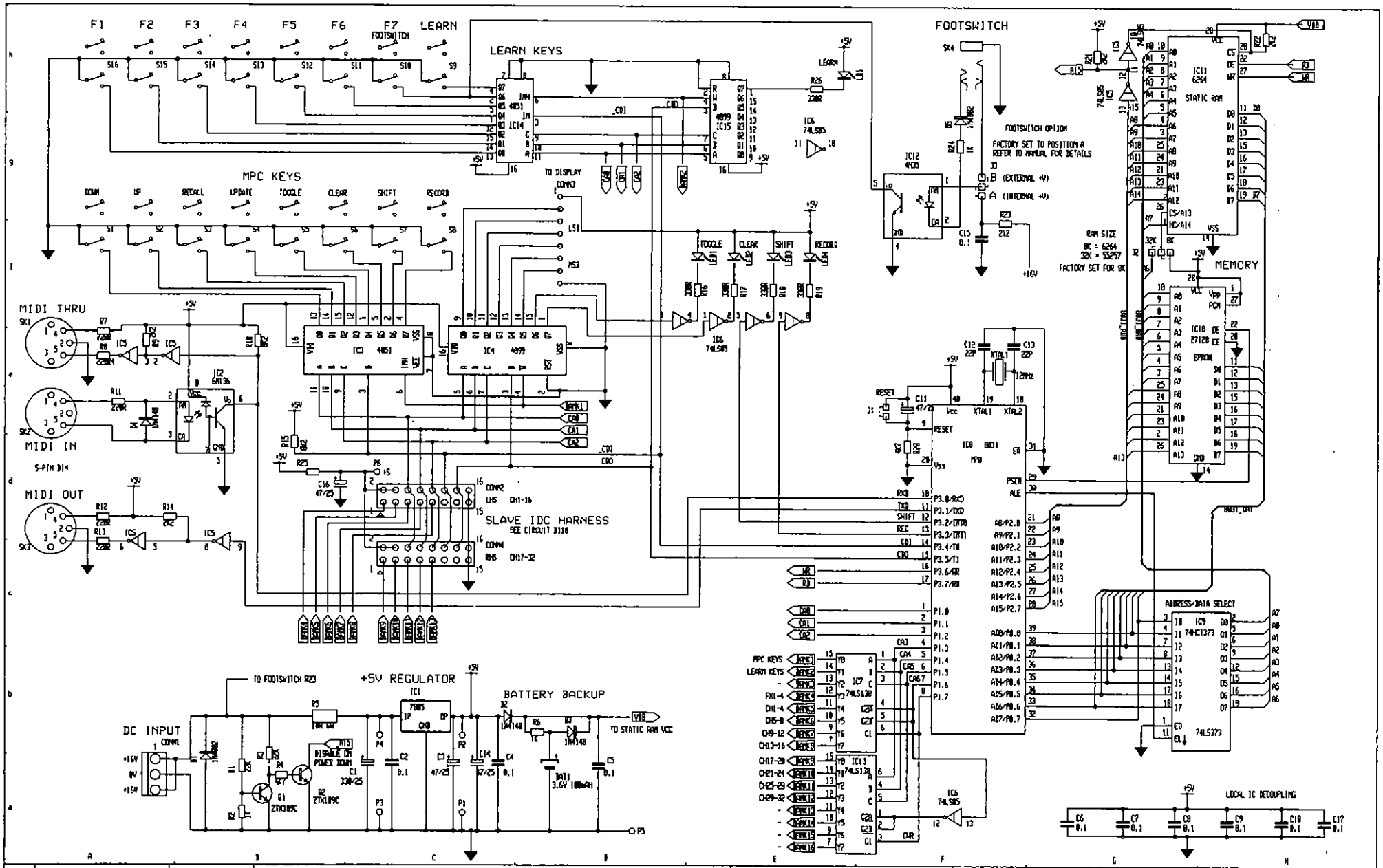

ISS.	REVISION	BY	DATE
1	ORIGIN PRODUCTION	CD	8-11-91

NOTES

1. RESISTORS MARKED A ARE 1% ALL OTHERS ARE 5% 1/4W UNLESS OTHERWISE MARKED
2. ELECTROLYTIC CAPACITORS ARE µF/VOLTS

UNIT TITLE: S3

DRAWING TITLE: MICRO CIRCUIT - MUTE PROCESSOR
PCB TYPE AG0311

MANUFACTURED IN ENGLAND BY
ALLEN & HEATH

DRAWING No. D117 ISSUE 1

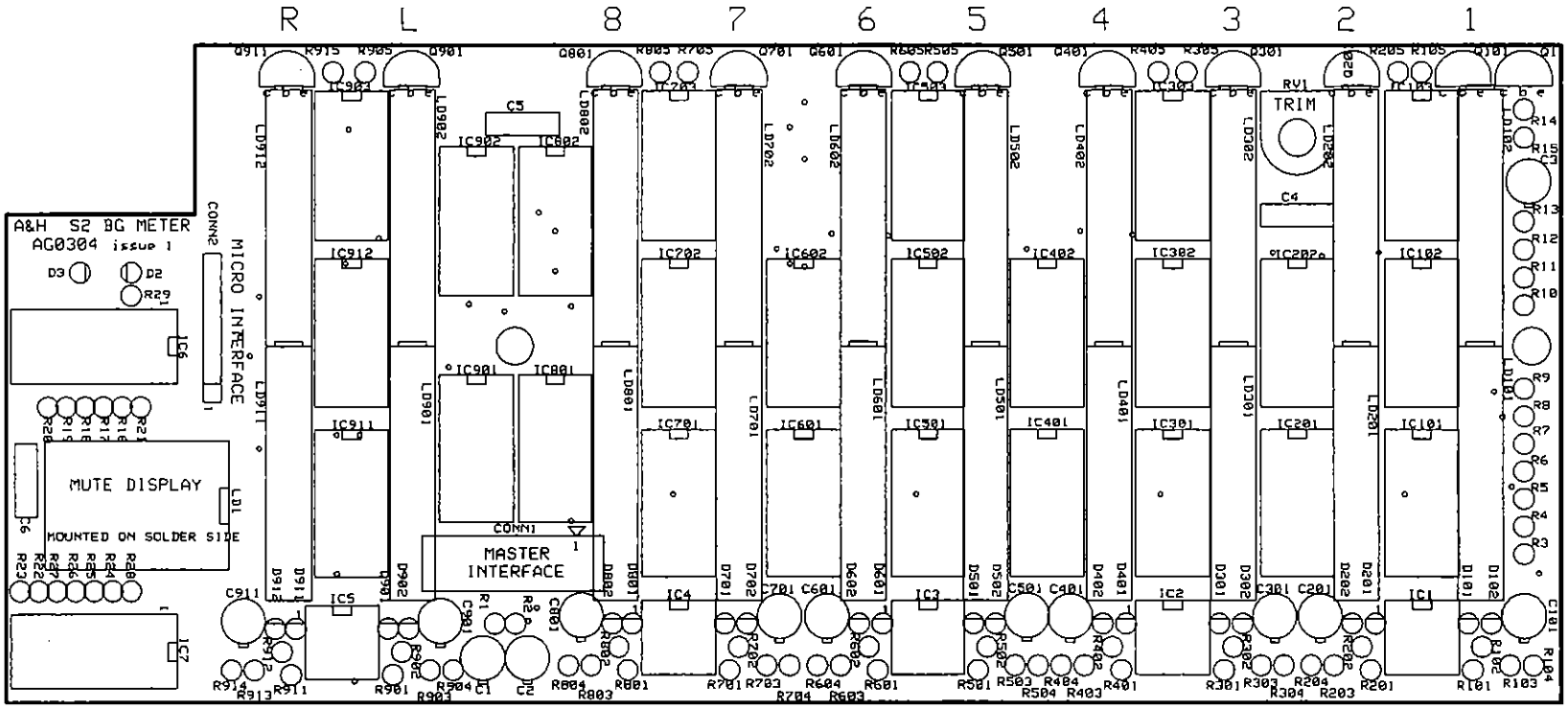

FW026D A&H 0326 72070 A&H 0326 72070 BY CD/GMR 13-5-91

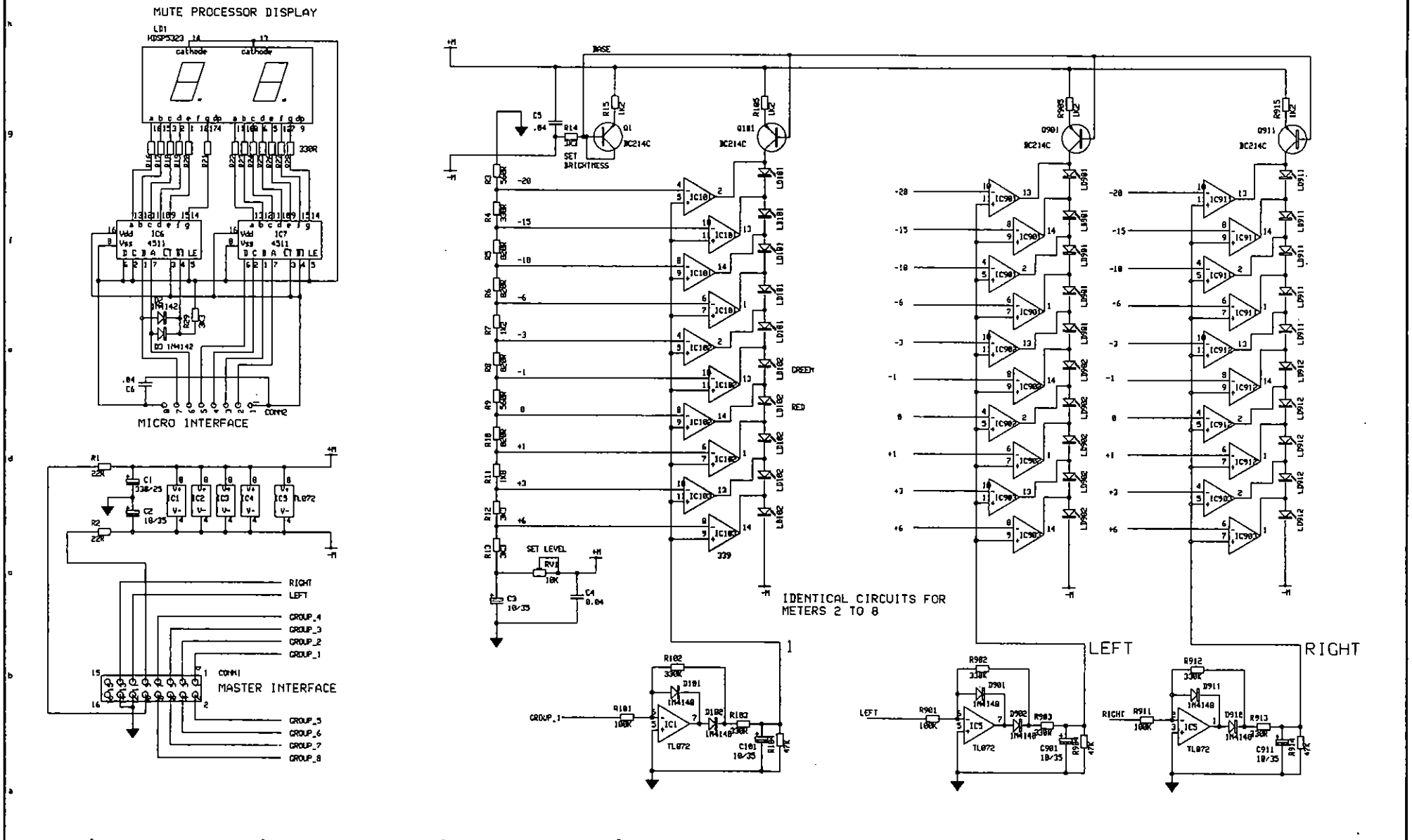

ISS.	REVISION	BY	DATE
1	ORIGIN	CD	19-1-92

NOTES

1. RESISTORS MARKED # ARE 1%
   ALL OTHERS ARE 5% 1/4W UNLESS OTHERWISE MARKED
2. ELECTROLYTIC CAPACITORS ARE μF/VOLTS

UNIT TITLE: S3

DRAWING TITLE: BARGRAPH METER CIRCUIT

PCB TYPE: AG0304

MANUFACTURED IN ENGLAND BY

ALLEN & HEATH

DRAWING No. D116 ISSUE 1

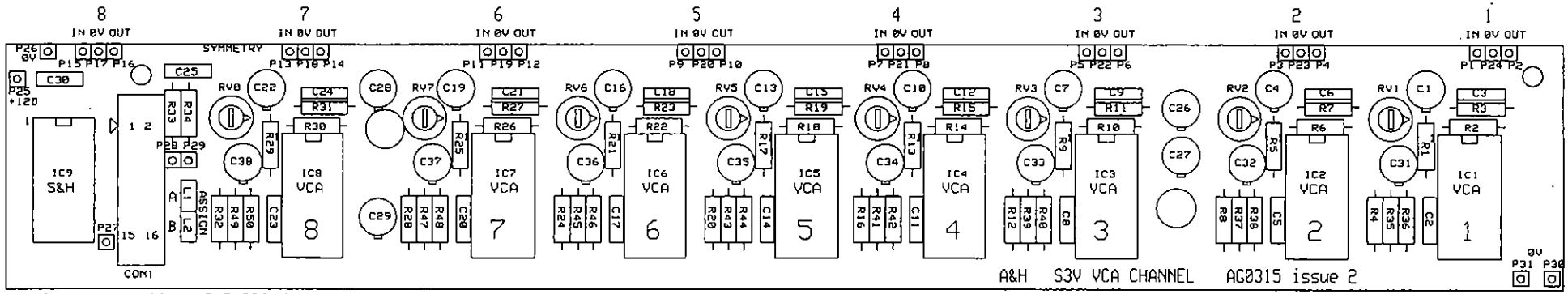

FW037D COMPONENT PRINT A&H BY CD 15-4-92

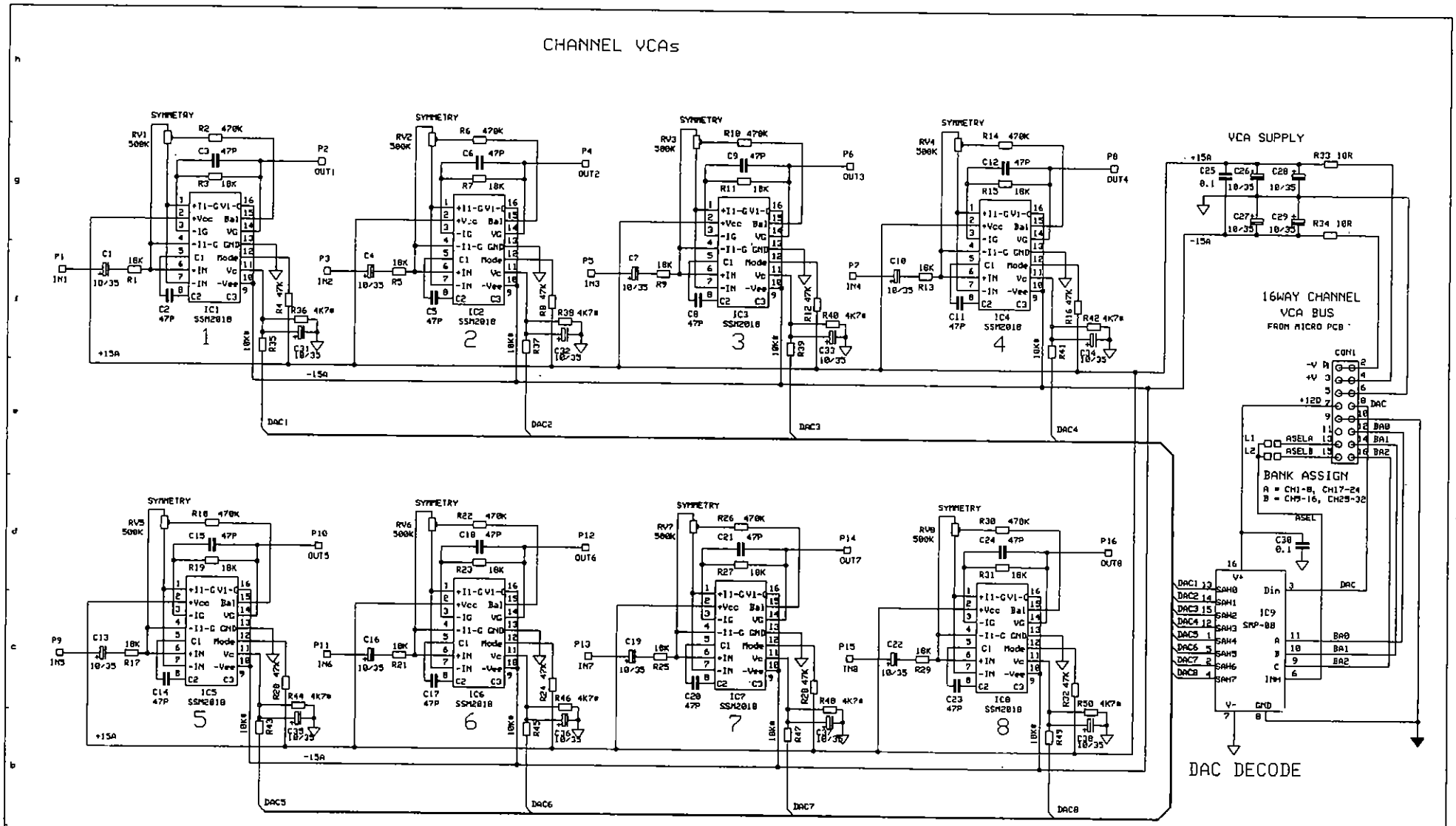

ISS.	REVISION	FILE	BY DATE
1	PRODUCTION	S3VVCA.FSH	CD 14-2-92

NOTES:

1. ALL RESISTORS 5% 1/4W UNLESSOTHERWISE SPECIFIED
2. ELECTROLYTIC CAPACITORS ARE µF/VOLTS
3. / = ACTIVE LOW

UNIT TITLE: GS3V VCA SYSTEM

DRAWING TITLE: S3V CHANNEL VCA CIRCUIT
PCB TYPE AC0315

MANUFACTURED IN ENGLAND BY
ALLEN & HEATH

DRAWING No. D144 ISSUE 1

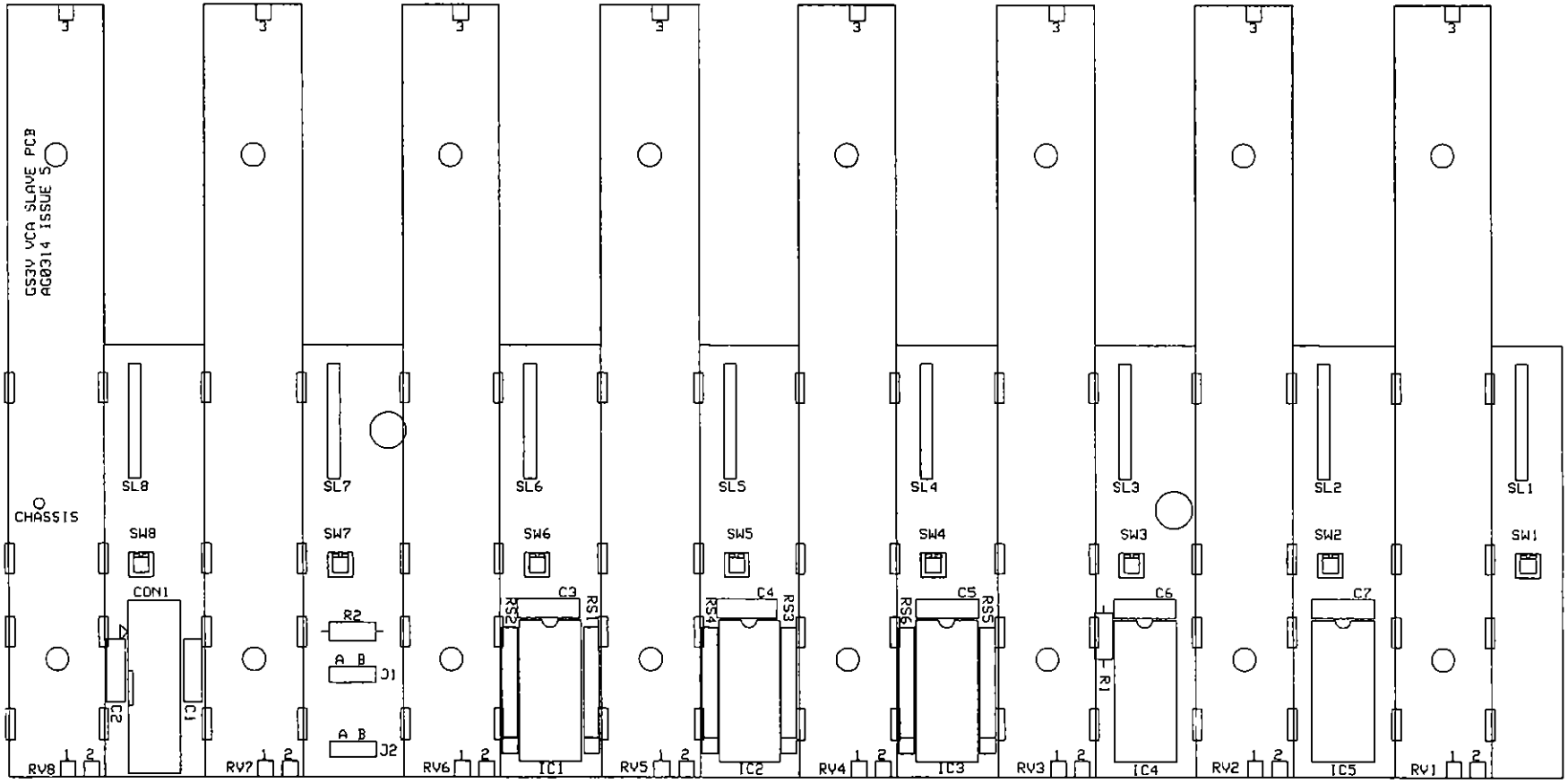

FW036D
GS3V VCA SLAVE PCB

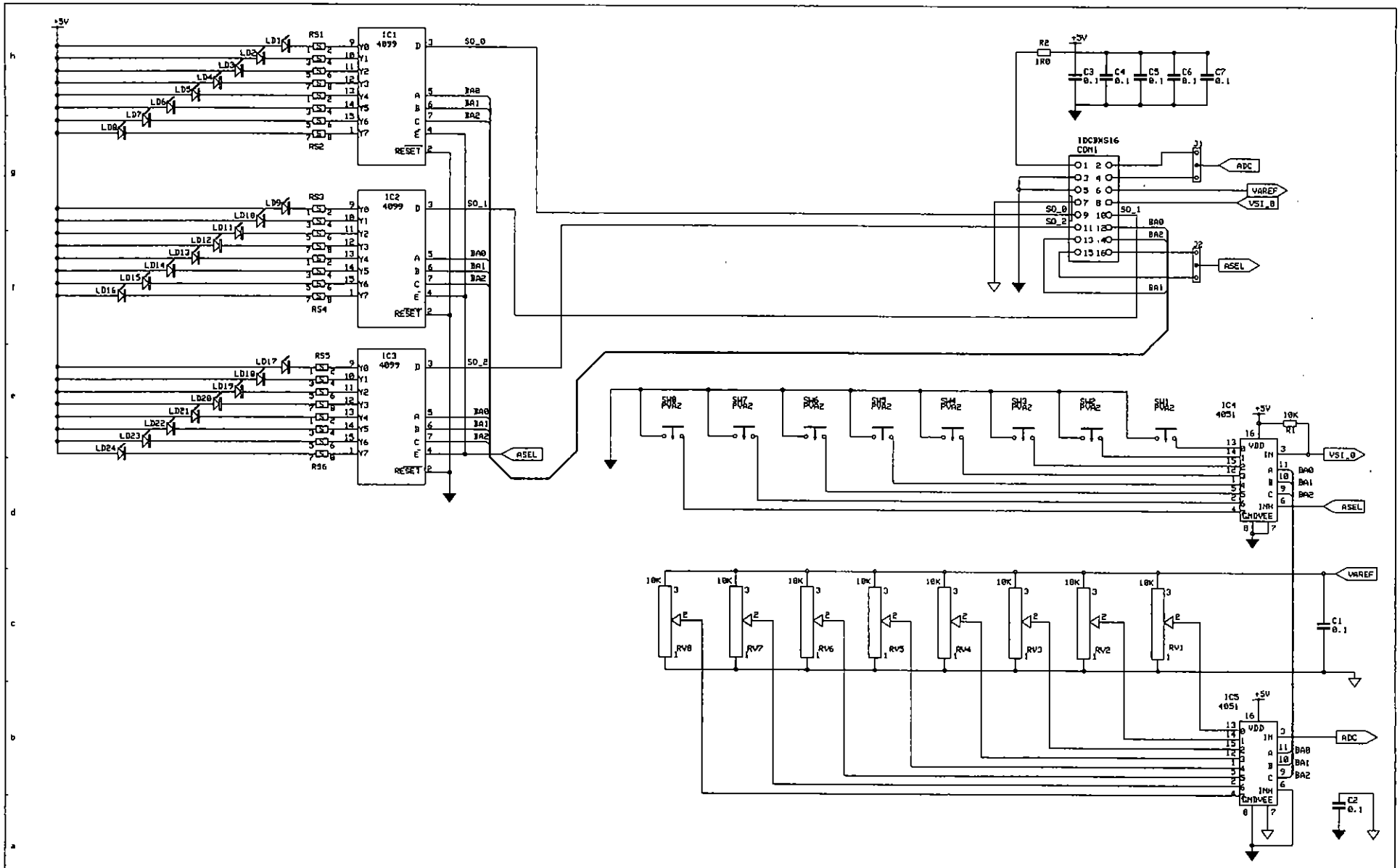

ISS.	REVISION	FILE	BY DATE
1	PRODUCTION	S3V_SLV3.FSH	IS 26/01/93
2		S3V_SLV4.FSH	IS 9/02/93
3			
4			

NOTES:

1. ALL RESISTORS 5% 1/4W UNLESS OTHERWISE SPECIFIED
2. ELECTROLYTIC CAPACITORS ARE µF/VOLTS
3. / = ACTIVE LOW

UNIT TITLE: GS3V VCA SLAVE PCB

DRAWING TITLE: LEDS & FADERS (1 OF 1)

ALLEN & HEATH LTD.
KERNICK IND' EST'
PENRYN
CORNWALL TR10 9LU

DRAWING No. D143 ISSUE 2

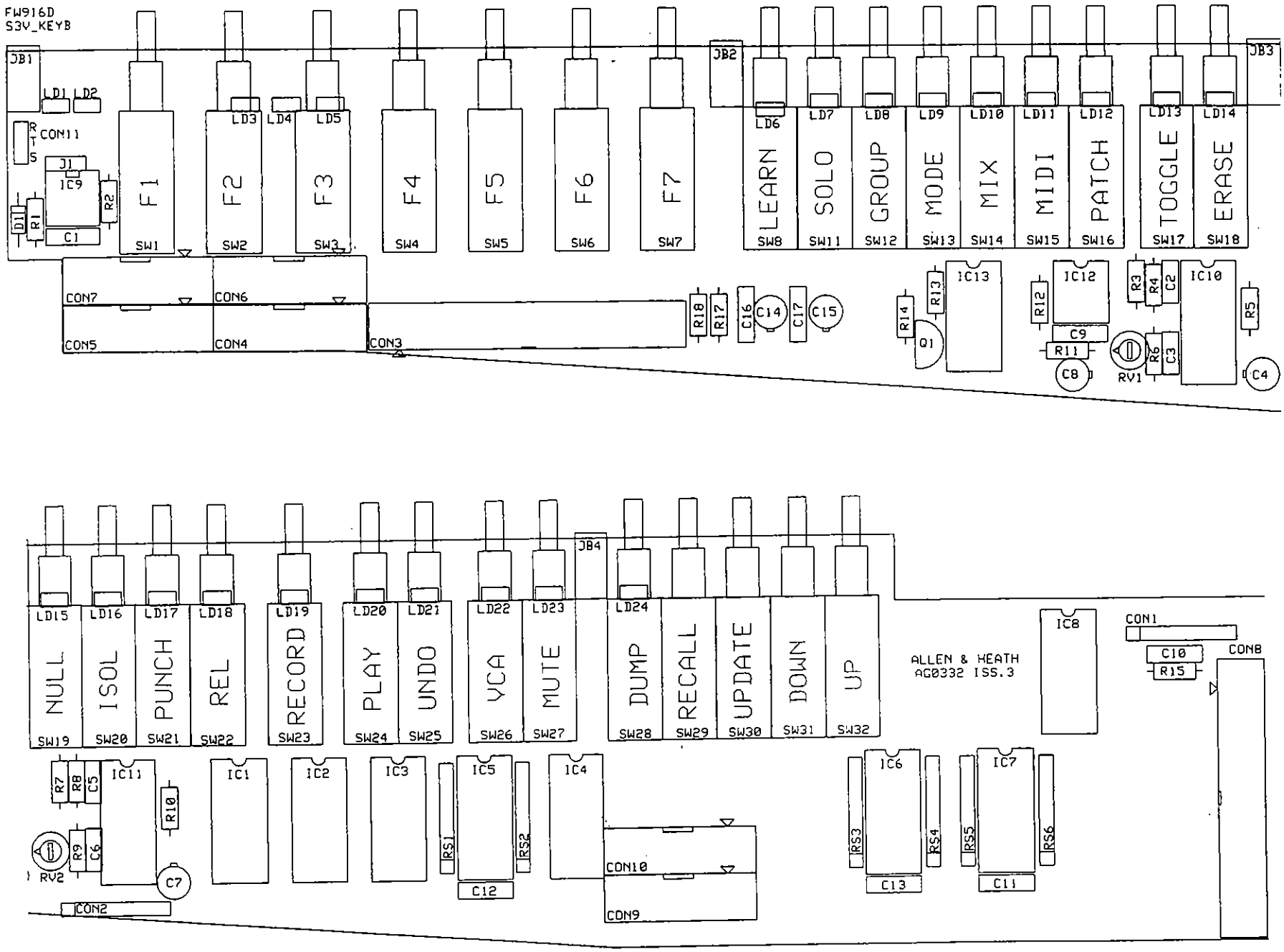
FW916D
S3V_KEYB
JB1
JB2
JB3
JB4
LD1
LD2
LD3
LD4
LD5
LD6
LD7
LD8
LD9
LD10
LD11
LD12
LD13
LD14
LD15
LD16
LD17
LD18
LD19
LD20
LD21
LD22
LD23
LD24
CON11
J1
IC9
R1
R2
D1
C1
F1
F2
F3
F4
F5
F6
F7
LEARN
SOLO
GROUP
MODE
MIX
MIDI
PATCH
TOGGLE
ERASE
SW1
SW2
SW3
SW4
SW5
SW6
SW7
SW8
SW11
SW12
SW13
SW14
SW15
SW16
SW17
SW18
CON7
CON6
CON5
CON4
CON3
R18
R17
C16
C14
C17
C15
R14
R13
Q1
IC13
R12
IC12
C9
R11
C8
R3
R4
C2
IC10
R5
R6
C3
RV1
C4
NULL
ISOL
PUNCH
REL
RECORD
PLAY
UNDO
VCA
MUTE
DUMP
RECALL
UPDATE
DOWN
UP
SW19
SW20
SW21
SW22
SW23
SW24
SW25
SW26
SW27
SW28
SW29
SW30
SW31
SW32
ALLEN & HEATH
AG0332 ISS.3
IC8
CON1
C10
R15
CON8
R7
R8
C5
IC11
R10
R9
C6
RV2
C7
IC1
IC2
IC3
IC5
IC4
RS1
RS2
C12
CON10
CON9
CON2
IC6
IC7
RS3
RS4
RS5
RS6
C13
C11

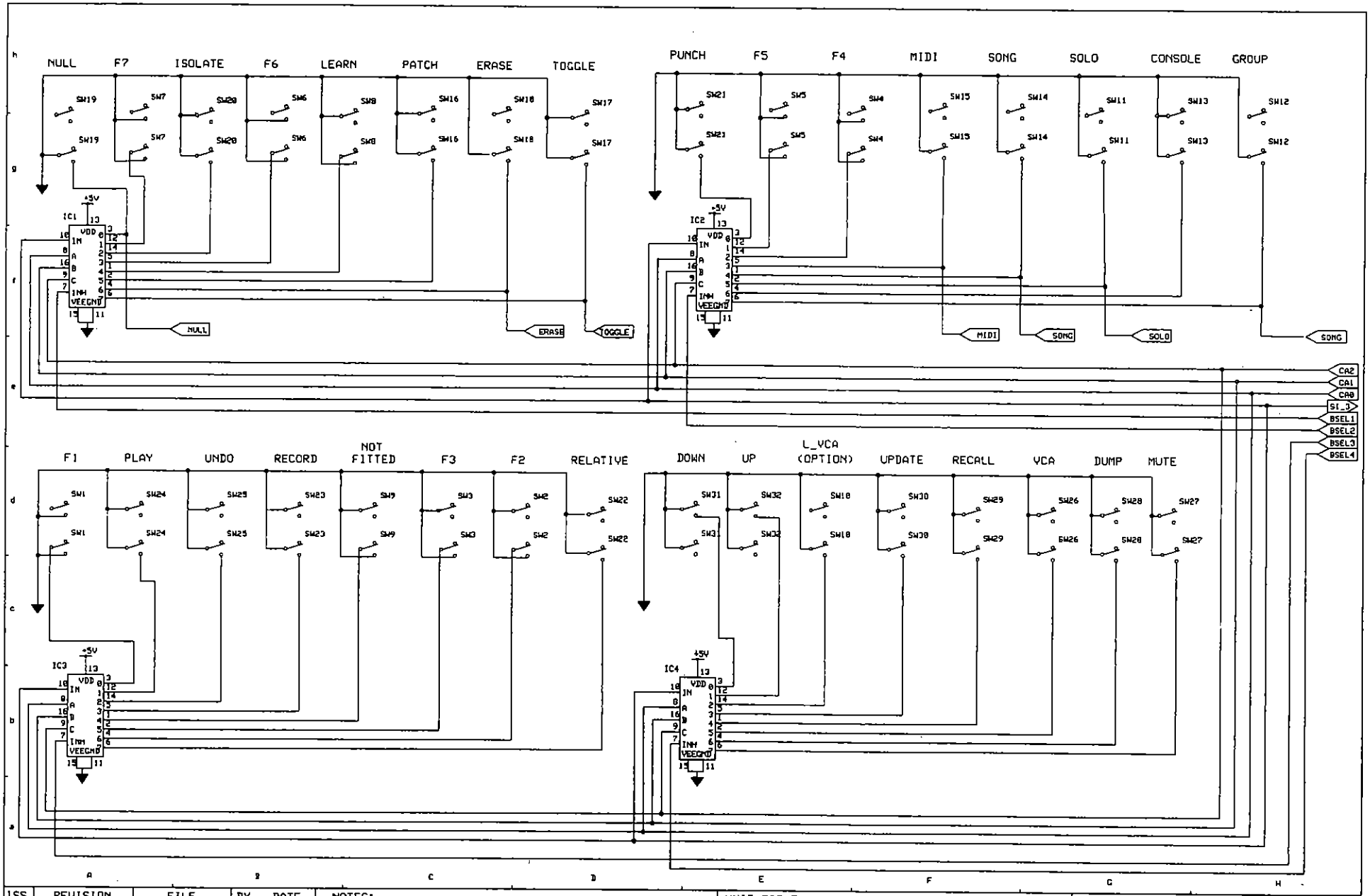

ISS.	REVISION	FILE	BY	DATE
1	PRODUCTION	S3V_KYB2.FSH	INS	26/10/92
2				
3				
4				

NOTES:

1. ALL RESISTORS 5% 1/4W UNLESS OTHERWISE SPECIFIED
2. ELECTROLYTIC CAPACITORS ARE µF/VOLTS
3. / = ACTIVE LOW

UNIT TITLE: GS3V KEYBOARD PCB

DRAWING TITLE: SWITCHES (1 OF 3)

PCB No: AG0332

ALLEN & HEATH LTD.
KERNICK INDUSTRIAL ESTATE,
PENRYN
CORNWALL TR10 9LU

DRAWING No. D929 ISSUE 1

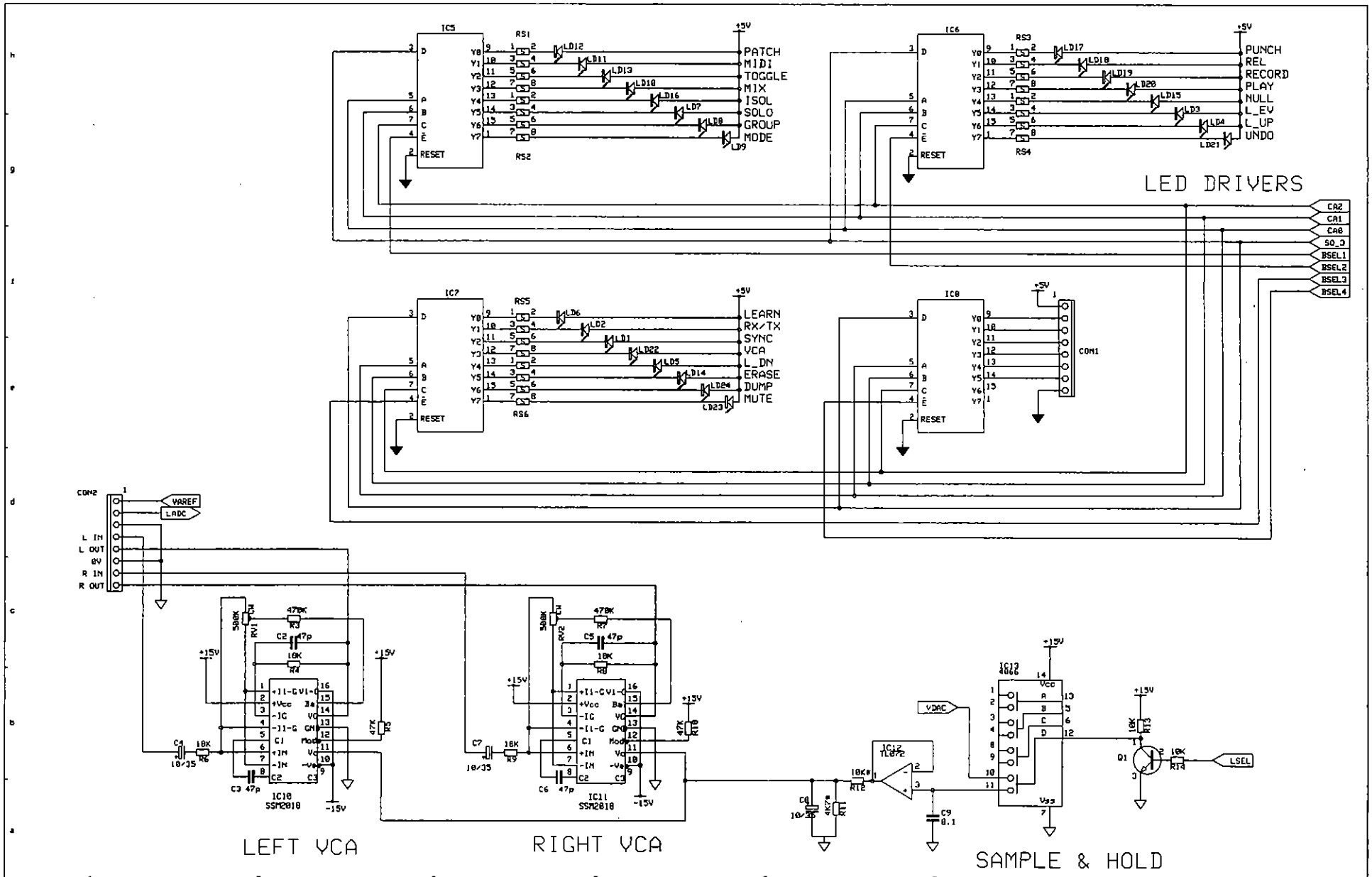

ISS.	REVISION	FILE	BY	DATE
1	PRODUCTION	S3V_KYB2.FSH	INS	26/10/92
2				
3				
4				

NOTES:

1. ALL RESISTORS 5% 1/4W UNLESS OTHERWISE SPECIFIED
2. ELECTROLYTIC CAPACITORS ARE µF/VOLTS
3. / = ACTIVE LOW
4. SIL RESISTORS 1K0 x 4 8-PIN

UNIT TITLE: GS3V KEYBOARD PCB

DRAWING TITLE: LEDS & VCAS (2 OF 3)

PCB No: AG0332

ALLEN & HEATH LTD.
KERNICK INDUSTRIAL ESTATE,
PENRYN
CORNWALL TR10 9LU

DRAWING No. D929 ISSUE 1

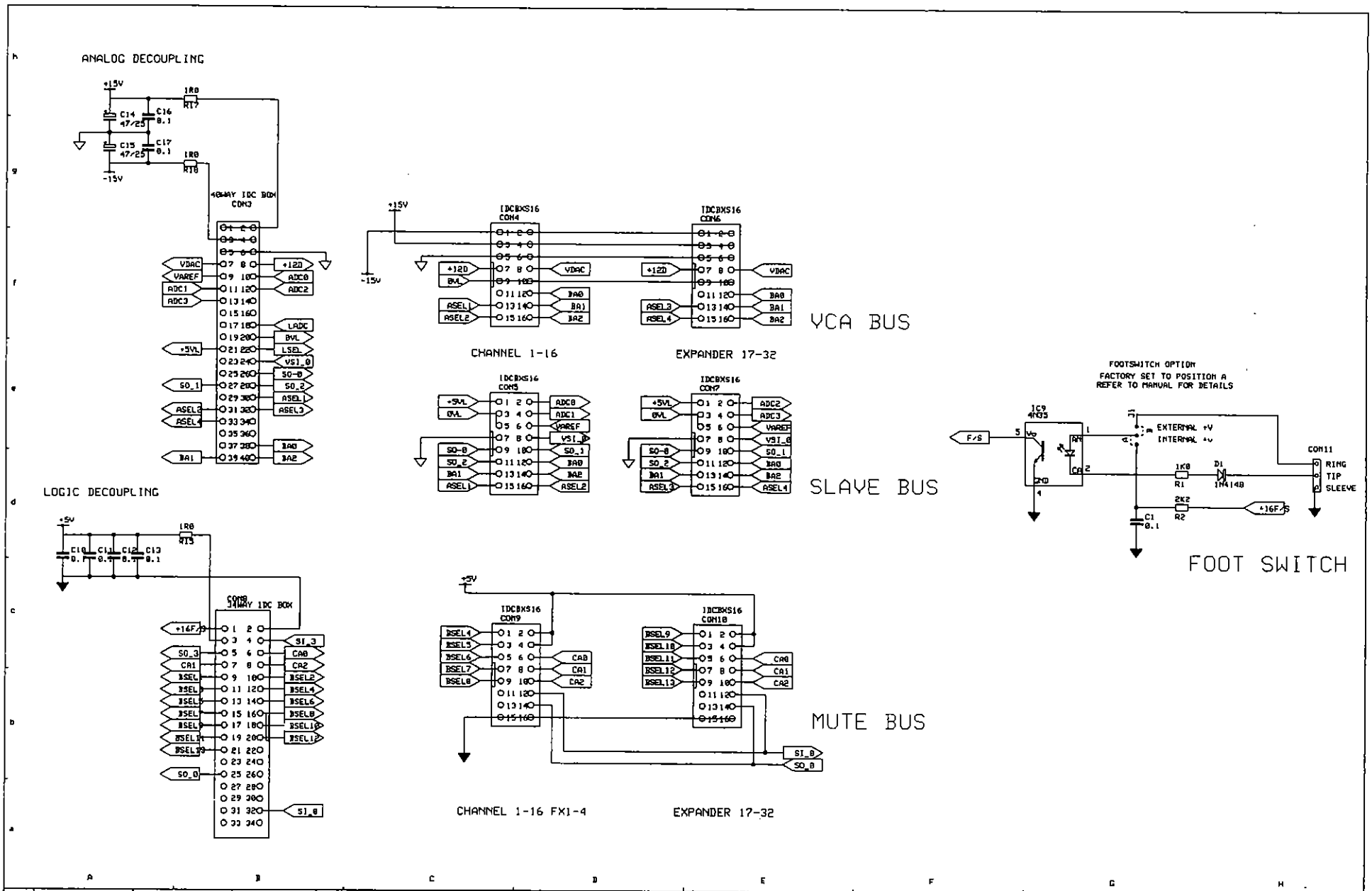

ISS.	REVISION	FILE	BY	DATE
1	PRODUCTION	S3V_KYB2.FSH	INS	26/10/92
2				
3				
4				

NOTES:

1. ALL RESISTORS 5% 1/4W UNLESS OTHERWISE SPECIFIED
2. ELECTROLYTIC CAPACITORS ARE µF/VOLTS
3. / = ACTIVE LOW

UNIT TITLE: GS3V KEYBOARD PCB

DRAWING TITLE: CONNECTORS (3 OF 3)

PCB No: AC0332

ALLEN & HEATH LTD.
KERNICK INDUSTRIAL ESTATE,
PENRYN
CORNWALL TR10 9LU

DRAWING No. D929 ISSUE 1

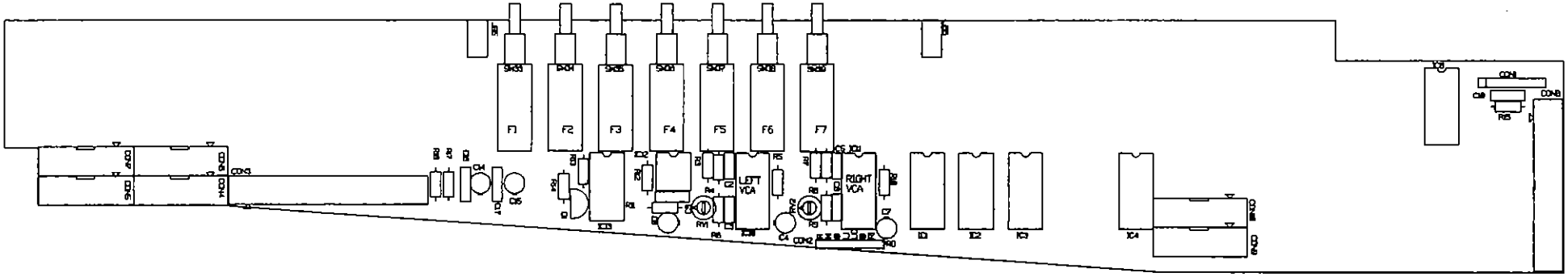

S3 KEYBOARD PCB FW916DU

ADDITIONAL SWITCHES
FOR S3 UPGRADE

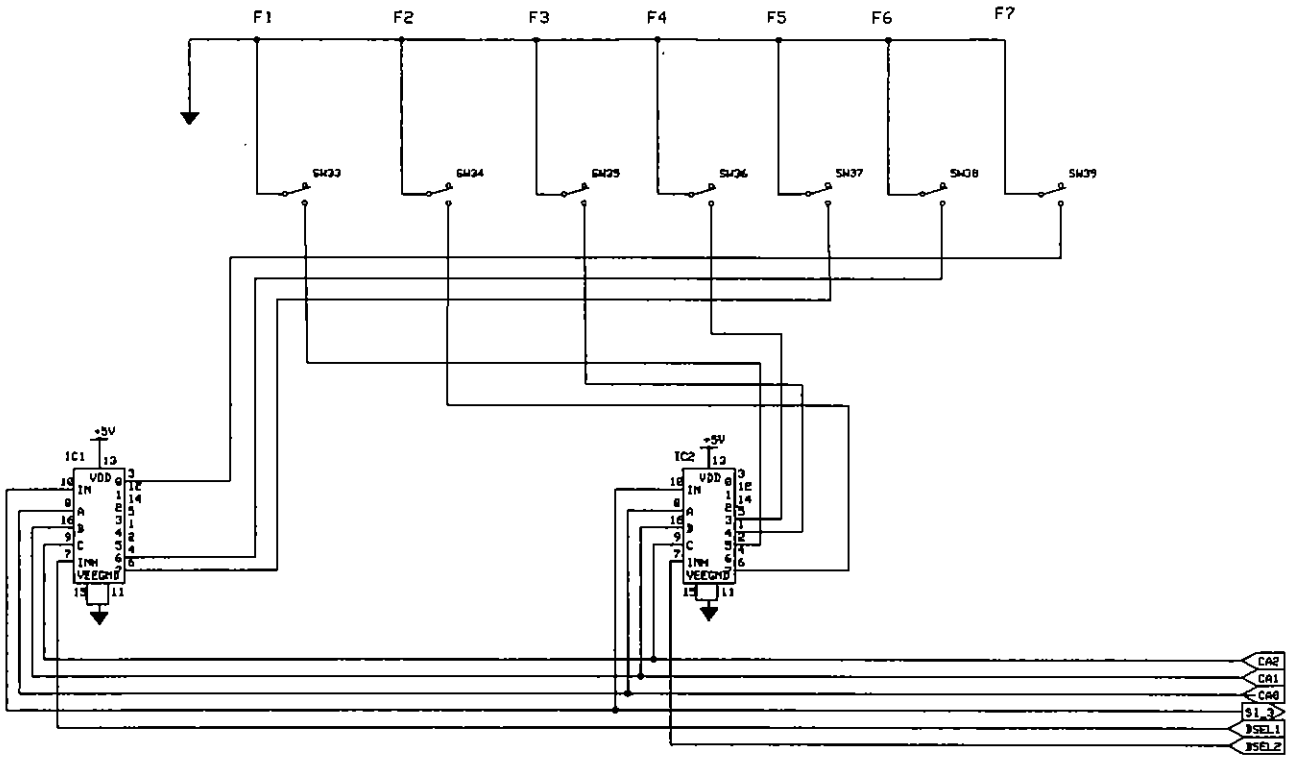

ISS.	REVISION	FILE	BY DATE
1	PRODUCTION	S3UP_KYB.FSH	INS 26/10/92
2			
3			
4			

NOTES:

1. ALL RESISTORS 5% 1/4W UNLESS OTHERWISE SPECIFIED
2. ELECTROLYTIC CAPACITORS ARE µF/VOLTS
3. / = ACTIVE LOW

UNIT TITLE
GS3 V5 UPGRADE KEYBOARD PCB

DRAWING TITLE (1 OF 3)
SWITCHES

ALLEN & HEATH LTD.
KERNICK IND' EST'
PENRYN
CORNWALL TR10 9LU

DRAWING No. D931 ISSUE 1

7-SEGMENT DISPLAY DRIVER

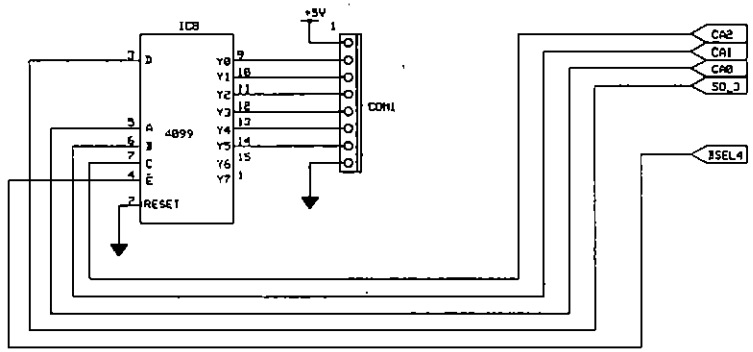

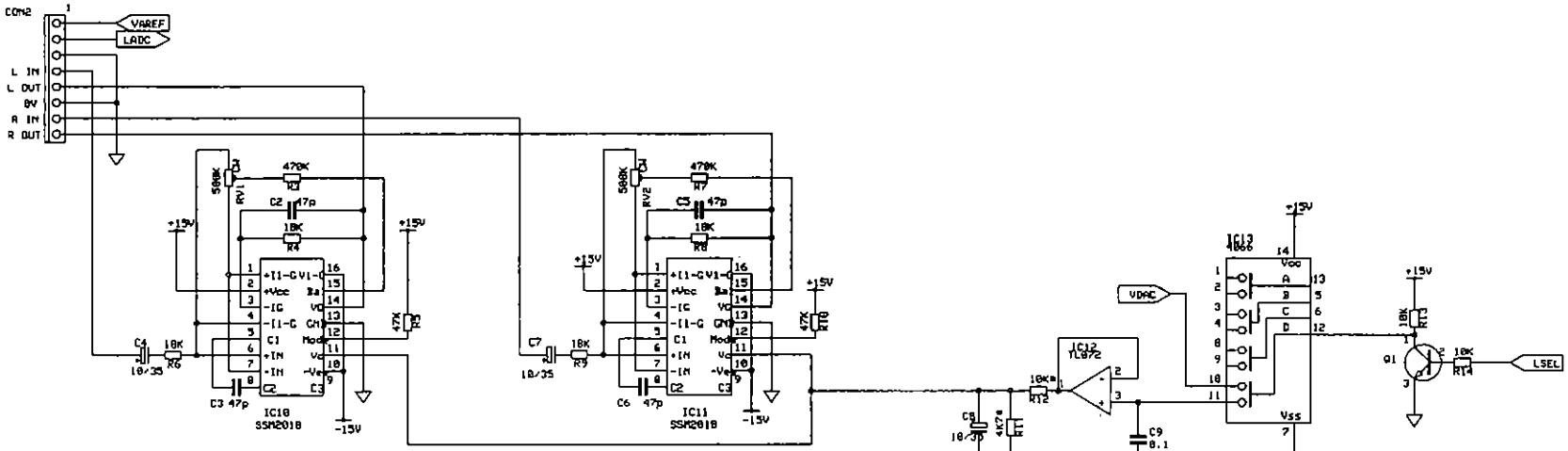

LEFT VCA

RIGHT VCA

SAMPLE & HOLD

ISS.	REVISION	FILE	BY DATE
1	PRODUCTION	S3UP_KYB.FSH	INS 26/10/92
2			
3			
4			

NOTES:

1. ALL RESISTORS 5% 1/4W UNLESS OTHERWISE SPECIFIED
2. ELECTROLYTIC CAPACITORS ARE µF/VOLTS
3. / = ACTIVE LOW
4. SIL RESISTORS 1K0 x 4 8-PIN

UNIT TITLE
GS3 V5 UPGRADE KEYBOARD PCB

DRAWING TITLE (2 OF 3)
LEDS & VCAS

ALLEN & HEATH LTD.
KERNICK IND' EST'
PENRYN
CORNWALL TR10 9LU

DRAWING No. D931 ISSUE 1

ANALOG DECOUPLING

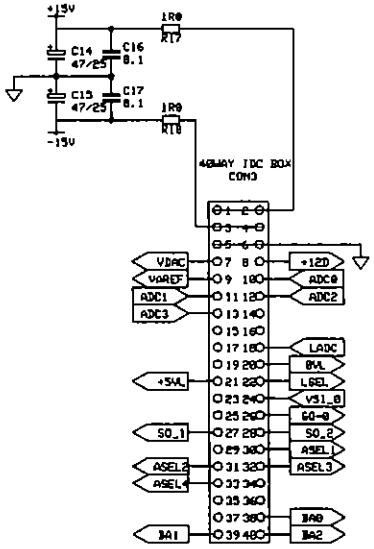

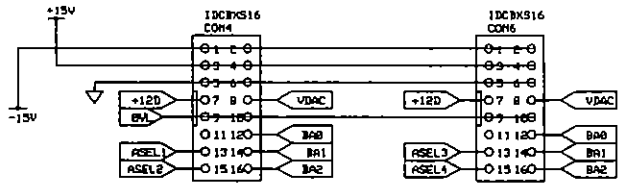

CHANNEL 1-16

EXPANDER 17-32

VCA BUS

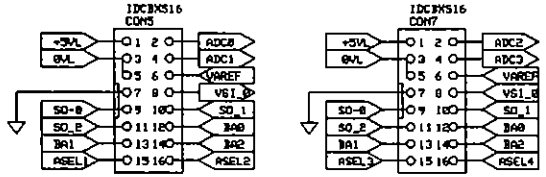

SLAVE BUS

LOGIC DECOUPLING

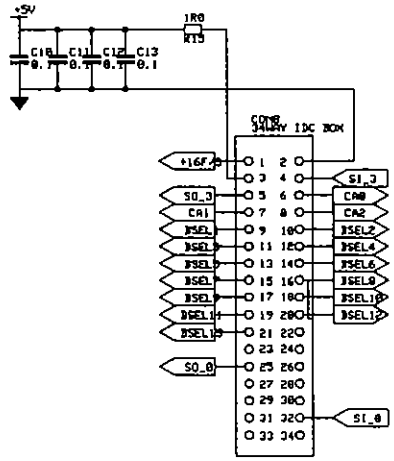

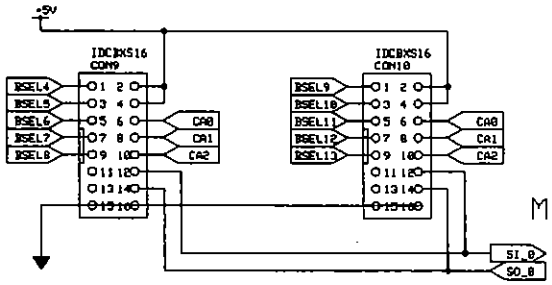

CHANNEL 1-16 FX1-4

EXPANDER 17-32

MUTE BUS

ISS.	REVISION	FILE	BY DATE
1	PRODUCTION	S3UP_KYB.FSH	INS 26/10/92
2			
3			
4			

NOTES:

1. ALL RESISTORS 5% 1/4W UNLESS OTHERWISE SPECIFIED
2. ELECTROLYTIC CAPACITORS ARE µF/VOLTS
3. / = ACTIVE LOW

UNIT TITLE
GS3 V5 UPGRADE KEYBOARD PCB

DRAWING TITLE (3 OF 3)
CONNECTORS

ALLEN & HEATH LTD.
KERNICK IND' EST'
PENRYN
CORNWALL TR10 9LU

DRAWING No. D931 ISSUE 1

FW914D

Y_MICRO PCB

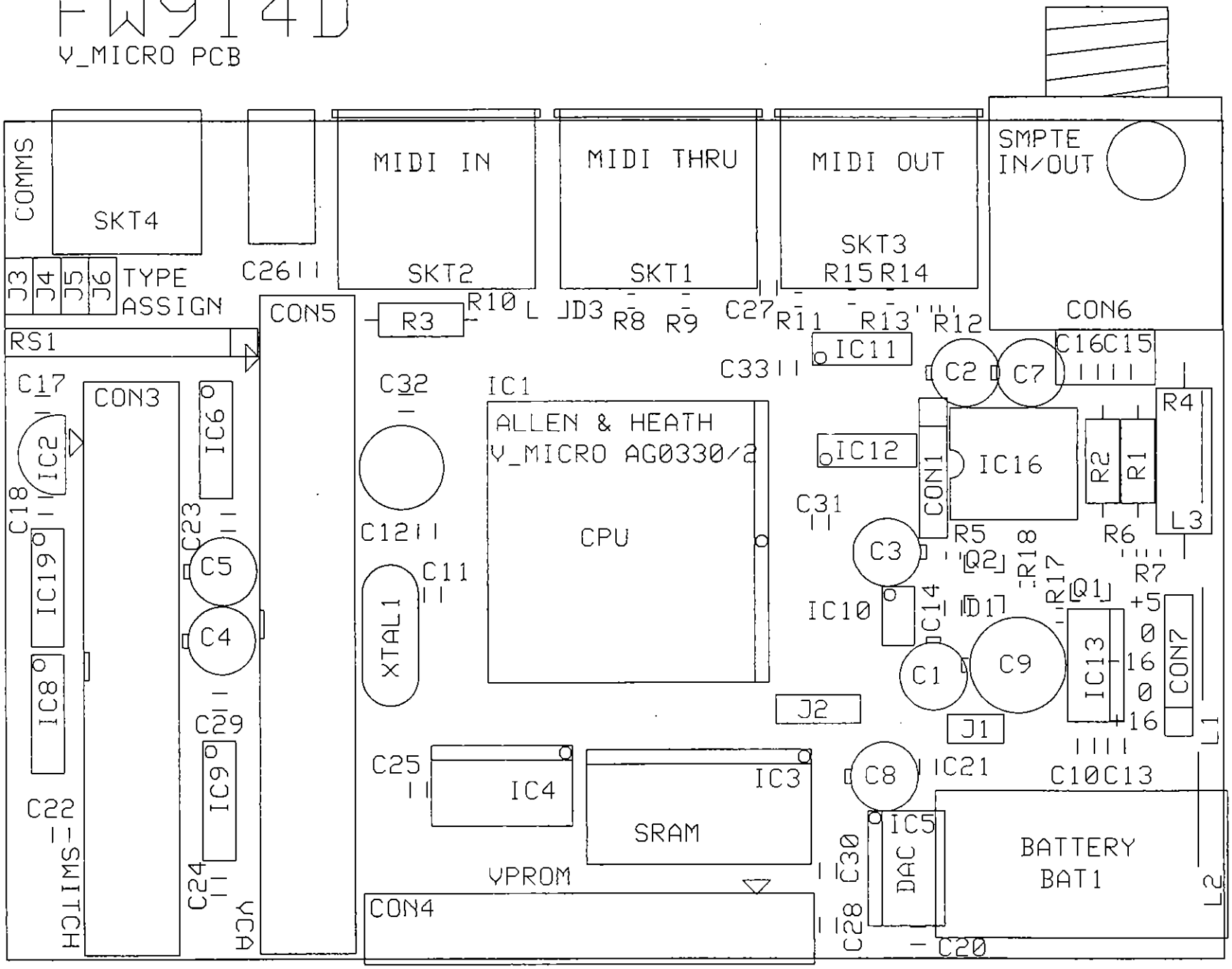

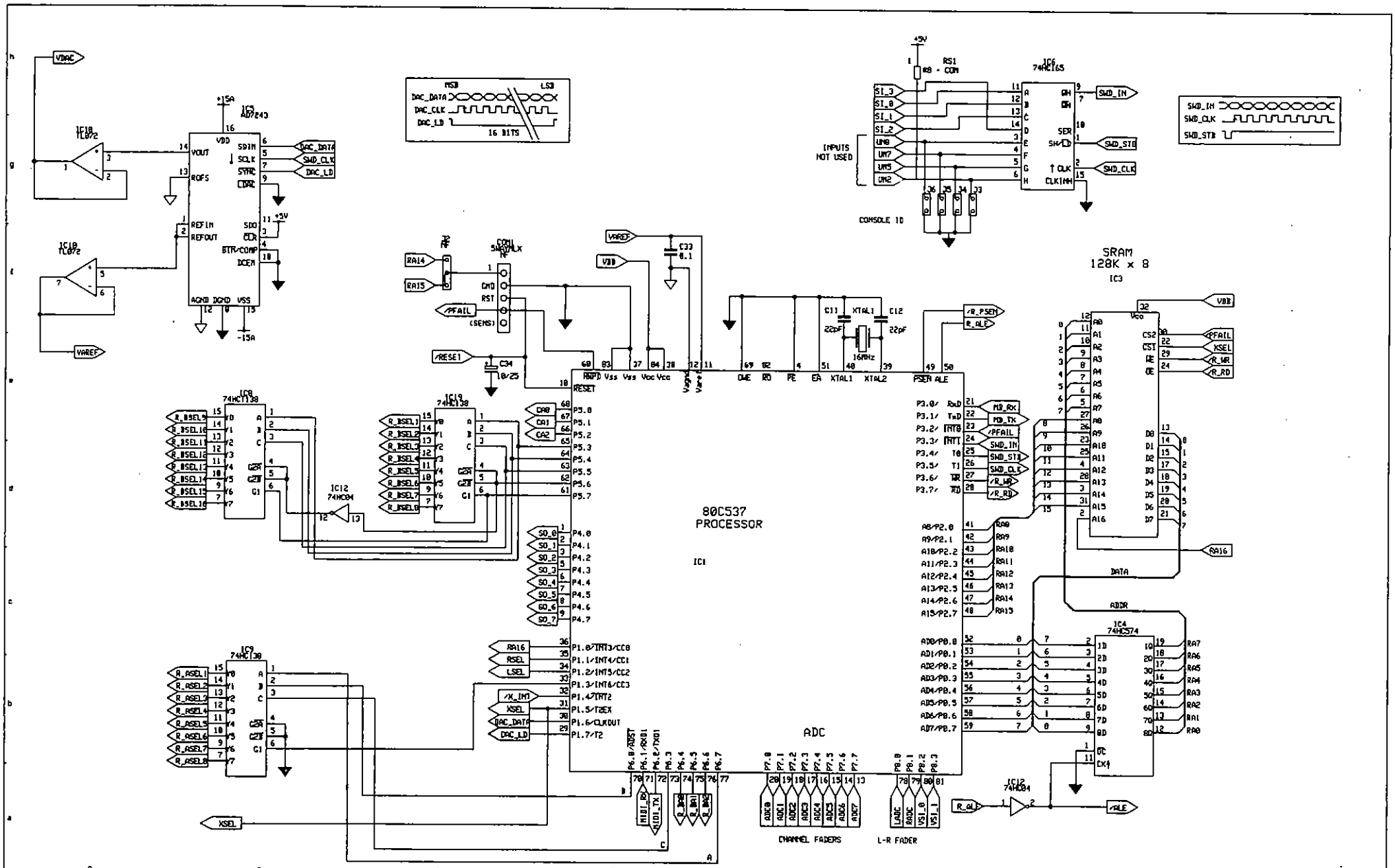

ISS.	REVISION	FILE	BY DATE
1	PRODUCTION	V_MICRO2.FSH	INS 2/11/92
2	CORRECTIONS		IMB 2/11/93

NOTES

1. ALL RESISTORS 5% 1/4W UNLESS OTHERWISE MARKED
2. ELECTROLYTIC CAPACITORS ARE µF/VOLTS
3. / = ACTIVE LOW

UNIT TITLE
'V' SERIES MICRO PCB

DRAWING TITLE (1 OF 2)
MICRO-PROCESSOR

MANUFACTURED IN ENGLAND BY
ALLEN & HEATH

DRAWING No. D928 ISSUE 2

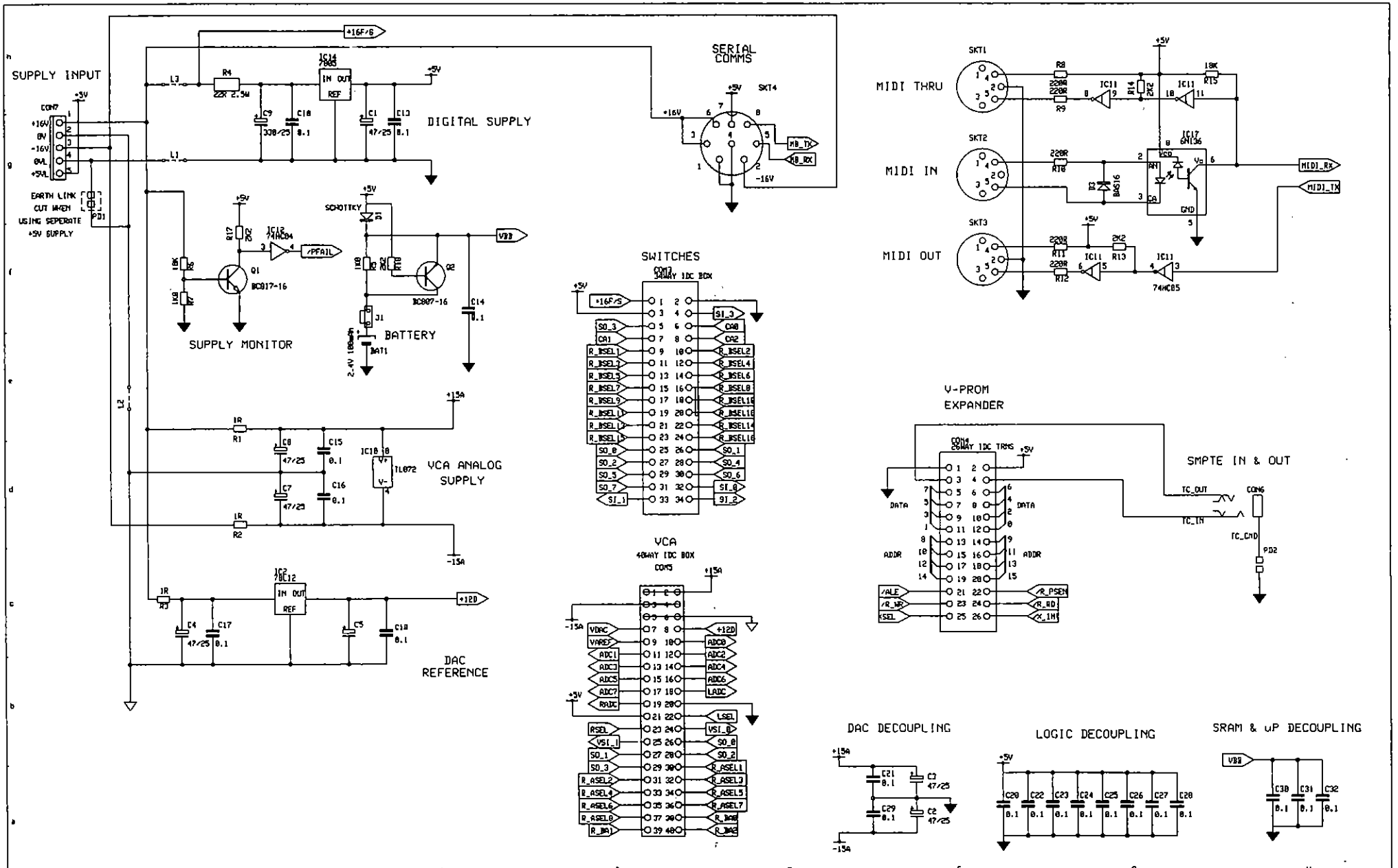

ISS.	REVISION	FILE	BY	DATE
1	PRODUCTION	V_MICRO2.FSH	JNS	2/11/92
2	CORRECTIONS		JMB	2/11/93

NOTES

1. ALL RESISTORS 5% 1/4W UNLESS OTHERWISE MARKED
2. ELECTROLYTIC CAPACITORS ARE µF/VOLTS
3. / = ACTIVE LOW

UNIT TITLE
'V' SERIES MICRO PCB

DRAWING TITLE (2 OF 2)
CONNECTORS

MANUFACTURED IN ENGLAND BY
ALLEN & HEATH

DRAWING No. D928 ISSUE 2

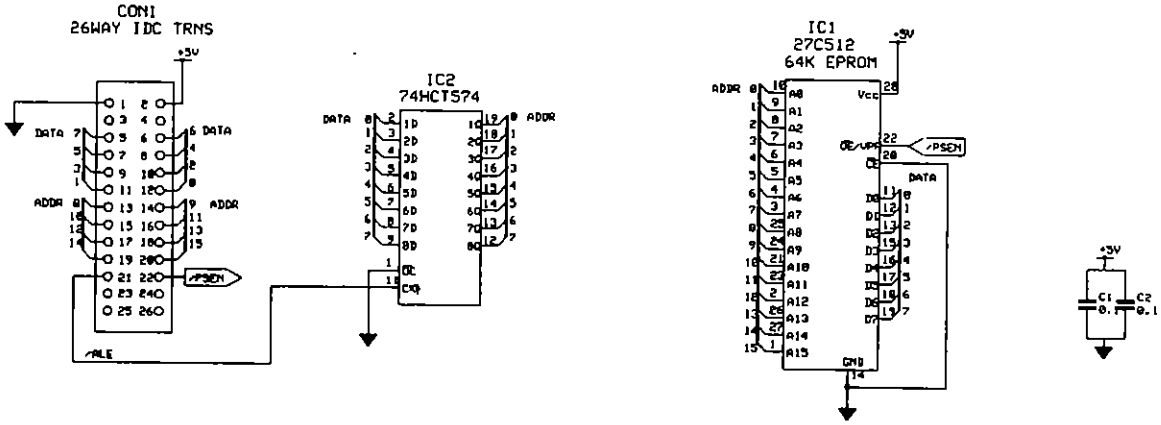

GS3V V-PROM PCB
FW915D

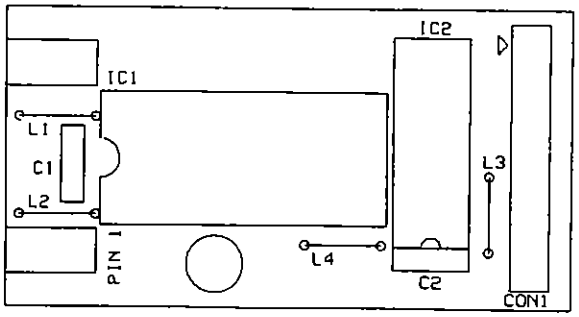

ISS.	REVISION	FILE	BY DATE
1	PRODUCTION	S3V_PRG3.FSH	INS 10/12/92

NOTES:

1. ALL RESISTORS 5K 1/4W UNLESS OTHERWISE SPECIFIED
2. ELECTROLYTIC CAPACITORS ARE µF/VOLTS
3. / = ACTIVE LOW

UNIT TITLE: GS3V V-MICRO

DRAWING TITLE: V-PROM MODULE

PCB No: AG0331

ALLEN & HEATH LTD.
KERNICK INDUSTRIAL ESTATE
PENRYN
CORNWALL TR10 9LU

DRAWING No. D930 ISSUE 1

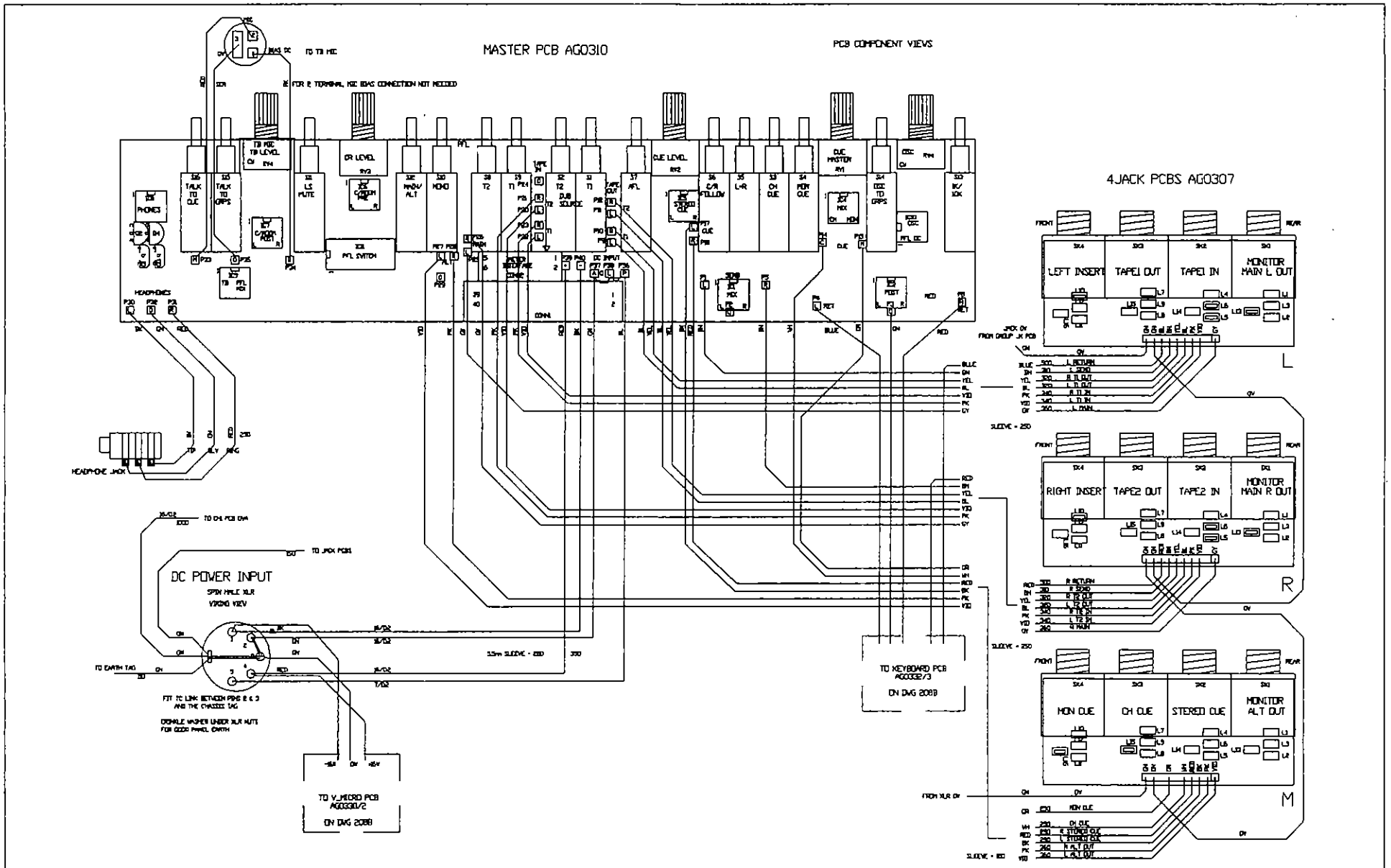

ISSUE	REVISION	BY	DATE
1	ORIGIN		27/1/93

STANDARD NOTES
ALL DIMENSIONS IN MM
DO NOT SCALE DRAWING
REMOVE ALL BURRS & SHARP EDGES
THIRD ANGLE PROJECTION

MATERIAL

TOLERANCES

FINISH

DRAWING TITLE
GS3V MASTER WIRING
MASTER SECTION

ALLEN & HEATH BRENELL LTD.
KERNICK INDUSTRIAL ESTATE.
PENRYN. CORNWALL TR10 9LU.
TEL 0326 72070
FAX. 0326 77097

DRAWING No. D208A ISSUE 1

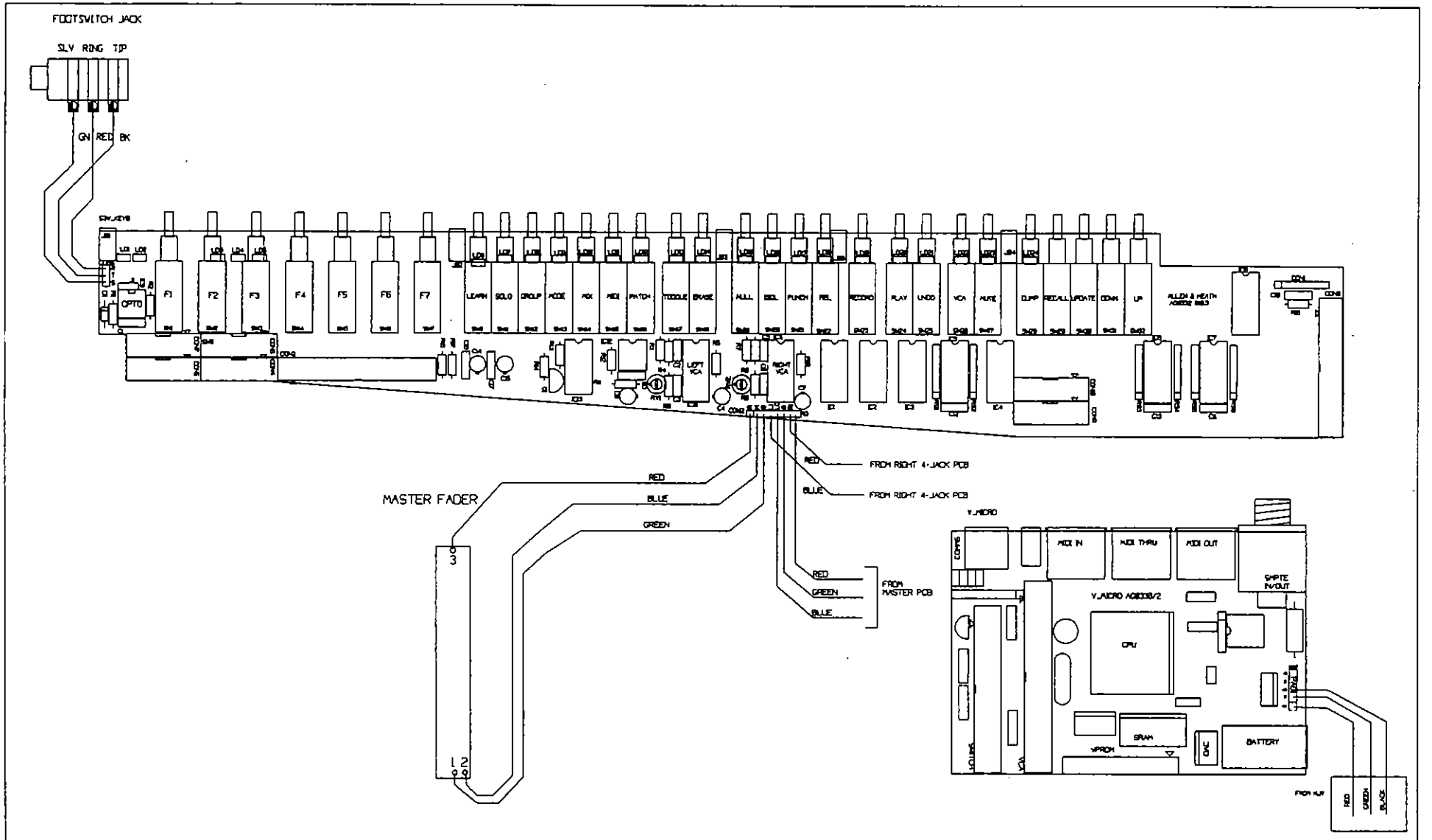

ISSUE	REVISION	BY	DATE
1	ORIGIN		27/1/93

STANDARD NOTES
ALL DIMENSIONS IN mm
DO NOT SCALE DRAWING
REMOVE ALL BURRS & SHARP EDGES
THIRD ANGLE PROJECTION

MATERIAL

TOLERANCES

FINISH

DRAWING TITLE
GS3V MASTER WIRING
V_MICRO & KEYBOARD

ALLEN & HEATH BRENELL LTD
KERNICK INDUSTRIAL ESTATE,
PENRYN, CORNWALL TR10 9LU.
TEL 0326 72070
FAX 0326 77097

DRAWING No D208B ISSUE 1

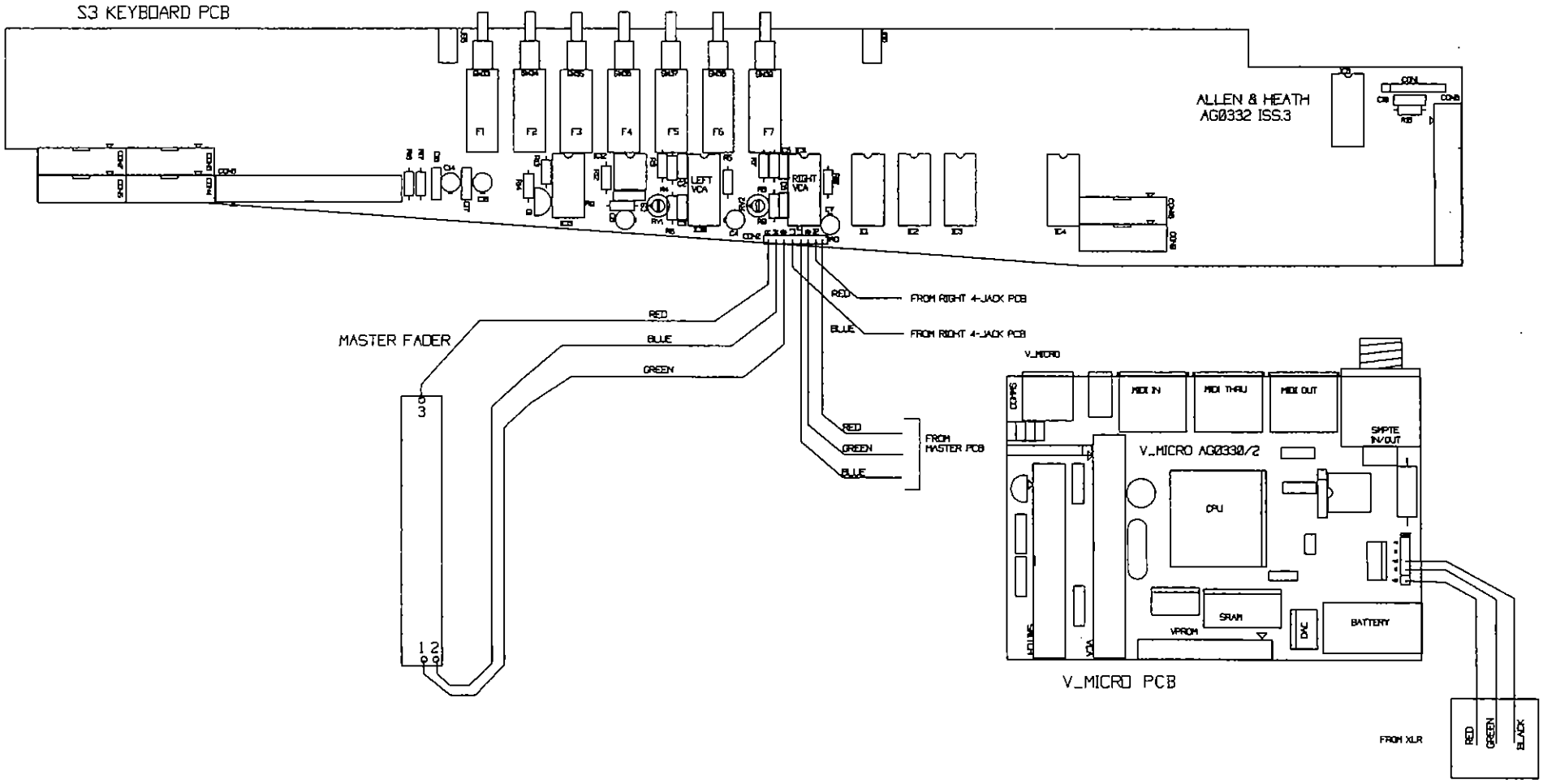

ISSUE	REVISION	BY	DATE
1	ORIGIN	MEB	1/01/93

NOTES:

SEE TECHNICAL BULLETINS GS3V_01 & GS3V_02.

DRAWING TITLE

GS3 V5 VCA UPGRADE
V_MICRO & KEYBOARD
ASSEMBLY WIRING.

ALLEN & HEATH LTD.
KERNICK INDUSTRIAL ESTATE.
PENRYN. CORNWALL TR10 9LU.

DRAWING No: D208BU ISSUE 1

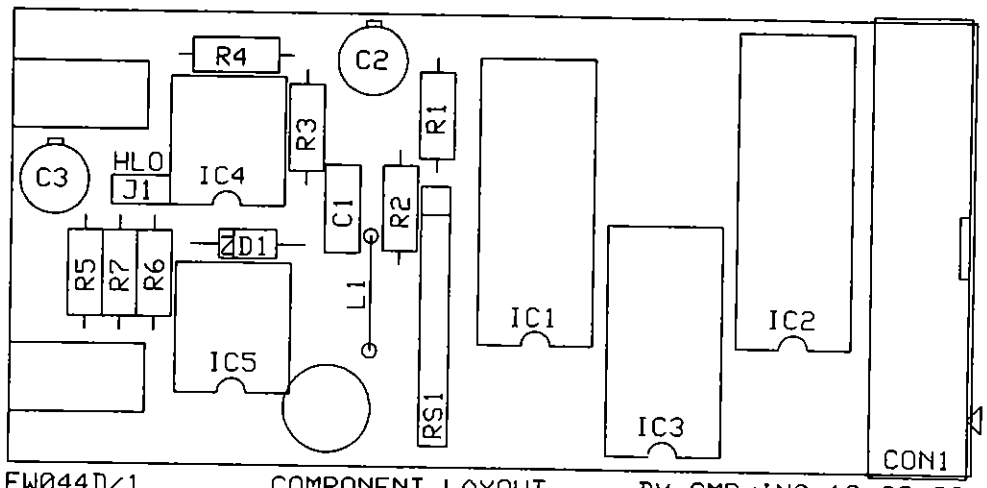

FW044D/1 COMPONENT LAYOUT BY GMR/INS 18/03/93

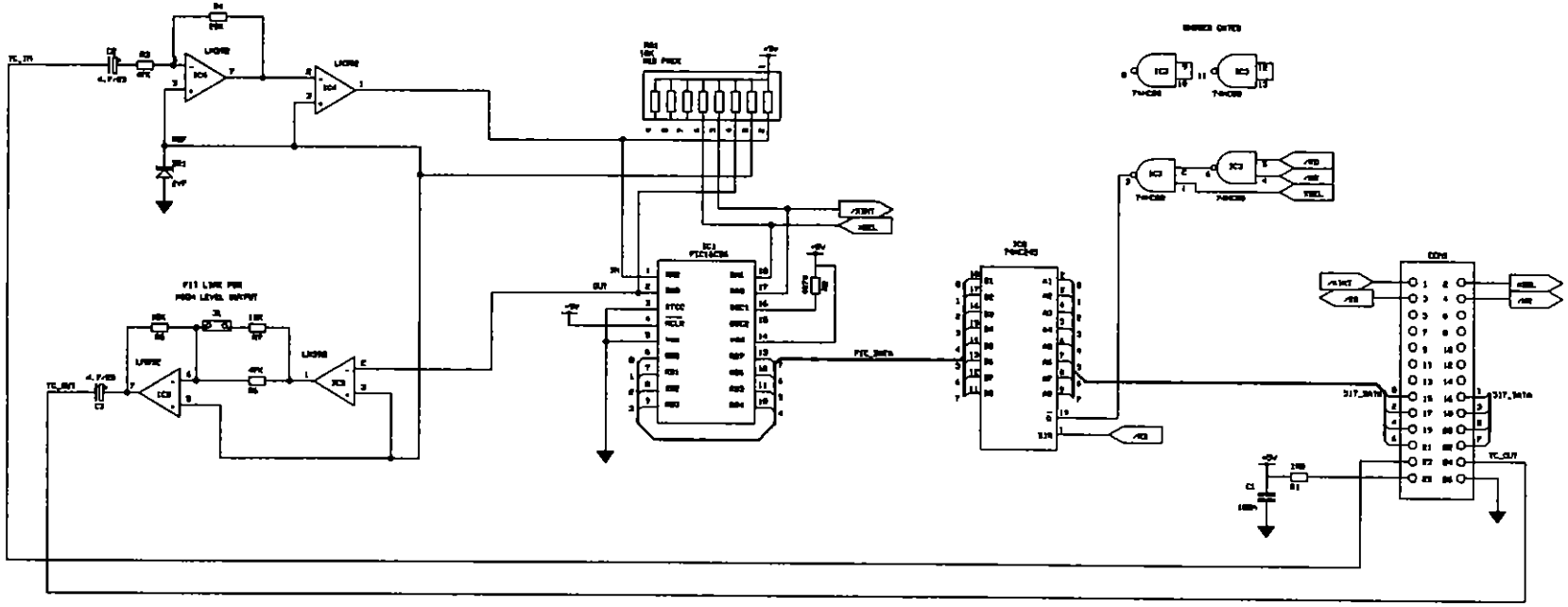

ISS.	REVISION	FILE	BY DATE
1	ORIGIN	3V_SMPTE.FSH	INS 15/3/93
2	CORRECTIONS		IMB 2/11/93
3			
4			

NOTES:

1. ALL RESISTORS 5% 1/4W UNLESS OTHERWISE SPECIFIED
2. ELECTROLYTIC CAPACITORS ARE µF/VOLTS
3. / = ACTIVE LOW

UNIT TITLE: GS3V

DRAWING TITLE: SMPTE OPTION PCB

ALLEN & HEATH LTD.
KERNICK IND' EST'
PENRYN
CORNWALL TR10 9LU

DRAWING No. D212 ISSUE 2

THE STANDARD BALANCE OPTION
CONVERTS LOW LEVEL (-10dBV) GS3
OPERATION TO HIGH LEVEL (+4dBu)
MULTITRACK OPERATION.

IF THIS CONVERSION IS NOT
REQUIRED REPLACE R1,R2 & R5 WITH
8K2 RESISTORS, AND REMOVE R7.
THIS GIVES 0dB GAIN THROUGH THE OPTION.

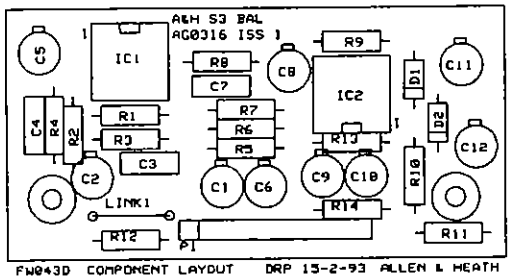

ISS.	REVISION	BY	DATE
ISS1	ORIGIN	DRP	14-10-93

NOTES
1. RESISTORS MARKED * ARE 1% ALL OTHERS ARE 5% 1/4W UNLESS OTHERWISE MARKED
2. ELECTROLYTIC CAPACITORS ARE µF/VOLTS

UNIT TITLE
S3

DRAWING TITLE
BALANCED MULTITRACK OPTION
CIRCUIT DIAGRAM

MANUFACTURED IN ENGLAND BY
ALLEN & HEATH

DRAWING No. D209 ISSUE 1