BACKLINE 110 & 112

BASS COMBO AMPLIFIER

Owner's Manual



GK GALLIEN-KRUEGER

Safety Information.....4
Introduction.....5
Setup & Maintenance.....6
Controls.....7
Sample Settings.....8
Tech Talk.....9
Specifications.....10

**All Features and specifications are subject to change without notice*
***This list is subject to change without notice.*



Safety Information

Please read all enclosed safety precautions, before connecting or operating this product.

Verify Line Voltage and Amperage Before Use:
Your new MicroBass Series amplifier has been factory configured for use with:

120 Volt/60Hz 15 A circuit for USA/Canada.
230 Volt/50Hz 10 A circuit for UK/Australia.
240 Volt/50Hz 10 A circuit for Europe.
100 Volt/50Hz 15 A circuit for Japan.
220 Volt/50Hz 10 A circuit for Korea.

Connecting the amplifier to a line with specifications other than indicated above can create a safety or fire hazard and may damage the amplifier. If you have any questions about the voltage requirements for your specific model, or about the line voltage in your area, contact your dealer before plugging the unit into a wall outlet.

Verify AC Circuit Capacity Before Use:
The high power output of your amplifier may require heavy current draw under full-load conditions. To insure proper performance and avoid potential safety hazards, we recommend connection to line circuits with amperage specified "as above". Connecting multiple amplifiers to the same circuit, or connecting the amplifier to the same circuit used by other heavy-power devices, such as high-wattage lights, may cause circuit breakers to trip. It is always a good idea to avoid using any audio equipment on the same AC circuit as equipment with motors, such as air conditioners or refrigerators. This will lessen the possibility of power variation and electrical start-up noise affecting your sound.

AC Power Cord:
To avoid safety hazards, use only the power cord supplied with your unit. If a replacement cord is needed, make certain that to use a standard IEC compliant cord. Damaged power cords should be replaced immediately.

Connecting to AC Power:
When setting up, make certain that the AC plug is easily accessible. If mounting in a rack, ensure that the AC mains can be easily disconnected by a plug or by an all-pole disconnect switch on or near the rack.

Disconnect When Not In Use:
If you do not intend to use the amplifier for a considerable length of time, disconnect the plug from the AC outlet. Just switching the unit off does not mean that it is fully disconnected from the AC Mains. To isolate the unit from the AC mains, you must disconnect the power cord from the unit and the AC outlet. When disconnecting the power cord always pull from the plug, never pull from the cord.

Do Not Open the Amplifier Enclosure:
There are no user-serviceable components inside this product. Opening the amplifier enclosure may present a shock hazard, and modification to the product will void your warranty. If liquid enters the unit, or any metal object such as a paper clip, wire, or staple accidentally falls inside the enclosure, disconnect the unit from the AC power source immediately and consult an authorized service station.

Unpacking:
The carton and packing materials used in shipping your new amplifier were specifically designed to cushion it from the shocks and vibration that occur during transport. We suggest that you save the carton and packing materials for use in shipping, in the event you move, or the amplifier needs repair.

Congratulations

Your purchase of a new Gallien-Krueger Backline Series product is surely the result of much careful consideration on your part. For our part, we at Gallien-Krueger are pleased that you chose us, and are determined that you will be a satisfied customer. In choosing a Backline Series product, you now own a combo with many unique features, which will allow to create your own distinct sound.

To get the most out of your new purchase please take a few minutes to read through this manual. If you are in a hurry, we suggest you at least read through the Quick Start section before setting up your new rig. This will help get you started and give you a few quick tips, but is not a substitute for reading the rest of the manual.

Your amplifier should have come with the following items, please check the contents of the box to ensure that you have everything.

Included with your Backline Combo:	
Backline 110 or 112	1
Power cord	1
Owner's manual	1
Warranty card	1
Safety instructions sheet	1

If your Backline Series combo did not come with all the items listed, or if you encounter problems while setting up your new equipment, please contact your local dealer, or us as soon as possible.

Gallien-Krueger, Inc.
2234 Industrial Drive
Stockton, CA 95206
phone: (209) 234-7300
fax: (209) 234-8420
Internet: www.gallien-krueger.com
Email: info@gallien.com

We wish you a lifetime of good playing and remember to always have fun!

Always Listening

I have never seen the point in doing things the way others have done them. I also have not been very interested in following the latest fad. I am a Stanford educated engineer who worked his way through school as a musician. Like all musicians, I have lugged amplifiers up stairways and into car trunks, always wondering why these things had to be so heavy, bulky, and hard to handle.
As I am the principal innovator at GK, our products reflect my attitudes and life experiences. I don't model my designs after other manufacturer's products (as some of our competitors are proud of reciting). Instead, I believe new and old problems are best solved with new solutions. Having taken our own path, GK products enjoy a unique, unmatched sound, allowing the artist using them every opportunity to make an original statement. Having supported my products for over thirty years, I have learned from the story they tell. Gallien-Krueger is a reflection of that story, and has a commitment to support that legacy. Just as the products I created thirty years ago are still telling their story, the products we create today will be talking to us tomorrow.
We'll be listening,



Robert Gallien

Setup & Maintenance

Setup: To insure proper operation and to avoid potential safety hazards, place the unit on a firm, level surface. Do not plug or unplug the instrument or speaker cable while the amplifier power is on. Rack-mounting this unit is not recommended.

Heat & Ventilation: For proper ventilation, make sure there is at least 8 inches (20cm) of clearance around the sides, top, back and front of the amplifier. Avoid using in extremely hot or cold locations and areas that are exposed to direct sunlight, or near heating equipment. The heat sink fins and ventilation slots that form part of the enclosure are specially designed to displace heat generated by the amplifier. Placing other electronic equipment near these heat-dissipation systems may possibly affect the long-term reliability of both your amplifier and the other equipment.

Moving the Unit: Before moving the unit, be certain to disconnect all cables. Make sure that you disconnect the unit from the AC outlet. If Traveling with the unit frequently, we recommend a road case or gig bag to protect it from scratches and road wear.

Cleaning & Maintenance: Clean only with a dry cloth. Never use benzene, thinner, alcohol, or other volatile cleaning agents. Do not use abrasive cleaners, as they may damage the finish of metal parts. Avoid spraying insecticides near the unit. No other maintenance should be necessary.

Speaker Configurations:

Backline 112:	One 8 Ohm 12" speaker
Backline 110:	One 8 Ohm 10" speaker

To drive an external cabinet, the combo's internal speaker can be disconnected by unplugging the speaker cable connected to the combo's back panel.

Maximum recommended load with the internal speaker disconnected:

Backline 112:	One 8 Ohm cabinet.
Backline 110:	One 8 Ohm cabinet.

Quick Start

The Backline 110/112 is designed to be simple to operate. All controls have a well defined purpose and are well behaved. These directions will take you through the basics and give you a good start for setting up your sound.

1. Set the power switch to Off and connect the supplied power cable from the amplifier AC receptacle to an AC power outlet of proper voltage and power rating (see safety information on page 8 for details).

2. Set all EQ controls and the Boost control to 12 o'clock. The Voicing Filter should be turned all the way down to get a flat response. Set the Gain, Level-A, Level-B and Master Volumes at 0. Set the A/B switch to off (Channel A)

3. Using an instrument cable, connect your bass to the Input jack and turn the power switch on and play. If the clip LED flashes excessively, push the button marked **-10db** in. This will prevent you from overdriving the preamp. Occasional clip light flashes occurring while playing very hard is okay.

4. Set the master control to 12 o'clock and slowly bring the Level-A volume up. Do not turn the volume control in the input section past 12 o'clock unless you want an overdrive effect. If you have a bass with passive electronics make sure the controls are all the way up. If you have a bass with active electronics, turn all of the EQ controls on the bass to the middle or flat position.

At This Point:
You should be hearing your bass quite well. You can use the volume and Master to achieve a comfortable sound level. **Remember:** If you need more volume, turn up the Master control first.

5. Now you are ready to check out the overdrive feature (Channel-B). Push in the Level A/B button. The overdrive LED should light. Set the Gain control to 9 o'clock as a starting point. Slowly raise the Level-B volume to the desired sound level. This will give a slightly distorted sound. Raising the gain will add more distortion and sustain. (See Sound Tips for more detail).

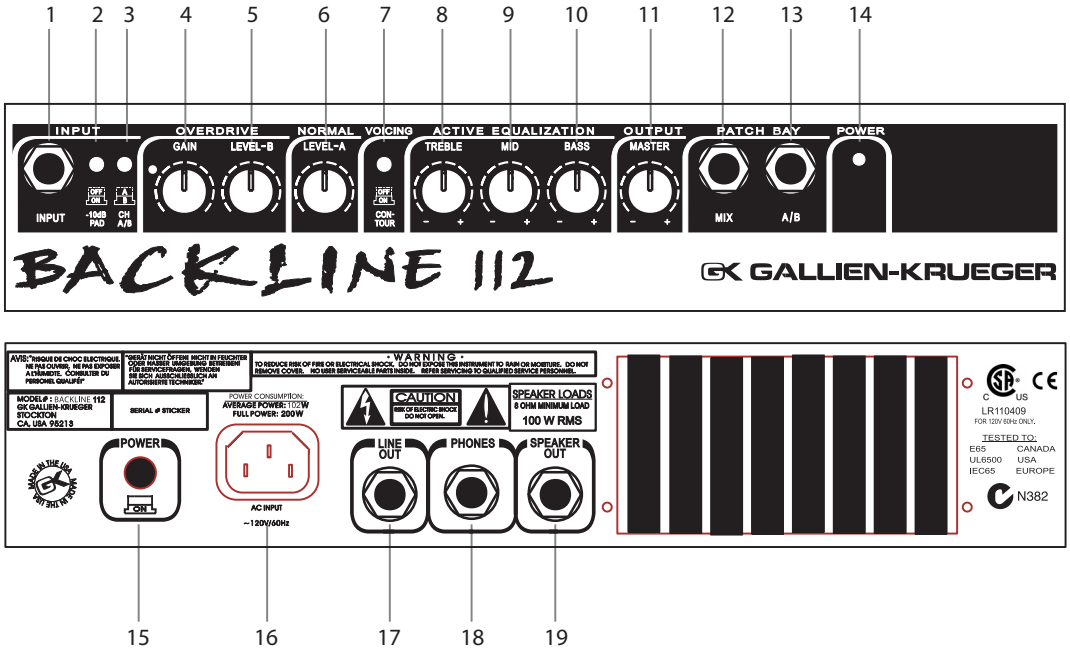

Front Panel Controls

1-Input: A standard ¼" input jack.

2--10dB Pad: Press in for active basses.

3-Channel A/B Switch: Switches between the overdrive channel and the normal channel. Can be activated with an optional footswitch.

4-Gain: Controls the amount of overdrive in the "B" channel. At low settings it provides a smooth distorted sound. At high levels it will provide full saturation with long sustain.

5-Level-B: Adjusts the output level of the Overdrive channel.

6-Level-A: Sets preamp gain after the input stage.

7-Contour: Cuts the mid-range frequencies while boosting lows & highs.

8-Treble: Boost and cut at 7kHz±14dB shelving type. Add or remove edge and definition.

9-Mid: Boost and cut at 250Hz +6dB -10dB, "Q Optimized," band pass type. Works on the main body of your sound.

10-Bass: Boost and cut at 60Hz ±10dB, shelving type. Controls low end punch.

11-Master: Controls output level of the amplifier.

12-Mix: Use to plug in a CD player of a second instrument for teaching.

13-A/B: ¼" Jack for insertion of standard single pole foot switch. It Switches from channel "A" to "B". The "A/B" switch must be out for this function to operate.

14-Power/Protect LED: The LED turns red for five seconds while the amp powers up then turns green when the amp is ready. Should the amp experience a fault (over heat, over current) The amp will mute and this LED will go red until the condition is corrected.

Rear Panel Controls

15-Power Switch: Turns the amplifier on or off.

16-AC Input: Standard IEC receptacle.

17-Line Out: Sends a line level signal for use with a direct box or to a second amplifier.

18-Phones: When using headphones, unplug the speaker cable from the back of the amplifier.

19-Speaker Out: It delivers 70 watts into 8 Ohms. Lower impedances should not be used. Impedances higher than 8 Ohms are acceptable. No damage will result from operating the amplifier with the speakers disconnected.

Sample Settings

The Backline 110/112 is versatile in its sound and tone. Below are a few suggested amp settings that can be used as starting points to define your own sound.

Note: the Gain/Overdrive settings will vary according to the output of your bass.

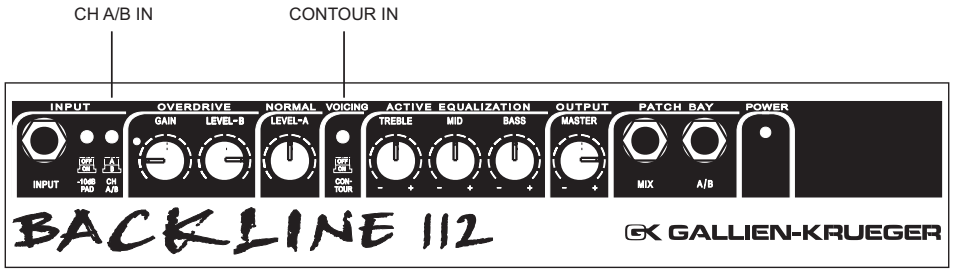

Tube Style Grunge:

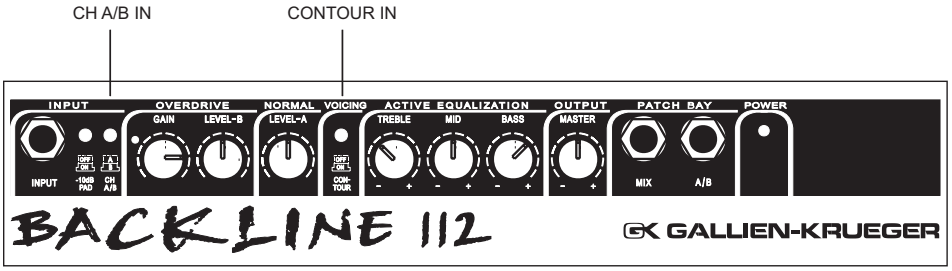

Insane Gain:

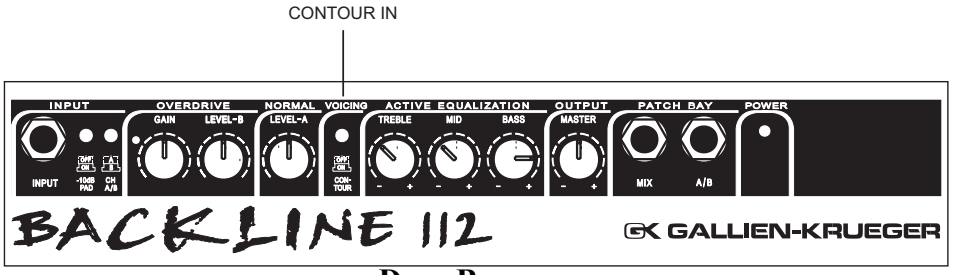

Deep Bass:

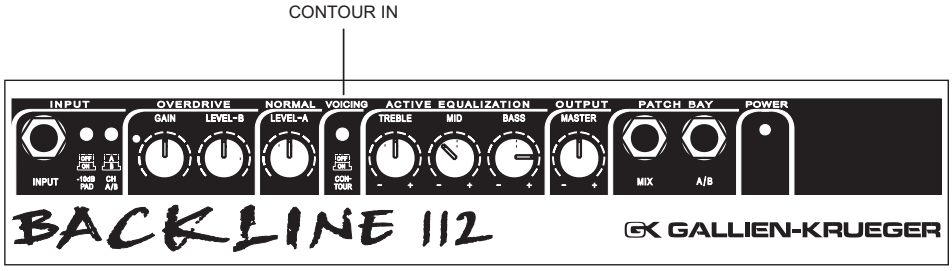

Slap:

Tech Talk

Characteristics of the Backline 110 & 112
The Backline 110/112 is a flexible, user-friendly state-of-the-art bass amplifier designed to deliver maximum performance. This is accomplished through these important features:

- High current power supply and power amp circuitry, for a quick and punchy responce.
- Three band active equalization for precise tone control.
- Mid-Contour Shaping
- Switchable overdrive channel designed specifically for bass.

High Current Capability:
When a power amplifier is pushing a speaker cone and it needs to reproduce a high-power transient like a string slap, the amp must be able to deliver a high current pulse to maintain cone control. If the amplifier can't do this it simply cuts the transient off, producing an unresponsive less out front sound. Creating these high current pulses requires extra power devices (four times the current required to deliver its rated power), larger supply capacitors, and intelligent protection logic. GK is the only bass amp manufacturer that goes to the trouble and expense to make this happen and it is a big reason why GK amplifiers sound louder and cleaner than other brands at the same power rating.

Active Equalization:
Standard tone controls and graphic equalizers give you plenty of variation, but they don't provide what the instrument really needs. In fact, graphic equalizers are intended for room equalization and make poor instrument equalizers. The GK equalizer reflects 30 years of development and refinement and is unique to the industry. Each section is a special circuit optimized to perform a Bass specific job in its operation range. These sections are wired in series so they add to one another without creating unmusical peaks or valleys. The result is an equalizer that is easy to use and sounds natural at any setting.

Contour:
The Contour is based on the same contour circuit as the 800RB. When engaged, it scoops out the mid frequencies while emphasizing the lows and highs.

Overdrive:
The Overdrive channel in your Backline amplifier provides truly distinct distortion and sustain sounds. It is not a simple clipping circuit but utilizes FET's connected in our exclusive G.I.V.E. configuration. This is an added flexibility unheard of in this class of product.

The Valve Effect:
As in all GK amplifiers, the Backline amplifier incorporates what we call the Valve Effect, or G.I.V.E(Gate Induced Valve Effect). We use field effect devices with the gate biased in such a way that emphasizes the optimum harmonic content of the signal. Working in concert with our unique Four Band Active Equalizer, and three stage Voicing Filter Section, the Valve Effect produces a consistently pleasing bass tone.

Intelligent Protection Circuitry:
The Backline Series' protection circuitry constantly monitors for unsafe operating conditions such as short circuits, miswired speaker cables, blown speakers, improper ventilation and incorrect speaker configurations. In addition, protection is provided during power up/power down. If the Backline unit senses any unsafe operating conditions, the output signal is immediately muted and the power light changes from Green to Red. The amplifier will remain muted until the fault is removed. If the protection circuit activates while playing, turn the amplifier off and check the amplifier speaker output connections. Be sure that you are not exceeding the maximum recommend load described in this manual. If the problem persists, contact GK directly for technical advice.

Enjoy:
You should now have a thorough understanding of how your new Backline amplifier works and what advantages it can offer you in getting "your" sound. We thank you for reading the Owner's Manual and wish you the best of times! Please send us your comments via www.gallien-krueger.com or email us at sales@gallien.com.

Block Diagram: Backline 112 & 110

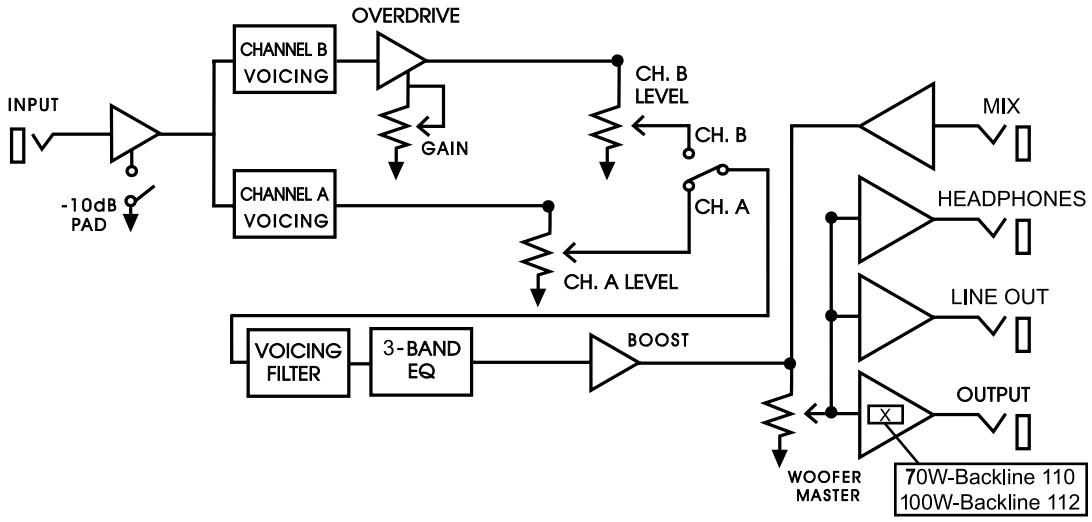

Backline 112 & 110 Specifications:

Output Power:

110:	70W @ 8 Ohms
112:	100W @ 8 Ohms

Input Section:

Max. Input Level	0.6V Rms
With -10dB pad	1.6V Rms
Input Impedance	1M Ohm

Equalizer:

Bass	±10db @ 60Hz
Mid	+6db/-10dB @ 250Hz
Treble	±14db @ 7kHz
Contour	+2db@50Hz/ -10db@500Hz/ +3db@7kHz

Noise: >-90db "A" weighted.

Protection: Full short circuit, thermal,& RF protection. Stable into reactive and mismatched loads Five second muted warm-up.

Power Requirements:

U.S.A./Canada	120V/60Hz
112:	200W (full), 102W (average)
110:	98W (full), 69W (average)
Europe	230V/50Hz
112:	200W (full), 102W (average)
110:	98W (full), 69W (average)
Japan	100V/50Hz
112:	200W (full), 102W (average)
110:	98W (full), 69W (average)

Dimensions(HxWxD):

Backline 110:	12.9"W x 15.9"H x 13.65"D
Backline 112:	14.9"W x 18.3"H x 15.35"D

Weight:

Backline 110:	30lbs
Backline 112:	40lbs

GK GALLIEN-KRUEGER

Backline Series Owner's Manual
Part # 160-0180-B1