Operating Instructions

Backline100 Guitar Amplifier

GK GALLIEN-KRUEGER

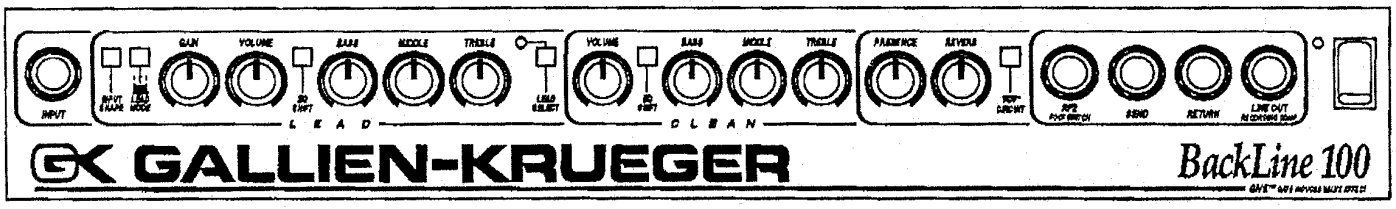

Operating Instructions 800RB

A WORD ABOUT OUR NEW AMPLIFIER

Over 20 years ago, Bob Gallien's first product, the 226A Guitar Amplifier was on the backline at Woodstock. It was the beginning of a long line of top quality guitar amplifiers whose reputation still holds strong today. Following in that tradition, the BackLine 100 combines time-honored features such as 3-spring reverb and passive equalization with Gallien-Krueger developments like GIVE™ technology, channel switching, and VCV™ recording compensation, to achieve a perfect blend of vintage and modern technologies.

GIVE™ (Gate Induced Valve Effect) is the culmination of Bob Gallien's twenty-five year pursuit - to optimize the superior qualities inherent in field effect devices for audio applications. Beginning in the '60s, while still an engineering student at Stanford, Bob began using field effect devices in the critical signal path areas of his amplifier designs. Each design since then has yielded new discoveries and improvements in the sound. The BackLine 100 has been developed around the latest and most comprehensive use of what we now call GIVE TECHNOLOGY. This design provides the smooth overdrive and even harmonic distortion characteristics common to vintage tube amplification without the hassles and expense of tube failures. The result is a punchy, warm clean sound, and a hot, out-front lead sound that gets the most out of your playing.

Integrated with GIVE™ are a host of intelligent features developed by Gallien-Krueger engineers that make the BackLine an ideal amp for the nineties. Input Shape, separate equalizers (with shift) for each channel, presence, and VCV™ filtering combine to make the BackLine a sound monster. Add three channel operation, through the Lead 1/Lead 2 feature, and you get an amp that gives you anything you want, from clean, to crunch, to lead, and it will do it with virtually any guitar, and any speaker system.

VCV™ (Vintage Cabinet Voicing) has been a part of Gallien-Krueger amps for over ten years. Originally it was designed to make the 250ML sound big, even through its dual 6" speakers. Now it is a selectable feature on the BackLine 100. So whether you are recording, using headphones, using a small speaker or a stack, you will always have that big sound.

Twenty-five years of continuous improvement are also apparent in the BackLine 100 power amp. Bob has perfected a constant current amplifier that interacts with the speaker to produce the low end "thump" and high end brilliance needed to put your guitar sound out front. In addition, the new power amp will integrate the output current to zero in the event of an output short. When the short is removed, the amp is ready to go again. You don't have to worry about an accidental short blowing your gig.

The dictionary defines Paragon as a model of perfection. That is the only fitting description for the speaker Gallien-Krueger designed for the BackLine 100. The 100 watt Paragon 12" guitar speaker will keep its cool when you push it, and deliver a sound with all the warmth and tone you expect from Gallien-Krueger. The exceptional Paragon speaker is also available in a full line of speaker cabinets from Gallien-Krueger.

We are proud of the BackLine 100 and feel it has passed its final test with your purchase. This manual is intended to familiarize you with the operation and features of your new amplifier. If used properly, it should give you years of musical enjoyment and trouble-free service.

CAUTIONS

- TO PREVENT ELECTRICAL SHOCK OR FIRE HAZARD, DO NOT EXPOSE THESE UNITS TO RAIN, MOISTURE OR EXCESSIVE HEAT.
- IF SERVICE ON YOUR AMPLIFIER IS NECESSARY, PLEASE REFER TO A GK AUTHORIZED SERVICE CENTER. DO NOT ATTEMPT TO REMOVE PROTECTIVE COVERS FROM THE AMPLIFIER OR SERVICE THE AMP YOUR SELF. LETHAL CONDITIONS EXIST INSIDE!
- FOR OPTIMUM PERFORMANCE OF YOUR NEW AMPLIFIER, PLEASE READ AND FOLLOW INSTRUCTIONS IN THIS MANUAL CAREFULLY.

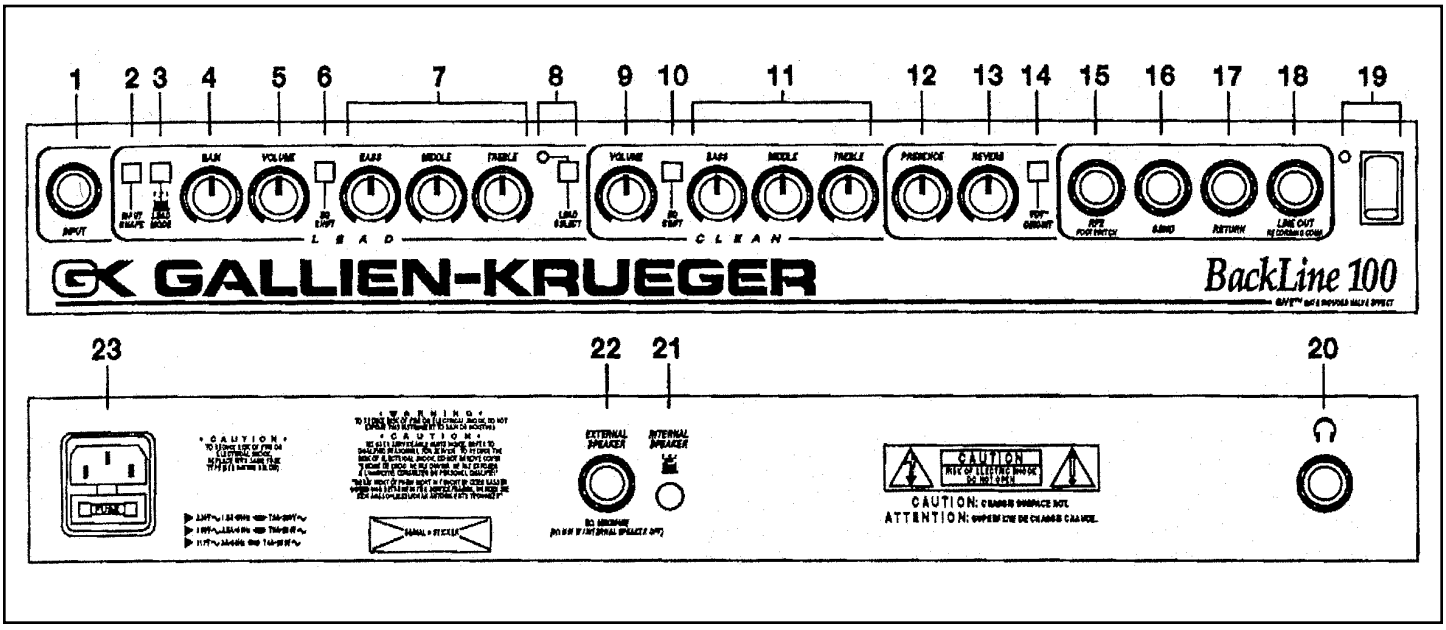

Front Panel Features

1. INPUT JACK
Accepts a standard 1/4" phone plug and a signal level up to +4 dBV.

2. INPUT SHAPE
A "pre-distortion" filter which, in the "out" position, rolls off the very low frequencies to prevent muddy sounding distortion at high gain levels. When "in" it boosts the bass for a better low gain sound.

3. LEAD MODE (1-2)
Lead 1 (out) provides lower gain for a blues sound or crunch rhythm, while Lead 2 (in) is for high gain overdrive and lead soloing.

4. GAIN
Used in conjunction with Lead Model it can vary the sound from a slight overdrive to high gain saturation with fuller harmonics and increased sustain.

5. VOLUME
Sets the overall Lead Channel volume coming out of the speaker(s) or headphones.

6. EQ SHIFT
Shifts the operating frequencies of the equalizer section to provide a boost in the high-midrange.

7. THREE-BAND PASSIVE EQUALIZER
Located after the distortion stages for maximum effect, it provides tone control over 3 frequency ranges - low, middle, and high - specifically suited for an overdriven guitar tone.

8. LEAD SELECT SWITCH & LED
Pushing this switch in will light the LED to indicate that the amp is in the Lead Mode.

9. VOLUME
Sets the overall Clean Channel volume level at the output. Use in conjunction with the Lead Volume to balance the level of each channel for channel switching.

10. EQ SHIFT
Shifts the operating frequencies of the equalizer in this case, it provides more bass for a mellower sound.

11. THREE-BAND PASSIVE EQUALIZER
Provides tone control over three frequency ranges specifically suited for a clean guitar tone.

12. PRESENCE
Affects the very high frequency range controlling the "edge" of a lead tone and the brightness of a clean sound.

13. REVERB
Controls the amount of signal coming from the built- in 3-Spring Reverb that is to be mixed with the dry signal.

14. VCV™ CIRCUIT SWITCH
The VCV™ (vintage Cabinet Voicing) filter provides a bass boost, a high-mid peak, and a high frequency roll-off that simulates a speaker being miked and is very useful in recording direct to tape. This switch allows that same filter to be switched in for use in the speaker and the headphones.

15. RF2 FOOTSWITCH JACK
This jack accepts a 1/4" stereo plug for connection to the RF2 footswitch which allows remote switching between Clean and Lead channels and Lead 1/Lead 2 when Lead Channel is selected.
NOTE : LEAD MODE and LEAD SELECT should be pushed in for RF2 operation.

16&17 EFFECTS LOOP
Provides a means of adding in-line effects (see Sample Hook-ups). The Send can also be used as a preamp output with no recording compensation.

18. LINE OUT (RECORDING COMPENSATED)
Provides a line-level signal with VCV™ filtering useful for going direct to a PA mixer or studio recorder.

19. POWER SWITCH & LED
Turns unit on (1) and off (0). LED turns on to indicate power is on. Unplug unit if not being used for extended periods.

Rear Panel Feature

20. HEADPHONE JACK
Brings the power amp signal to a level that allows standard headphones to be driven. The VCV™ is recommended for headphone operation.

21. INTERNAL SPEAKER SWITCH
Allows internal speaker to be turned off (in "out" position) for use with headphones or silent direct recording or if the unit is used for driving a larger 4 ohm cabinet such as a 4x12".
Note : No damage will result from operating the amplifier with the speaker disconnected.

22. EXTERNAL SPEAKER JACK
Allows external speakers to be driven by the internal power amp. For optimum performance and to avoid damaging the amplifier, use the following minimum external speaker impedance:
INTERNAL SPEAKER "ON" : 8 ohm minimum total external impedance.
INTERNAL SPEAKER "OFF" : 4 ohm minimum total external impedance.

23. AC RECEPTACLE & FUSE HOLDER
This combination grounded AC jack and fuse holder accepts a detachable power cord. If a replacement is needed, it should be UL rated at 10 amps/125VAC or 5 amps/240VAC.
Never operate this amplifier with any other than the recommended fuse type : 5mm x 20mm, slow blow, 250V with ampere ratings as follows:

Line Voltage	Fuse Rating	Fuse #
100 VAC	5 Amps	T5A-250V
117 VAC	4 Amps	T4A-250V
230 VAC	2 Amps	T2A-250V

To replace fuse, simply slide out the fuse holder using a screwdriver, as shown on the left. A spare fuse is located in a sliding compartment directly behind the embossed fuse symbol.

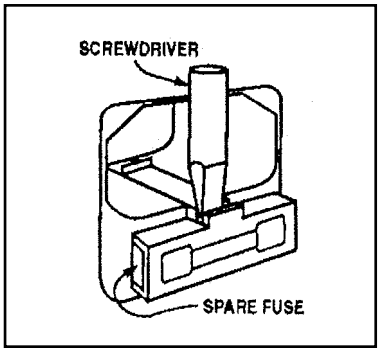

Getting Started

1. Plug your guitar into the input jack and make sure all of its volumes and tone controls are set to "10". You can fine tune them later.

2. On the BackLine 100 - Start with the tone controls and Presence control in the center position (12 o'clock), all other controls on "0", and all switches out.

3. Gradually turn up the "Clean Volume" control, while playing, and set to desired level.

4. Experiment with the EQ Shift and tone controls for your desired clean sound. Then add Presence, Reverb, or the VCV™ filter to suit your tastes.

5. Switch to the Lead Channel by engaging the Lead Select switch.

6. This time, turn up the "Lead Volume" slightly and then increase the Gain until you have found a suitable gain level (you may want to experiment with the Lead 1/Lead 2 switch and the Input Shape at this time, as well). Then continue to set the Volume for a proper output level.

7. Again, follow the steps from 4 to fine-tune your sound. There are many settings to experiment with here, and you should try as many possibilities as you can because you will probably find a number of them that are very pleasing.

8. To help familiarized yourself with the BackLine100's controls, you may want to use the selected settings (shown on the right) as a starting point. Please take note that these settings are designed for specific guitar body types as well as pickup configurations. Enjoy.

Selected Settings

(On Right)
• Controls shown in black are active or in the "in" position.
• Volume settings will be somewhat dependant on speaker configurations, desired volume level, and outboard effects.
• Settings are intended for the BackLine 100 Combo as well as the BackLine 100 Head.

Start is a registered trademark of Fender, Les Paul is a registered trademark of Gibson.

FULL BODIED CLEAN • Strat, Middle Pickup

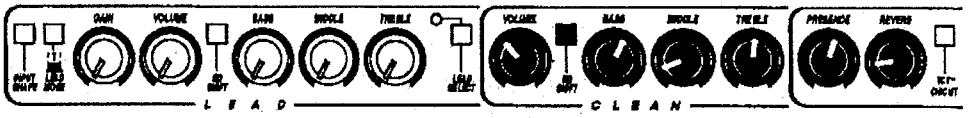

BRIGHT CLEAN • Strat, Bridge & Middle Pickups

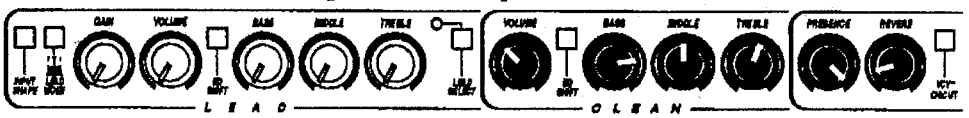

MELLOW CLEAN • Les Paul, Bridge & Neck Pickups

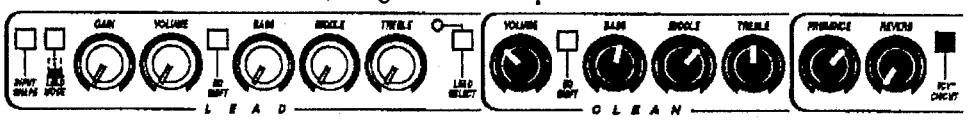

PUNCHY BLUES • Strat, Bridge & Middle Pickups

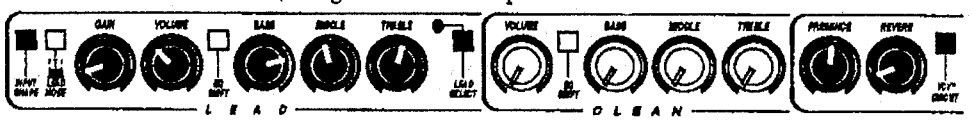

CRUNCH RHYTHM *(switch to Lead 2 Mode for leads)* • Les Paul, Bridge Pickup



METAL OVERDRIVE • Les Paul, Bridge Pickup



DRIVING LEAD • Strat, Bridge Pickup

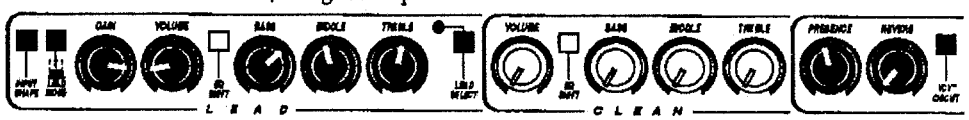

DARK "GRUNGE" TONE • Les Paul, Bridge Pickup

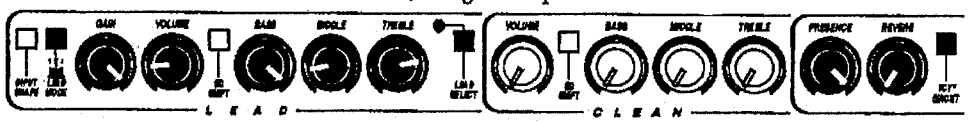

SAMPLE HOOKUPS

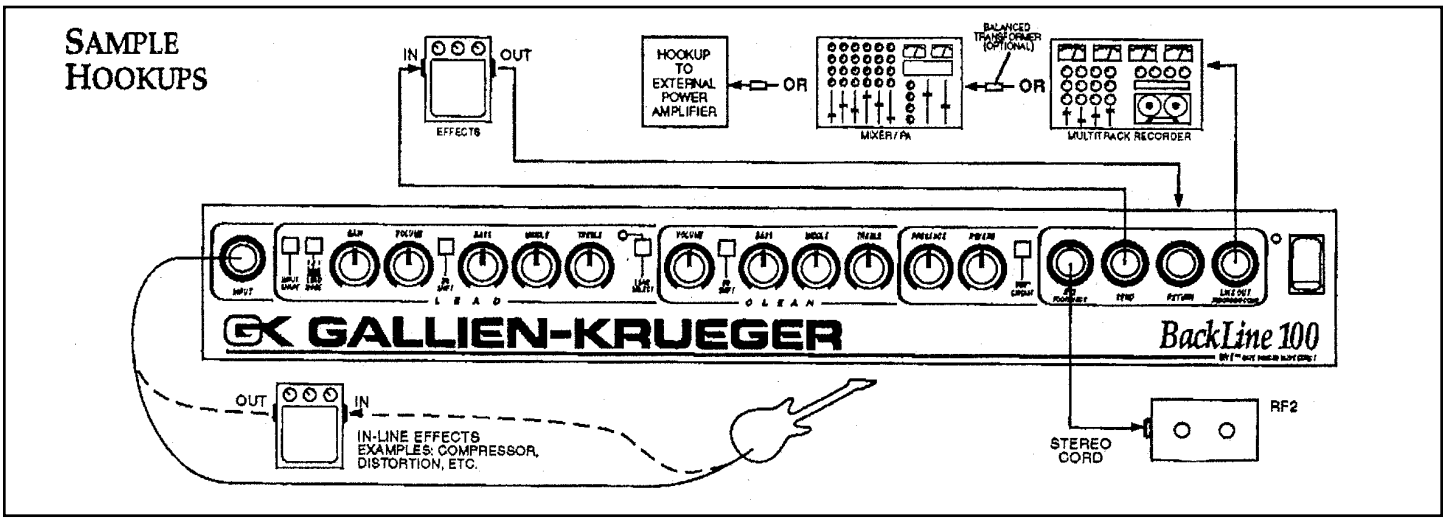

Suggested G-K Systems

Putting together the right system is as important to your final sound as choosing the right amplifier or the right guitar. Here are our favorite systems, each designed to optimize the power and versatility of the BackLine 100 Combo and Head. For the ultimate system, use GK cabinets, the only cabs specifically designed for GK electronics.

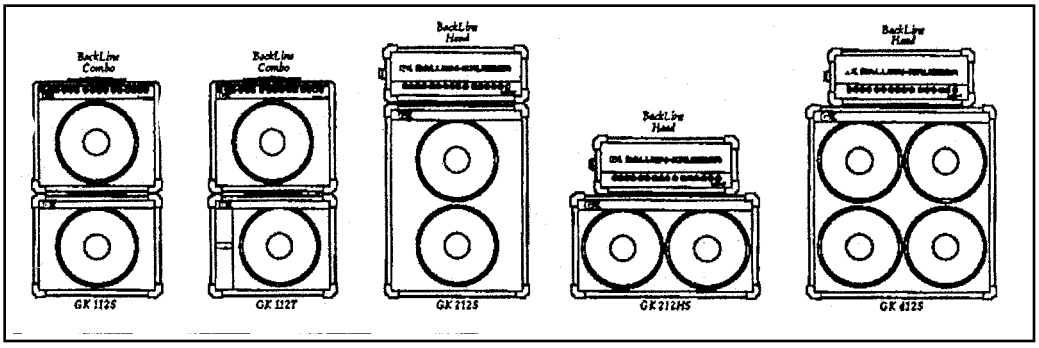

Backline 100 Block Diagram

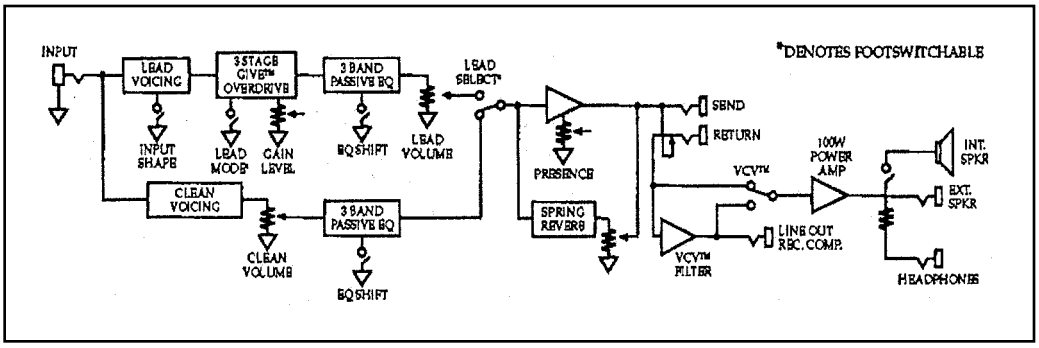

Specifications

Max input : 1.4Vrms
Output : 70W into 8Ω
100W into 4Ω (@ less than 5% THD)
Signal - to - Noise Ratio : (Clean Channel) 35mVrms @ 1KHz
(Lead Channel) .4mVrms @ 1Khz
Return Sensitivity : .58Vrms @ 1KHz
Clean Equalization : Mid : +4, -5dB @ 400Hz
w/Shift : +3, -6dB @ 700Hz
Treble : +6, -12dB @ 2KHz
Bass : +4, -10dB @ 80Hz

Lead Equalization : Mid : +4, -8dB @ 800Hz
w/Shift : +3, -5dB @ 500Hz
Treble : +5, -6dB @ 4KHz
Bass : +2, -3dB @ 80Hz
Presence : +2, -3dB @ 4KHz
Input Impedance : Input ……1 MΩ
Return ……100KΩ
Output Impedance : Send ……3 KΩ
Line Out (Recording Compensated) ……..1KW
Reverb : 3 - Spring Accutronics
Dimensions : 112 Combo : 19" W x 17"H x 12"D (42lbs.)
Head : 21"W x 9"H x 9.7"D
Footswitch : GK RF2 and standard 3-connector stereo cord (1/4" plugs)

Troubleshooting

Your new amp, if handled with care, should give you trouble-free performance. If operated according to instructions in this manual, your only maintenance should be occasional external cleaning.

Often when an electrical component provides poor, erratic, or no performance, it is due to minor problems or irregularities which may be corrected easily by someone knowing very little about electronics.

We have provided the accompanying chart for your reference. If you have any problems at all, please check this list first. If your problem is major and there is definitely something wrong with the unit, please refer to the list of GK Authorized Service Centers included with the paperwork in the packing box. If necessary, call your local GK Dealer to locate you nearest GK Authorized Service Center. You may also call our Service Department at (408) 441-7970, ext.38 for reference to your nearest GK Authorized Service Center.

PROBLEMS:	**PROBABLE CAUSES/SOLUTIONS**:
LEDs light but no signal from Speaker Outputs, Headphones, or Line Outputs:	Be sure all tone controls and volumes are turned up at least part way.
LEDs light, tone and volumes turned up but no sound.	Check Interconnections with speakers.
LEDs light, tone and volumes up, speakers and connections OK, but no signal from output.	Check guitar volume, pick-ups, cord, and repair or replace if necessary.
Channel Switching or Lead Mode Select not functioning with footswitch plugged in and appropriate LED indicators "on".	Be sure front panel On/Off buttons are "in", Check footswitch cable.
Loud hum.	Check grounding of the unit and any effects going through the effects loop. Proper grounding is mandatory. Repair or replace guitar cord. Make sure external effects are patched into the Send and Return and not before the Input. Test guitar pick-ups.
Excessive noise.	Turn off power switch and allow unit to cool off. Turn on power again. If is comes on, make sure speaker load is no less than 4 ohms or that unit is not affected by another heat source (stage lighting, direct sunlight, etc.)
After playing for some time, the unit becomes hot to touch and shuts off 0 no LEDs lit or signal coming out.	Check power cord, AC outlet and fuse. If all are OK or fuse is blown, call your local GK Authorized Service Center. Note : Be sure the correct fuse is being used.
Amp is not hot to touch and still no power no LEDs lit or signal coming out.	

GALLIEN-KRUEGER • 2240 PARAGON DR. • SAN JOSE, CA 95131
US: (408) 441-7970 • FAX (408) 441-8085
EUROPE: 41.42.234520 • FAX: 41.42.239525