700RB Series

Owner's Manual

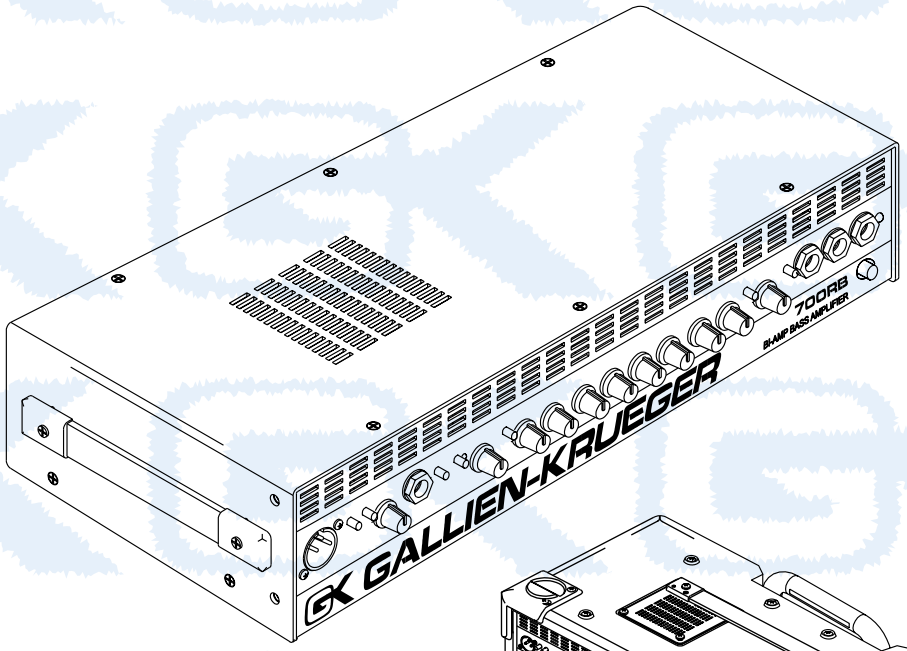

700RB

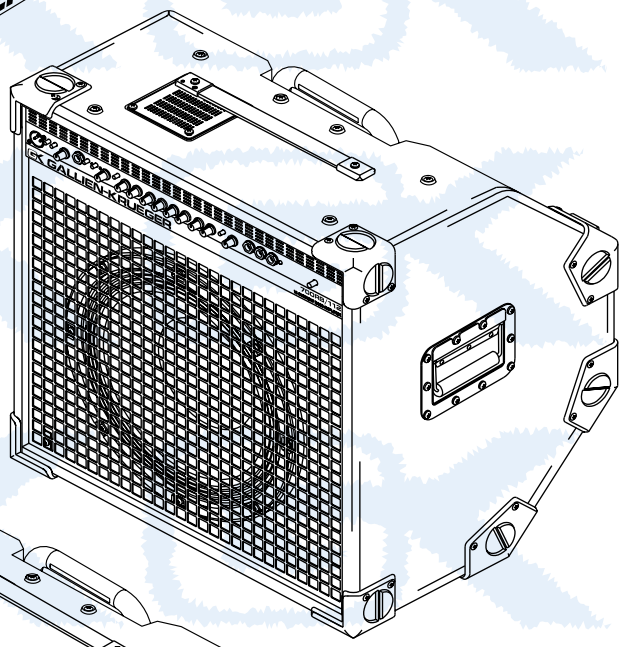

700RB/112

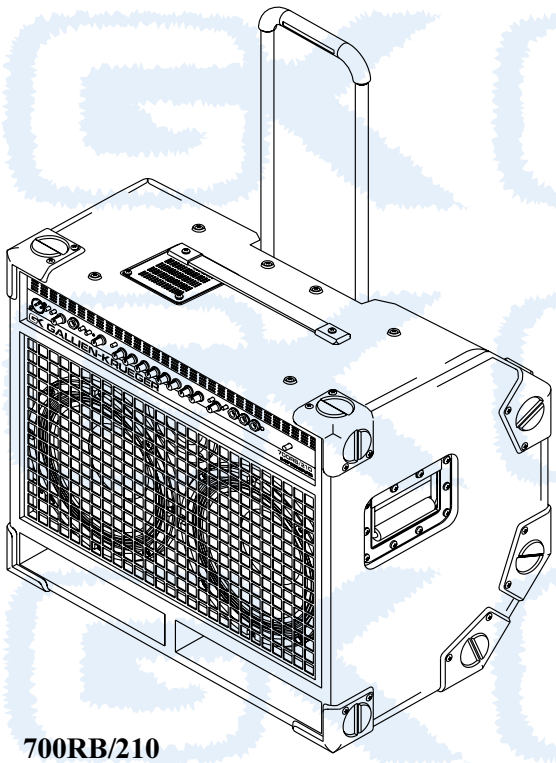

700RB/210

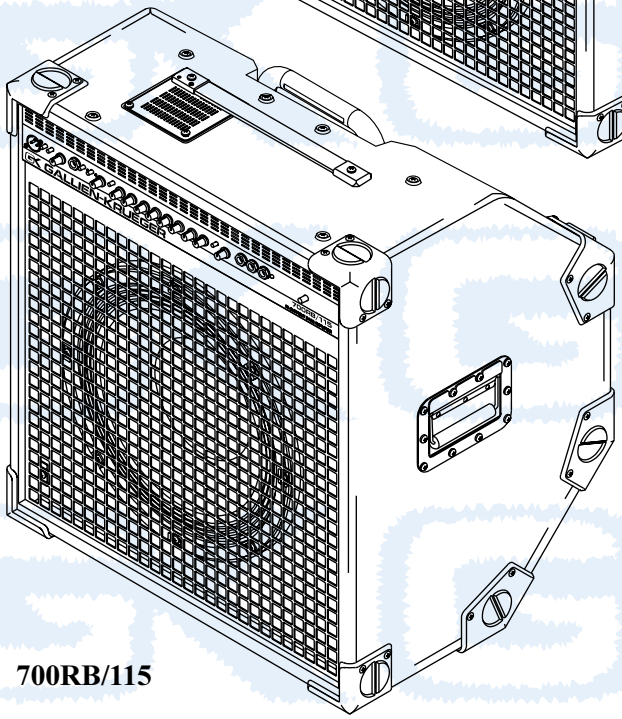

700RB/115

GK GALLIEN-KRUEGER

Table Of Contents

Introduction.....3
Quick Start.....5
Sound Tips.....6
Bi-Amp and Normal Operation..... 7
Safety Information.....8
Installation and Maintenance.....9
Front Panel Controls.....10
Rear Panel Controls.....11
700RB Series Combos.....12
Tech Talk.....13
Specifications.....16

**All Features and specifications are subject to change without notice*
***This list is subject to change without notice.*

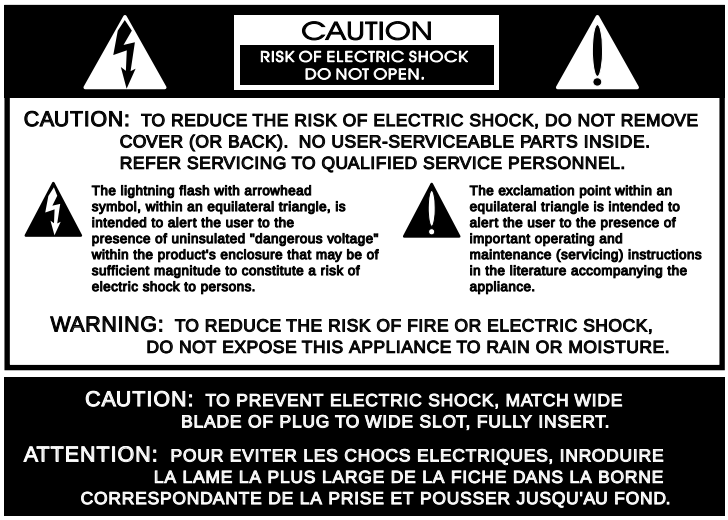

Gallien-Krueger
2240 Paragon Dr.
San Jose, CA, 95131
phone: 408-441-7970
fax: 408-441-8085
www.gallien-krueger.com

Congratulations

Your purchase of a new Gallien-Krueger 700RB Series product is surely the result of much careful consideration on your part. For our part, we at Gallien-Krueger are pleased that you chose us, and are determined that you will be a satisfied customer. In choosing a 700RB Series product, you own an amplifier with many unique features, that can take you where you have never been before.

To get the most out of your new purchase please take a few minutes to read through this manual. If you are in a hurry, we suggest you at least read through the Quick Start section before setting up your new rig. This will help get you started and give you a few quick tips, but is not a substitute for reading the rest of the manual.

Your amplifier should have come with the following items, please check the contents of the box to ensure that you have everything.

Included with your 700RB Head:	
700RB	1
Rack mount Ears with Hardware	2
RBH Amplifier Clip	2
Power Cord	1
4 Conductor Speakon Cable	1
Owner's Manual	1
Warranty Card	1
Safety Instructions Sheet	1

Included with your 700RB Combo:	
700RB/112 (/115, or /210)	1
Power Cord	1
Owner's Manual	1
Warranty Card	1
Safety Instructions Sheet	1

If your 700RB Series amplifier or combo did not come with all the items listed above, or if you encounter problems while setting up your new equipment, please contact your local dealer, or us as soon as possible at:

Gallien-Kruger, Inc.
2240 Paragon Drive
San Jose, CA 95131
phone: (408) 441-7970
fax: (408) 441-8085
Internet: www.gallien-krueger.com
Email: sales@gallien.com

We wish you a lifetime of good playing and remember to always have fun!

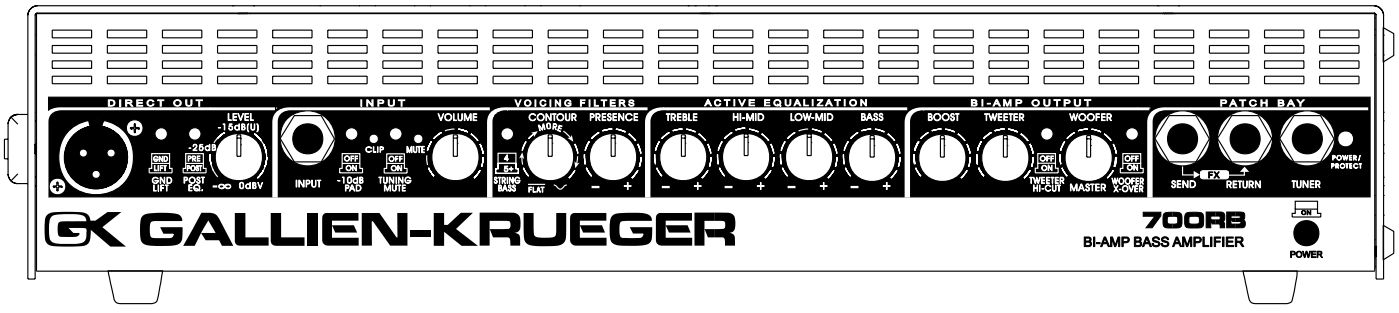

Always Listening

I have never seen the point in doing things the way others have done them. I also have not been very interested in following the latest fad. I am a Stanford educated engineer who worked his way through school as a musician. Like all musicians, I have lugged amplifiers up stairways and into car trunks, always wondering why these things had to be so heavy, bulky, and hard to handle.

As I am the principal innovator at GK, our products reflect my attitudes and life experiences. I don't model my designs after other manufacturer's products (as some of our competitors are proud of reciting). Instead, I believe new and old problems are best solved with new solutions. Having taken our own path, GK products enjoy a unique, unmatched sound, allowing the artist using them every opportunity to make an original statement.

Having supported my products for over thirty years, I have learned from the story they tell. Gallien-Krueger is a reflection of that story, and has a commitment to support that legacy. Just as the products I created thirty years ago are still telling their story, the products we create today will be talking to us tomorrow.

We'll be listening,



Robert Gallien

Quick Start

The 700RB Series is designed to be simple to operate. All controls have a well defined purpose and are well behaved. These directions will take you through the basics and give you a good start for setting up your sound.

First:
Set the power switch to Off and connect the supplied power cable, from the amplifier AC receptacle, to an AC power outlet of proper voltage and power rating (see safety information on page 7 for details).

Next:
Connect your speaker cabinets to the amplifier outputs marked 380W AMP ONLY or "SPEAKON" OUTPUTS. Be sure not to exceed the recommended speaker load below.

Maximum Recommended Speaker Load:
One 4 Ohm, or two 8 Ohm cabinets on the 380W Amp. One or two 8 Ohm horns on the 50W Amp.

If you are using an RBH Series cabinet, use the supplied 4 conductor Speakon cable to connect to the "Speakon" outputs on the rear panel of the amplifier. Set the Woofer X-Over and Tweeter Hi Cut switches on the front panel to the IN position. In addition, set the switch on the RBH cabinet to Bi-Amp.

For connection to all other cabinets, connect to the 1/4" outputs labeled 380W amp only. Set the Woofer X-Over switch on the front panel to the Out position.

For more information on Bi-Amp and Normal Operation, see page 7.

Caution:
Do not connect the Speakon cable labeled "Bridge Mode" to the 700RB. This may result in damage to the amplifier.

Then:
Set all EQ controls and the Boost control to 12 o'clock. The Voicing Filters should be turned all the way down to get a flat response. Set the Volume and Master Volumes at 0. If you have a five string bass, push the button marked String Bass in.

Next:
Using an instrument cable, connect your bass to the Input jack and turn the power switch on and play. If the input clipping LED flashes, push the button marked -10db in. This will prevent you from overdriving the preamp.

Now:
Set the volume control to 12 o'clock and slowly bring the Master volume up. Do not turn the Volume control in the input section past 12 o'clock unless you want an overdrive effect. If you have a bass with passive electronics make sure the controls are all the way up. If you have a bass with active electronics, turn all of the EQ controls on the bass to the middle or flat position.

At This Point:
You should be hearing your bass quite well. You can use the Volume and Woofer-Master to achieve a comfortable sound level. Remember: If you need more volume, turn up the Woofer-Master control first.

Sound Tips

The 700RB Series has several unique features which, if used properly, will obtain that sound you have been searching for.

The Equalizer:

The Equalizer is used to fine tune your sound. When adjusting it, do it just a little at a time. These are active circuits, and small changes can make a big difference in your sound. With a little experimentation you will find that this equalizer is very easy to use, never sounds weird and provides you with a large variety of great sounds, unique to GK.

Contour:

Increasing the Contour level will scoop out mid-range frequencies while boosting the highs and lows. The sound, once again, is unique to GK and unavailable on any other Bass amp.

String Bass:

The way a Bass amp deals with the instrument low string is a critical part of its sound. In fact, a five string instrument requires an entirely different low end response than a four string instrument. No equalizer can make the necessary adjustments to accommodate both. However, the String Bass button on the 700RB Series does just that. When it is out, the 700RB is voiced like the 800RB (the world's classic four string amp). Push it in and the 700RB is voiced for five string instruments. For some playing styles you may want it in, even with a four string instrument.

Boost/Master:

Turning up the Boost control, will add a little growl to your tone. This is an unmistakable GK trade mark sound, that you will grow to appreciate. Raising the Boost while lowering the Master will add more growl while keeping the sound level the same. Growl is actually a small amount of even order harmonic distortion, that sounds great through a woofer, but horrible through a horn (see Bi-Amp solution below). For most playing situations, the Master is set between 12 & 3 o'clock. The cleanest sound is obtained by setting the Master above 12 o'clock, and going above 3 o'clock for maximum power situations.

Direct Out:

The 700RB provides a low noise, high quality balanced direct out for connection to PA and recording consoles. With the Pre/Post EQ switch set to "Pre" (Out), the direct output signal is fed directly from our low noise, high headroom, FET input stage providing a low noise output superior to external direct boxes and impedance transformers. In addition, this output is calibrated for 1.0V (0 dBV) output and can be adjusted to unity gain (instrument level) by adjusting the Level control to -15 dB (U) . With the switch in the Pre position, the Direct Output signal is only effected by the Level, -10dB Pad, and Tuning Mute controls. This allows you to adjust your tone and volume on stage without changing the Direct Output signal level and confusing your sound man.

Changing the Pre/Post EQ switch to "Post" (In), sends the "GK sound" and preamp response to the Direct Out jack. This gives you complete control over the Direct Out's tone and volume. In addition, a Ground (Gnd) Lift switch is included to remove hum and buzz when connecting to equipment powered by a different ground system.

Bi-Amp and Normal Operation

The 700RB's unique design allows for easy setup into Bi-Amp or Normal configurations. The operational mode is configured by how you connect your speaker cabinets. In addition, you have the option of driving one cabinet in Bi-Amp and one with Normal operation.

700RB setup up for Bi-Amp Operation:

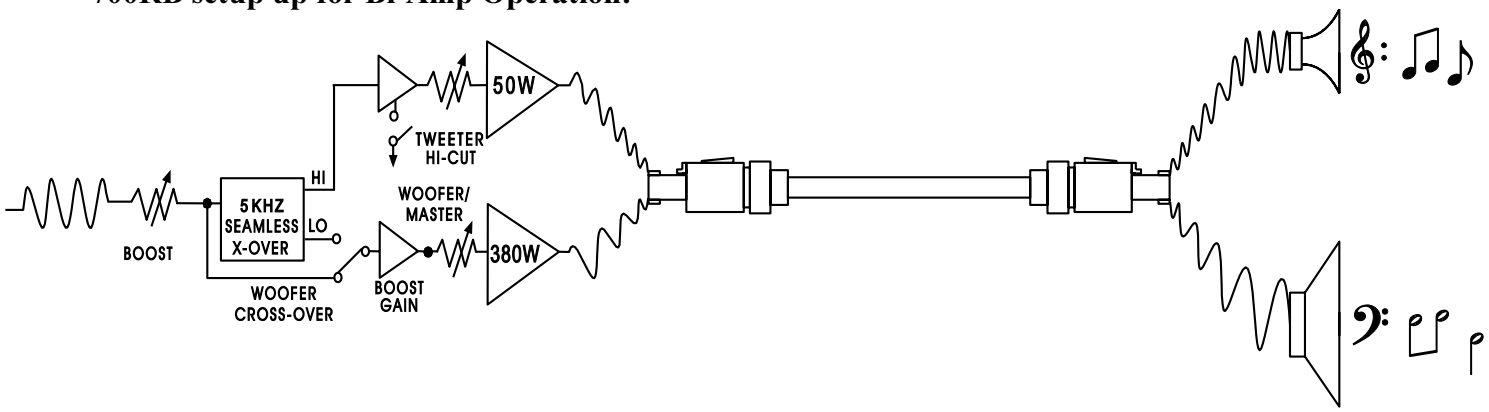

700RB setup up for Normal Operation:

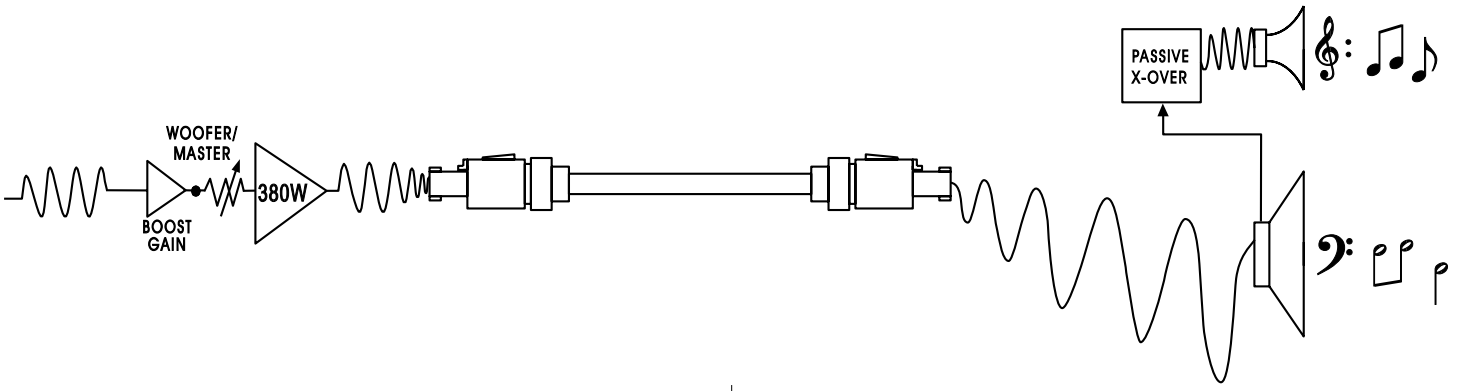

700RB setup up for Bi-Amp Operation:

The Bi-Amp feature of the 700RB series is automatically engaged when you connect an RBH series cabinet (with switch on the cabinet set to Bi-Amp) to the 700RB with the supplied 4 conductor Speakon cable. This setup gives the 700RB complete control of the tweeter and woofer signals sent to your rig. Now you can push the woofers to the max., while the tweeter remains clean, crisp and free of clipping distortion. In addition, a smooth tight tone is easily dialed in by adjusting the Tweeter and Woofer Master controls on the 700RB front panel. Note: In the Bi-Amp configuration, we recommend starting with the Woofer X-Over and Tweeter Hi-Cut controls in.

GK Speakon Cable	GK RBH Series Cabinet
1+ 380W Amp + 1- 380W Amp - 2+ 380W Amp + 2- 380W Amp -	410RBH, 210RBH, 115RBH Set to Bi-Amp mode.

700RB setup up for Normal Operation:

The 700RB series amplifier is configured for normal operation when you are connecting to any cabinet with a 2 conductor Speakon cable, 1/4" to 1/4" speaker cable or 1/4" to banana plug speaker cable. In this setup, the speaker cabinet is driven by the 380W amp and the 50W tweeter amplifier is not used. If you are using RBH series cabinets, the volume of the tweeter (relative to the woofer's volume) can be adjusted using the Horn Level control of the cabinet's internal crossover.

GK Speakon Cable	GK RBH Series Cabinet
1+ 380W Amp + 1- 380W Amp -	410RBH, 210RBH, 115RBH Set to Full Range mode.
¼" Speaker Cable Tip 380W Amp + Shield 380W Amp -	Any brand name cabinet with appropriate impedance and power rating.

Safety Information

Verify Line, Voltage and Amperage Before Use:

Your new 700RB Series Bass Amp has been factory configured for use with:

- 120 Volt/60Hz 20 Amp circuit for USA & Canada.
- 230 Volt/50Hz 10 Amp circuit for Europe & Australia.
- 100 Volt/50Hz 20 Amp circuit for Japan.
- Proper AC circuit for all other countries.

Connecting the amplifier to a line with specifications other than indicated above can create a safety and fire hazard, and may damage the amplifier. If you have any questions about the voltage requirements for your specific model, or about the line voltage in your area, contact your dealer before plugging the unit into a wall outlet.

Verify AC Circuit Capacity Before Use:

The high power output of your amplifier may require heavy current draw under Full-Load conditions. To insure proper performance and avoid potential safety hazards, we recommend connection to line circuits with Amperage specified "as above". Connecting multiple amplifiers to the same circuit, or connecting the amplifier to the same circuit used by other heavy-power devices, such as high-wattage lights, may cause circuit breakers to trip. It is always a good idea to avoid using any audio equipment on the same AC circuit as equipment with motors, such as air conditioners or refrigerators. This will lessen to possibility of power variation and electrical start-up noise affecting your sound.

Do Not Use Extension Cords:

To avoid safety hazards, use only the power cord supplied with your unit. If a replacement cord is used, make certain that it is of consistent quality and gauge as the original. We do not recommend using extension cords with this product. As with all electrical devices, do not run power cords under rugs or carpets or place heavy objects on them. Damaged power cords should be replaced immediately with cords meeting factory specifications.

Handle The AC Power Cord Gently:

When disconnecting the power cord from an AC outlet, always pull the plug, never pull the cord. If you do not intend to use the amplifier for a considerable length of time, disconnect the plug from the AC outlet.

Do Not Open The Amplifier Enclosure:

There are no user-serviceable components inside this product. Opening the amplifier enclosure may present a shock hazard, and modification to the product will void your warranty. If liquid enters the unit, or any metal object such as a paper clip, wire, or staple accidentally falls inside the enclosure, disconnect the unit from the AC power source immediately and consult an authorized service station.

Unpacking:

The carton and packing materials used in shipping your new amplifier were specially designed to cushion it from the shocks and vibration that occur during transport. We suggest that you save the carton and packing materials for use in shipping, in the event you move, or the amplifier needs repair.

Installation and Maintenance

Installation:

- To insure proper operation and to avoid potential safety hazards, place the unit on a firm, level surface. When installing the unit in a rack, be sure the mounting hardware can support the amplifier's weight. To save space in your rack, the 700RB's feet can be removed using a Philips head screwdriver.
- Make certain that proper space is provided for ventilation. The 700RB Series requires at least ½ inch clearance above for proper ventilation. Never block the fan vent holes in the top or front of the amplifier. If the amplifier will be installed in a rack or other enclosed area, make sure that there is sufficient air movement within the enclosure to allow proper cooling. Consult your dealer for more information.
- Avoid installation in extremely hot or cold locations, and areas that are exposed to direct sunlight, or near heating equipment.
- Avoid moist or humid locations.
- Remember, power amplifiers generate heat. The heat sink fins and ventilation slots that form part of the enclosure are specially designed to remove this heat. Placing other electronic equipment near these heat-dissipation systems may possibly affect the long-term reliability of both your amplifier and the other equipment.

Moving the Unit:

Before moving the unit, be certain to disconnect any interconnection cords with other components, and make sure that you disconnect the unit from the AC outlet.

Cleaning:

When the unit gets dirty, wipe it with a clean, soft and dry cloth. If necessary, first wipe the surface with a soft cloth slightly dampened with mild, soapy water, followed by a fresh cloth with clean water. Wipe immediately with a dry cloth. Never use benzene, thinner, alcohol, or other volatile cleaning agents. Do not use abrasive cleaners, as they may damage the finish of metal parts. Avoid spraying insecticides near the unit.

Maintenance:

Your new amplifier is rugged. It was built to give you a lifetime of trouble-free operation, if it is operated in accordance with the instructions contained in this manual. The only maintenance required is cleaning. If you are going to move your amplifier around frequently, we recommend a road case to protect it from scratches and road wear.

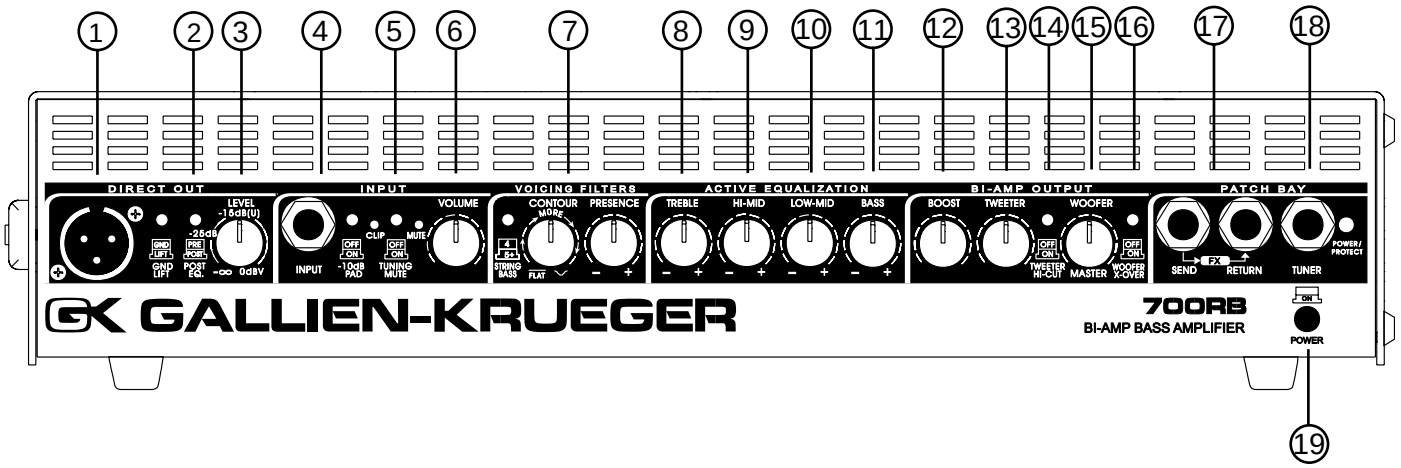

Front Panel Controls

1-Balanced Direct Out:
An electronically balanced output, that you can run to your P.A. system.

2-Pre/Post EQ Button:
Selects the direct out signal from before or after the EQ.

3-Direct Level Out
Controls the level at the direct out jack.

4-Input:
A standard ¼" input jack and input attenuator button. The button is generally left out, except in rare cases when the clip LED flashes.

5-Tuning Mute Button:
Set this switch to "On" when tuning up. No signal will be sent to the speakers, or the P.A. system.

6-Volume:
Sets pre-amp gain after the input stage. It is used in conjunction with the input pad, to optimize the amplifier's headroom.

7-Voicing Filters:

String Bass:
Setting this button voices the pre-amp for basses with "B" tuning. Leave it out and the amp is voiced like the 800RB, for 4 string basses.

Contour:
Drops the mid-range frequencies while boosting lows & highs.

Presence:
Adds edge and definition to higher frequencies.

Active Equalization:

8-Treble:
Boost and cut at 7 kHz ±15dB shelving type. Add or remove edge and definition.

9-High Mid:
Boost and cut at 1 kHz ±10dB, "Q Optimized," band pass type. Works on lower string harmonics, and effects the punch of your sound.

10-Low Mid:
Boost and cut at 250Hz ±10dB, "Q Optimized," band pass type. Works on the main body of your sound.

11-Bass:
Boost and cut at 60Hz ±10dB, shelving type. Controls low end push.

12-Boost:
A post EQ gain stage using GIVE technology which adds "growl" as it is turned up.

13-Tweeter/Master:
Controls output level to tweeter.

14-Tweeter Hi-Cut:
Cuts frequencies above 10kHz, producing a more "cone" like sound from the tweeter.

15-Woofer/Master:
Controls output level of 380W amplifier. For Bi-Amp operation, this controls the woofer level.

16-Woofer X-Over:
Set this button to engage the electronic crossover for the woofer. The tweeter is always crossed over.

17-Effects Loop:
Send and return jacks provided for the insertion of effects after the EQ, but before the boost section. Some effect units have gain, turning the BOOST down, will compensate for this.

18-Tuner Output
Output to tuner.

19-Power Switch
Turns the amplifier on or off. Should a problem occur during operation press this switch first.

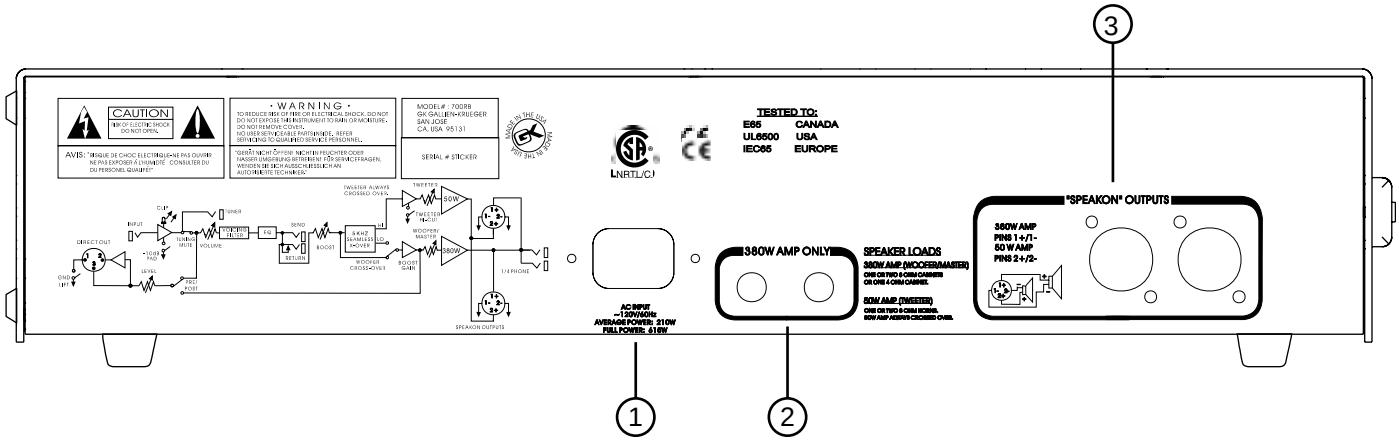

Rear Panel Controls

1- AC Receptacle:
The power cord is detachable and plugs in here.
2- 380W Amp Only:
380W power amp output for Full-Range operation only. They deliver 380 watts into 4 Ohms. Lower impedances should not be used. Each jack has a minimum of 8 Ohms each. Higher impedances such as 8 Ohms, 16 Ohms, or No Load are acceptable. No damage will result from operating the amplifier with the speakers disconnected.
3- "Speakon" Outputs:
Enables BI-AMP operation by connecting a GK-RBH Series cabinet with the provided 4 conductor Speakon cable. This connects the 50W amplifier allowing the Tweeter control on the front panel to control the signal going to the horn. See Bi-Amp and Normal Operation on page 7 for more information.

Caution:
Do not connect a Speakon cable labeled "Bridge Mode" to the 700RB. This may result in damage to the amplifier.

Maximum Recommended Load:
One 4 Ohm or two 8 Ohm cabinets on the 380W Amp.
One or two 8 Ohm horns on the 50W Amp.

CAUTION:

UNDER NO CIRCUMSTANCES SHOULD THE 380W AMP AND THE 50W AMP BE CONNECTED TOGETHER OR BE CONNECTED TO THE SAME SPEAKER !!!

700RB Series Combos

The 700RB Series combos deliver the 700RB's unique features and distinct sound by using a variety of internal speaker configurations, GK's RBH cabinet technology and a unique Lock N' Roll transport system.

Speaker Configurations:

700RB/112	One 8 Ohm 12″speaker and one 8 Ohm horn
700RB/115	One 8 Ohm 15″speaker and one 8 Ohm horn
700RB/210	Two 16 Ohm 10″speakers (wired in parallel for an 8 Ohm equivalent load)and one 8 Ohm horn

The 700RB combo electronics are identical to the 700RB head and are rated for the same maximum power output and speaker load (380W into 4 Ohms, and 75W into 4 Ohms). Maximum power is achieved by connecting one 8 Ohm extension cabinet (such as the 210RBH, 410RBH, or 115RBH) in addition to the combo's internal 8 Ohm speaker load. To drive more than one extension cabinet, the combo's internal speaker can be disconnected by unplugging the Speakon cable connected to the combo's back panel. Below is a detailed description of the maximum loads the combos can drive.

Maximum recommended load with the internal speaker connected:

One 8 Ohm cabinet on the 380W Amp.
One 8 Ohm horn on the 50W Amp.

Maximum recommended load with the internal speaker disconnected:

One 4 Ohm, or Two 8 Ohm cabinets on the 380W Amp.
One or Two 8 Ohm horns on the 50W Amp.

Lock N' Roll Transport System:

The Lock N' Roll transport system is designed for quick and easy rolling of the combo on flat surfaces such as carpet, flooring, pavement, etc. To engage the lock and roll handle, first move the combo into the upright position (front perpendicular to the ground). Next, stand behind the cabinet and lift the Lock N' Roll handle up with your right hand. The handle will lock into place after about 1 1/2 feet. Finally, grab the handle and tilt towards the back of the combo. The wheels on the bottom of the cabinet will automatically engage and allow smooth rolling.

To disengage the Lock N' Roll system, first return the combo to its upright position and stand behind the unit. Next, with your left hand, pull the locking latch at the base of the handle to your left, while pushing the handle down gently with your right hand. Finally, push the handle down until it stops and is flush with the top of the combo.

The 700RB Series combos are designed for maximum setup versatility to accommodate a variety of playing situations. For practicing and close monitoring situations, tilt the cabinet back into its "Rock Back" position. For stronger bass and audience projection, leave the combo in the upright position.

Tech Talk

Characteristics of the 700RB:

The 700RB Series is a flexible, state-of-the-art Bass Amplifier, designed to deliver maximum performance, and be simple to operate. This is accomplished through a few, very important features:

- Extremely high current power supply and power amp circuitry, gets the sound out of your head.
- Bi-Amp sound, two power amps, 380 Watts for the woofer, and 50 Watts for the horn.
- Electronic crossover, seamless two way sound.
- Four, Bass specific bands of active equalization for precise tone control.
- Three voicing filters for shaping and customizing your sound.
- Balanced direct output with level control eliminates need for a direct box.
- Continuously variable fan cooling.
- Designed and Built in the U.S. for years of reliability and quality service.

Current Output & Bass Response:

When a power amplifier is pushing several speaker cones, and a high-power transient like a string slap comes along, the amp has to tap into a large power reserve to maintain cone control. It's kind of like grabbing a swing at the bottom of it's travel and trying to push it the other way - it could knock you over. If the amplifier doesn't have this ability, the sound is unresponsive and less out front. The amp loses it's punch and feel at higher playing levels. Instead of responding to your every command, the amplifier simply cuts those transients off, leaving you with the feeling that something is missing in your sound.

Since most amplifiers have limited output current capacity, they need "current limiting circuits" to protect against self-destruction. High-power transients trigger these circuits, which rob the amplifier of it's ability to control speaker cones. This creates a mushy, unresponsive feel to your sound. The 700RB Series has extremely high current capacity, so it doesn't need current limiting circuits for over-load protection.

There is nothing in the 700RB Series power amp to come between you and your sound except faithful, raw power.

Bi-Amp Sound:

Bass players have always liked the growl they get from slight overdrive. In GK amps this comes partly from the boost circuits and partly from the power amp. The problem is that growl, sounds great through woofers, and horrible through horns. In the typical full range system with a passive crossover, there is no way to get growl and keep the definition that the horn provides. The horn always has to be turned down. In a Bi-Amp system like the 700RB Series, the woofer and the horn, each have their own power amp, allowing us to get growl in the woofer only, while keeping the horn sound crystal clear. Now you can over-drive the woofer as much as you want, and leave the horn all the way up, keeping the definition it brings to your sound. Running the 700RB Series in Bi-Amp mode through a GK-RBH cabinet, for the first time allows full access to the benefits of Bi-Amp sound. This is the reason the 700RB Series is a Bi-Amp, and it is the reason you will be able to explore an entirely new territory of Bass sound.

Tech Talk

Electronic Crossover:

Bi-Amp systems allow the crossover to be electronic and therefore, have much higher quality than passive crossovers. A crossover separates the sound into two parts (high and low frequency). The highs are sent to the horn or high frequency cabinet and the lows are sent to the woofer. In an ideal system, adding the highs and the lows back together would recover the original signal. Most passive Bass systems have very poor crossovers, resulting in severe signal corruption. When these signals are added back together (as in your ear), they have very little in common with the original signal. The 700RB Series uses a Constant Voltage crossover which results in very little signal corruption. In fact, when the high and low signals are added back together, the result is extremely close to the original. This makes a two-way system sound more seamless, and less artificial. We have also included a Tweeter Hi-Cut switch in the crossover, which rolls the tweeter off above 10kHz giving it a less glassy, more cone like sound.

Equalization:

The sound you want is in your head, but you just can't get it. You think it's you, your bass or maybe your amp. Yes, your amp. Standard tone controls and graphic equalizers don't get it. Sure, they give you plenty of variation, but they don't provide what the instrument really needs. The fact is, graphic equalizers are intended for room equalization, and are only put in bass amps because it's a no-brainer for the designer. The equalization in Gallien-Krueger amplifiers reflects 30 years of continuous development and refinement. The GK equalizer is unique to the industry, it's not just a normal four band equalizer, each section is a special circuit optimized to perform a Bass specific job in its range of operation. These sections are wired in Series, so they add to one another creating a tremendously flexible equalizer, that doesn't sound weird at any setting. You actually might even get to hear that sound in your head.

Voicing Filters:

Voicing filters are used to completely re-voice the amplifier. In the case of the Contour and String Bass controls, the effect is dramatic.

The Contour control tunes between two different shaping circuits, with greatly different response. With the control all the way up, the low end is slightly boosted, the mids are dropped and the high end is pushed up. This is a response contour not available with a normal equalizer, and is only found in GK amplifiers.

The way a Bass amp deals with the instrument low string is a critical part of it's sound. In fact, a five string instrument requires an entirely different low end response than a four string instrument. No equalizer can make the necessary adjustments to accommodate both, however the String Bass button on the 700RB Series does just that. When it is out, the 700RB is voiced like the 800RB (the world's classic four string amp). Push it in and the 700RB is voiced for five string instruments. For some playing styles you may want it in, even with a four string instrument…at least now, you have a choice!

"G.I.V.E." Technology:

As in all GK pre-amps, the 700RB Series pre-amp incorporates what we call G.I.V.E (Gate Induced Valve Effect) Technology. We use field effect devices with the gate biased in a way that emphasizes the optimum harmonic content of the signal. Working in concert with our unique Four Band Active Equalizer, and three stage Voicing Filter Section, G.I.V.E. technology produces a consistently pleasing bass tone.

Tech Talk

Cool Running = Reliability:

The 700RB Series uses a "dual rail power supply" that generates about half the heat of conventional amplifiers. Low output signals run off a low voltage supply, and high level signals run off a high voltage supply. This keeps the amp running a lot cooler and makes it much more reliable. To cool the amp when its being driven hard, we've designed a temperature sensitive fan cooling system. When the amp is under a light load, the fan is off or running at a low speed, reducing fan noise. As the amp works harder, the fan speed increases to keep everything cool.

Smart Protection Circuitry:

The 700RB's protection circuitry constantly monitors for unsafe operating conditions such as short circuits, miss-wired speaker cables, blown speakers, improper ventilation and incorrect speaker configurations. In addition, protection is provided during power up/down. If the 700RB senses any unsafe operating conditions, the output signal is immediately muted and the power light changes to from Green to Red. The amplifier will remain muted until the fault is removed. If the protection circuit activates while playing, turn the amplifier off and check the amplifier speaker output connections. Be sure that you are not exceeding the maximum recommend load described in this manual. Also, check to see that you have connected the amplifier to your speakers as described in Bi-Amp and Normal Operation on page 7. If the problem persists, contact GK directly for advice.

Low Noise Operation:

The 700RB Series uses a high gain, high headroom, low noise input stage. It has such a large dynamic range (60v p-p) that very few instruments can overdrive it. Even most basses with "active" electronics do not need the input attenuator to be set. The benefit to you is less hiss from your horn, and over all, much less noise.

Speakon Cables:

To make use of the 700RB's Bi-Amp feature you will need to use the four conductor Speakon cable (provided with the 700RB head, and included with the combos for connection to the internal speaker) to connect to a GK RBH Series cabinet. This specially designed cable carries the signals for both amplifiers (380W Woofer Amp and 50W Tweeter Amp) to the speaker cabinet. Plus, they are the coolest speaker connectors currently available. Below is a table describing the Speakon cable connections to the 700RB head and combos.

Speakon Pin #	Signal	WireColor
1+	380W Woofer Amp +	White
1-	380W Woofer Amp -	Black
2+	50W Tweeter Amp +	Red
2-	50W Tweeter Amp -	Green

To obtain an additional 4 conductor Speakon cable for use with the 700RB please contact your local dealer or contact GK directly.

In Closing:

You should now have a thorough understanding of how your new 700RB Series amplifier works and what advantages it can offer you in getting "your" sound. We thank you for reading the Owner's Manual and wish you the best of times! Please send us your comments via www.gallien-krueger.com or email us at sales@gallien.com.

Block Diagram

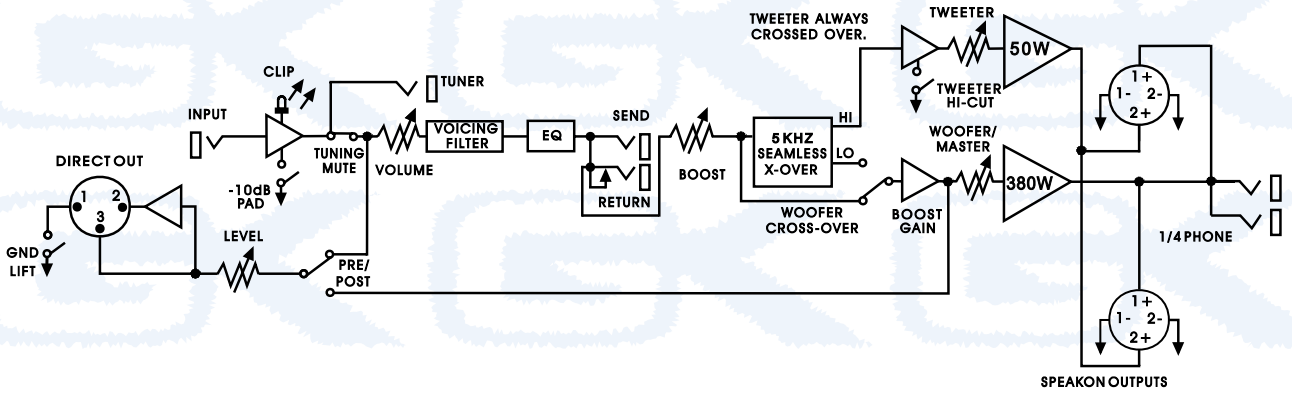

700RB Series Specifications:

Output Power:	
380W Amplifier	225W @ 8 Ohms
	380W @ 4 Ohms
50W Amplifier	50W @ 8 Ohms
	75W @ 4 Ohms
Input Section:	
Maximum Input Level	0.6V Rms
With -10dB pad	1.6V Rms
Input Impedance	1M Ohm
Send output impedance	220 Ohm
Return input impedance	50k Ohm
Tuner Output Impedance	10k Ohm
Direct Output Impedance	500 Ohms
Equalizer:	
Bass	±10db @ 60Hz
Lo-Mid	+6db/-10db @ 250Hz
Hi-Mid	+6db/-10db @ 1kHz
Treble	±14db @ 7kHz
Voicing Filters:	
String Bass Button	+11db@20Hz
Contour	+2db@50Hz / -10db@500Hz / +3db@7kHz
Presence	+9db@10kHz
Crossover	Triple pole constant voltage crossover at 5kHz
Noise	-90db referenced to 380W, "A" weighted

Cooling	Continuously Variable-Speed Fan
Amplifier Protection:	
	Full short circuit, thermal,& RF protection. Stable into reactive and mismatched loads. Five second muted warm-up.
Dimensions (HxWxD):	
	3 1/2" x 17" x 8 ¼" (2 Rack Spaces)
Weight:	
	18lbs
Power Requirements:	
U.S.A./Canada	120V/60Hz
	615W (full power)
	210W(average power)
Europe	230V/50Hz
	615W (full power)
	210W (average power)
Japan	100V/50Hz
	615W (full power)
	210W (average power)

GK GALLIEN-KRUEGER

700RB *Series* Owner's Manual
Part #160-0001-B
Printed in the U.S.A.