BOARD C01 SCHEMA C01CL | BOARD C01 SCHEMA C01CL | BOARD C02 SCHEMA : C02CL_ML | BOARD C02 SCHEMA : C02CLPLM | BOARD C03 SCHEMA C03CL | BOARD C04 SCHEMA C04 | BOARD C05 SCHEMA C05 | BOARD C02 SCHEMA : C02CLPLM | BOARD C02 SCHEMA : C02CLPLM | BOARD C02 SCHEMA : C02CL_LL | BOARD C02 SCHEMA : C02CL_LL | BOARD C02 SCHEMA : C02CL_LL | BOARD C02 SCHEMA : C02CL_LL

KNOB REAN P670-0A-D Black body /Red pointer

KNOB REAN P120-0-33 Black body

KNOB REAN P670-0F-D Black body/White pointer

KNOB REAN P670-0F-D Black body/White pointer

KNOB REAN P670-0F-D Black body/White pointer

KNOB REAN P670-0D-D Black body/Blue pointer

KNOB REAN P120-0-33 Black body

KNOB REAN P120-A-33 Red body

KNOB REAN P120-0-33 Black body

KNOB REAN P778-F0-KL White body/Black pointer

MONO INPUT | MONO INPUT | STEREO INPUT | STEREO INPUT

GAIN — MIN — MAX

MIC / LINE | MIC / LINE | LINE / MIC | CD PHONO / MIC

EQUALIZER — HI — MID — LO

EFFECT

PRE / POST

PFL

INSERT

VOICE OVER | VOICE OVER | START | START

DJ1 | DJ2 | 1 | 2

+6 — 0dB — -6 — 12 — 20 — 30

DJ Club

8 — 5 — 3 — 1 — 0dB — 1 — 3 — 5 — 7 — 10 — 15 — 20

LEFT — RIGHT — PFL

MASTERS

STEREO 1 — STEREO 2 — EFFECT SEND

LEFT / RIGHT

MONO 1 — MONO 2 — EFFECT RETURN

PFL — PFL — ON

VOICE OVER — TIME — LIMIT

FREEVOX

DISCOSOUND — ON

STEREO INPUT | STEREO INPUT | STEREO INPUT | STEREO INPUT | STEREO INPUT | STEREO INPUT

GAIN — MIN — MAX

CD PHONO / MIC | CD PHONO / MIC | LINE 1 / LINE 2 | LINE 1 / LINE 2 | LINE 1 / LINE 2 | LINE 1 / LINE 2

EQUALIZER — HI — MID — LO

EFFECT

PRE / POST

PFL

START

3 | 4 | 5 | 6 | 7 | 8

+6 — 0dB — -6 — 12 — 20 — 30

ON

V+ V-

PHONES

2 — 3

CROSS FADE

KNOB CLIFF CS2 Black body/White pointer

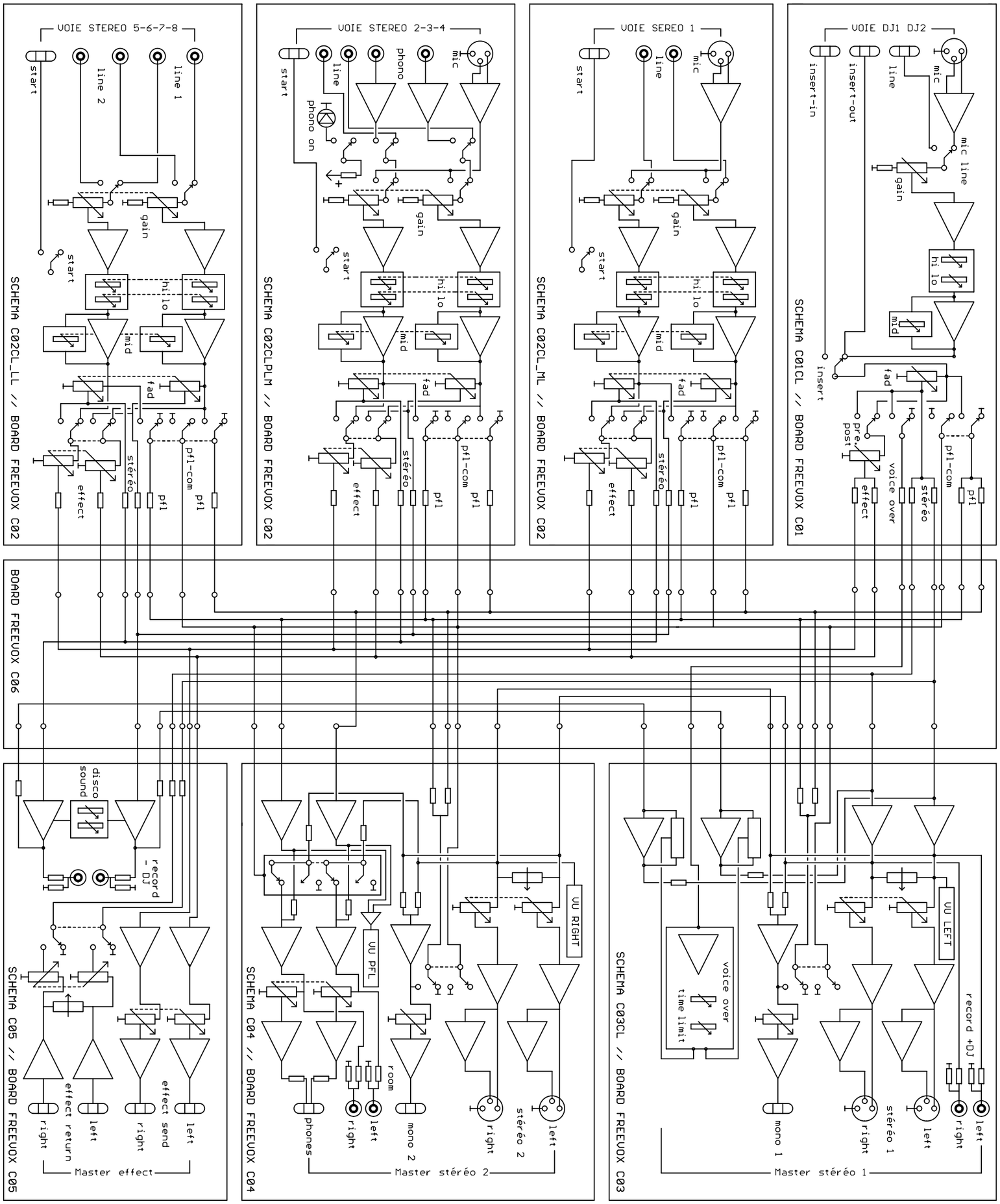

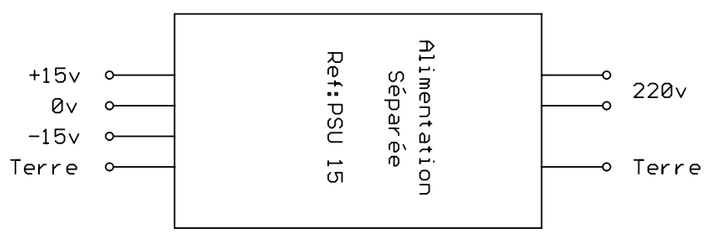

SYNOPTIQUE DJ CLUB

FREEVOX

TEL: 01 46 15 47 15
FAX: 01 46 15 47 16

Drawing: CLUBSY
Last modified: 20/04/2001 11:31:18
Plot date: 18/05/2001 12:10:15

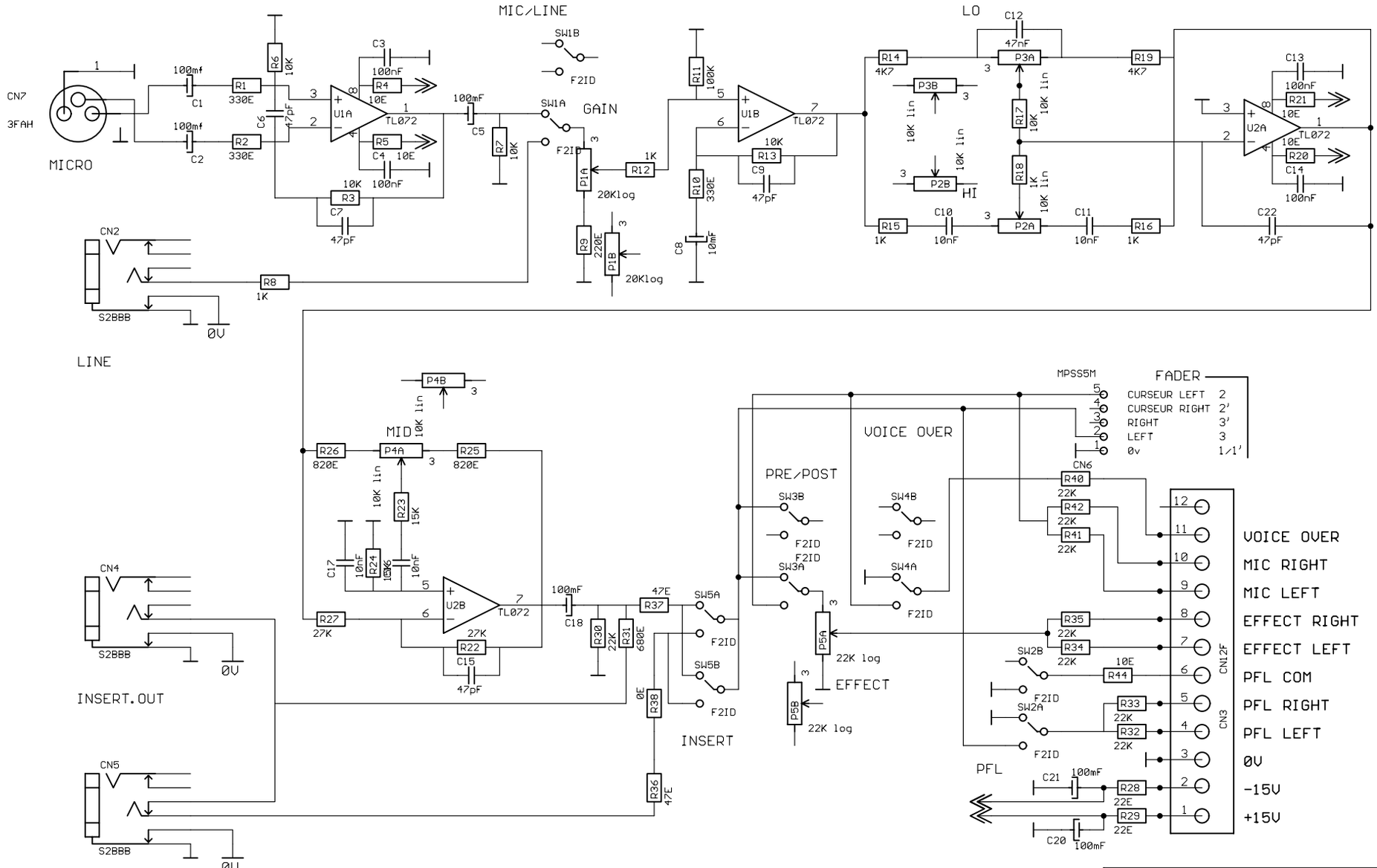

FREEVOX

TEL: +33 1 46 15 47 15
FAX: +33 1 46 15 47 16

Document: C01CL

REV:

VOIE MICRO/LINE DJ CLUB

Date: 28/02/2001 08:55:28

Sheet: 1/1

**** FOR DJ CLUB ****

LAYOUT TO SHOW COMPONENT ALLOCATION
MONO INPUT DJ1-DJ2 MICRO/LINE
* BOARD ref: C01
* SCHEMA ref: C01CL

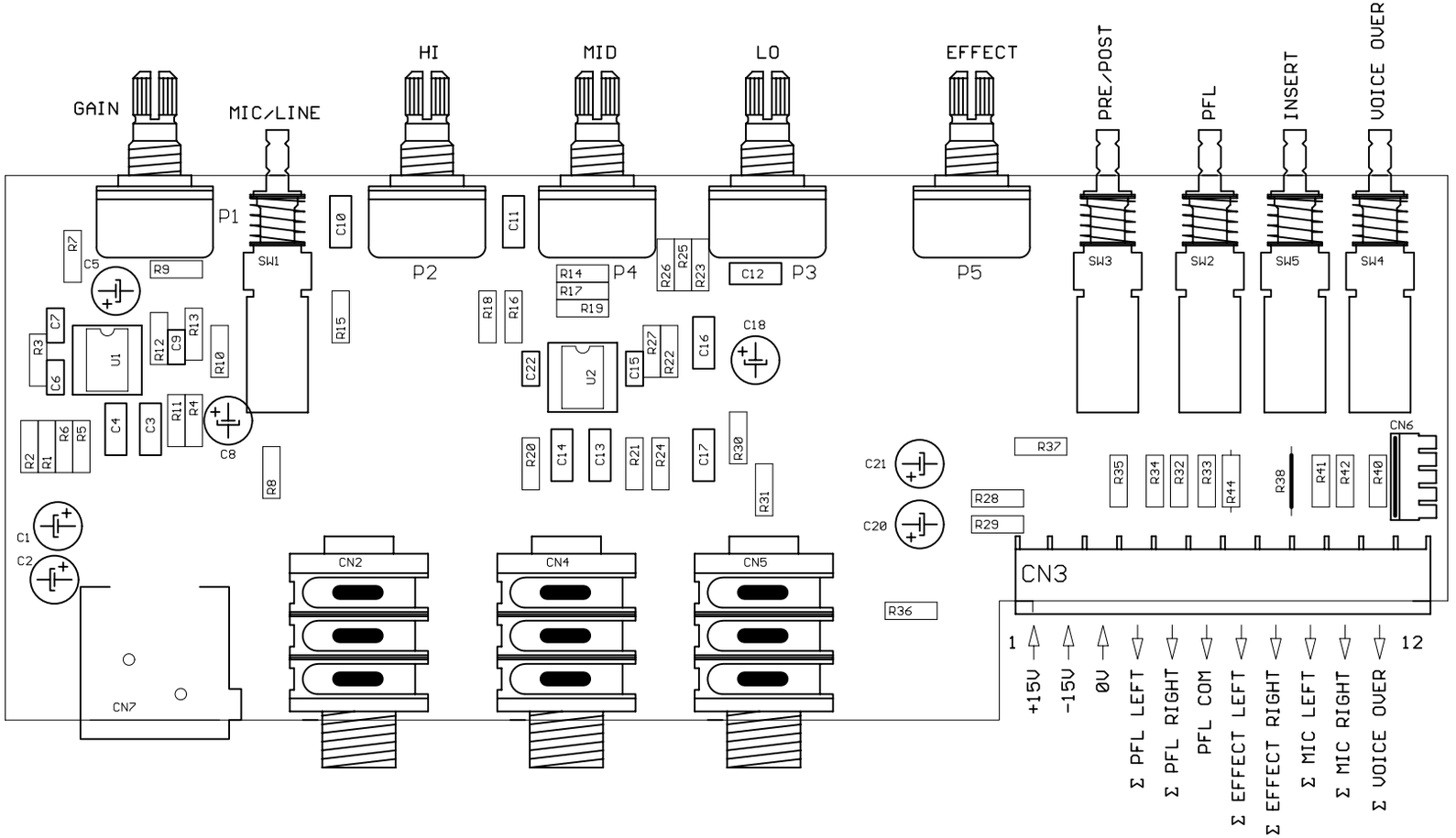

FADER
2 CURSEUR LEFT
2' CURSEUR RIGHT
3' RIGHT
3 LEFT
1/1' 0v

FREEVOX
TEL: 01 46 15 47 15
FAX: 01 46 15 47 16

Drawing: C01CL
Last modified: 06/03/2001 08:27:52
Plot date: 18/05/2001 12:13:36

Date: 06/03/2001 09:49:26	Sheet: 1/1
Document: C02CL_ML	REV:
VOIE STEREO LINE/MICRO DJ CLUB	

FREEVOX
TEL: +33 1 46 15 47 15
FAX: +33 1 46 15 47 16

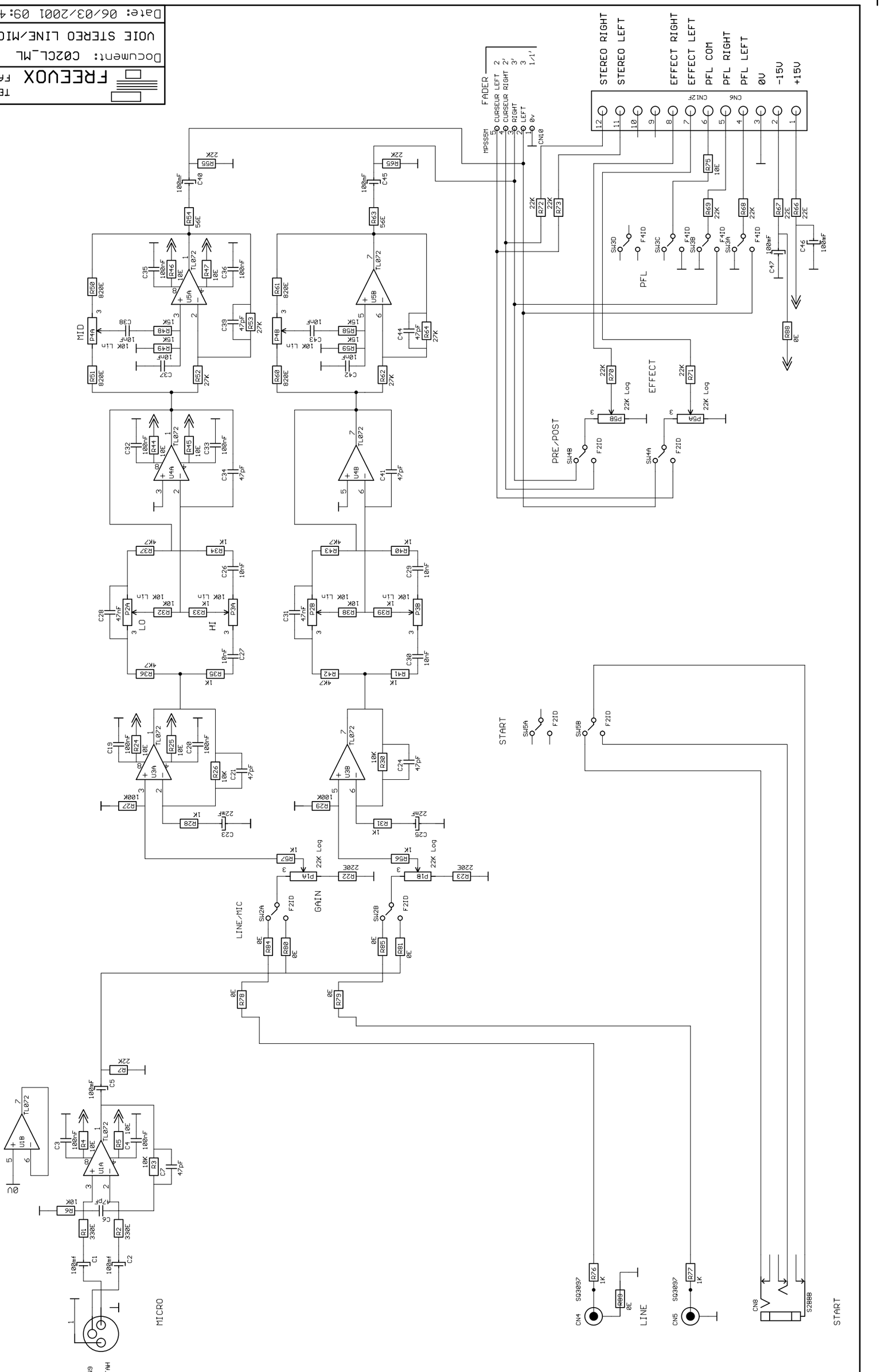

**** FOR DJ CLUB ****

LAYOUT TO SHOW COMPONENT ALLOCATION
STEREO INPUT 1 LINE/MICRO
* BOARD ref: C02
* SCHEMA ref: C02CL_ML

FREEVOX
TEL: 01 46 15 47 15
FAX: 01 46 15 47 16

Drawing: C02CL_ML
Last modified: 06/03/2001 09:29:36
Plot date: 18/05/2001 12:17:30

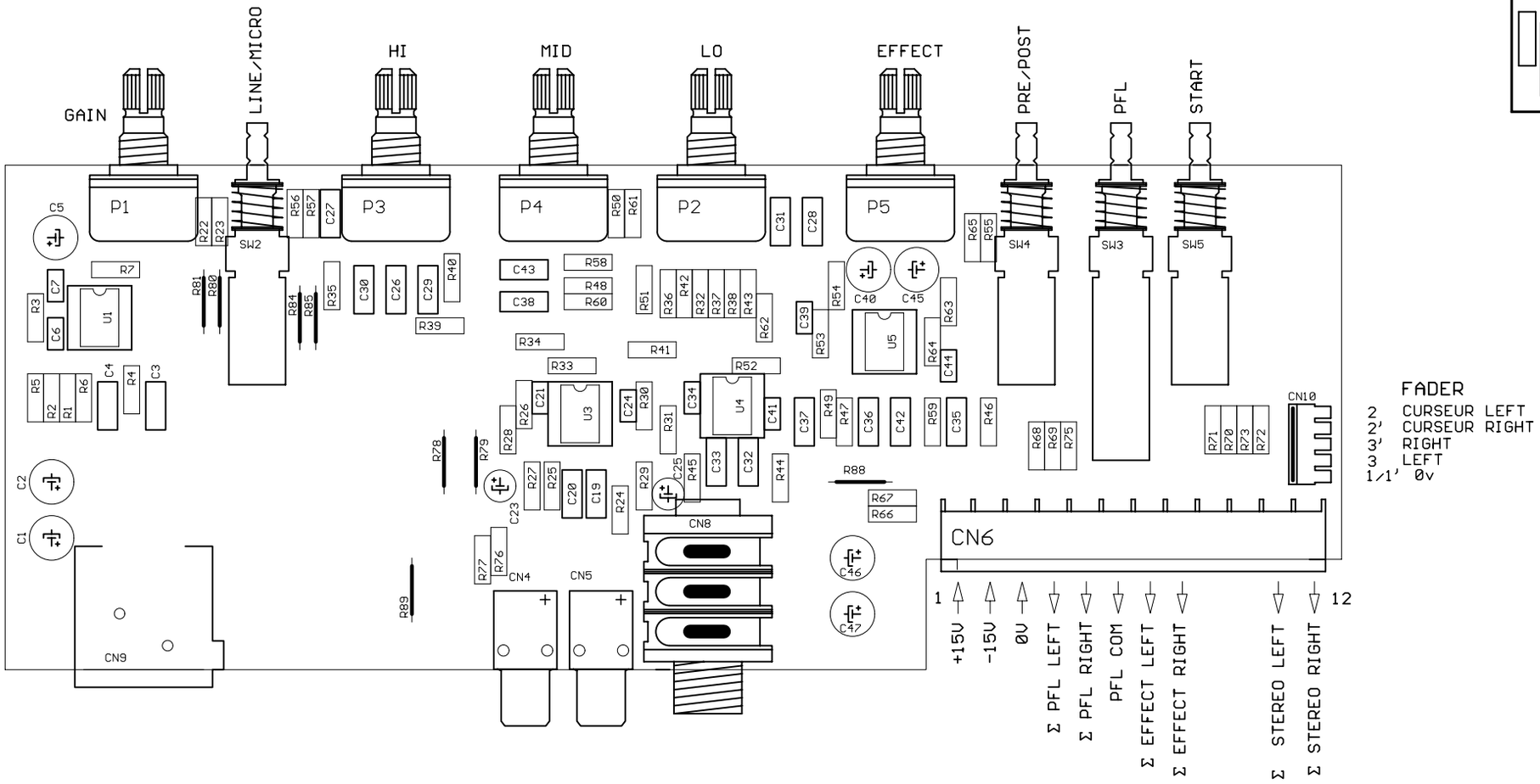

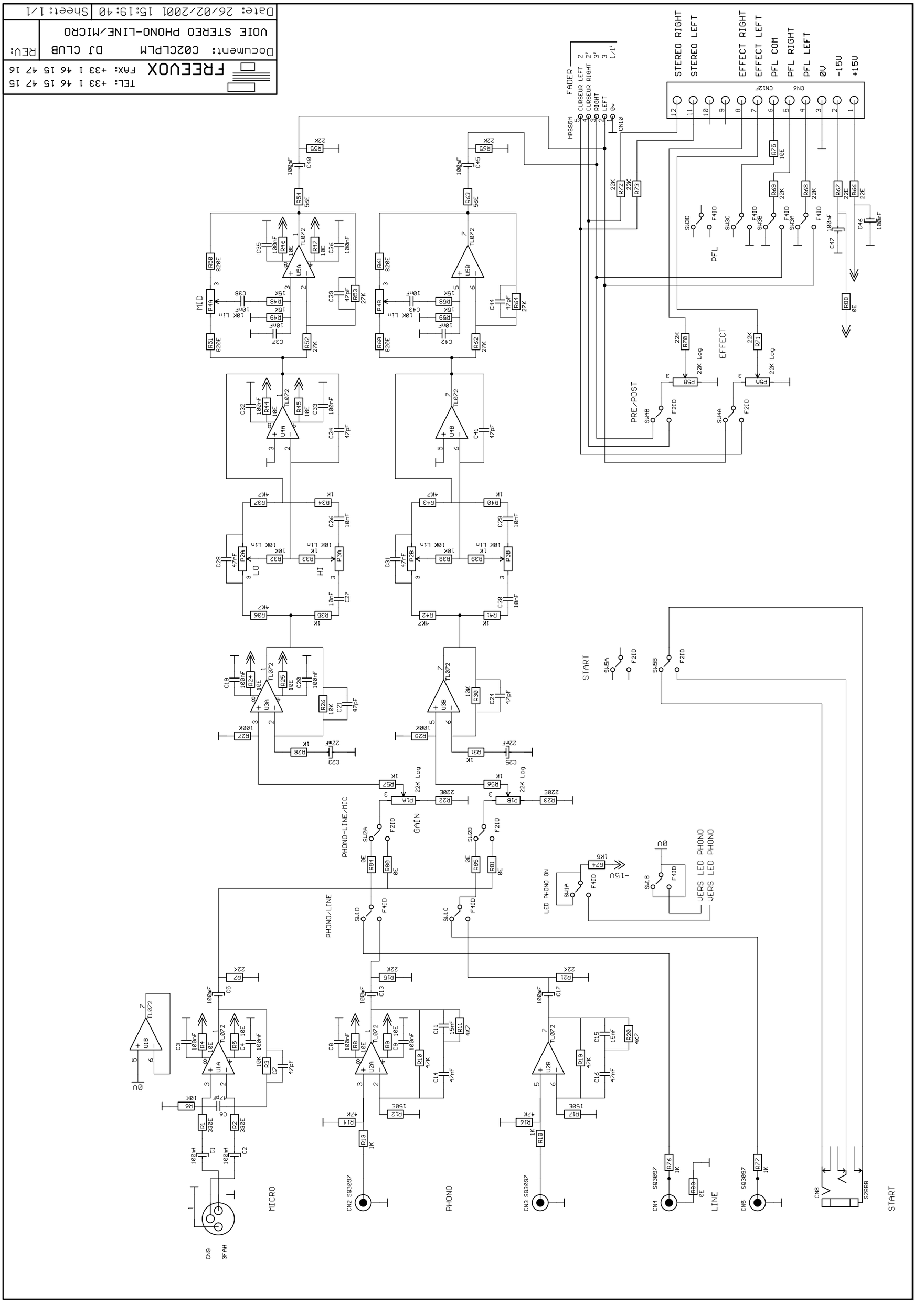
FREEVOX
TEL: +33 1 46 15 47 15
FAX: +33 1 46 15 47 16
Document: C02CLPLM
DJ CLUB
VOIE STEREO PHONO-LINE/MICRO
REV:
Date: 26/02/2001 15:19:40
Sheet: 1/1
STEREO RIGHT
STEREO LEFT
EFFECT RIGHT
EFFECT LEFT
PFL COM
PFL RIGHT
PFL LEFT
0V
-15V
+15V
FADER
CURSEUR LEFT
CURSEUR RIGHT
RIGHT
LEFT
MID
LO
HI
GAIN
PHONO-LINE/MIC
PHONO/LINE
PRE/POST
EFFECT
PFL
START
LED PHONO ON
VERS LED PHONO
MICRO
PHONO
LINE
START

**** FOR DJ CLUB ****

LAYOUT TO SHOW COMPONENT ALLOCATION
STEREO INPUT 2-3-4 PHONO-LINE/MICRO
* BOARD ref: C02
* SCHEMA ref: C02CLPLM

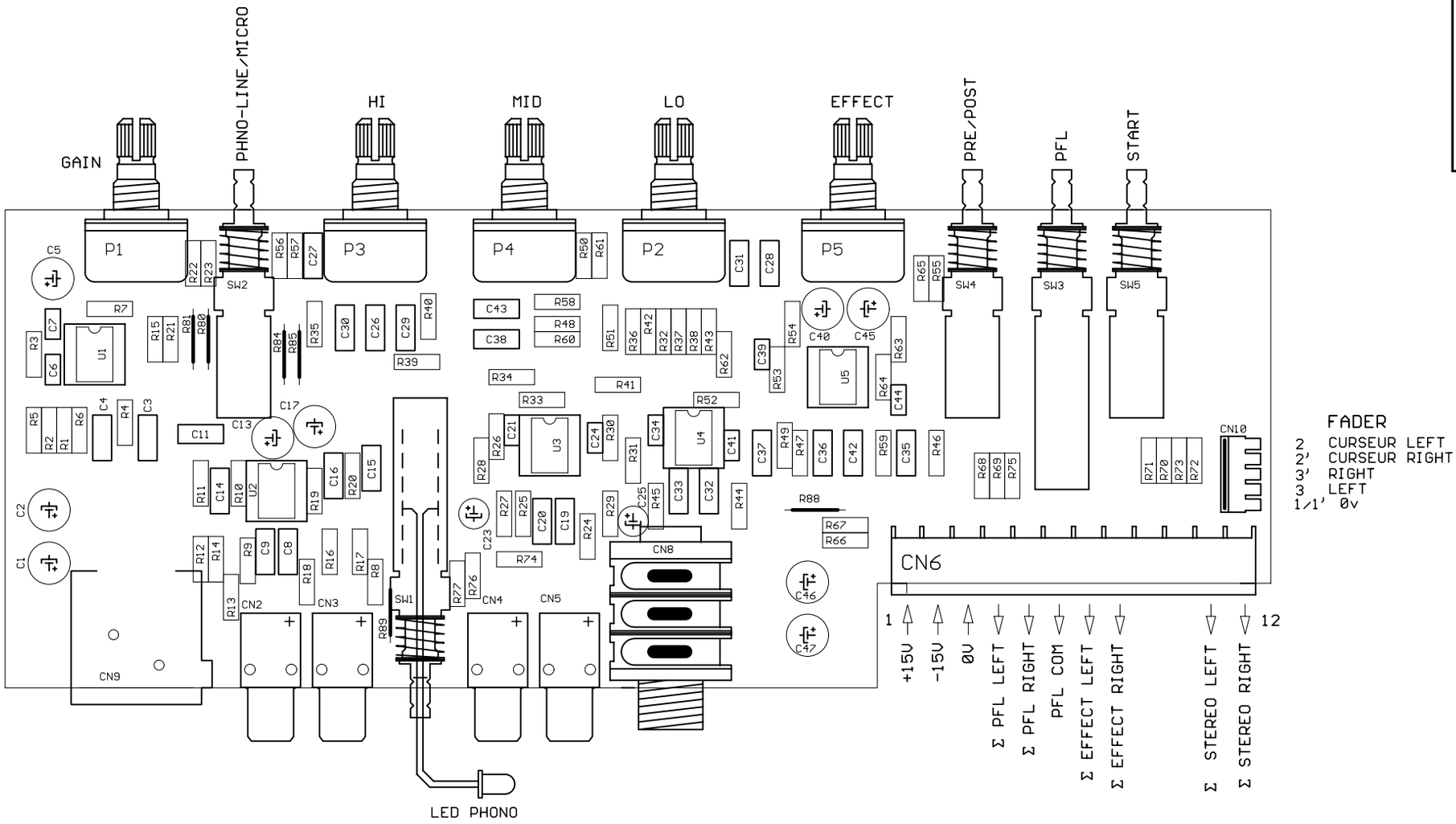

FREEVOX
TEL: 01 46 15 47 15
FAX: 01 46 15 47 16

Drawing: C02CLPLM
Last modified: 28/02/2001 08:44:20
Plot date: 18/05/2001 12:19:52

FREEVOX	Document: C02CL_LL
TEL: +33 1 46 15 47 15	VOIE STEREO LINE1/LINE2 DJ CLUB
FAX: +33 1 46 15 47 16	REV:
Date: 26/02/2001 15:16:04	Sheet: 1/1

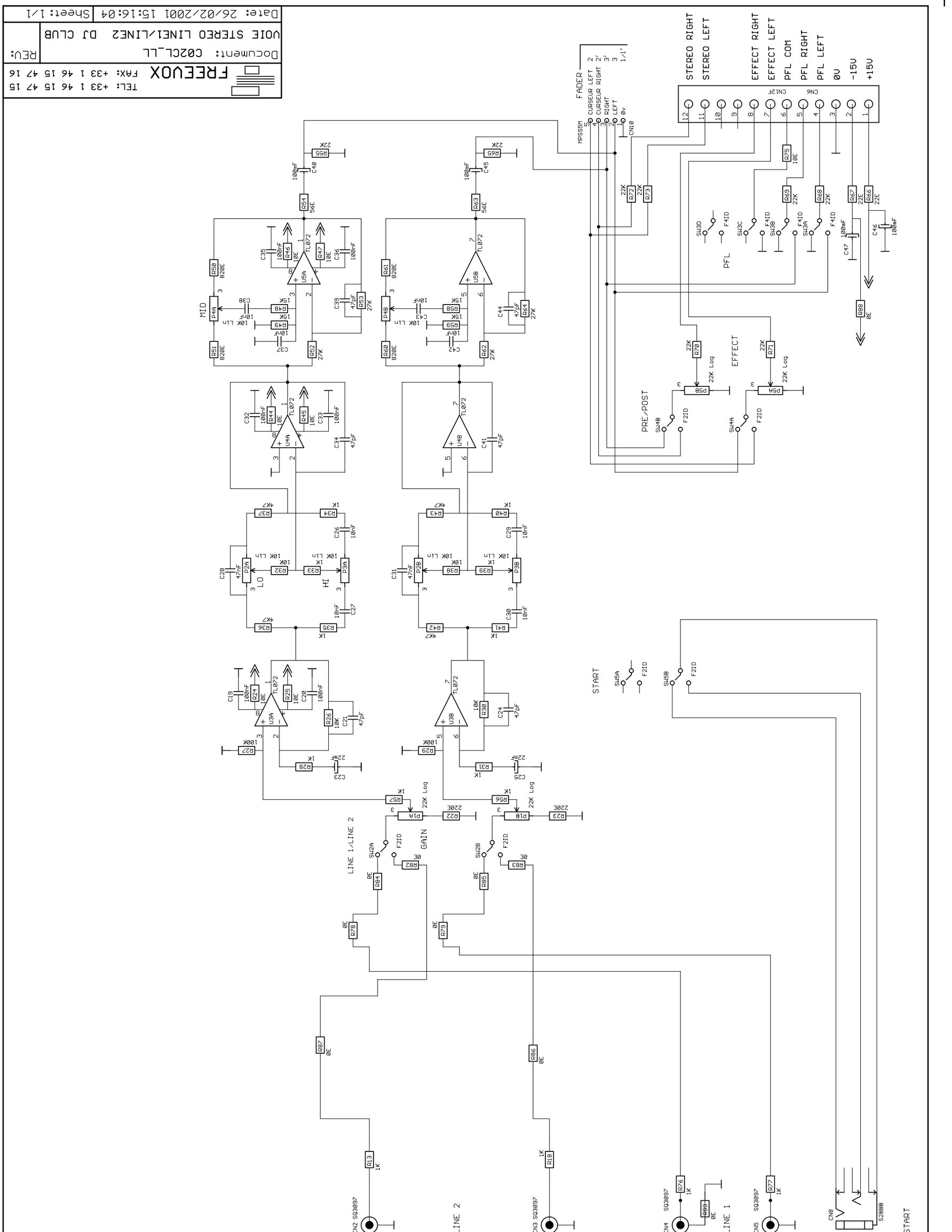

**** FOR DJ CLUB ****

LAYOUT TO SHOW COMPONENT ALLOCATION
STEREO INPUT 5-6-7-8 LINE1/LINE2
* BOARD ref: C02
* SCHEMA ref: C02CL_LL

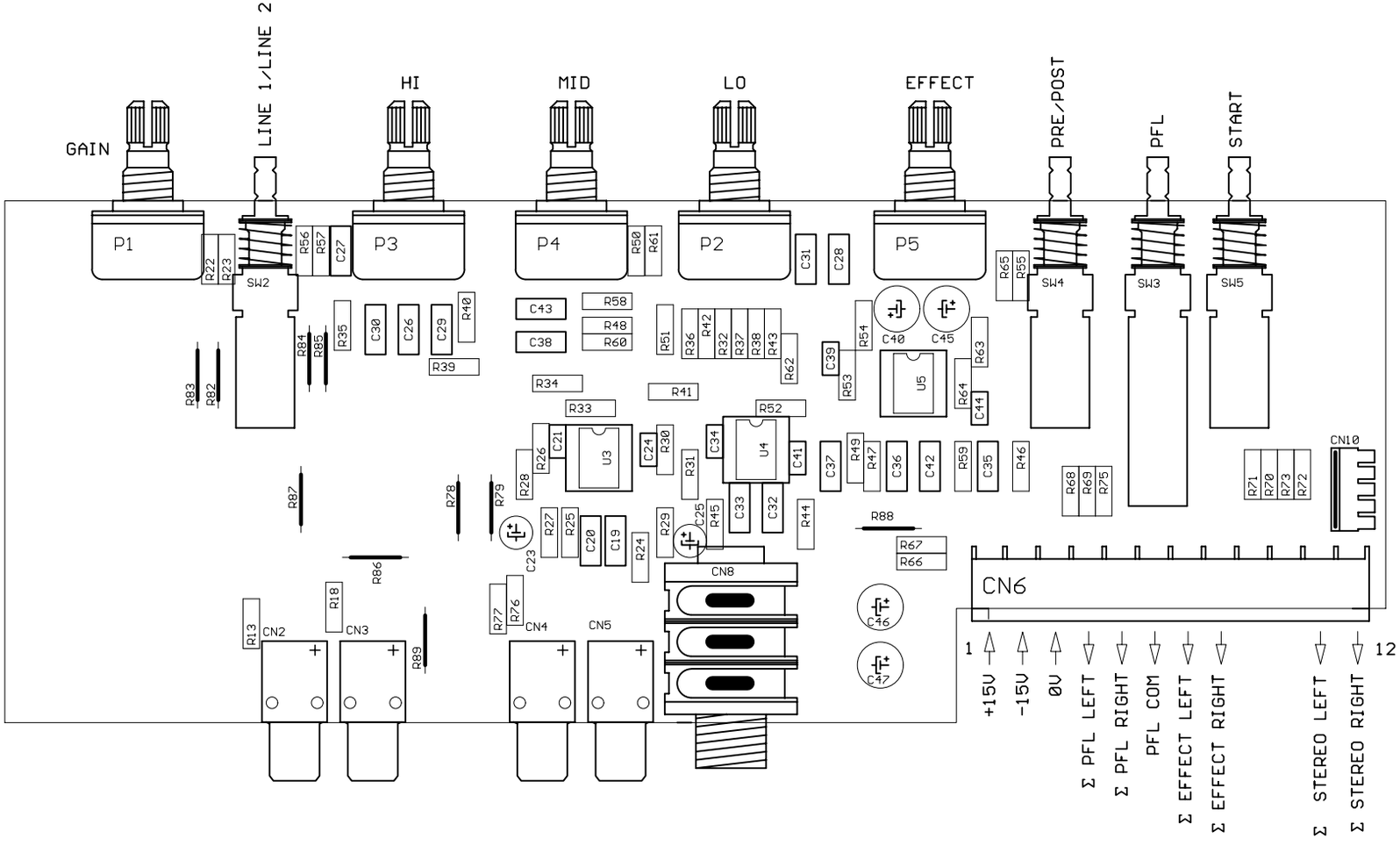

FADER
2 CURSEUR LEFT
2' CURSEUR RIGHT
3' RIGHT
3 LEFT
1/1' 0v

FREEVOX
TEL: 01 46 15 47 15
FAX: 01 46 15 47 16

Drawing: C02CL_LL
Last modified: 06/03/2001 11:24:30
Plot date: 18/05/2001 12:22:38

FREEVOX
TEL: +33 1 46 15 47 15
FAX: +33 1 46 15 47 16

REV:

Document: C03CL

MASTER STEREO 1 DJ CLUB

Date: 06/03/2001 16:47:38 Sheet: 1/1

CN5 MPSS3M

R35 56E

R84 0E — R31 2K2 — R33 1K — CN3 SQ3097 — REC+MIC

R85 0E — R32 2K2 — R34 1K — CN4 SQ3097 — REC+MIC

R90 0E

3MAH CN1 — OUT LEFT

3MAH CN2 — OUT RIGHT

U1A U1B U2A U2B U3A U3B TL072

C1 C2 C3 C4 C5 C6 C7 C8 100nF 100mF 12pF

R1 R2 R3 R4 R5 R6 R7 R8 R9 R10 10E 0E 22K 1K 680E

R82 22K — 0V

BAL — P2A 22K Log — STEREO 1

10K Lin — P1

R83 22K — 0V

P2B 22K Log — STEREO 1

R14 R24 10K — R13 R23 47K — C11 C17

R11 R12 R21 R22 10E — -15V

R15 R25 10K — C13 C20 12pF

R16 R26 220E — C9 C15 100nF

R17 R27 10K — C12 C19 100mF

R18 R28 10K

R19 R29 10K

R20 R30 220E — C14 C18 100mF

SW1B — F2ID PFL

SW1A — F2ID

R78 10E — R46 22K — R45 22K

R48 20K — R47 20K

U4A U4B TL072

C21 C22 C23 100nF 12pF

R36 R37 R38 10E 10K

-15V

MONO

P3 22K log

R40 1K — R41 100K — R42 3K3 — R43 10K

C26 12pF

R88 0E — C25 100mF — R39 220E — R44 10K

S2BBB — CN6 — MONO

CN7 CN14F

+15V — R59 22E — C34 100mF — R79 0E

-15V — R60 22E — C33 100mF — R80 0E

0V — R81 0E

PFL LEFT

PFL RIGHT

PFL COM

OUT Σ LEFT — R86 0E

OUT Σ RIGHT — R87 0E

IN Σ MIC LEFT

IN Σ MIC RIGHT

IN Σ VOICE OVER

IN VOICE LEFT

IN VOICE RIGHT

U5A U5B U6A U6B TL072

C27 C28 C29 C30 C31 100nF 12pF 100mF

R49 R50 R51 R52 R53 R54 R55 R56 R57 R58 10E 22K 10K

R76 R77 2K2

P4B P4A 22K log

PH2 PH1 P873_G35

LIMIT

R75 1K

C35 C36 C37 C38 C39 C40 100nF 12pF 10mF 100mF

R61 R62 R63 R64 R65 R66 R67 R68 R69 10E 22K 1K 3K3 4K7 10K

C41 10mF

R70 39K — BC548B Q1 — BC548B Q3 — BC548B Q2

R71 R74 10K — R72 3K3

TIME — 10K lin — P5 — R73 1K — C42 100mF

** FOR DJ CLUB **

LAYOUT TO SHOW COMPONENT ALLOCATION
MASTER STEREO 1
* BOARD ref: C03
* SCHEMA ref: C03CL

FREEVOX
TEL: 01 46 15 47 15
FAX: 01 46 15 47 16

Drawing: C03CL
Last modified: 06/03/2001 16:58:24
Plot date: 18/05/2001 12:24:55

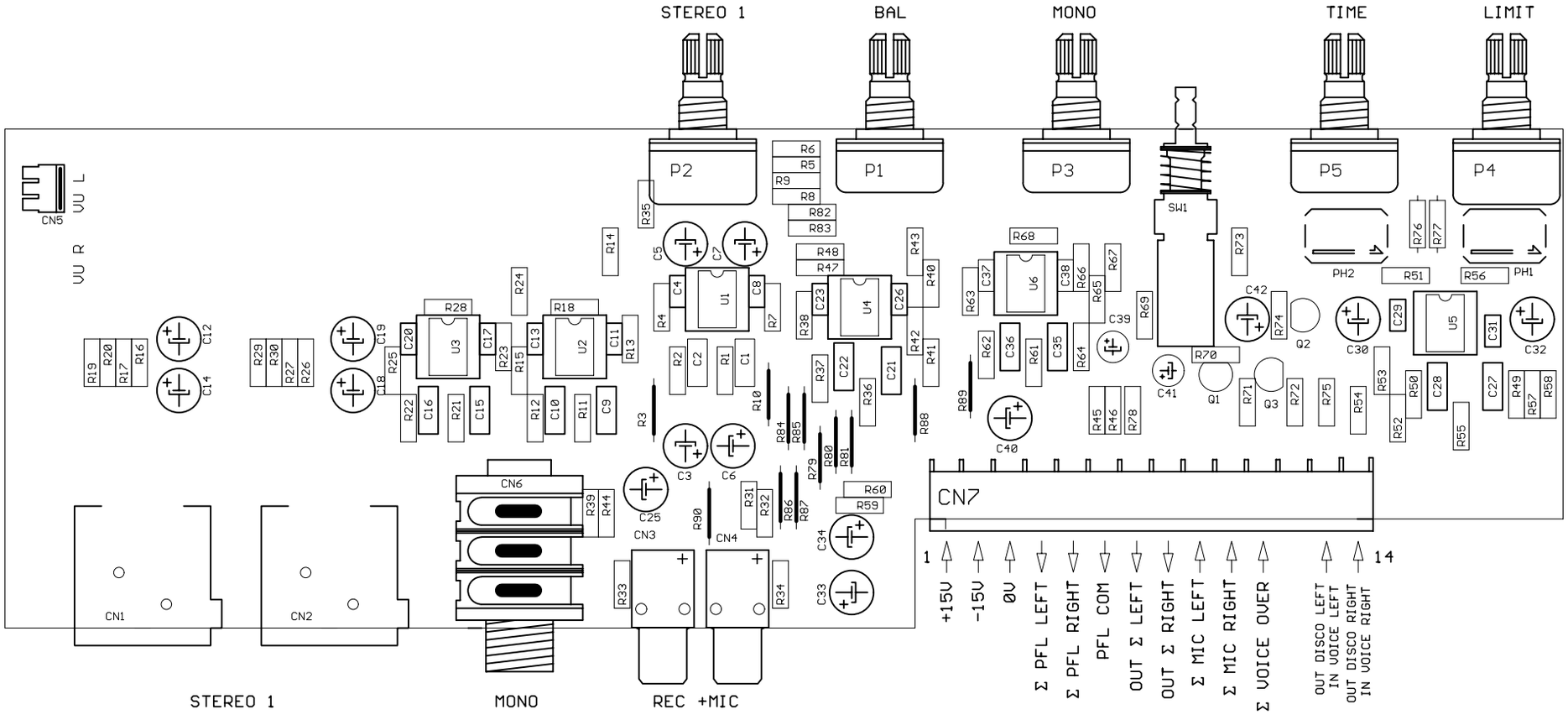

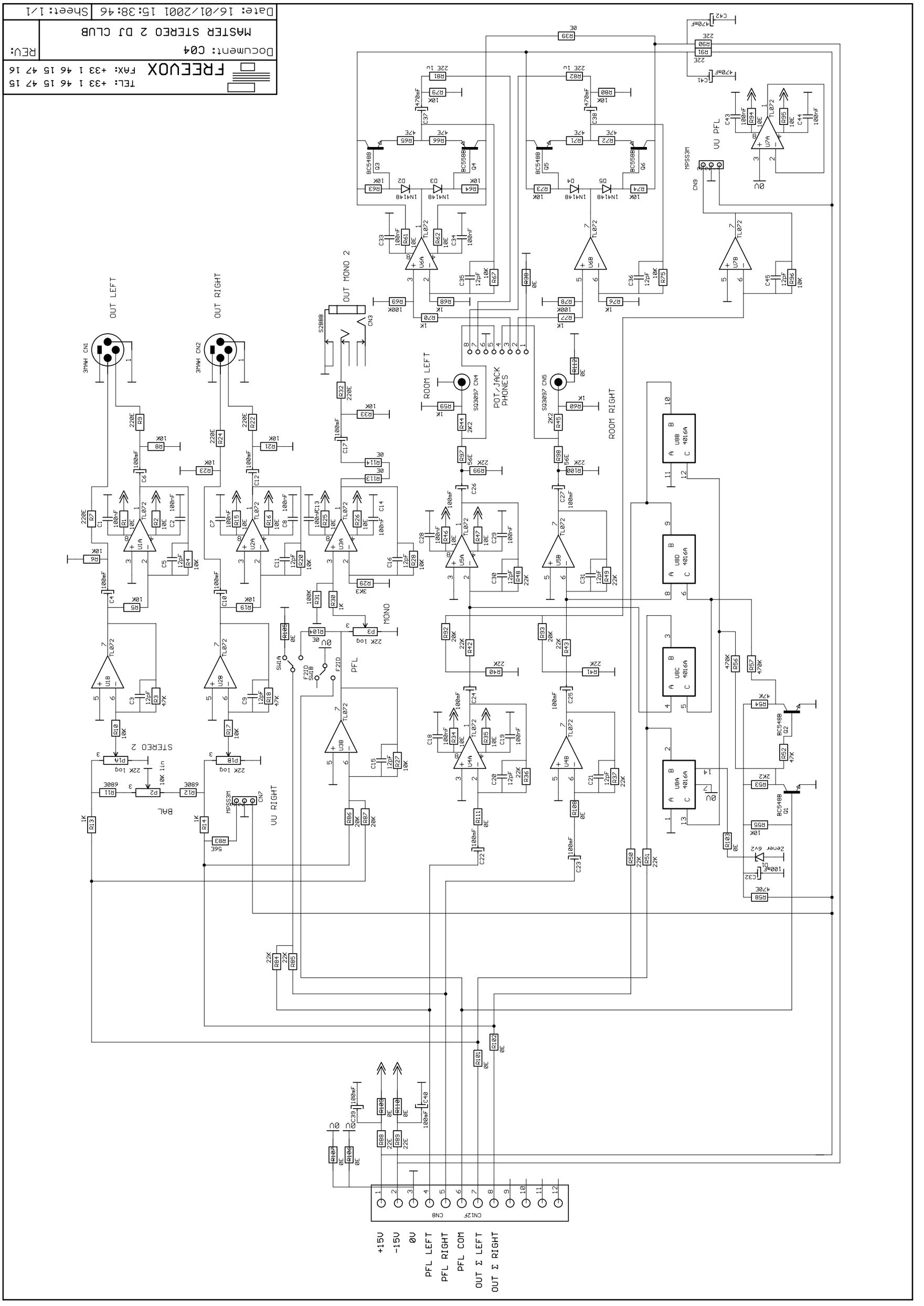
FREEVOX
TEL: +33 1 46 15 47 15
FAX: +33 1 46 15 47 16
Document: C04
MASTER STEREO 2 DJ CLUB
REV:
Date: 16/01/2001 15:38:46
Sheet: 1/1
OUT LEFT
OUT RIGHT
OUT MONO 2
ROOM LEFT
ROOM RIGHT
POT/JACK PHONES
VU PFL
VU RIGHT
STEREO 2
BAL
PFL
MONO
+15V
-15V
0V
PFL LEFT
PFL RIGHT
PFL COM
OUT Σ LEFT
OUT Σ RIGHT

**** FOR DJ CLUB ****

LAYOUT TO SHOW COMPONENT ALLOCATION
MASTER STEREO 2
* BOARD ref: C04
* SCHEMA ref: C04

FACE MARQUAGE- CI-C04 FREEVOX
CSI 01 46 15 47 15

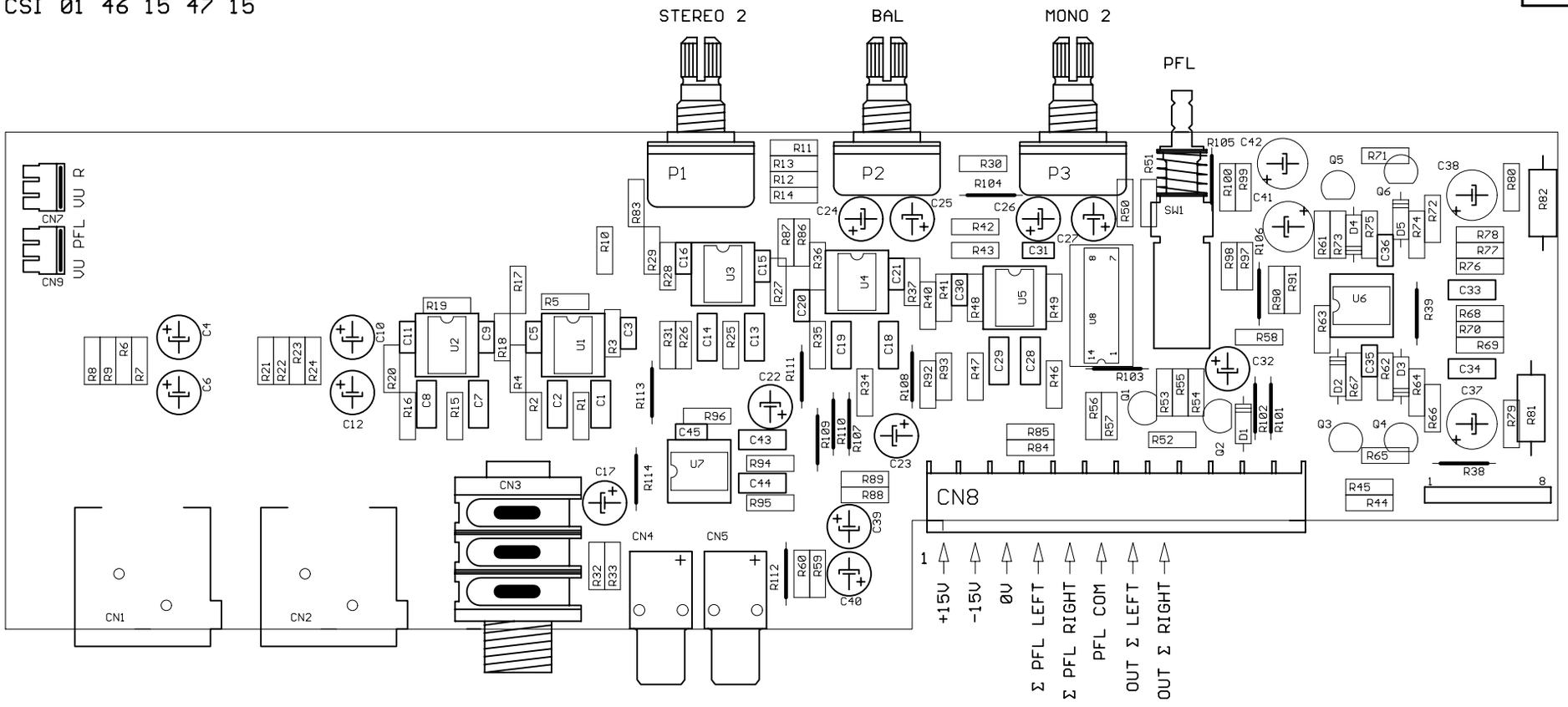

FREEVOX
TEL: 01 46 15 47 15
FAX: 01 46 15 47 16

Drawing: C04
Last modified: 18/05/2001 14:11:38
Plot date: 18/05/2001 14:11:56

FREEVOX
TEL: +33 1 46 15 47 15
FAX: +33 1 46 15 47 16

Document: C05
MASTER EFFECT/DISCO SOUND
DJ CLUB

REV:

Date: 16/01/2001 14:10:58 Sheet: 1/1

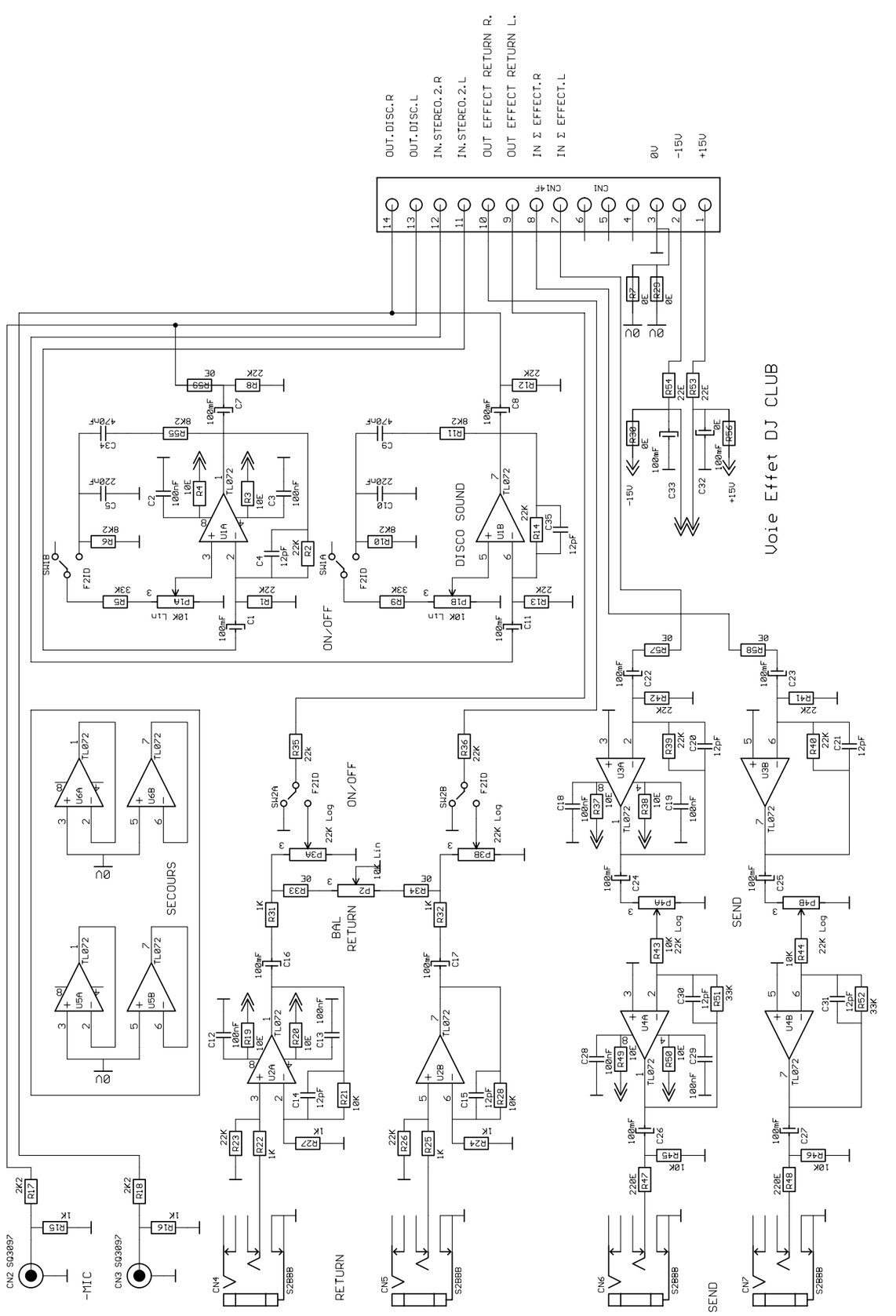

**** FOR DJ CLUB ****

LAYOUT TO SHOW COMPONENT ALLOCATION
MASTER EFFECT / DISCO SOUND
* BOARD ref: C05
* SCHEMA ref: C05

FACE MARQUAGE- CI-C05 FREEVOX
CSI 01 46 15 47 15

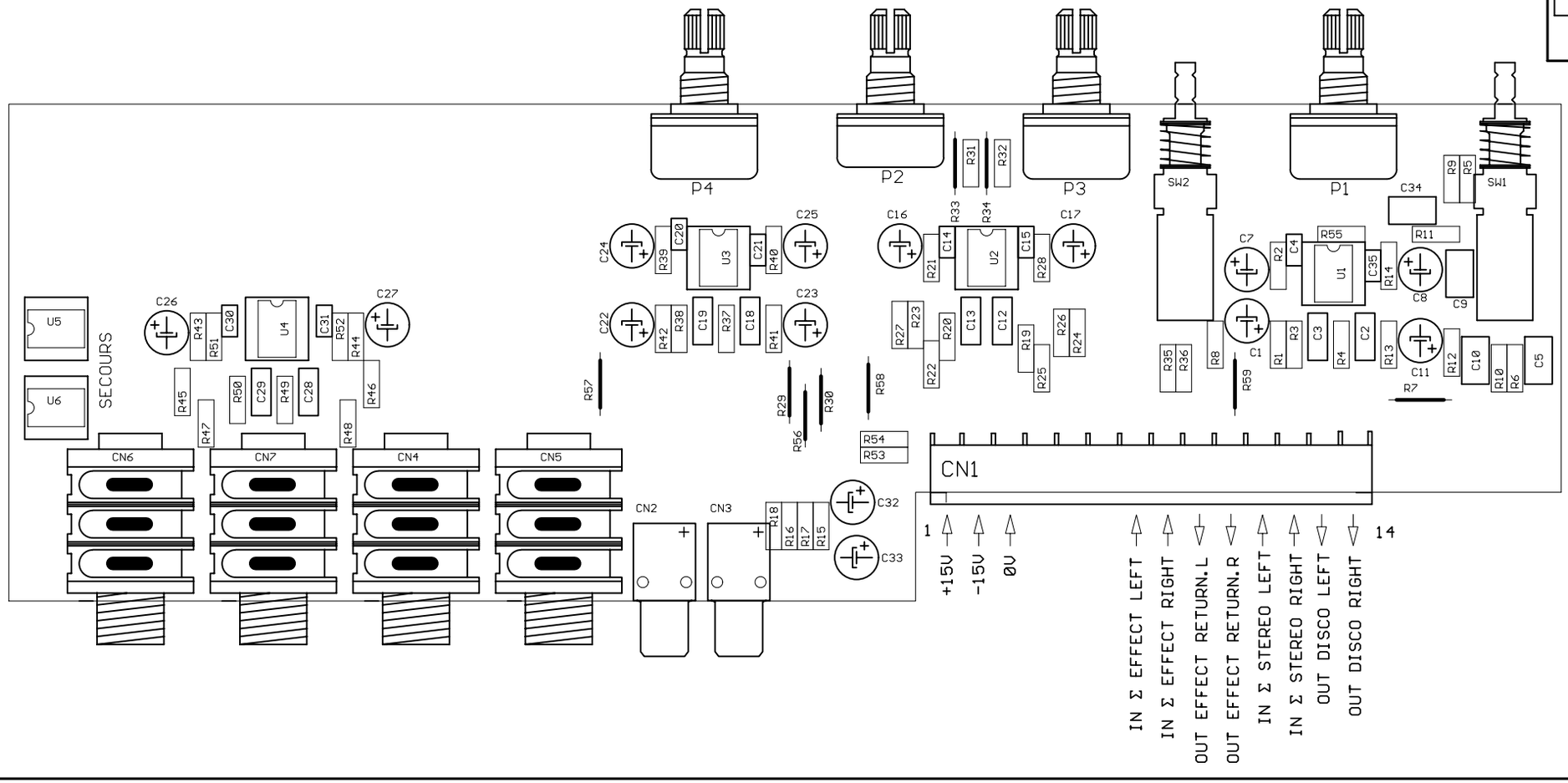

FREEVOX
TEL: 01 46 15 47 15
FAX: 01 46 15 47 16

Drawing: C05
Last modified: 18/05/2001 14:17:06
Plot date: 18/05/2001 14:17:36

FREEVOX
TEL: 01 46 15 47 15
FAX: 01 46 15 47 16

Drawing: C06
Last modified: 08/03/2001 11:04:26
Plot date: 18/05/2001 14:20:49

FACE MARQUAGE- CI-C06 FREEVOX
CSI 01 46 15 47 15

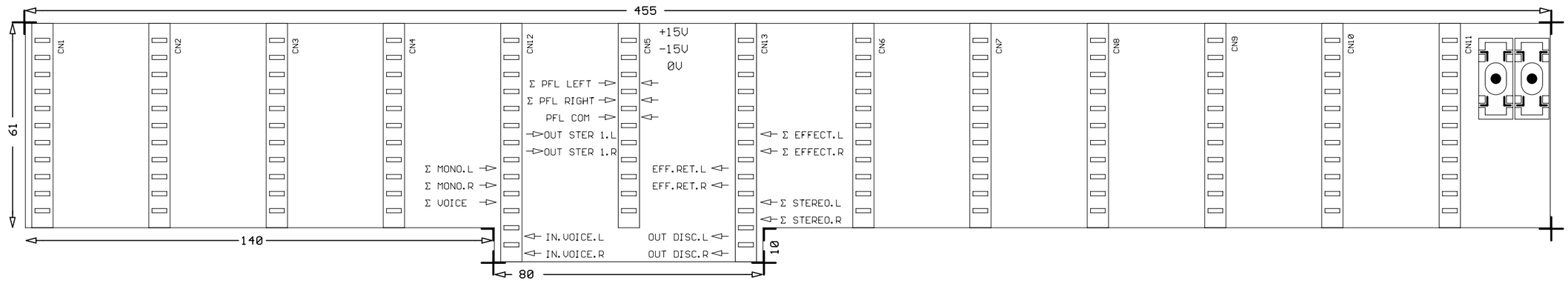

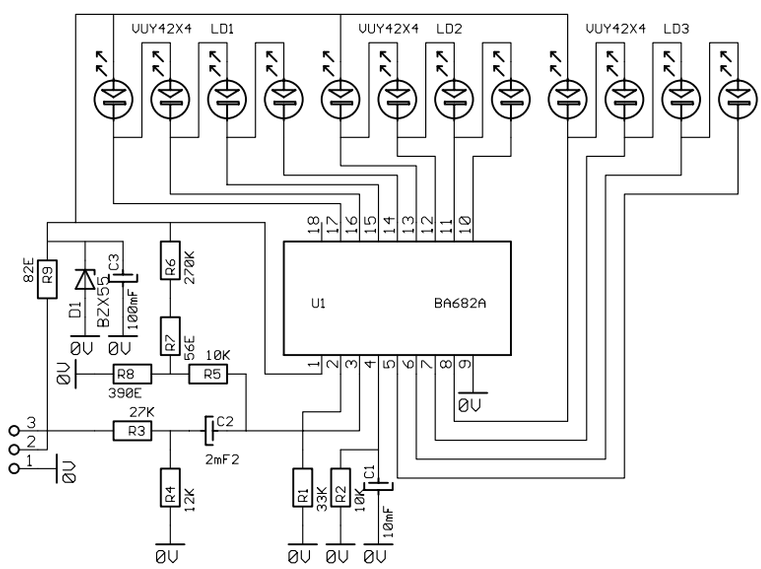

FREEVOX
TEL: 01 46 15 47 15
FAX: 01 46 15 47 16

Document: FR_VU

VU METER DJ7/DJ CLUB/ DJ4

REV:

Date: 29/01/2001 15:55:36

Sheet: 1/1

FACE MARQUAGE- CI- FR_VU FREEVOX
CSI 01 46 15 47 15

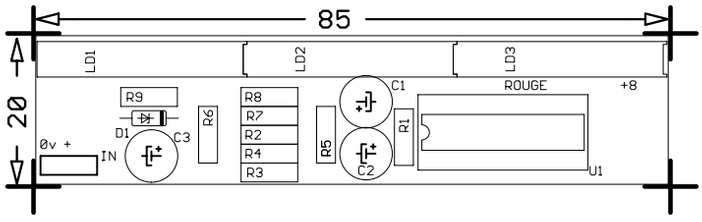

FREEVOX
TEL: 01 46 15 47 15
FAX: 01 46 15 47 16

Drawing:	FR_VU
Last modified:	17/05/2001 10:11:42
Plot date:	17/05/2001 11:01:04

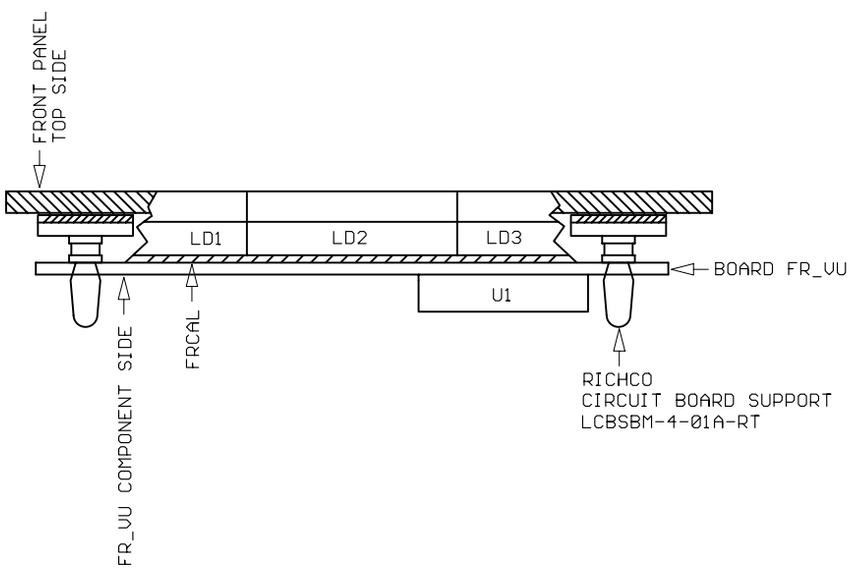

FREEVOX
TEL: 01 46 15 47 15
FAX: 01 46 15 47 16

Drawing:	VUMONT_A
Last modified:	01/02/2001 11:34:20
Plot date:	17/05/2001 11:01:53

FREEVOX
TEL: 01 46 15 47 15
FAX: 01 46 15 47 16

Document: PSU15B

REV:

Sheet: 1/1

Date: 17/05/2001 10:28:00

