BOARD C01 SCHEMA C01CL | BOARD C01 SCHEMA C01CL | BOARD C02 SCHEMA : C02CL_ML | BOARD C02 SCHEMA : C02CLPLM | BOARD C03 SCHEMA C03CL | BOARD C04 SCHEMA C04 | BOARD C05 SCHEMA C05 | BOARD C02 SCHEMA : C02CLPLM | BOARD C02 SCHEMA : C02CLPLM | BOARD C02 SCHEMA : C02CL_LL | BOARD C02 SCHEMA : C02CL_LL | BOARD C02 SCHEMA : C02CL_LL | BOARD C02 SCHEMA : C02CL_LL

KNOB REAN P670-0A-D Black body /Red pointer

KNOB REAN P120-0-33 Black body

KNOB REAN P670-0F-D Black body/White pointer

KNOB REAN P670-0F-D Black body/White pointer

KNOB REAN P670-0F-D Black body/White pointer

KNOB REAN P670-0D-D Black body/Blue pointer

KNOB REAN P120-0-33 Black body

KNOB REAN P120-A-33 Red body

KNOB REAN P120-0-33 Black body

KNOB REAN P778-F0-KL White body/Black pointer

DJ Club

MONO INPUT | MONO INPUT | STEREO INPUT | STEREO INPUT | STEREO INPUT | STEREO INPUT | STEREO INPUT | STEREO INPUT | STEREO INPUT | STEREO INPUT

GAIN — MIN — MAX

MIC / LINE | MIC / LINE | LINE / MIC | CD PHONO / MIC | CD PHONO / MIC | LINE 1 / LINE 2 | LINE 1 / LINE 2 | LINE 1 / LINE 2 | LINE 1 / LINE 2

EQUALIZER — HI — MID — LO

EFFECT

PRE / POST

PFL

INSERT

VOICE OVER

START

DJ1 | DJ2 | 1 | 2 | 3 | 4 | 5 | 6 | 7 | 8

+6 — 0dB — -6 — 12 — 20 — 30

LEFT — RIGHT — PFL

8 — 5 — 3 — 1 — 0dB — 1 — 3 — 5 — 7 — 10 — 15 — 20

MASTERS

STEREO 1 — STEREO 2 — EFFECT SEND

LEFT / RIGHT

MONO 1 — MONO 2 — EFFECT RETURN

PFL — PFL — ON

VOICE OVER — TIME — LIMIT

FREEVOX

DISCOSOUND — ON

2 — 3 — CROSS FADE

KNOB CLIFF CS2 Black body/White pointer

ON — V+ — V-

PHONES

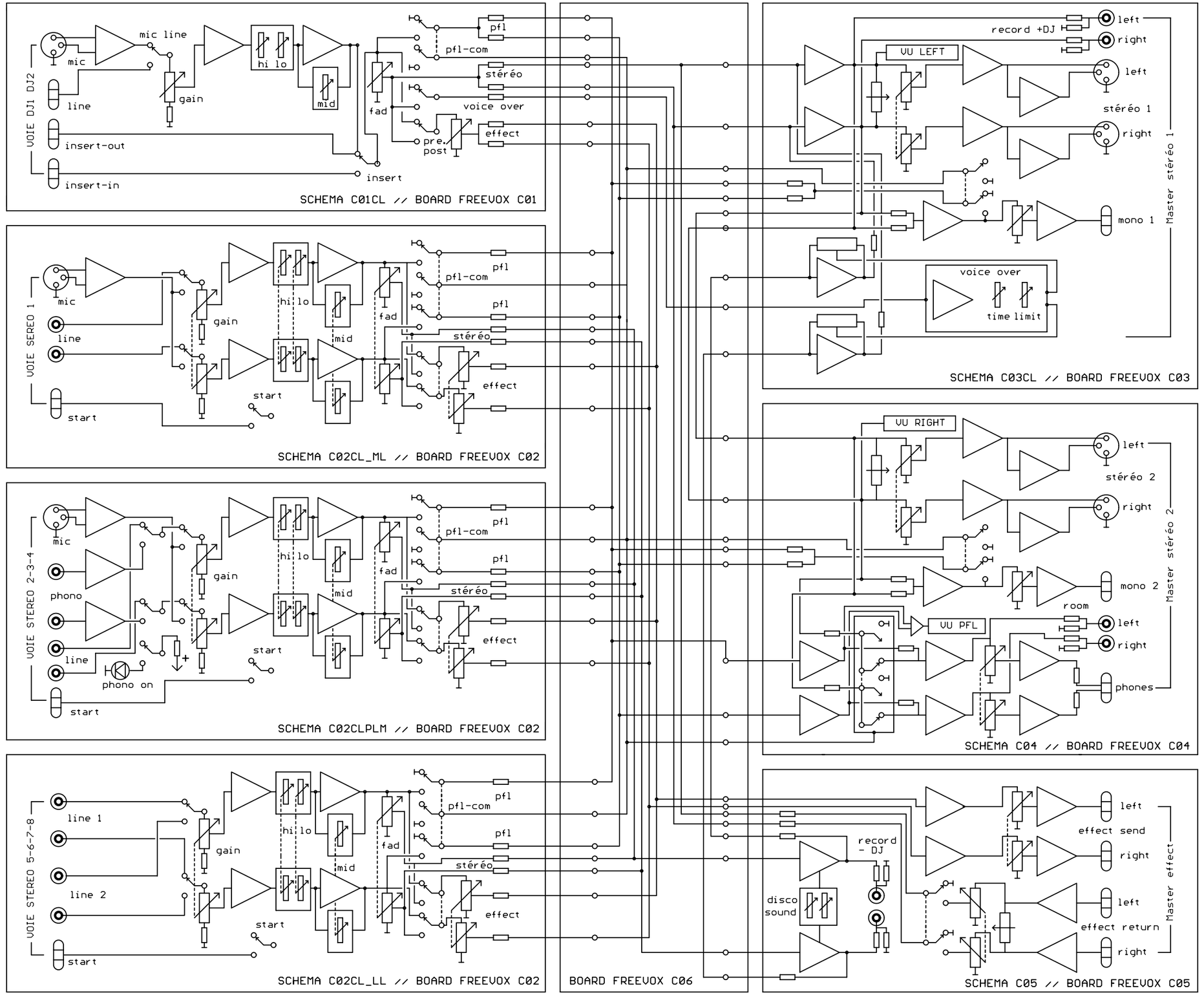

SYNOPTIQUE DJ CLUB

FREEVOX
TEL: 01 46 15 47 15
FAX: 01 46 15 47 16

Drawing: CLUBSY
Last modified: 20/04/2001 11:31:18
Plot date: 18/05/2001 12:10:15

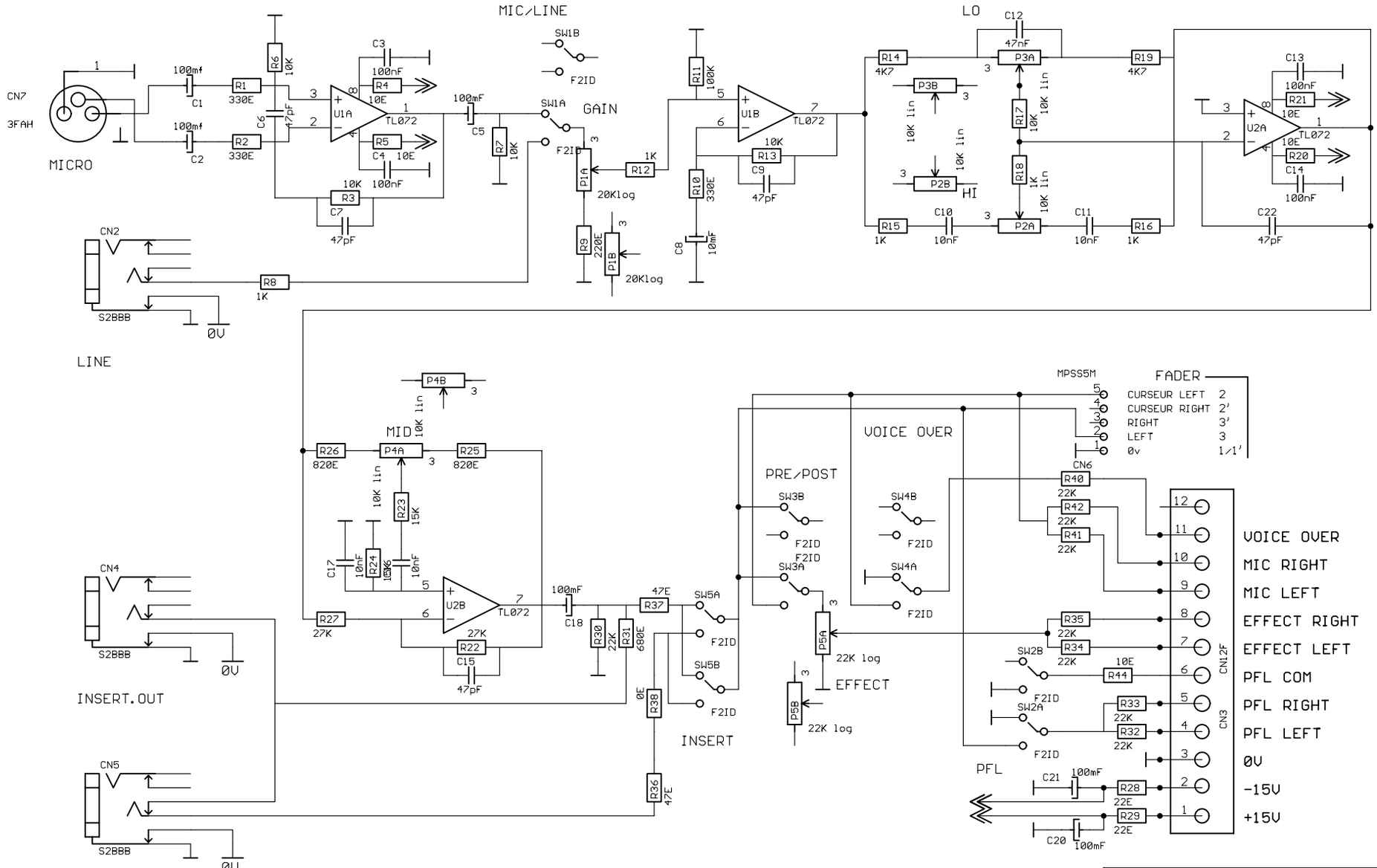

FREEVOX

TEL: +33 1 46 15 47 15
FAX: +33 1 46 15 47 16

Document: C01CL

REV:

VOIE MICRO/LINE DJ CLUB

Date: 28/02/2001 08:55:28

Sheet: 1/1

**** FOR DJ CLUB ****

LAYOUT TO SHOW COMPONENT ALLOCATION
MONO INPUT DJ1-DJ2 MICRO/LINE
* BOARD ref: C01
* SCHEMA ref: C01CL

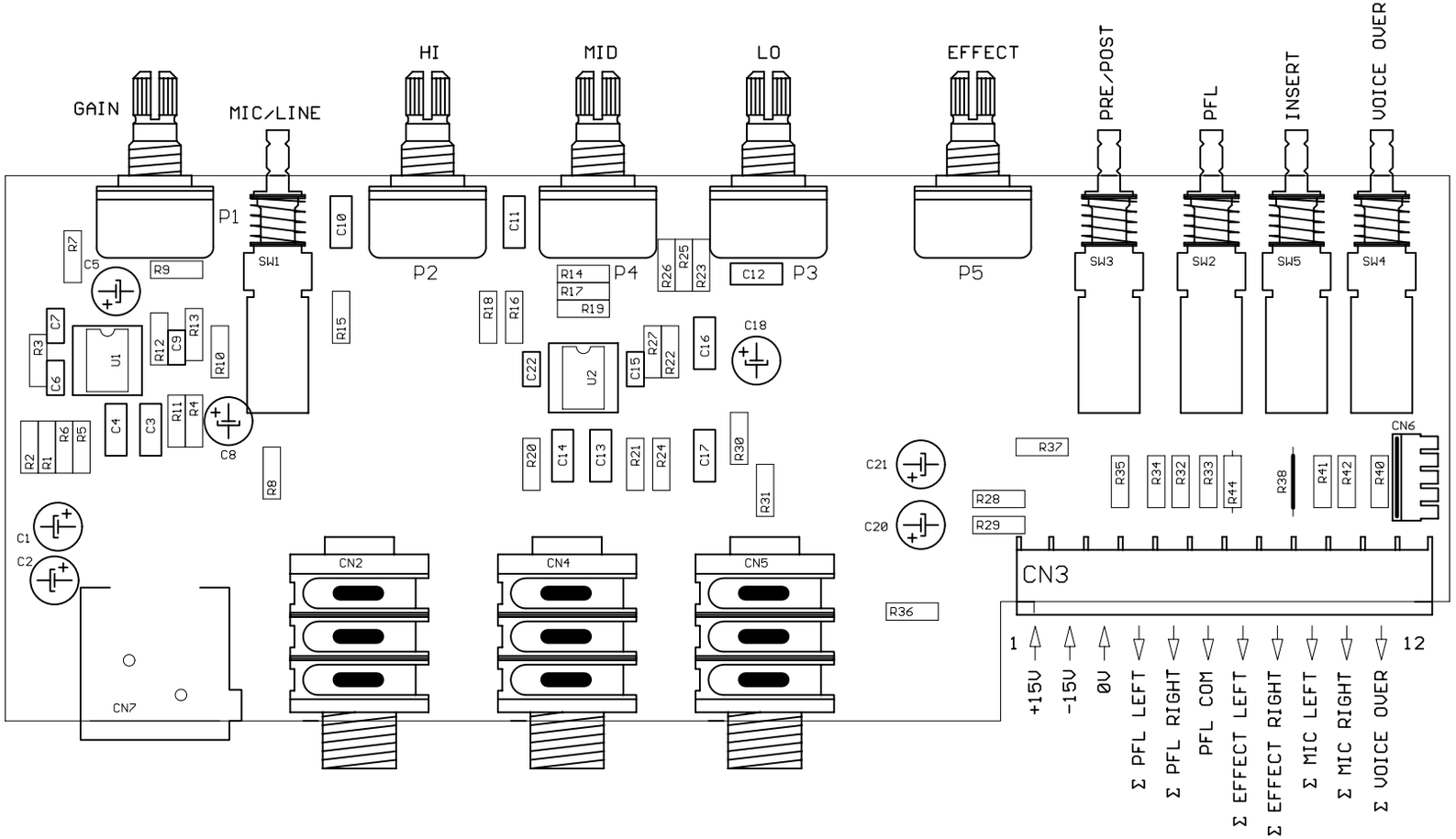

FREEVOX
TEL: 01 46 15 47 15
FAX: 01 46 15 47 16

Drawing: C01CL
Last modified: 06/03/2001 08:27:52
Plot date: 18/05/2001 12:13:36

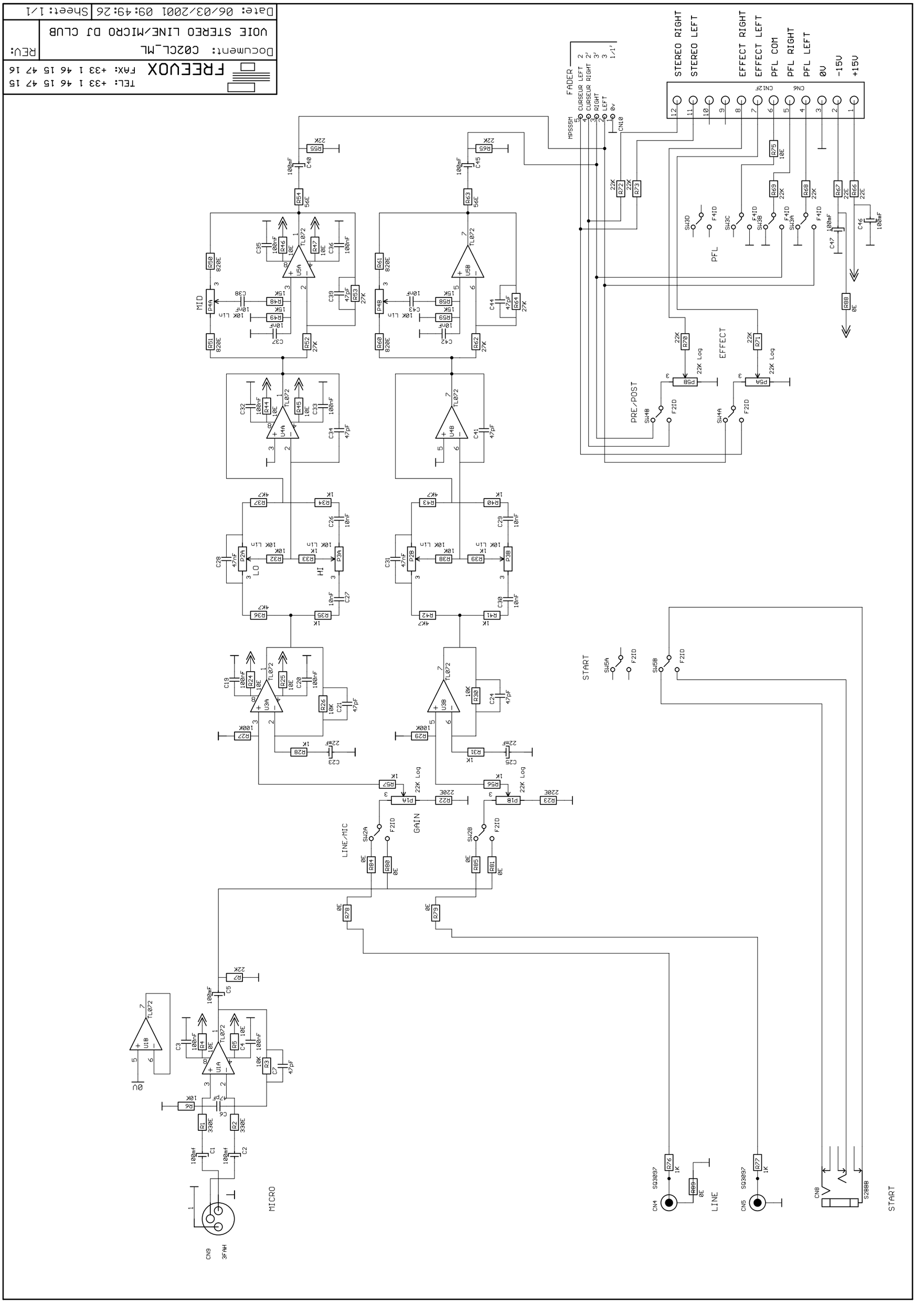
FREEVOX
TEL: +33 1 46 15 47 15
FAX: +33 1 46 15 47 16
Document: C02CL_ML
VOIE STEREO LINE/MICRO DJ CLUB
REV:
Date: 06/03/2001 09:49:26
Sheet: 1/1
STEREO RIGHT
STEREO LEFT
EFFECT RIGHT
EFFECT LEFT
PFL COM
PFL RIGHT
PFL LEFT
0V
-15V
+15V
FADER
CURSEUR LEFT
CURSEUR RIGHT
RIGHT
LEFT
PFL
EFFECT
PRE/POST
MID
LO
HI
GAIN
LINE/MIC
START
MICRO
LINE
START

**** FOR DJ CLUB ****

LAYOUT TO SHOW COMPONENT ALLOCATION
STEREO INPUT 1 LINE/MICRO
* BOARD ref: C02
* SCHEMA ref: C02CL_ML

FREEVOX
TEL: 01 46 15 47 15
FAX: 01 46 15 47 16

Drawing: C02CL_ML
Last modified: 06/03/2001 09:29:36
Plot date: 18/05/2001 12:17:30

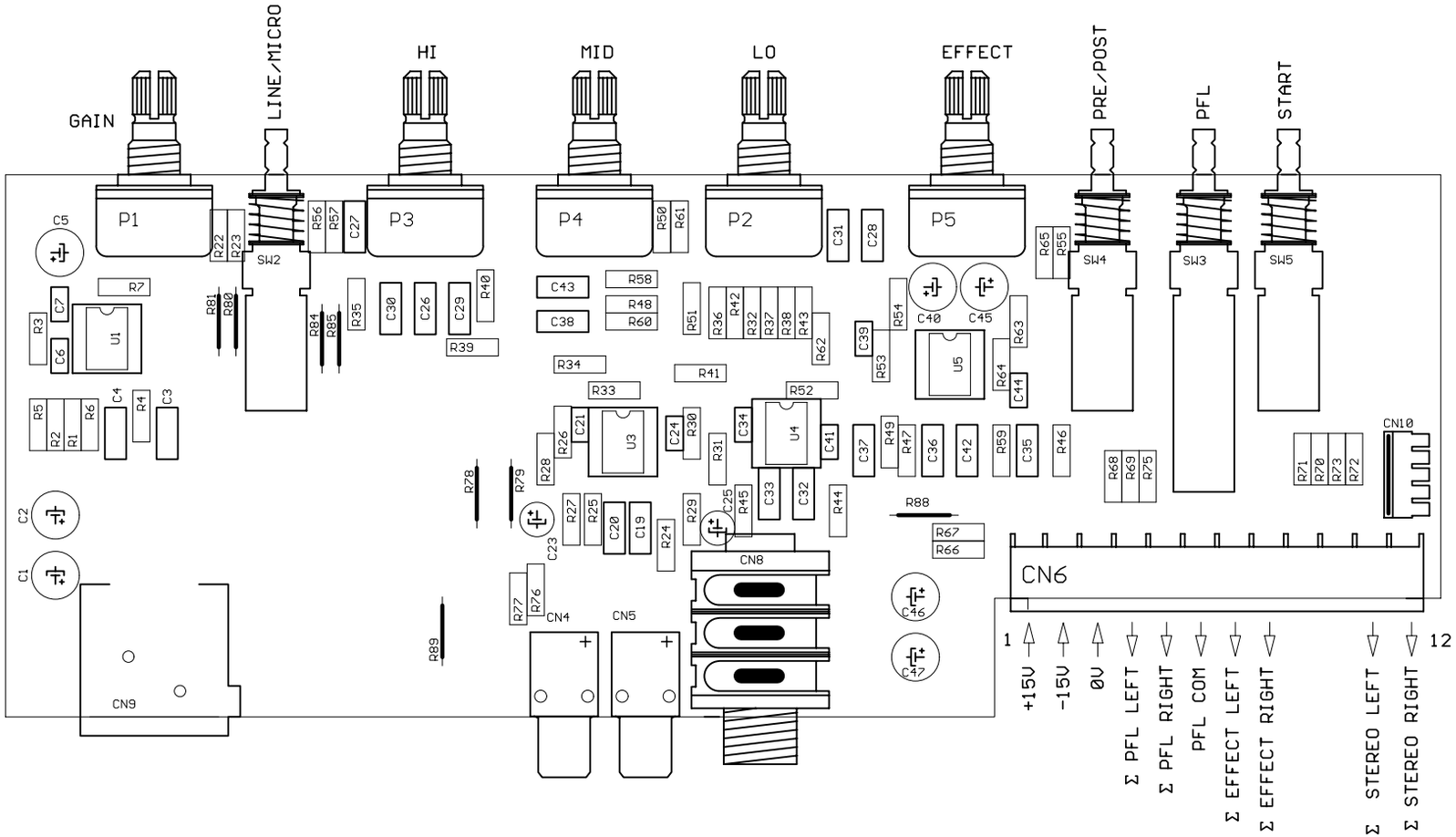

FADER
2 CURSEUR LEFT
2' CURSEUR RIGHT
3' RIGHT
3 LEFT
1/1' 0v

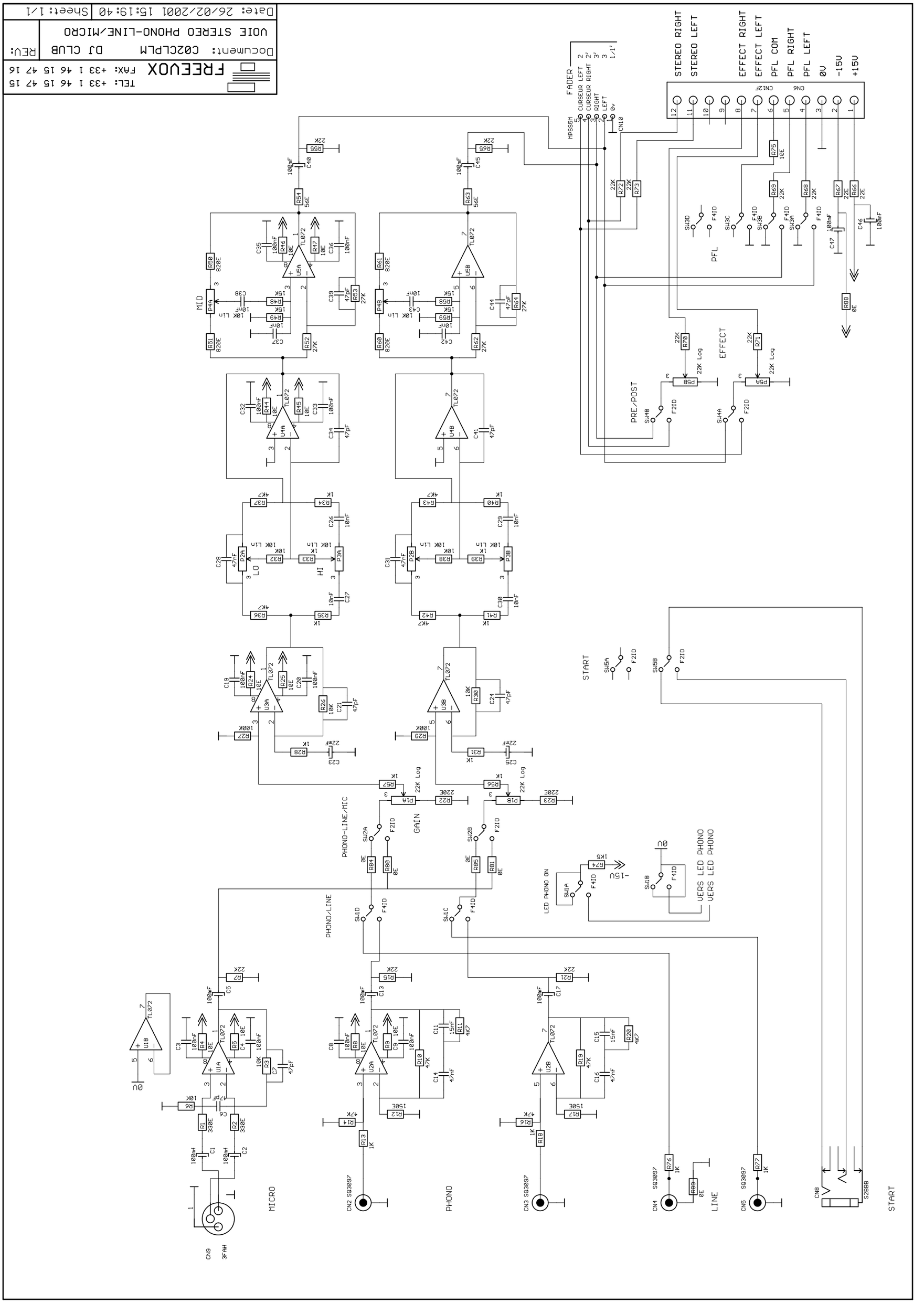
FREEVOX
TEL: +33 1 46 15 47 15
FAX: +33 1 46 15 47 16
Document: C02CLPLM
DJ CLUB
VOIE STEREO PHONO-LINE/MICRO
REV:
Date: 26/02/2001 15:19:40
Sheet: 1/1
STEREO RIGHT
STEREO LEFT
EFFECT RIGHT
EFFECT LEFT
PFL COM
PFL RIGHT
PFL LEFT
0V
-15V
+15V
FADER
CURSEUR LEFT
CURSEUR RIGHT
RIGHT
LEFT
PFL
EFFECT
PRE/POST
START
MID
LO
HI
GAIN
PHONO-LINE/MIC
PHONO/LINE
LED PHONO ON
VERS LED PHONO
MICRO
PHONO
LINE
START

**** FOR DJ CLUB ****

LAYOUT TO SHOW COMPONENT ALLOCATION
STEREO INPUT 2-3-4 PHONO-LINE/MICRO
* BOARD ref: C02
* SCHEMA ref: C02CLPLM

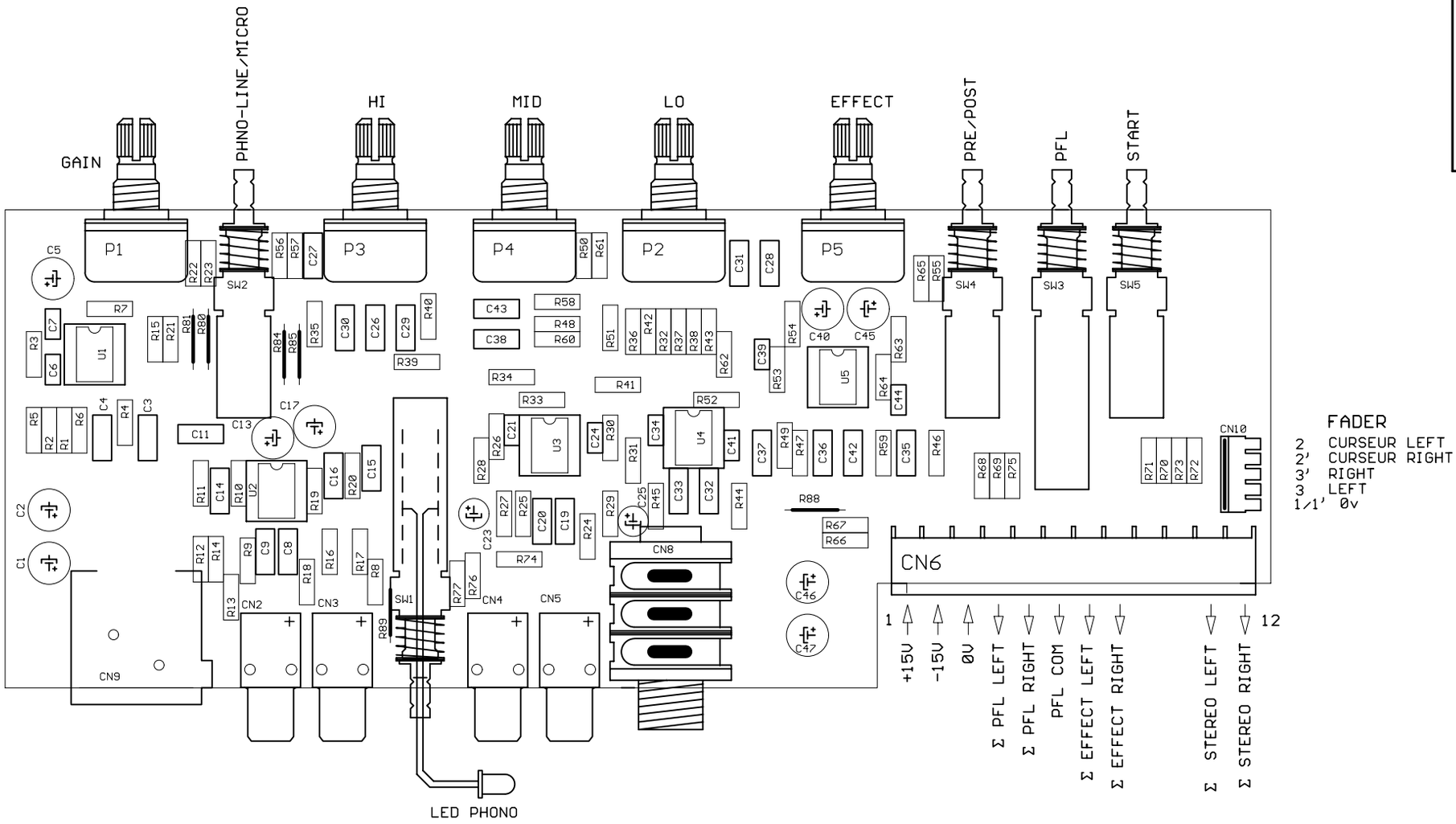

FREEVOX
TEL: 01 46 15 47 15
FAX: 01 46 15 47 16

Drawing: C02CLPLM
Last modified: 28/02/2001 08:44:20
Plot date: 18/05/2001 12:19:52

FREEVOX
TEL: +33 1 46 15 47 15
FAX: +33 1 46 15 47 16

Document: C02CL_LL
VOIE STEREO LINE1/LINE2 DJ CLUB
REV:

Date: 26/02/2001 15:16:04 Sheet: 1/1

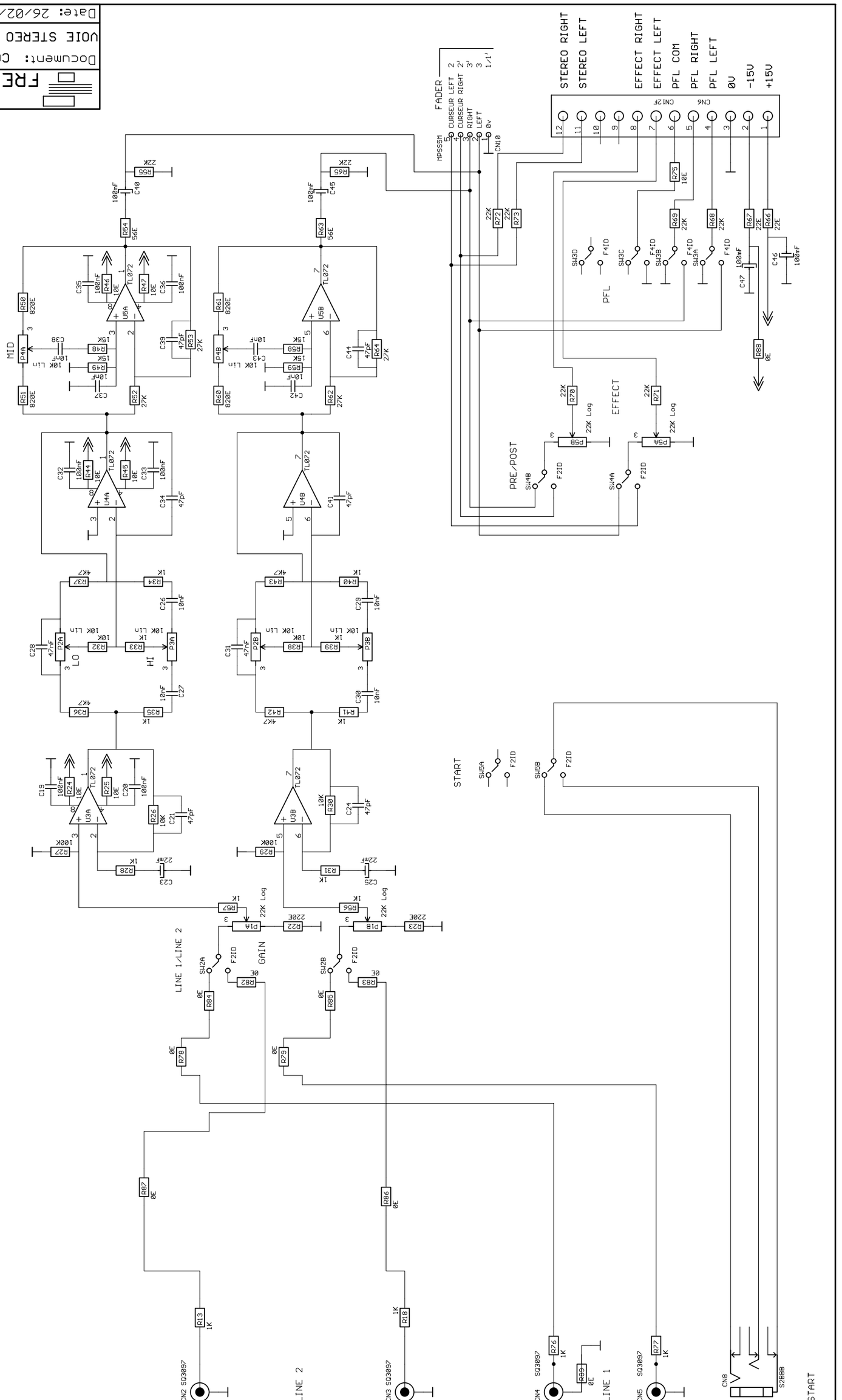

**** FOR DJ CLUB ****

LAYOUT TO SHOW COMPONENT ALLOCATION
STEREO INPUT 5-6-7-8 LINE1/LINE2
* BOARD ref: C02
* SCHEMA ref: C02CL_LL

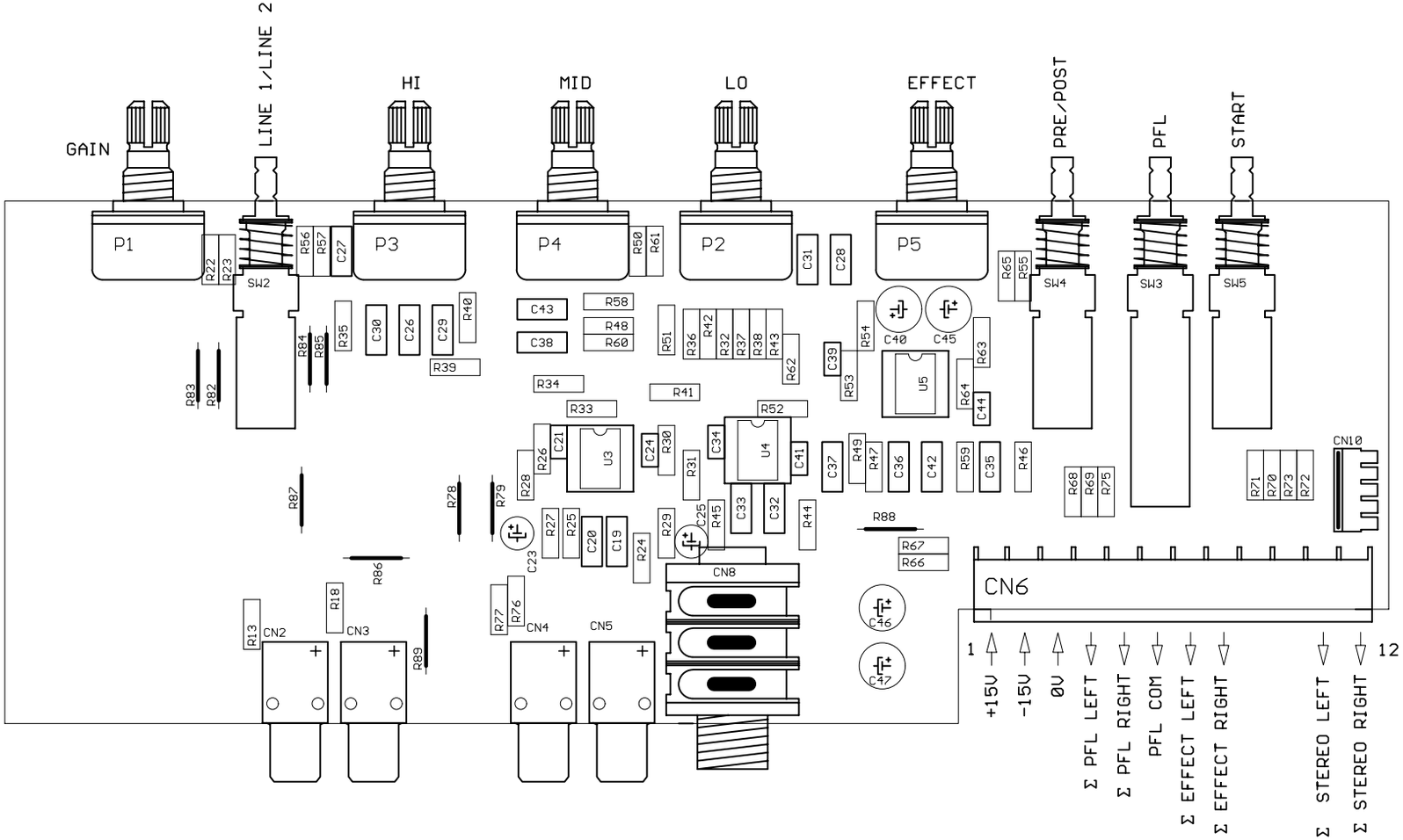

FREEVOX
TEL: 01 46 15 47 15
FAX: 01 46 15 47 16

Drawing: C02CL_LL
Last modified: 06/03/2001 11:24:30
Plot date: 18/05/2001 12:22:38

FREEVOX
TEL: +33 1 46 15 47 15
FAX: +33 1 46 15 47 16

REV:

Document: C03CL

MASTER STEREO 1 DJ CLUB

Date: 06/03/2001 16:47:38 Sheet: 1/1

CN5 MPSS3M

R35 56E

R84 0E — R31 2K2 — R33 1K — CN3 SQ3097 — REC+MIC

R85 0E — R32 2K2 — R34 1K — CN4 SQ3097 — REC+MIC

R90 0E

3MAH CN1 — OUT LEFT

3MAH CN2 — OUT RIGHT

U1A U1B U2A U2B U3A U3B TL072

C1 C2 C3 C4 C5 C6 C7 C8 100nF 100mF 12pF

R1 R2 R3 R4 R5 R6 R7 R8 R9 R10 10E 0E 22K 1K 680E

R82 22K — 0V

BAL — P2A 22K Log — STEREO 1

10K Lin — P1

R83 22K — 0V

P2B 22K Log — STEREO 1

R14 R24 10K — R13 R23 47K — C11 C17

R11 R12 R21 R22 10E — -15V

R15 R25 10K — C13 C20 12pF

R16 R26 220E — C9 C15 100nF — C14 C18 100mF — R20 R30 220E

R17 R27 10K — C12 C19 100mF — R18 R28 10K — R19 R29 10K

SW1B — F2ID PFL

SW1A — F2ID

R78 10E — R46 22K — R45 22K

R48 20K — R47 20K

U4A U4B TL072 — C21 100nF — R36 10E — R37 10E — -15V — C22 100nF — R38 10K — C23 12pF

MONO — P3 22K log — R40 1K — R41 100K — R42 3K3 — R43 10K — C26 12pF — R88 0E — C25 100mF — R39 220E — R44 10K

S2BBB — CN6 — MONO

CN7 CN14F

+15V 1 — R59 22E — C34 100mF — R79 0E — R80 0E — +15V — -15V

-15V 2 — R60 22E — C33 100mF

0V 3 — R81 0E

PFL LEFT 4

PFL RIGHT 5

PFL COM 6

OUT Σ LEFT 7 — R86 0E

OUT Σ RIGHT 8 — R87 0E

IN Σ MIC LEFT 9

IN Σ MIC RIGHT 10

IN Σ VOICE OVER 11

12

IN VOICE LEFT 13

IN VOICE RIGHT 14

U5A U5B TL072 — C27 C31 100nF — R49 R56 10E — C30 C32 100mF — R54 R58 22K — R53 R57 10K — R52 R55 22K — C29 12pF — R51 22K — R50 10E — 2K2 R76 R77 — P4B P4A 22K log — PH2 PH1 P873_G35 — LIMIT — R75 1K

U6A U6B TL072 — C35 100nF — R61 10E — C37 12pF — R63 22K — R62 10E — C36 100nF — C40 100mF — R89 0E — R68 10K — R64 1K — R67 4K7 — R65 3K3 — R66 10K — C38 12pF — C39 10mF — R69 10K — C41 10mF

R70 39K — BC548B Q1 — R71 10K — BC548B Q3 — R72 3K3 — BC548B Q2 — R74 10K

TIME — 10K lin P5 — R73 1K — C42 100mF

**** FOR DJ CLUB ****

LAYOUT TO SHOW COMPONENT ALLOCATION
MASTER STEREO 1
* BOARD ref: C03
* SCHEMA ref: C03CL

FREEVOX
TEL: 01 46 15 47 15
FAX: 01 46 15 47 16

Drawing: C03CL
Last modified: 06/03/2001 16:58:24
Plot date: 18/05/2001 12:24:55

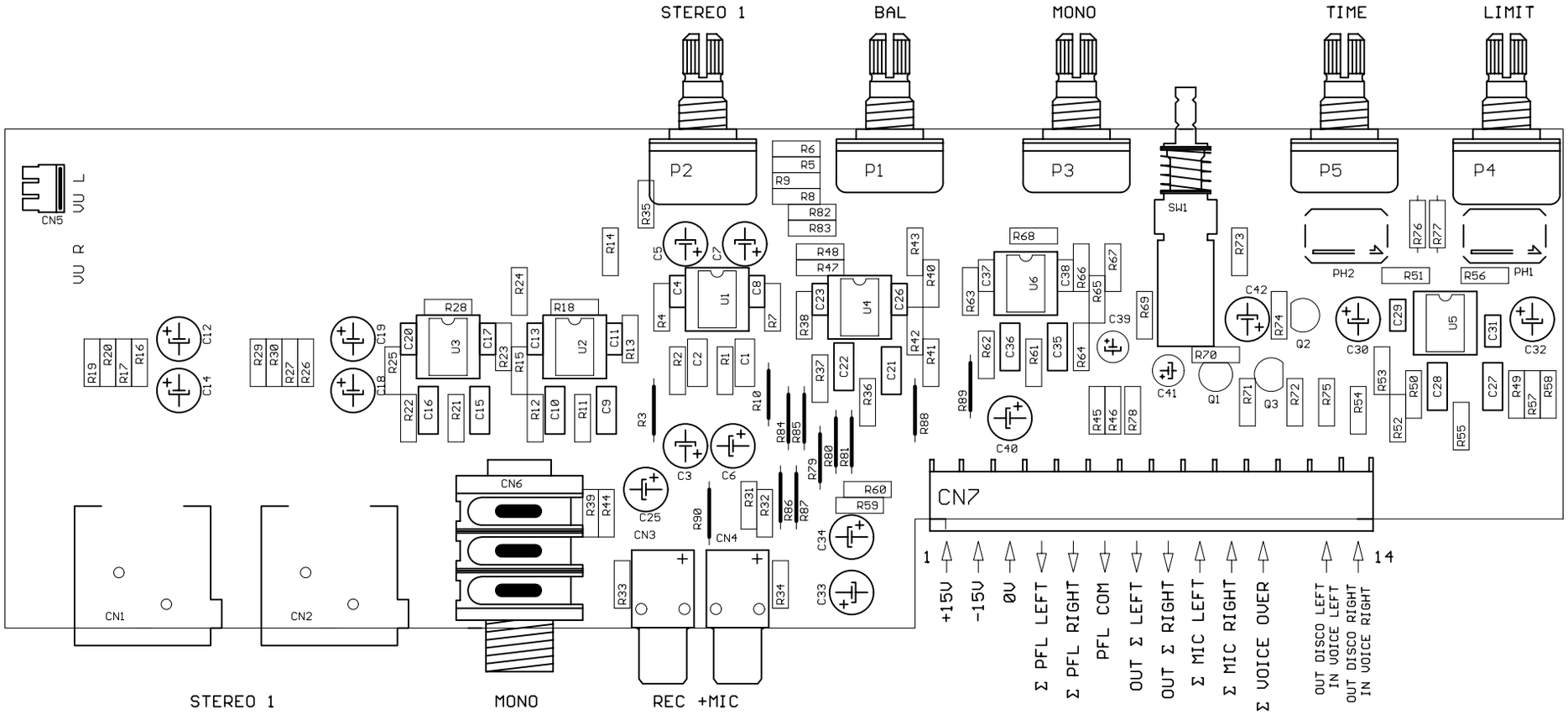

FREEVOX
TEL: +33 1 46 15 47 15
FAX: +33 1 46 15 47 16

REV:

Document: C04

MASTER STEREO 2 DJ CLUB

Date: 16/01/2001 15:38:46 | Sheet: 1/1

+15V
-15V
0V
PFL LEFT
PFL RIGHT
PFL COM
OUT Σ LEFT
OUT Σ RIGHT
CN8
CN12F
OUT LEFT
OUT RIGHT
3MAH CN1
3MAH CN2
STEREO 2
BAL
VU RIGHT
MPSS3M
CN7
PFL
MONO
F2ID
SW1A
SW1B
OUT MONO 2
CN3
ROOM LEFT
SQ3097 CN4
POT/JACK PHONES
ROOM RIGHT
SQ3097 CN5
VU PFL
CN9
TL072
4016A
BC548B
BC558B
1N4148
Zener 6v2
22K log
10K lin

**** FOR DJ CLUB ****

LAYOUT TO SHOW COMPONENT ALLOCATION
MASTER STEREO 2
* BOARD ref: C04
* SCHEMA ref: C04

FACE MARQUAGE- CI-C04 FREEVOX
CSI 01 46 15 47 15

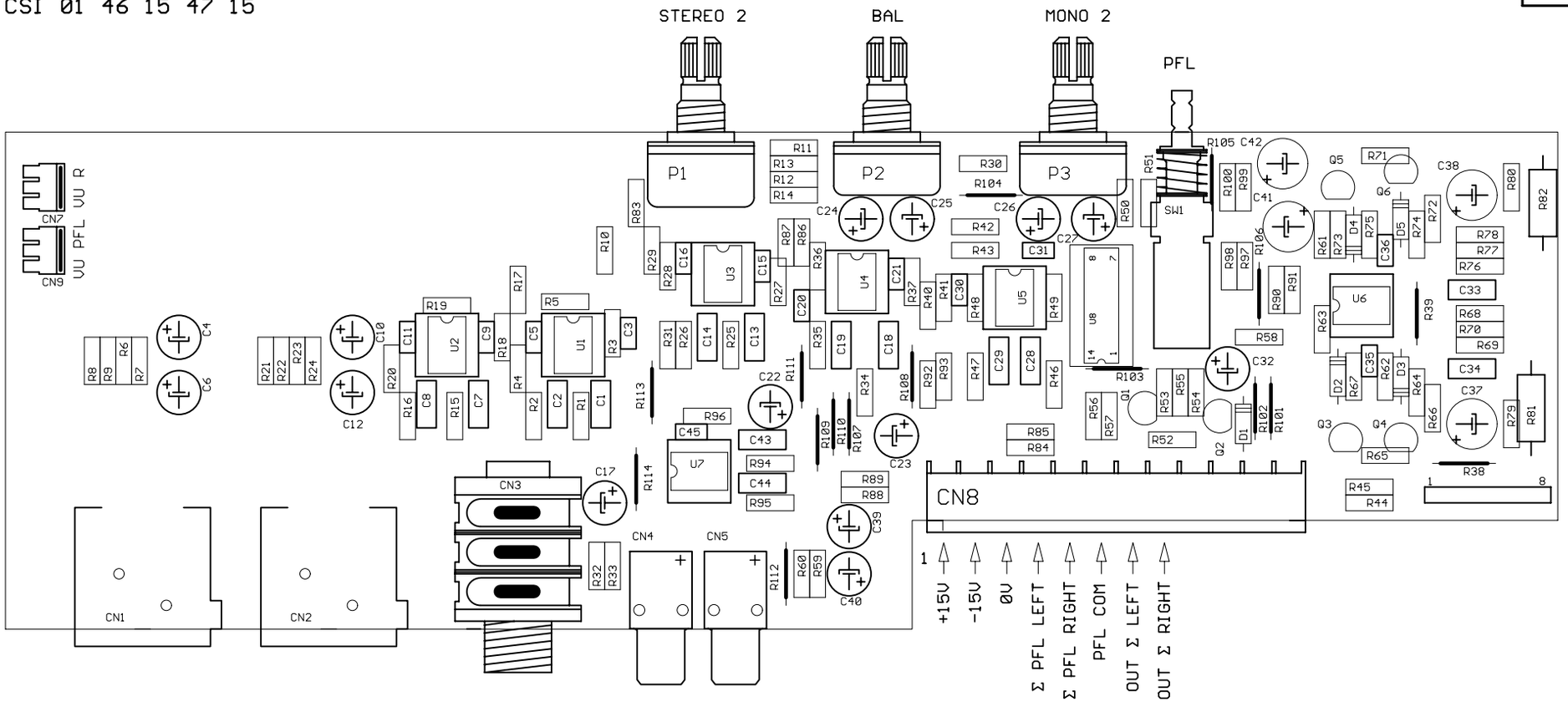

FREEVOX
TEL: 01 46 15 47 15
FAX: 01 46 15 47 16

Drawing: C04
Last modified: 18/05/2001 14:11:38
Plot date: 18/05/2001 14:11:56

FREEVOX
TEL: +33 1 46 15 47 15
FAX: +33 1 46 15 47 16

Document: C05
MASTER EFFECT/DISCO SOUND
DJ CLUB

REV:

Date: 16/01/2001 14:10:58 Sheet: 1/1

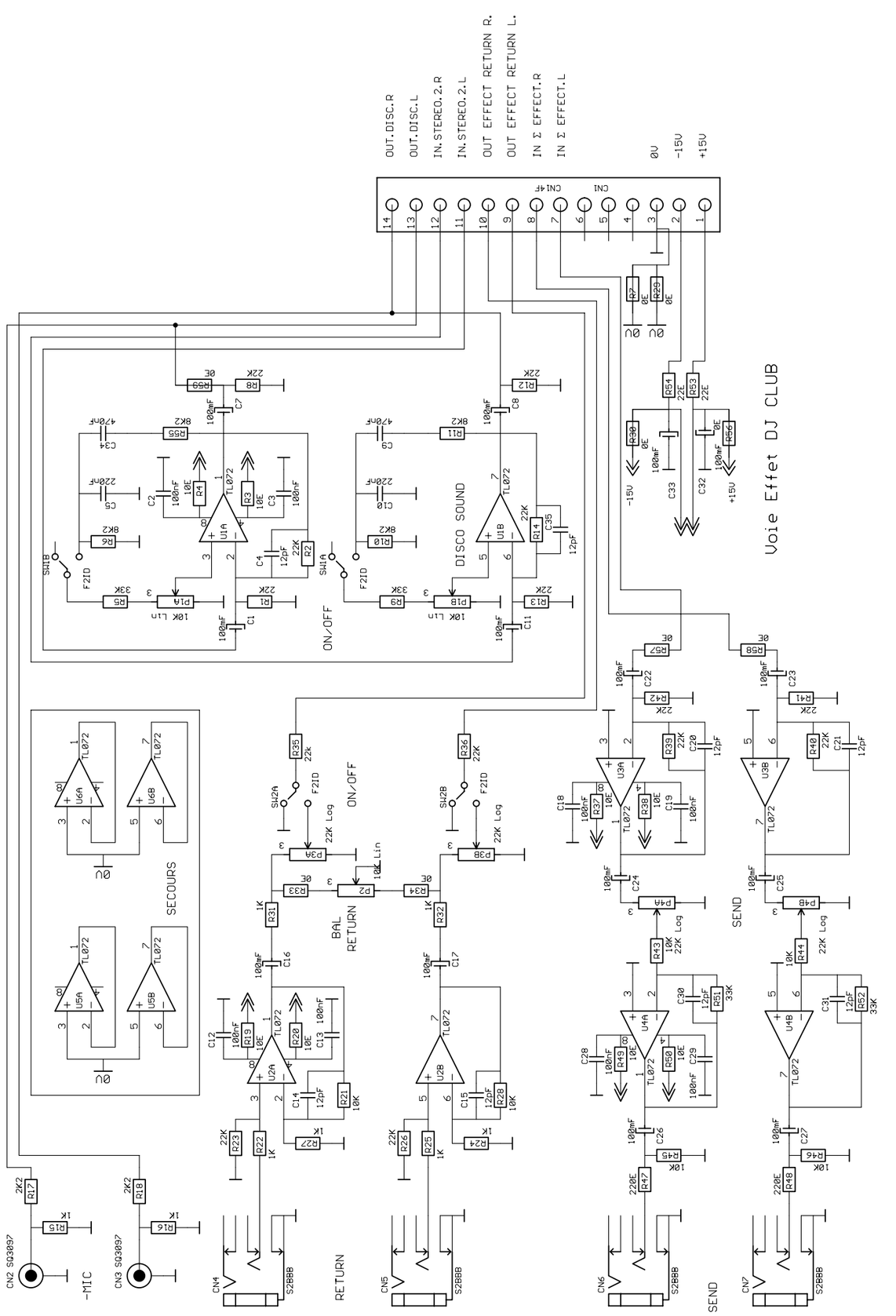

**** FOR DJ CLUB ****

LAYOUT TO SHOW COMPONENT ALLOCATION
MASTER EFFECT / DISCO SOUND
* BOARD ref: C05
* SCHEMA ref: C05

FACE MARQUAGE- CI-C05 FREEVOX
CSI 01 46 15 47 15

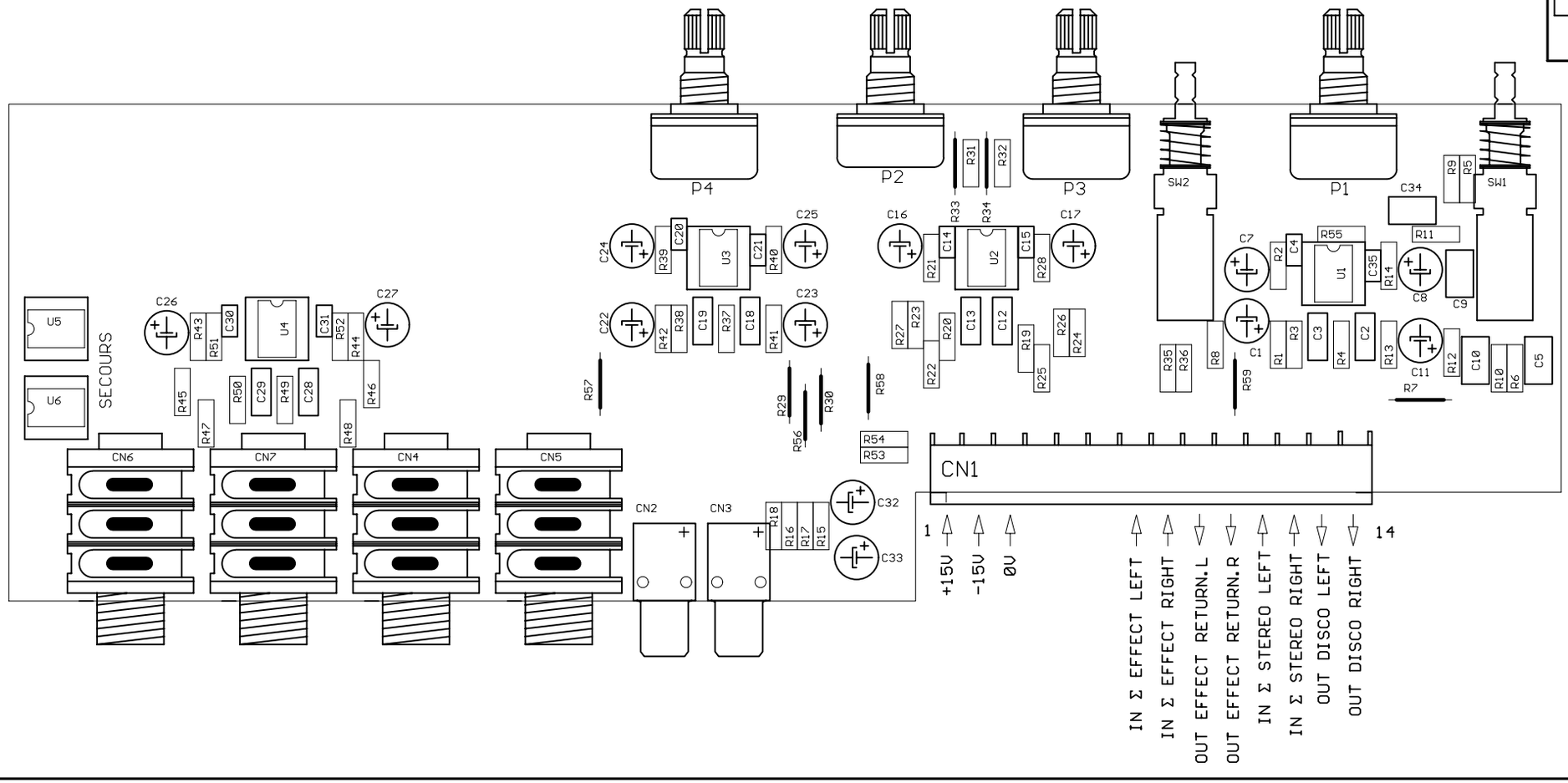

FREEVOX
TEL: 01 46 15 47 15
FAX: 01 46 15 47 16

Drawing: C05
Last modified: 18/05/2001 14:17:06
Plot date: 18/05/2001 14:17:36

FREEVOX
TEL: 01 46 15 47 15
FAX: 01 46 15 47 16

Drawing: C06
Last modified: 08/03/2001 11:04:26
Plot date: 18/05/2001 14:20:49

FACE MARQUAGE- CI-C06 FREEVOX
CSI 01 46 15 47 15

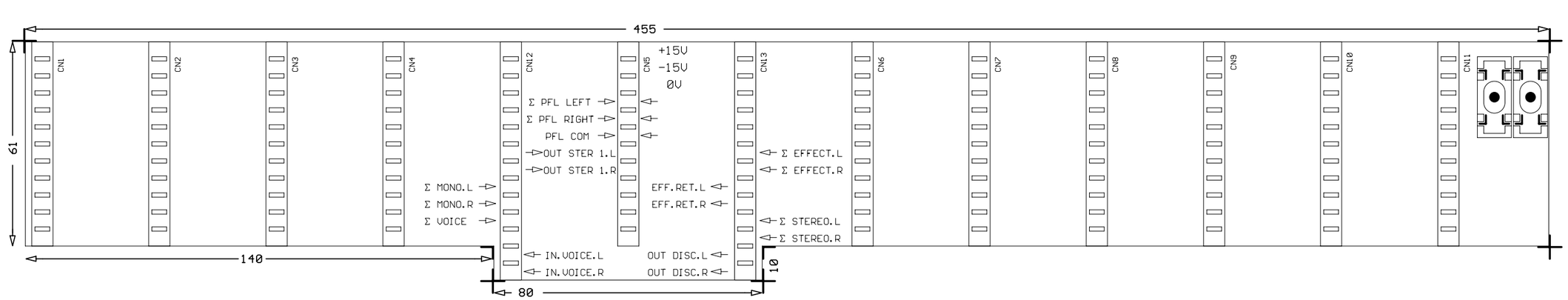

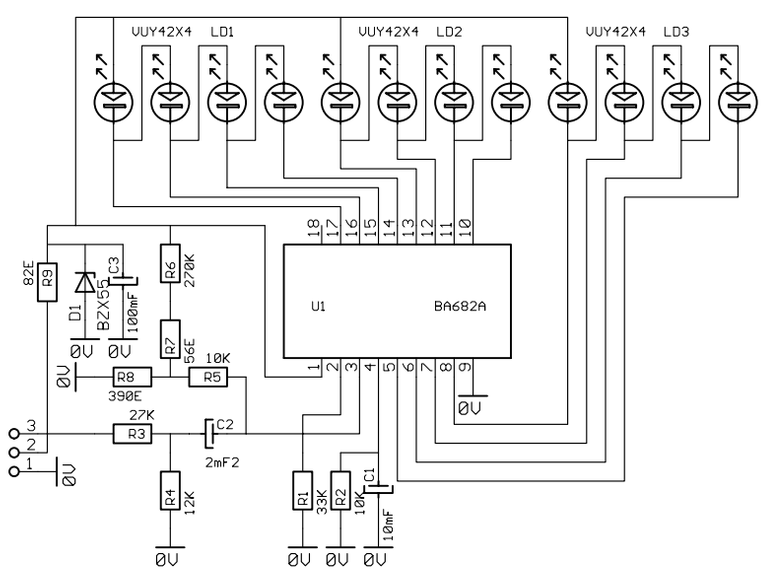

FREEVOX
TEL: 01 46 15 47 15
FAX: 01 46 15 47 16

Document: FR_VU

REV:

VU METER DJ7/DJ CLUB/ DJ4

Date: 29/01/2001 15:55:36

Sheet: 1/1

FACE MARQUAGE- CI- FR_VU FREEVOX
CSI 01 46 15 47 15

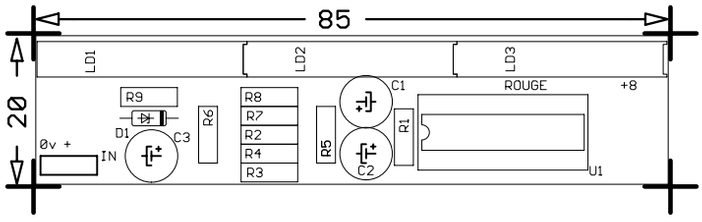

FREEVOX
TEL: 01 46 15 47 15
FAX: 01 46 15 47 16

Drawing:	FR_VU
Last modified:	17/05/2001 10:11:42
Plot date:	17/05/2001 11:01:04

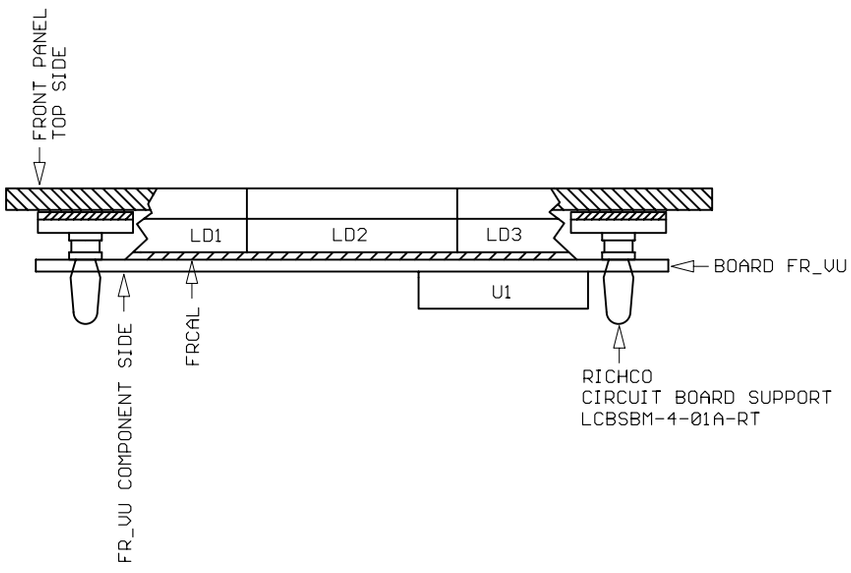

FREEVOX
TEL: 01 46 15 47 15
FAX: 01 46 15 47 16

Drawing:	VUMONT_A
Last modified:	01/02/2001 11:34:20
Plot date:	17/05/2001 11:01:53

FREEVOX
TEL: 01 46 15 47 15
FAX: 01 46 15 47 16

Document: PSU15B

REV:

Date: 17/05/2001 10:28:00
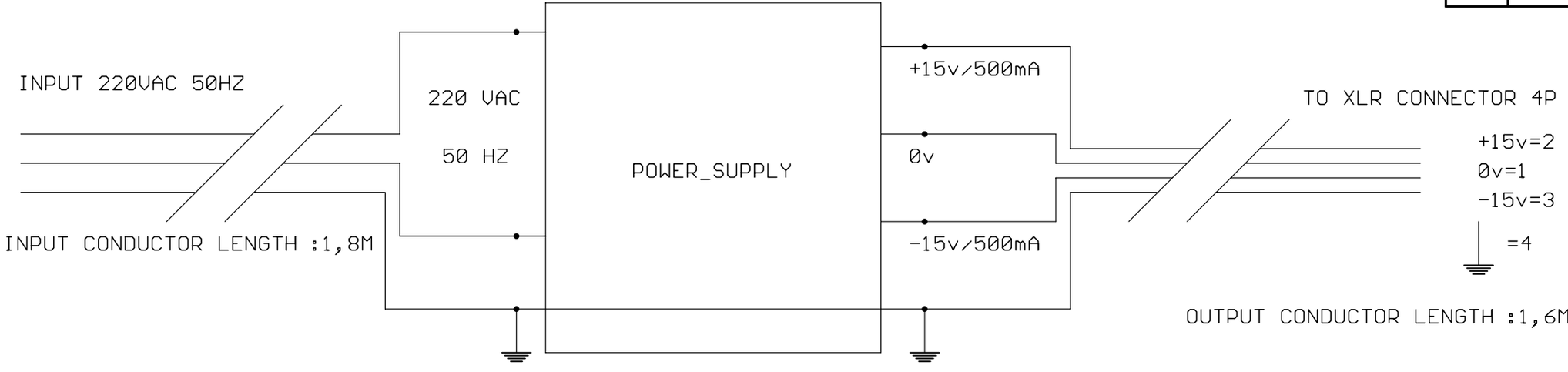
Sheet: 1/1