BOARD C01
SCHEMA C01DJ
DJ7

BOARD C01
SCHEMA C01DJ
DJ7

BOARD C02
SCHEMA C02DJ_ML
DJ7

BOARD C02
SCHEMA C02DJ_PL
DJ7

BOARD C03
SCHEMA C03DJ
DJ7

BOARD C62
SCHEMA C62DJ
DJ7

BOARD C02
SCHEMA C02DJ_PL
DJ7

BOARD C02
SCHEMA C02DJ_LL
DJ7

BOARD C02
SCHEMA C02DJ_LL
DJ7

BOARD C56
SCHEMA C56
DJ7

KNOB REAN
P670-0A-D
Black body /Red pointer

KNOB REAN
P120-0-33
Black body

KNOB REAN
P670-0F-D
Black body/White pointer

KNOB REAN
P670-0F-D
Black body/White pointer

KNOB REAN
P670-0F-D
Black body/White pointer

KNOB REAN
P670-0A-D
Black body /Red pointer

KNOB REAN
P670-0F-D
Black body/White pointer

KNOB REAN
P670-0A-D
Black body /Red pointer

KNOB REAN
P120-A-33
Red body

KNOB REAN
P120-0-33
Black body

KNOB REAN
P778-F0-KL
White body/Black pointer

KNOB REAN
P120-A-33
Red body

KNOB REAN
P670-0F-D
Black body/White pointer

KNOB REAN
P120-0-33
Black body

KNOB REAN
P670-0A-D
Black body /Red pointer

KNOB CLIFF
CS2
Black body/White pointer

DJ7

MONO INPUT
GAIN
MIN MAX
MIC LINE
EQUALIZER
HI
MID
LO
DJ1
PFL
INSERT
VOICE OVER
+6
0dB
-6
12
20
30

MONO INPUT
GAIN
MIN MAX
MIC LINE
EQUALIZER
HI
MID
LO
DJ2
PFL
INSERT
VOICE OVER
+6
0dB
-6
12
20
30

STEREO INPUT
GAIN
MIN MAX
LINE MIC
EQUALIZER
HI
MID
LO
1
PFL
START
+6
0dB
-6
12
20
30

STEREO INPUT
GAIN
MIN MAX
CD PHONO
EQUALIZER
HI
MID
LO
2
PFL
START
+6
0dB
-6
12
20
30

8
5
3
1
0dB
1
3
5
7
10
15
20
LEFT
RIGHT

MASTERS
STEREO 1
STEREO 2
LEFT RIGHT
LEFT RIGHT
MONO
PFL
DISCOSOUND
ON
VOICE OVER
TIME
LIMIT
FREEVOX

2
3
CROSS FADE

STEREO INPUT
GAIN
MIN MAX
CD PHONO
EQUALIZER
HI
MID
LO
3
PFL
START
+6
0dB
-6
12
20
30

STEREO INPUT
GAIN
MIN MAX
LINE 1 LINE 2
EQUALIZER
HI
MID
LO
4
PFL
START
+6
0dB
-6
12
20
30

STEREO INPUT
GAIN
MIN MAX
LINE 1 LINE 2
EQUALIZER
HI
MID
LO
5
PFL
START
+6
0dB
-6
12
20
30

ON
V+
V-
PHONES
SPLIT BAL
OUT PFL
ON
PHONES

KNOB REAN
P120-A-33
Red body

KNOB REAN
P670-0F-D
Black body/White pointer

KNOB REAN
P120-0-33
Black body

KNOB REAN
P670-0A-D
Black body /Red pointer

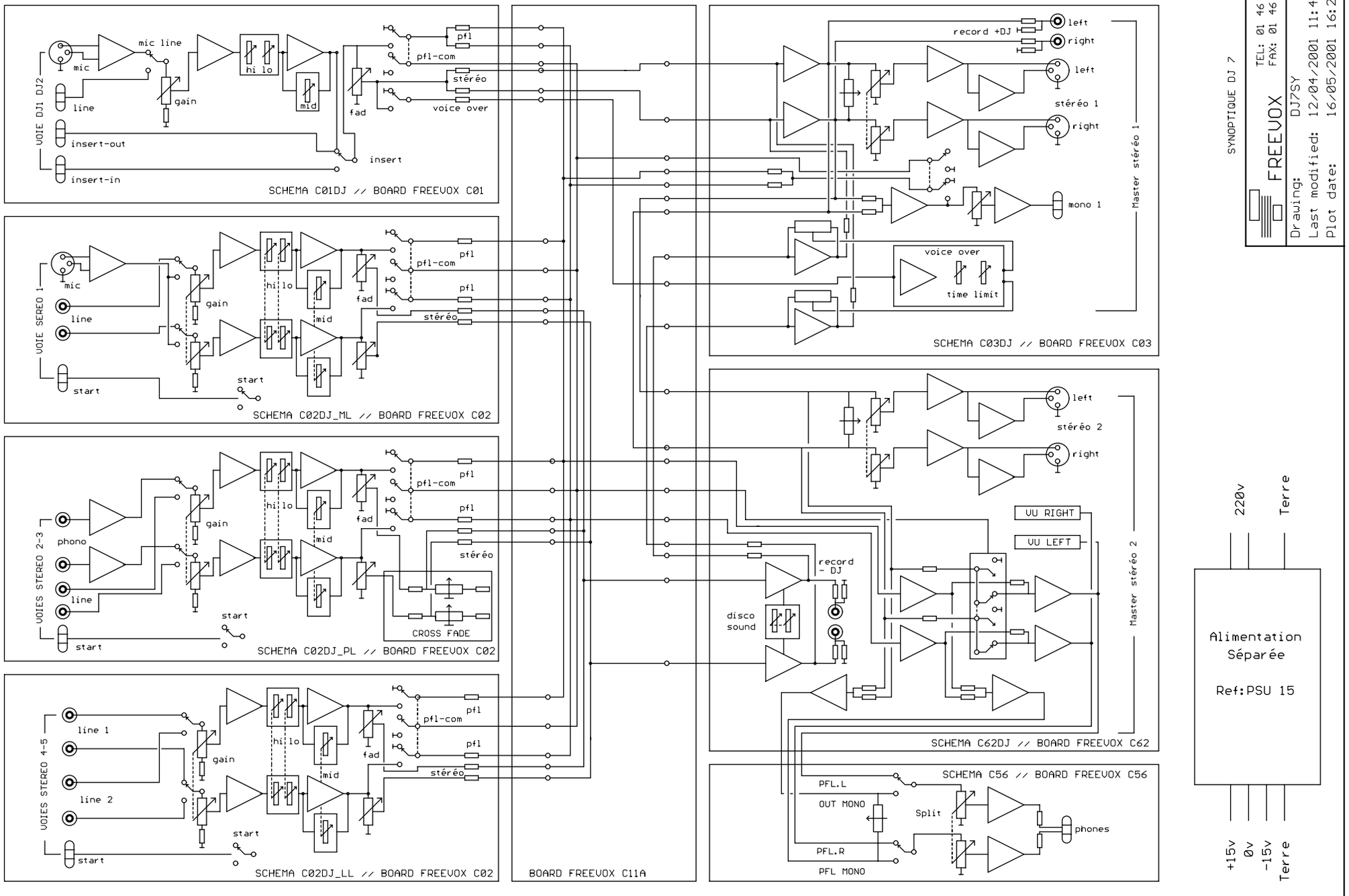
SYNOPTIQUE DJ 7
FREEVOX
TEL: 01 46 15 47 15
FAX: 01 46 15 47 16
Drawing: DJ7SY
Last modified: 12/04/2001 11:45:10
Plot date: 16/05/2001 16:21:16
VOIE DJ1 DJ2
mic
mic line
line
gain
hi lo
mid
fad
pfl
pfl-com
stéréo
voice over
insert-out
insert
insert-in
SCHEMA C01DJ // BOARD FREEVOX C01
VOIE SEREO 1
start
SCHEMA C02DJ_ML // BOARD FREEVOX C02
VOIES STEREO 2-3
phono
CROSS FADE
SCHEMA C02DJ_PL // BOARD FREEVOX C02
VOIES STEREO 4-5
line 1
line 2
SCHEMA C02DJ_LL // BOARD FREEVOX C02
BOARD FREEVOX C11A
record +DJ
left
right
stéréo 1
mono 1
time limit
Master stéréo 1
SCHEMA C03DJ // BOARD FREEVOX C03
stéréo 2
VU RIGHT
VU LEFT
record - DJ
disco sound
Master stéréo 2
SCHEMA C62DJ // BOARD FREEVOX C62
SCHEMA C56 // BOARD FREEVOX C56
PFL.L
OUT MONO
Split
phones
PFL.R
PFL MONO
220v
Terre
Alimentation Séparée
Ref:PSU 15
+15v
0v
-15v
Terre

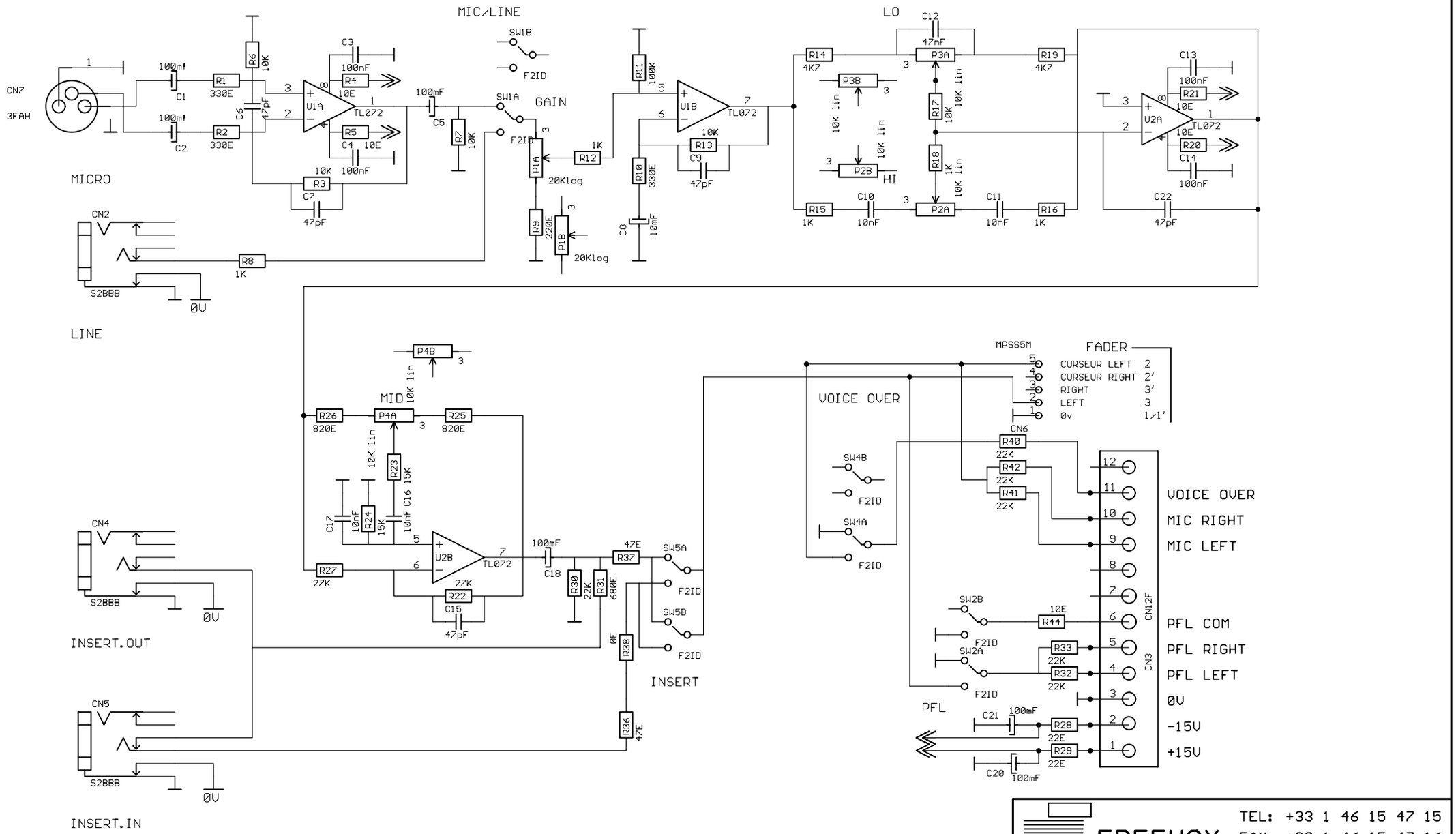

FREEVOX

TEL: +33 1 46 15 47 15
FAX: +33 1 46 15 47 16

Document: C01DJ

VOIE MICRO/LINE DJ7

REV:

Date: 18/01/2001 17:29:22

Sheet: 1/1

** FOR DJ7 **

LAYOUT TO SHOW COMPONENT ALLOCATION
MONO INPUT DJ1/DJ2 MICRO/LINE
* BOARD ref: C01
* SCHEMA ref: C01DJ

FREEVOX
TEL: 01 46 15 47 15
FAX: 01 46 15 47 16

Drawing: C01DJ
Last modified: 23/01/2001 15:50:50
Plot date: 16/05/2001 16:46:21

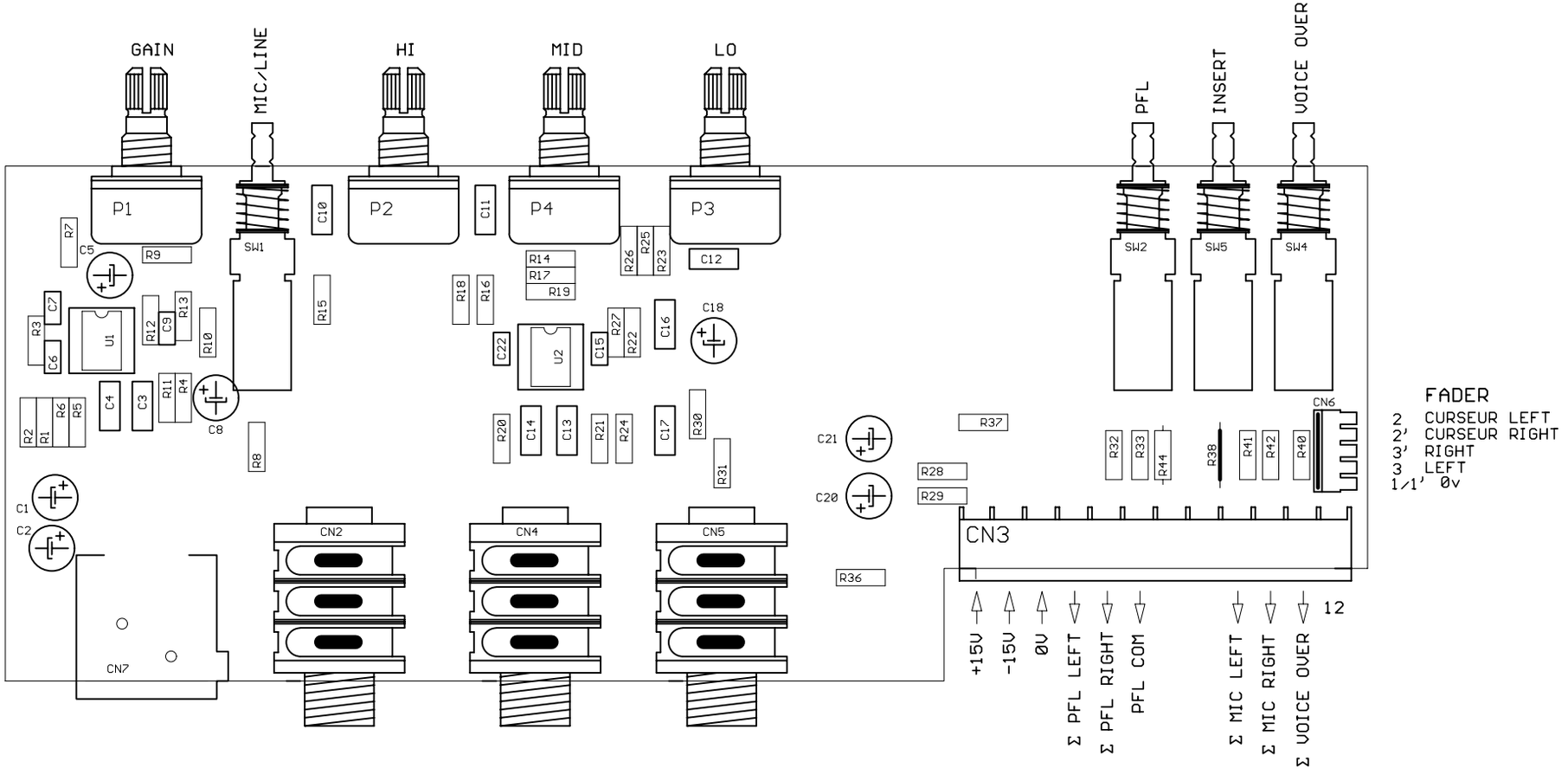

FREEVOX
TEL: +33 1 46 15 47 15
FAX: +33 1 46 15 47 16

REV:

Document: C02DJ_ML

VOIE LINE/MICRO DJ7

Date: 17/01/2001 09:18:10 | Sheet: 1/1

MICRO

CN9 3FAH

LINE

CN4 SQ3097

CN5 SQ3097

CN8 S2BBB

START

LINE/MICRO

GAIN 22K Log

LO

HI

MID

FADER MPSS5M

CURSEUR LEFT 2
CURSEUR RIGHT 2'
RIGHT 3'
LEFT 3
0v 1/1'

CN10

CN12F

CN6

PFL

STEREO RIGHT
STEREO LEFT
PFL COM
PFL RIGHT
PFL LEFT
0V
-15V
+15V

**** FOR DJ7 ****

LAYOUT TO SHOW COMPONENT ALLOCATION
STEREO INPUT 1 LINE/MICRO
* BOARD ref: C02
* SCHEMA ref: C02DJ_ML

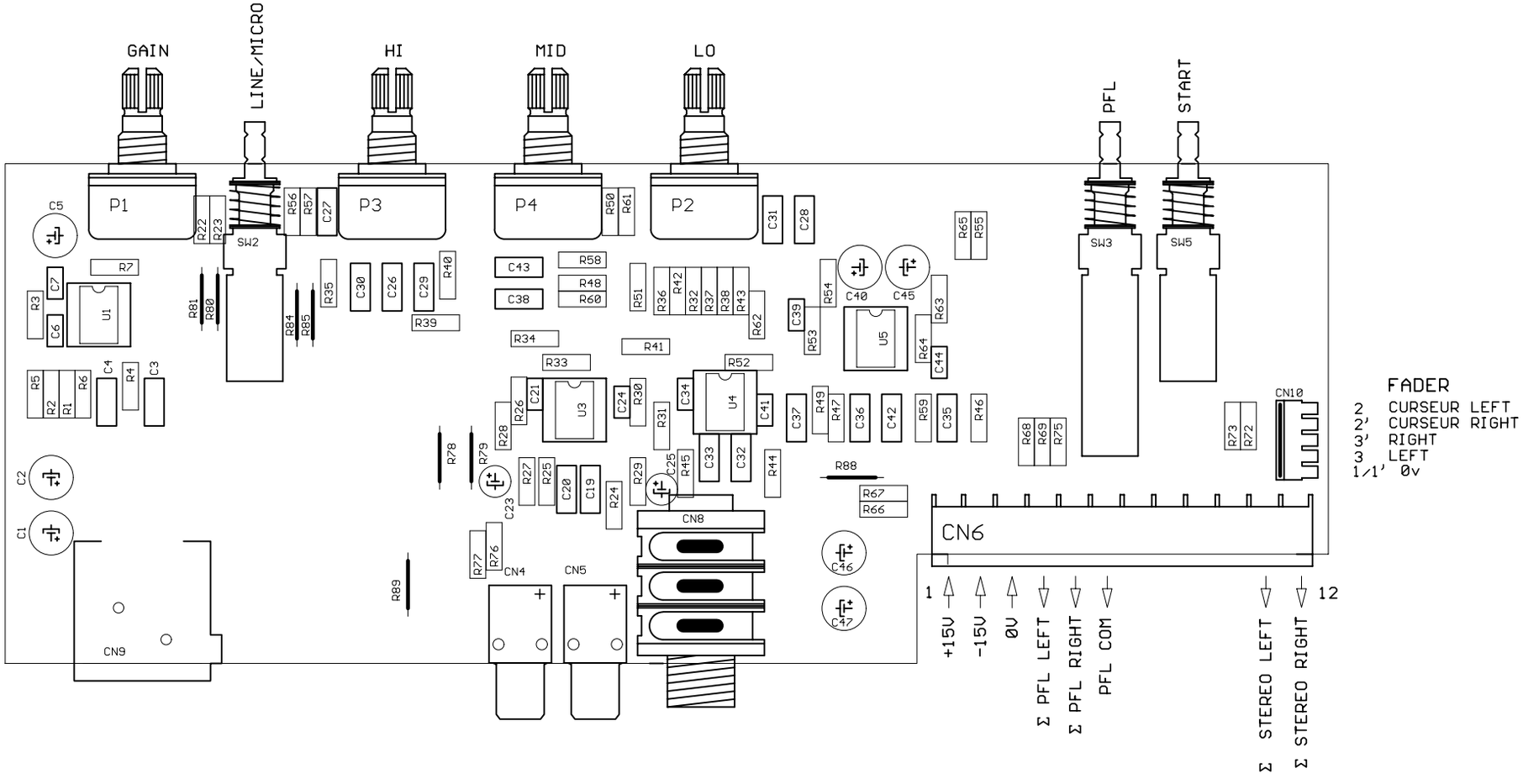

FADER
2 CURSEUR LEFT
2' CURSEUR RIGHT
3' RIGHT
3 LEFT
1/1' 0v

FREEVOX
TEL: 01 46 15 47 15
FAX: 01 46 15 47 16

Drawing: C02DJ_ML
Last modified: 23/01/2001 15:51:50
Plot date: 16/05/2001 16:50:20

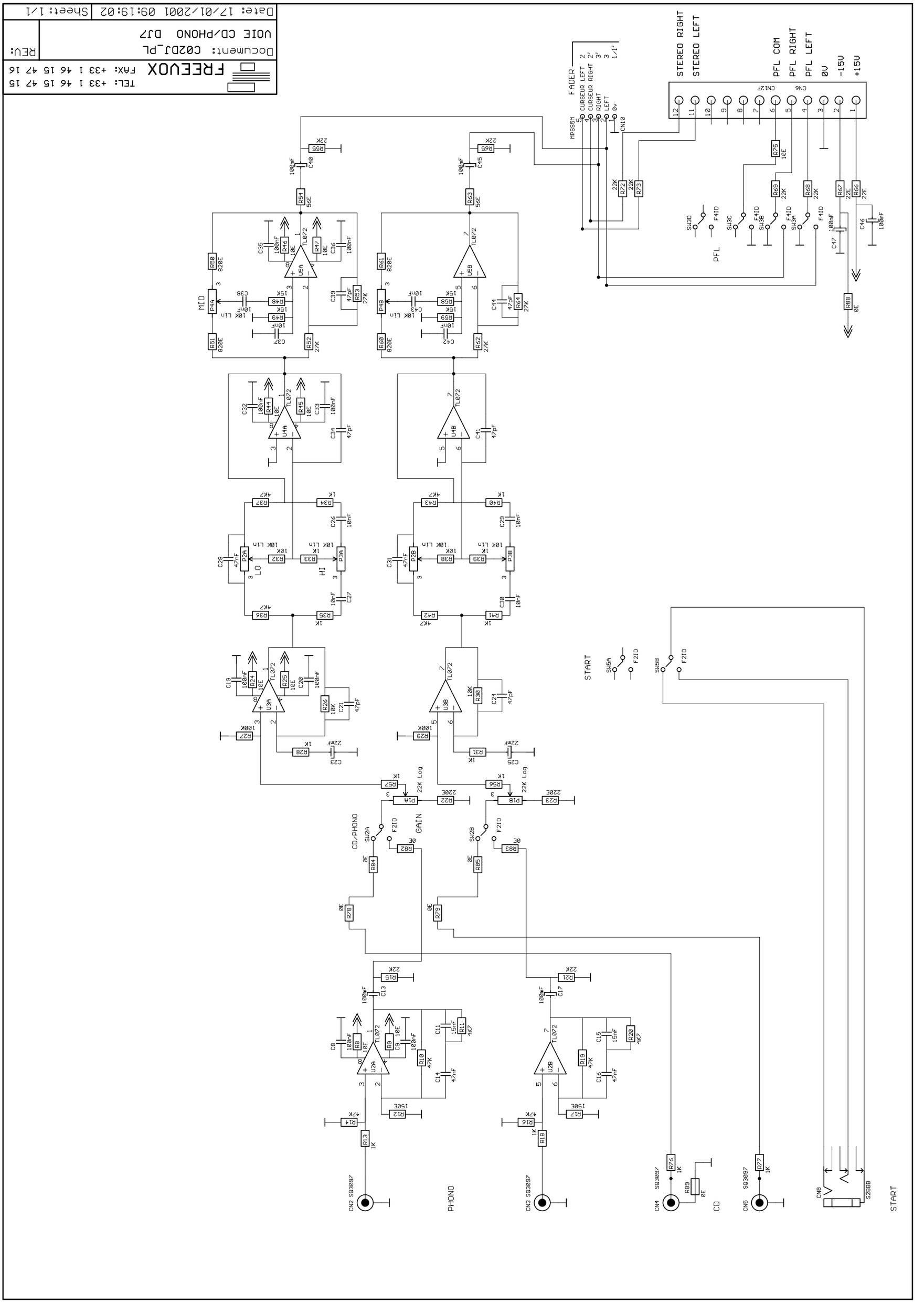
FREEVOX
TEL: +33 1 46 15 47 15
FAX: +33 1 46 15 47 16
Document: C02DJ_PL
VOIE CD/PHONO DJ7
REV:
Date: 17/01/2001 09:19:02
Sheet: 1/1
FADER
CURSEUR LEFT
CURSEUR RIGHT
RIGHT
LEFT
0v
MPSS5M
CN10
STEREO RIGHT
STEREO LEFT
PFL COM
PFL RIGHT
PFL LEFT
0V
-15V
+15V
CN6
CN12F
PFL
MID
LO
HI
START
GAIN
CD/PHONO
PHONO
CD
CN2 SQ3097
CN3 SQ3097
CN4 SQ3097
CN5 SQ3097
CN8
S2BBB

** FOR DJ7 **

LAYOUT TO SHOW COMPONENT ALLOCATION
STEREO INPUT 2/3 CD/PHONO
* BOARD ref: CO2
* SCHEMA ref: C02DJ_PL

FREEVOX
TEL: 01 46 15 47 15
FAX: 01 46 15 47 16

Drawing: C02DJ_PL
Last modified: 23/01/2001 15:52:10
Plot date: 17/05/2001 14:44:17

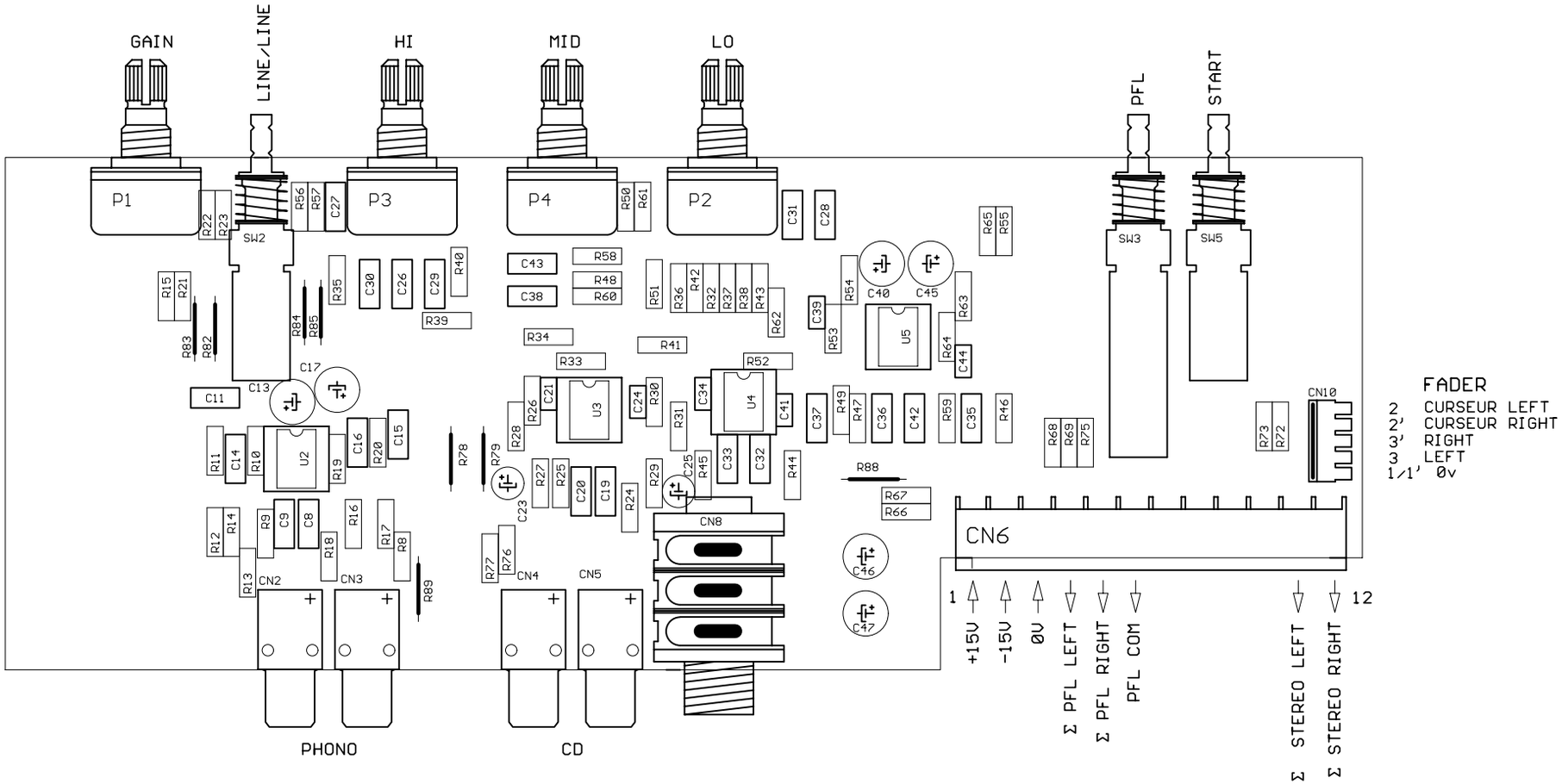

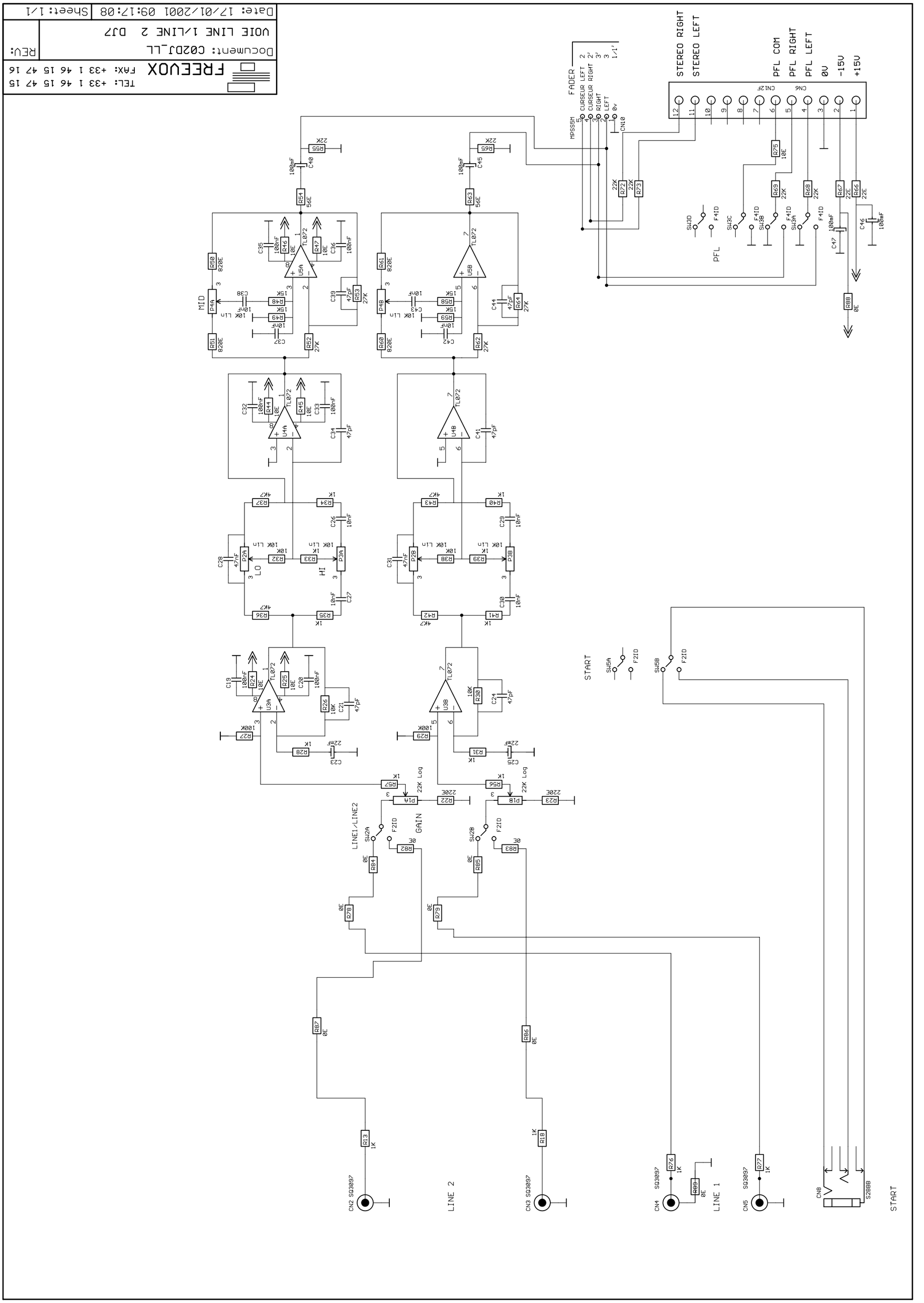
FREEVOX
TEL: +33 1 46 15 47 15
FAX: +33 1 46 15 47 16
Document: C02DJ_LL
VOIE LINE 1/LINE 2 DJ7
REV:
Date: 17/01/2001 09:17:08
Sheet: 1/1
FADER
CURSEUR LEFT
CURSEUR RIGHT
RIGHT
LEFT
0v
MPSS5M
CN10
STEREO RIGHT
STEREO LEFT
PFL COM
PFL RIGHT
PFL LEFT
0V
-15V
+15V
CN6
CN12F
PFL
MID
LO
HI
GAIN
LINE1/LINE2
START
LINE 2
LINE 1
CN2 SQ3097
CN3 SQ3097
CN4 SQ3097
CN5 SQ3097
CN8
S2BBB

** FOR DJ7 **

LAYOUT TO SHOW COMPONENT ALLOCATION
STEREO INPUT 4/5 LINE1/LINE2
* BOARD ref: C02
* SCHEMA ref: C02DJ_LL

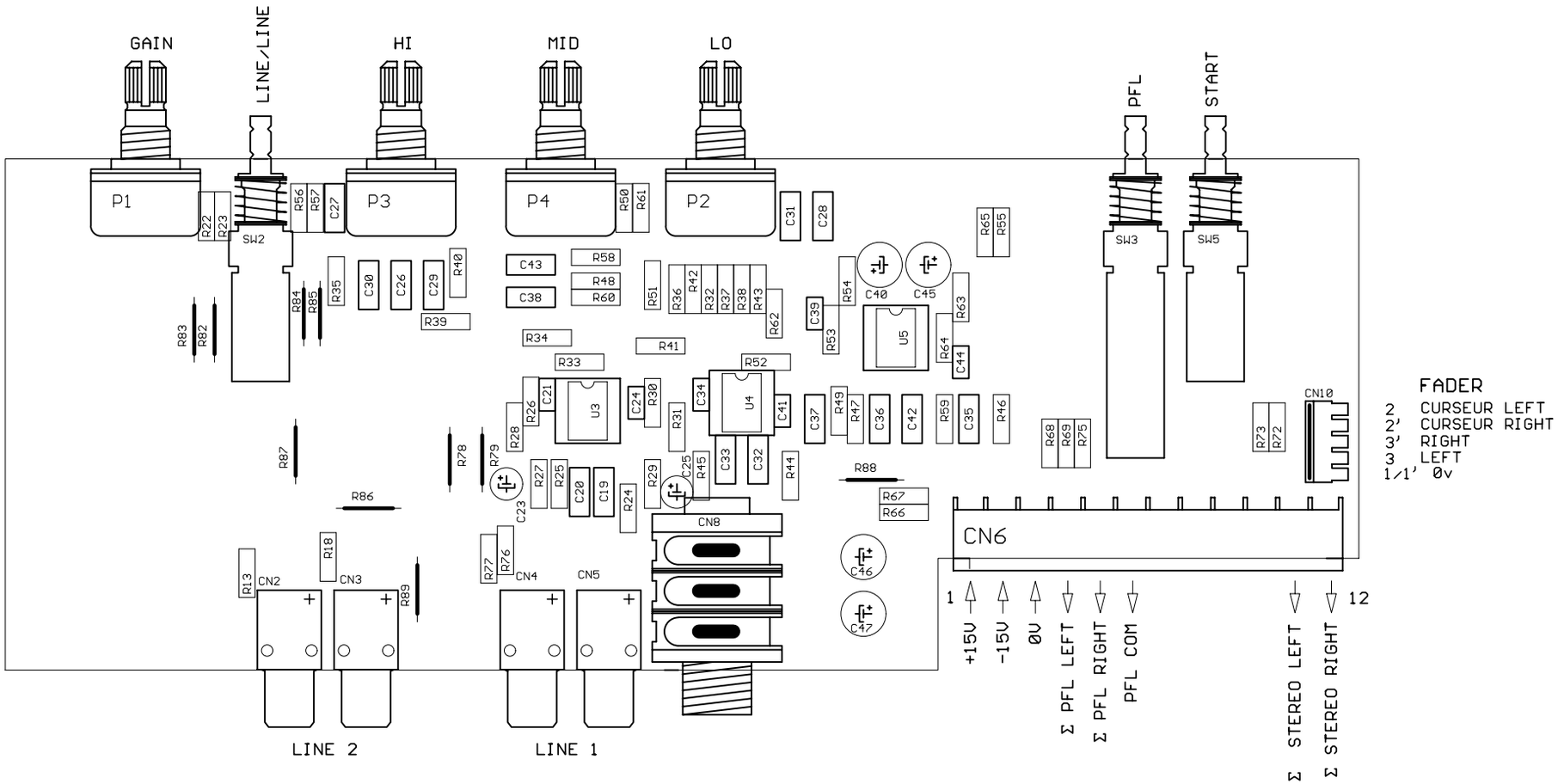

FREEVOX
TEL: 01 46 15 47 15
FAX: 01 46 15 47 16

Drawing: C02DJ_LL
Last modified: 23/01/2001 15:51:10
Plot date: 11/05/2001 16:24:47

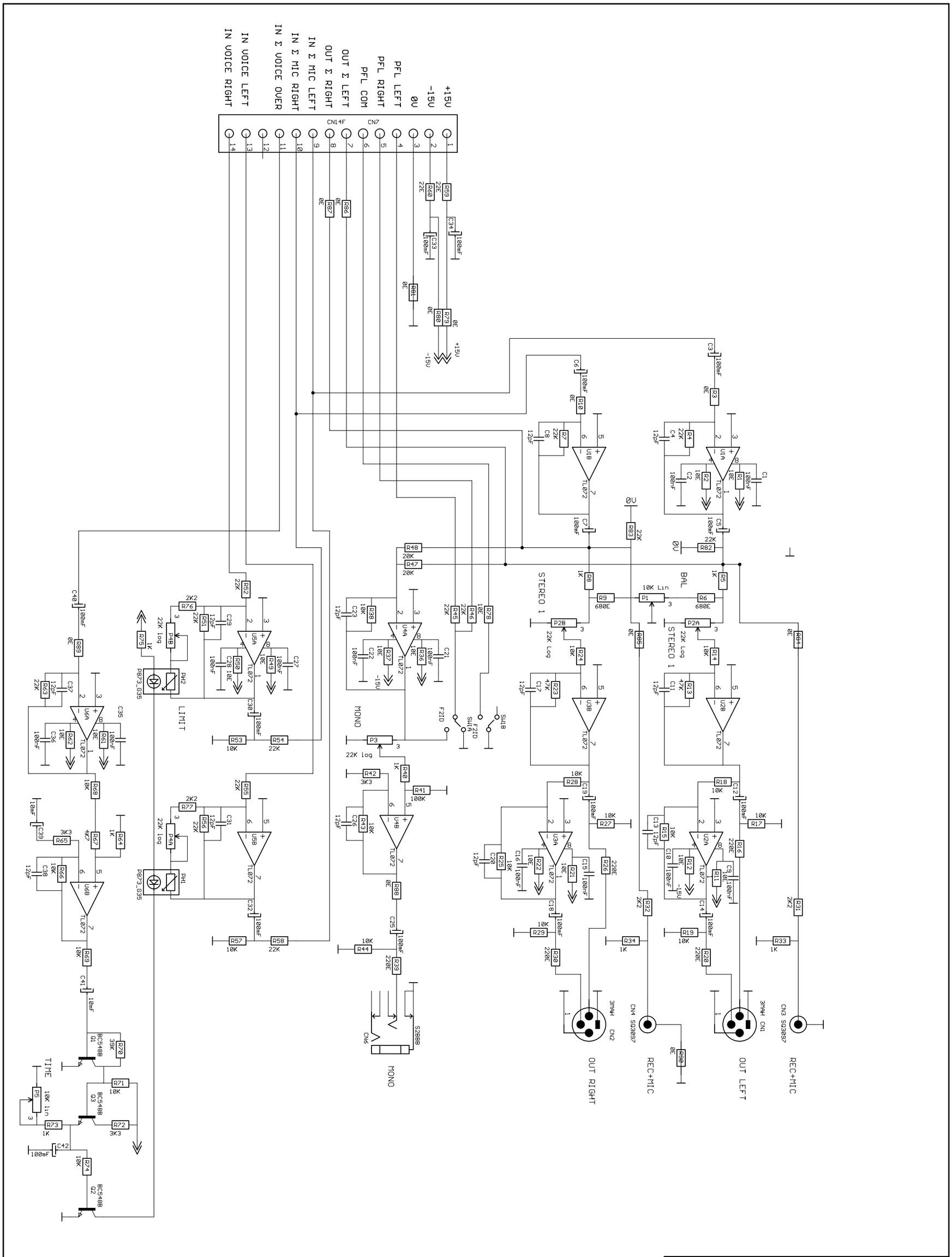

FREEVOX

TEL: +33 1 46 15 47 15
FAX: +33 1 46 15 47 16

Document: C03DJ

MASTER STEREO 1 DJ7

REV:

Date: 17/01/2001 11:37:00

Sheet: 1/1

**** FOR DJ7 ****

LAYOUT TO SHOW COMPONENT ALLOCATION
MASTER STEREO 1
* BOARD ref: C03
* SCHEMA ref: C03DJ

FREEVOX
TEL: 01 46 15 47 15
FAX: 01 46 15 47 16

Drawing: C03DJ
Last modified: 23/01/2001 15:52:30
Plot date: 17/05/2001 10:00:18

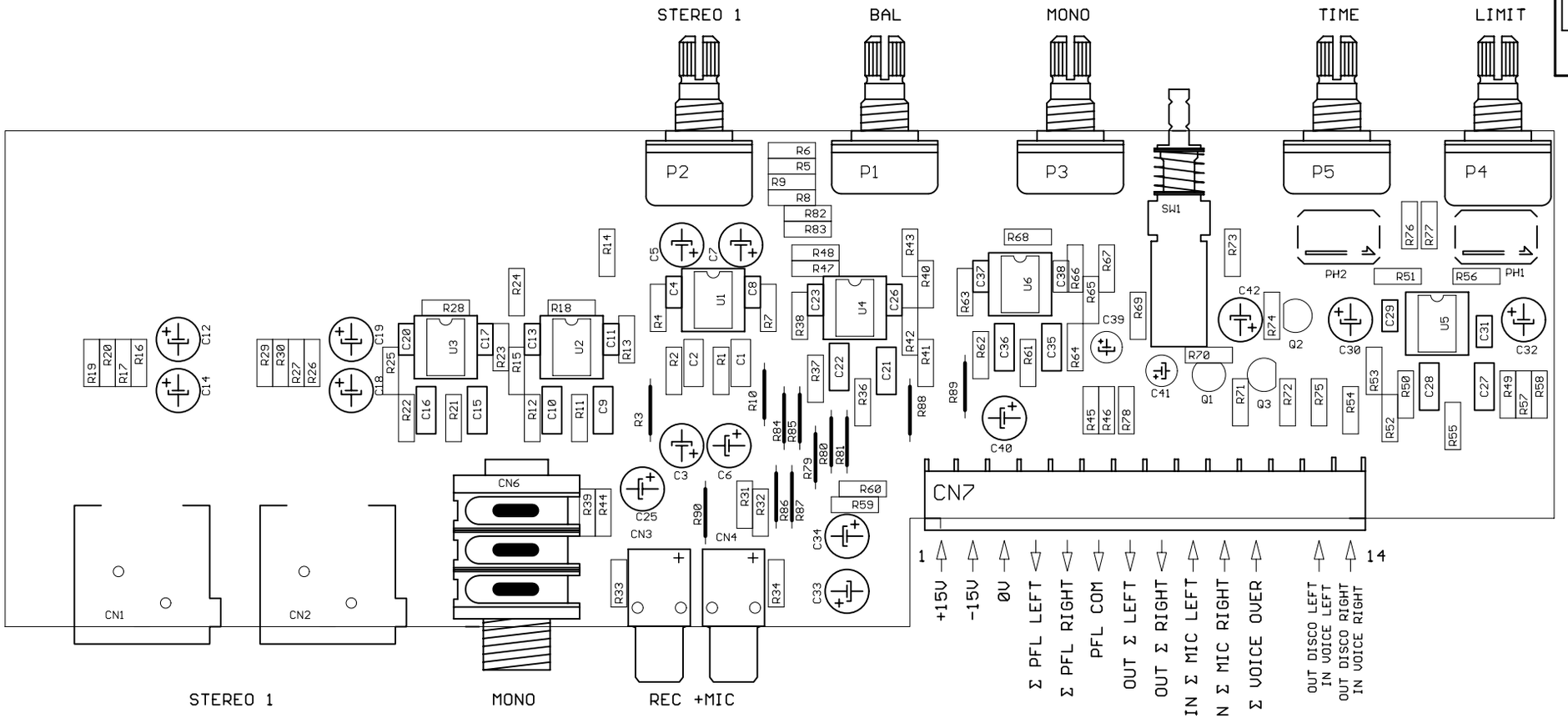

Date: 17/01/2001 11:35:18	Sheet: 1/1
Document: C62DJ MASTER STEREO 2 DJ7	REV:

FREEVOX
TEL: +33 1 46 15 47 15
FAX: +33 1 46 15 47 16

OUT LEFT
OUT RIGHT
PHONES
VU LEFT
VU RIGHT
Record Left
Record Right
SQ3097 CN4
SQ3097 CN5
DISCO SOUND
ON
STEREO 2
BAL
CN1
CN2
CN7
CN9
CN8
CN12F
Zener 6V2
+15V
-15V
0V
IN Σ PFL.L
IN Σ PFL.R
IN PFL.COM
IN.STEREO.2.L
IN.STEREO.2.R
OUT.DISC.L
OUT.DISC.R
IN Σ STEREO.L
IN Σ STEREO.R

**** FOR DJ7 ****

LAYOUT TO SHOW COMPONENT ALLOCATION
MASTER STEREO 1
* BOARD ref: C03
* SCHEMA ref: C03DJ

FREEVOX
TEL: 01 46 15 47 15
FAX: 01 46 15 47 16

Drawing: C03DJ
Last modified: 23/01/2001 15:52:30
Plot date: 17/05/2001 10:00:18

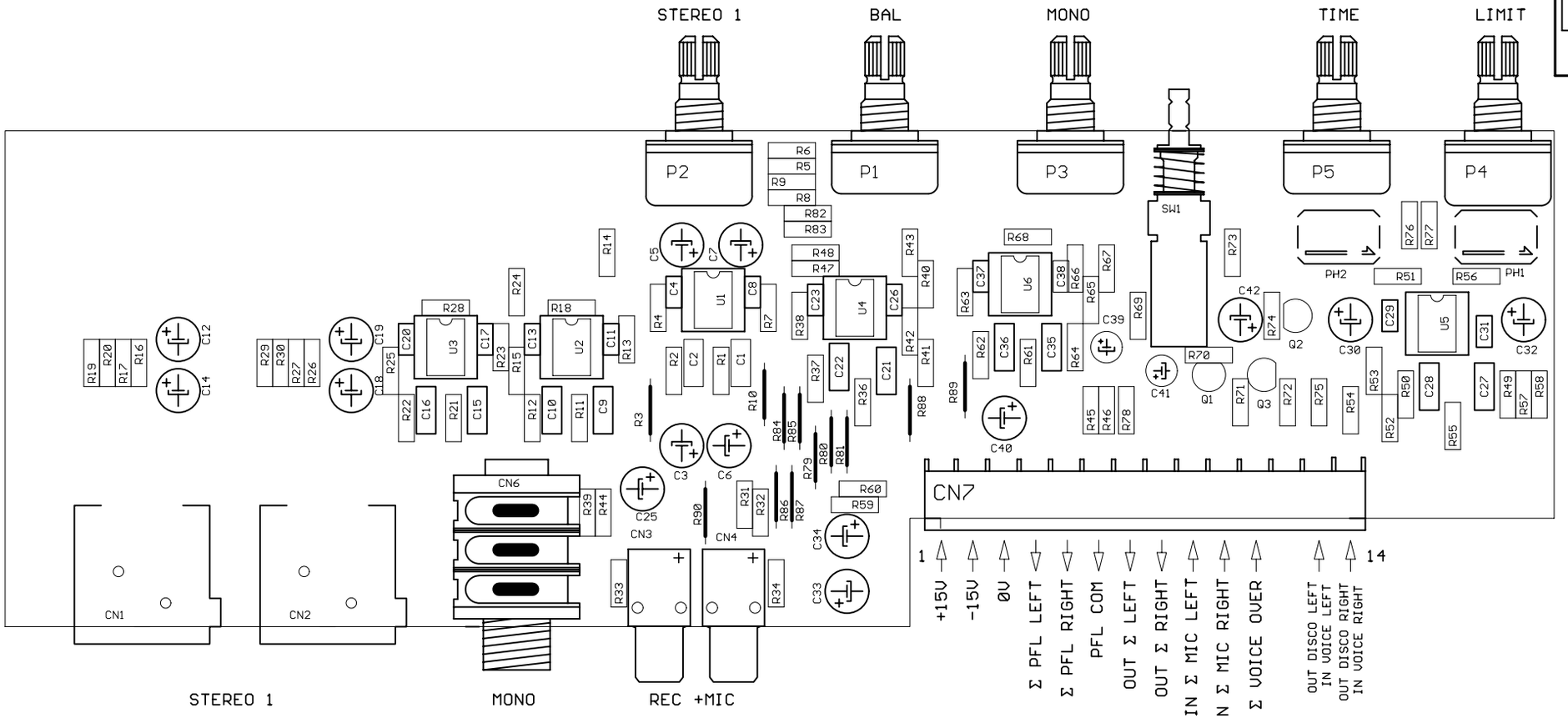

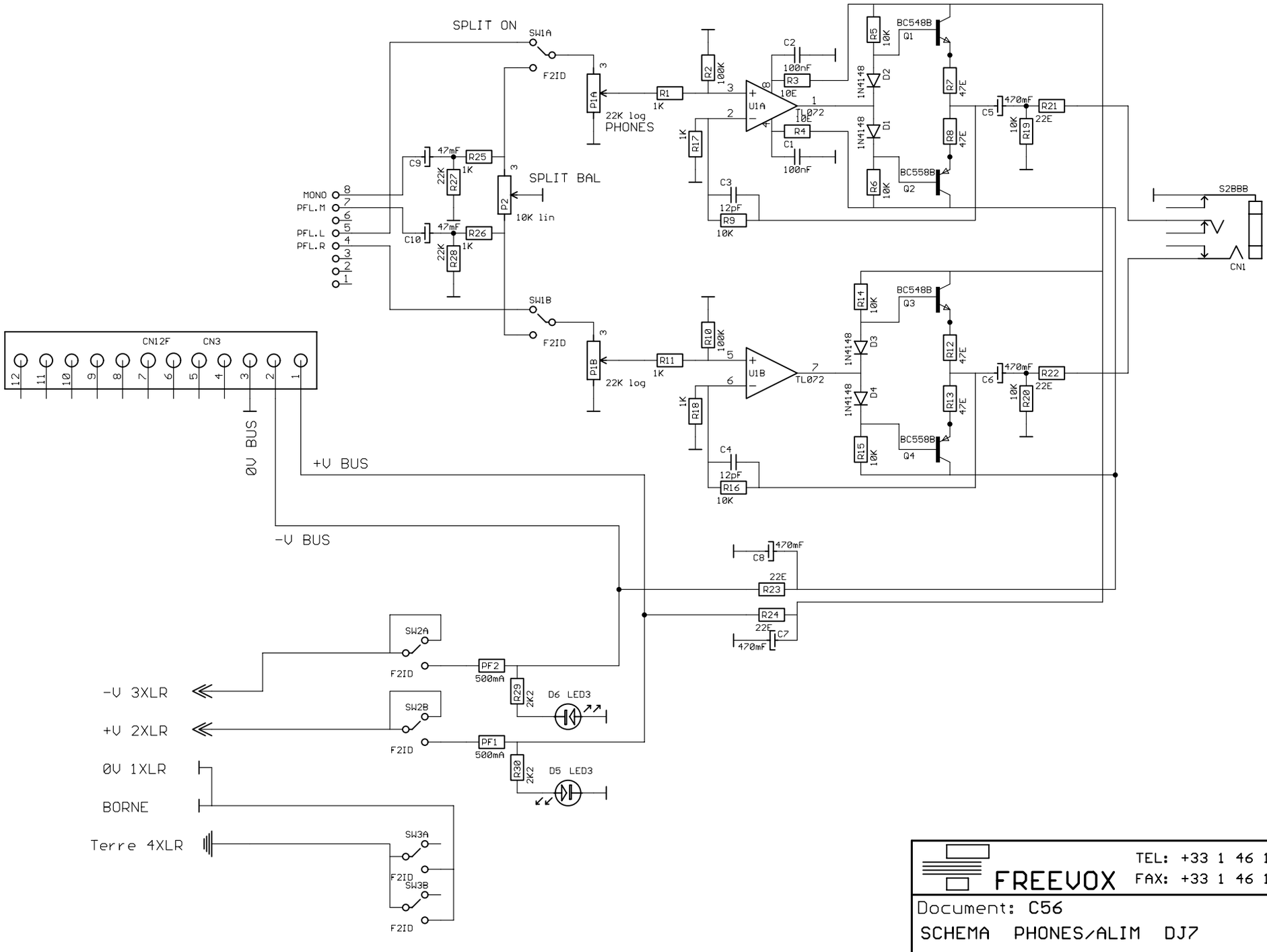

FREEVOX
TEL: +33 1 46 15 47 15
FAX: +33 1 46 15 47 16

Document: C56
SCHEMA PHONES/ALIM DJ7

REV:

Date: 17/01/2001 11:29:10

Sheet: 1/1

FREEVOX
TEL: 01 46 15 47 15
FAX: 01 46 15 47 16

Drawing: C56
Last modified: 23/01/2001 15:53:18
Plot date: 17/05/2001 10:06:55

** FOR DJ7 **

LAYOUT TO SCHOW COMPONENT ALLOCATION
PHONES
* BOARD ref: C56
* SCHEMA ref: C56

FACE MARQUAGE- CI-C56 FREEVOX
CSI 01 46 15 47 15

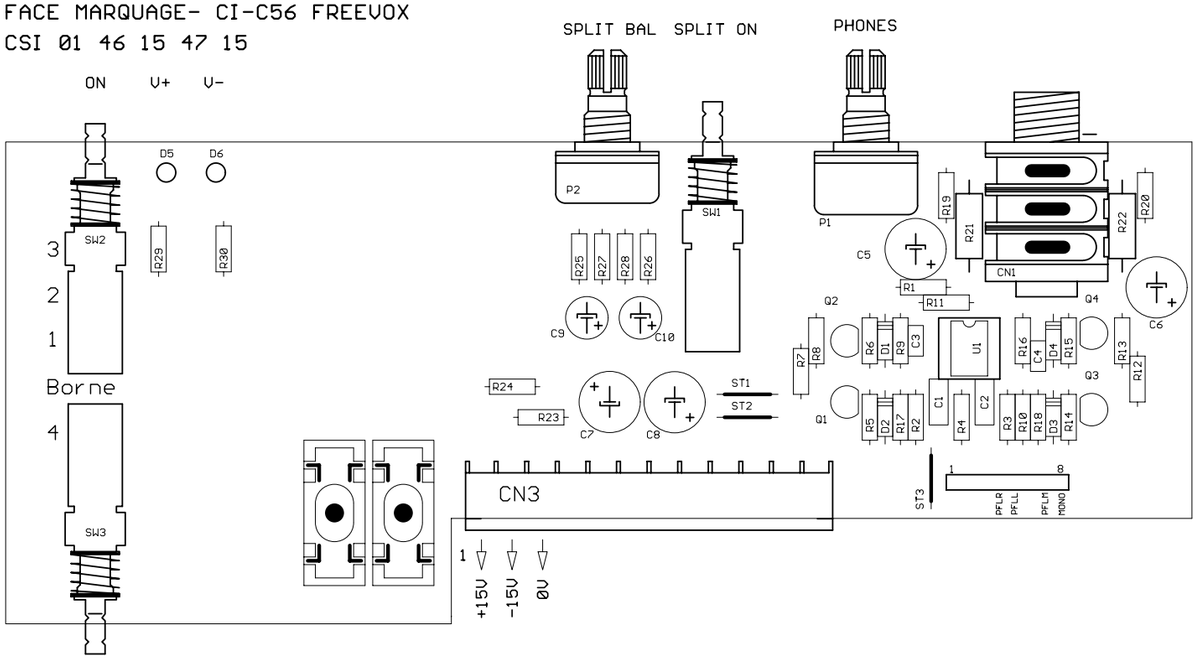

FREEVOX
TEL: 01 46 15 47 15
FAX: 01 46 15 47 16

Drawing: C11A
Last modified: 23/01/2001 14:16:18
Plot date: 17/05/2001 10:09:56

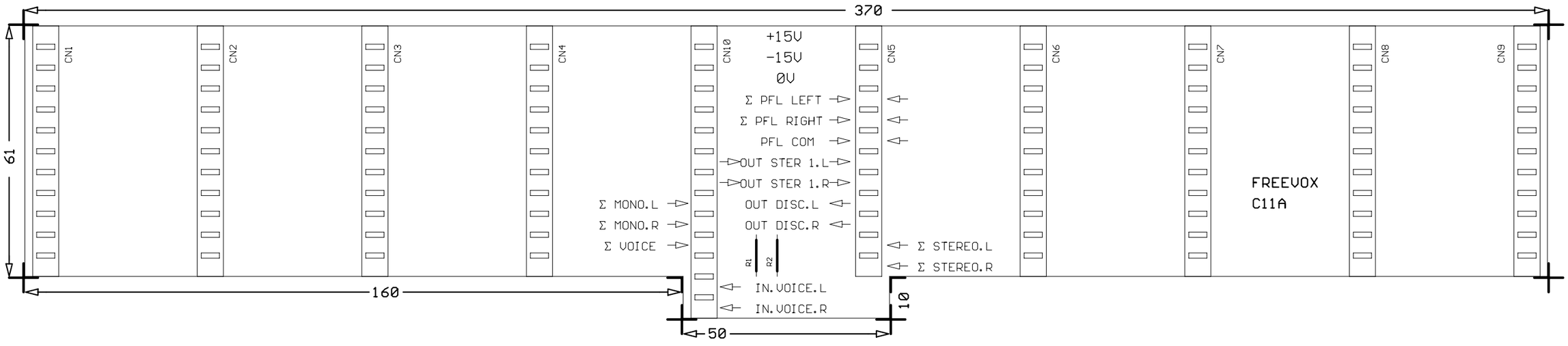

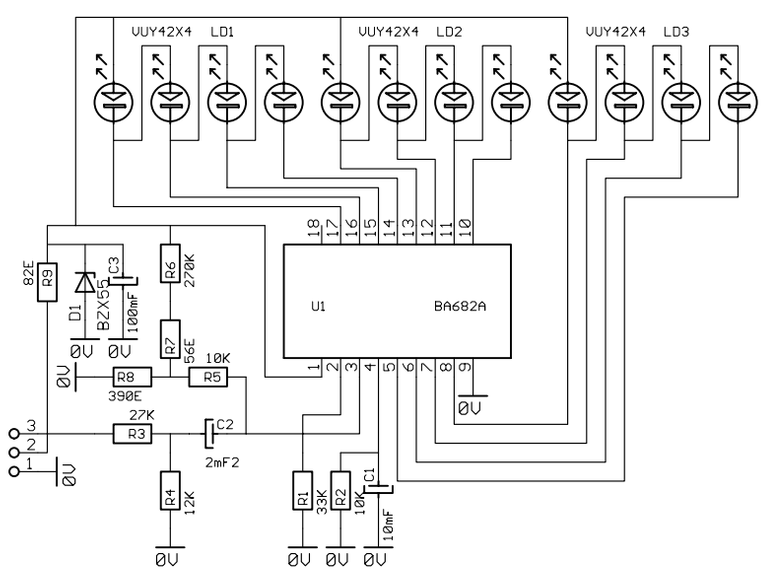

FREEVOX
TEL: 01 46 15 47 15
FAX: 01 46 15 47 16

Document: FR_VU

REV:

VU METER DJ7/DJ CLUB/ DJ4

Date: 29/01/2001 15:55:36

Sheet: 1/1

FACE MARQUAGE- CI- FR_VU FREEVOX
CSI 01 46 15 47 15

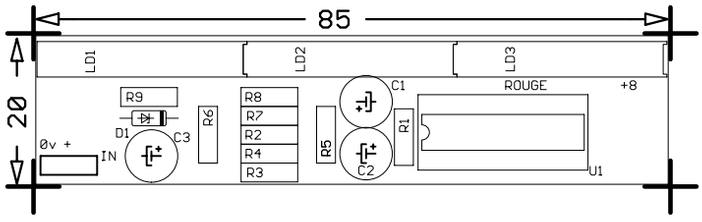

FREEVOX
TEL: 01 46 15 47 15
FAX: 01 46 15 47 16

Drawing:	FR_VU
Last modified:	17/05/2001 10:11:42
Plot date:	17/05/2001 11:01:04

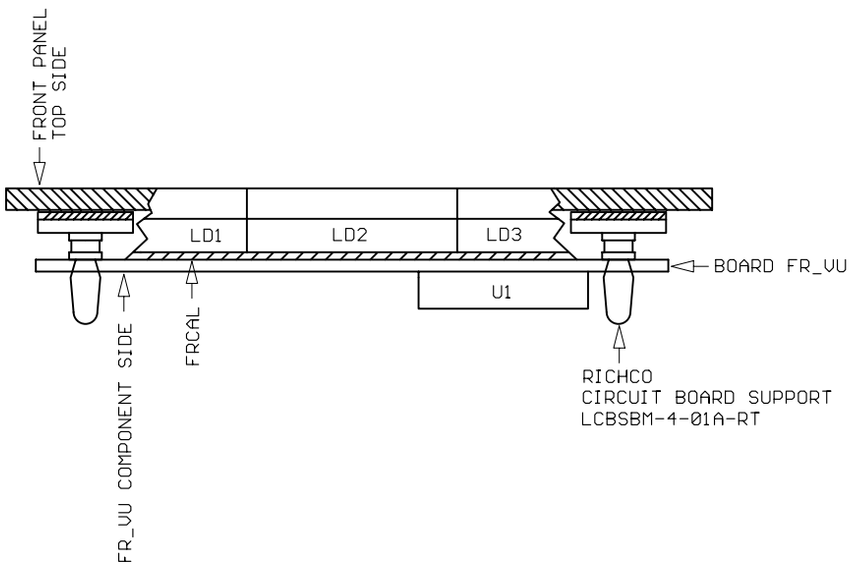

FREEVOX
TEL: 01 46 15 47 15
FAX: 01 46 15 47 16

Drawing:	VUMONT_A
Last modified:	01/02/2001 11:34:20
Plot date:	17/05/2001 11:01:53

FREEVOX
TEL: 01 46 15 47 15
FAX: 01 46 15 47 16

Document: PSU15B

REV:

Date: 17/05/2001 10:28:00
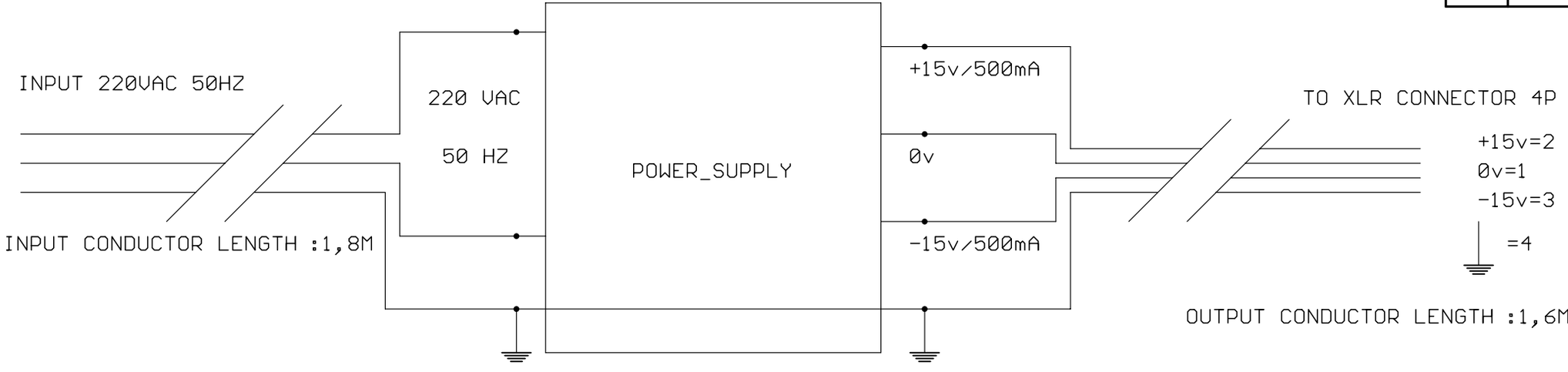
Sheet: 1/1