SCHEMATIC DIAGRAM
MODEL 812

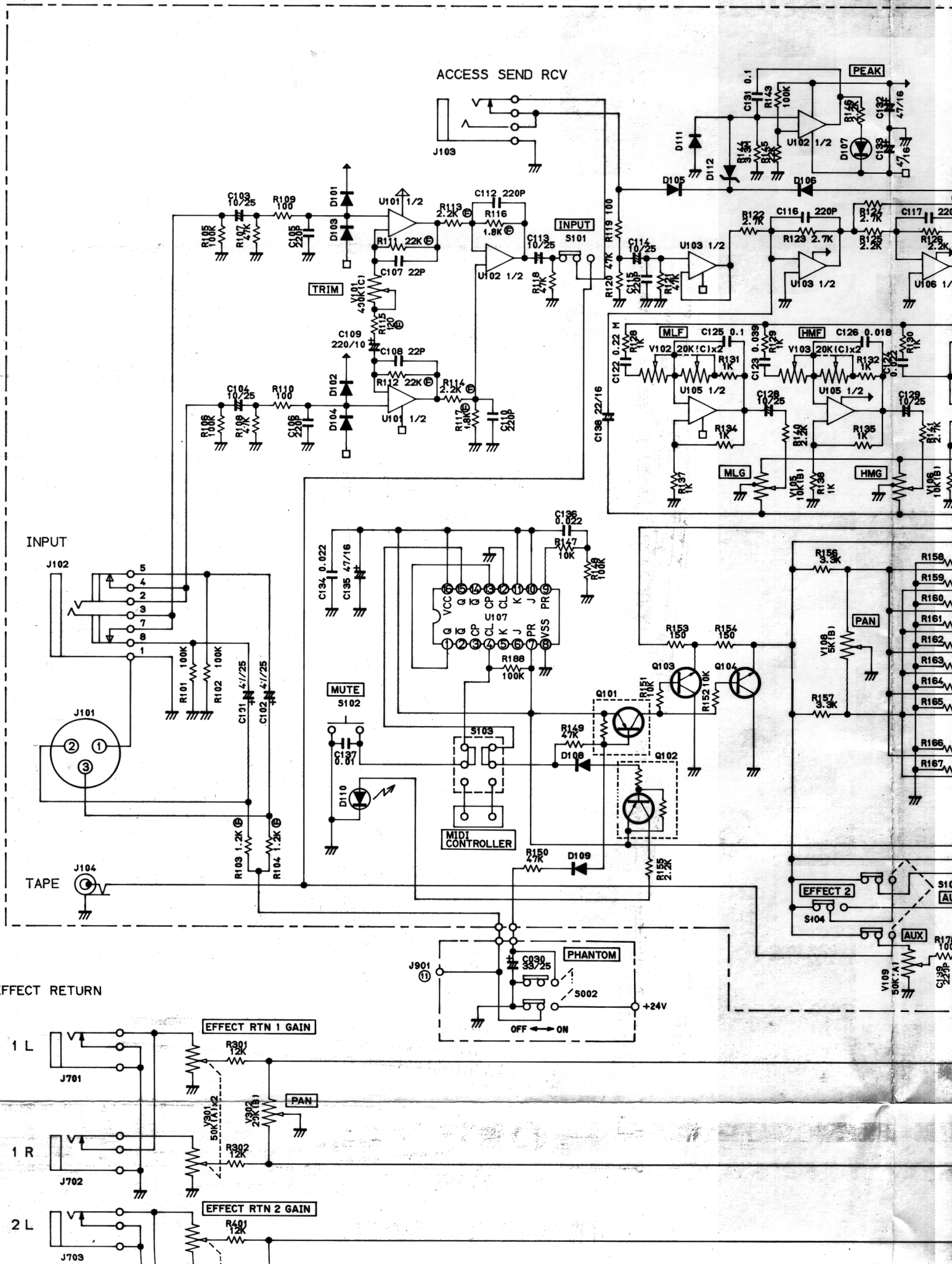

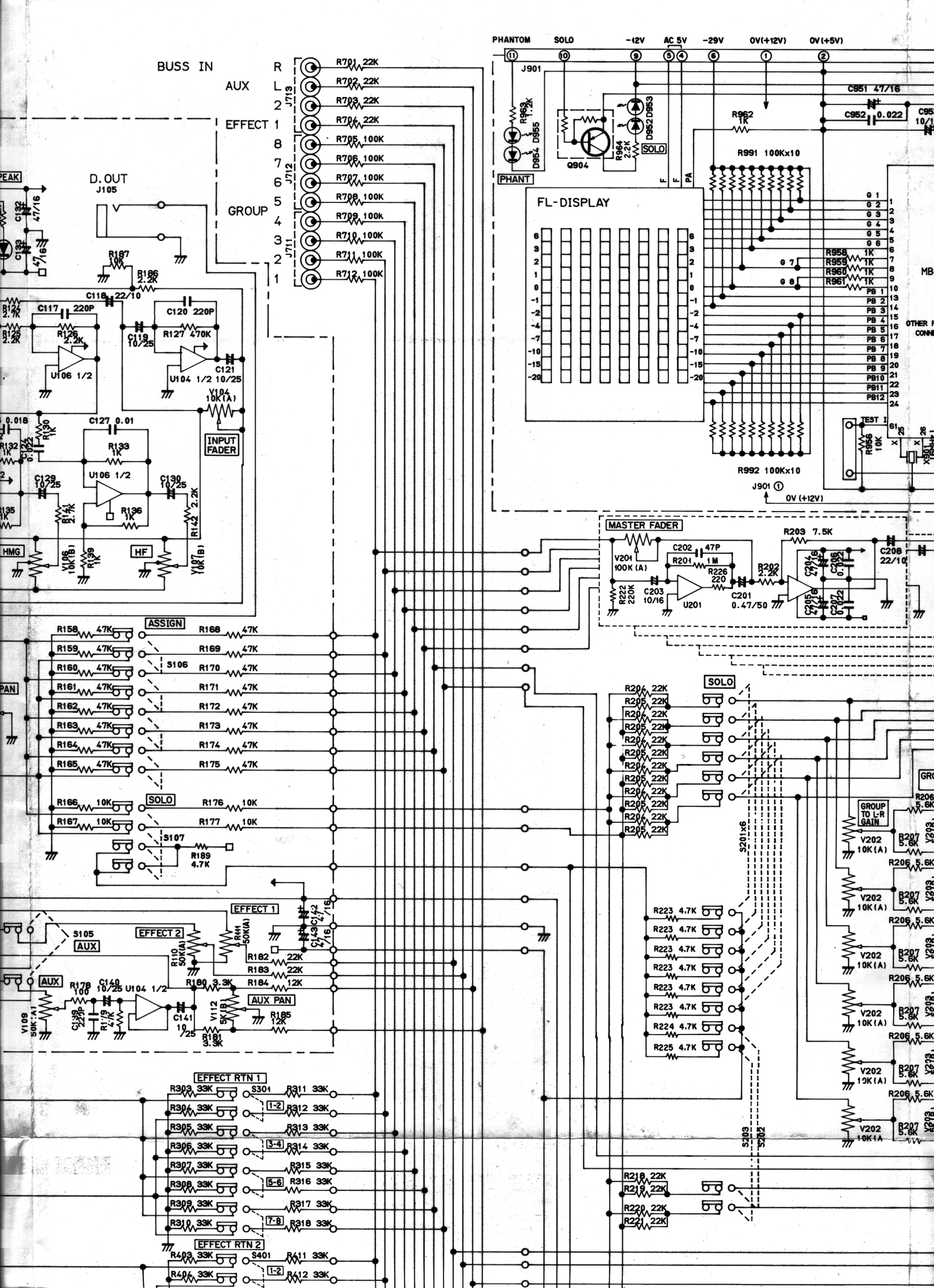
BUSS IN
AUX
EFFECT 1
GROUP
R
L
2
8
7
6
5
4
3
2
1
J713
J712
J711
R701 22K
R702 22K
R703 22K
R704 22K
R705 100K
R706 100K
R707 100K
R708 100K
R709 100K
R710 100K
R711 100K
R712 100K
D.OUT
J105
R187 10K
R186 2.2K
C116 22/10
C117 220P
R126 2.2K
U106 1/2
C118 10/25
C120 220P
R127 470K
C121
U104 1/2 10/25
V104 10K(A)
INPUT FADER
C127 0.01
R133 1K
U106 1/2
C129 10/25
C130 10/25
R136 1K
R142 2.2K
HMG
HF
V106 10K(B)
R139 1K
V107 10K(B)
PHANTOM
SOLO
-12V
AC 5V
-29V
0V(+12V)
0V(+5V)
J901
D954 D955
R963 1.2K
Q904
D952 D953
R964 2.2K
SOLO
PHANT
FL-DISPLAY
R962 1K
C951 47/16
C952 0.022
R991 100Kx10
R992 100Kx10
R956 1K
R959 1K
R960 1K
R961 1K
TEST
R966 10K
X901
J901 ①
0V (+12V)
MASTER FADER
V201 100K (A)
C202 47P
R201 1M
R226 220
R222 220K
C203 10/16
U201
C201 0.47/50
R203 7.5K
R202 2.2K
C204 47/16
C205 0.022
C206 47/16
C207 0.022
C208 22/10
ASSIGN
R158 47K
R159 47K
R160 47K
R161 47K
R162 47K
R163 47K
R164 47K
R165 47K
R168 47K
R169 47K
R170 47K
R171 47K
R172 47K
R173 47K
R174 47K
R175 47K
S106
SOLO
R166 10K
R167 10K
R176 10K
R177 10K
S107
R189 4.7K
R204 22K
R205 22K
SOLO
S201x6
GROUP TO L-R GAIN
V202 10K(A)
R206 5.6K
R207 5.6K
R223 4.7K
R224 4.7K
R225 4.7K
EFFECT 1
EFFECT 2
AUX
S105
R110 50K(A)
R111 50K(A)
C143 C142 4/16
R182 22K
R183 22K
R184 12K
R180 3.3K
R178 100
C140 10/25
U104 1/2
C141 10/25
R181 3.3K
V112 5K(B)
AUX PAN
R185 12K
V109 50K(A)
C139 229P
R179 4.7K
EFFECT RTN 1
R303 33K
R304 33K
R305 33K
R306 33K
R307 33K
R308 33K
R309 33K
R310 33K
S301
1-2
3-4
5-6
7-8
R311 33K
R312 33K
R313 33K
R314 33K
R315 33K
R316 33K
R317 33K
R318 33K
S303
S302
R218 22K
R219 22K
R220 22K
R221 22K
EFFECT RTN 2
R403 33K
R404 33K
S401
1-2
R411 33K
R412 33K

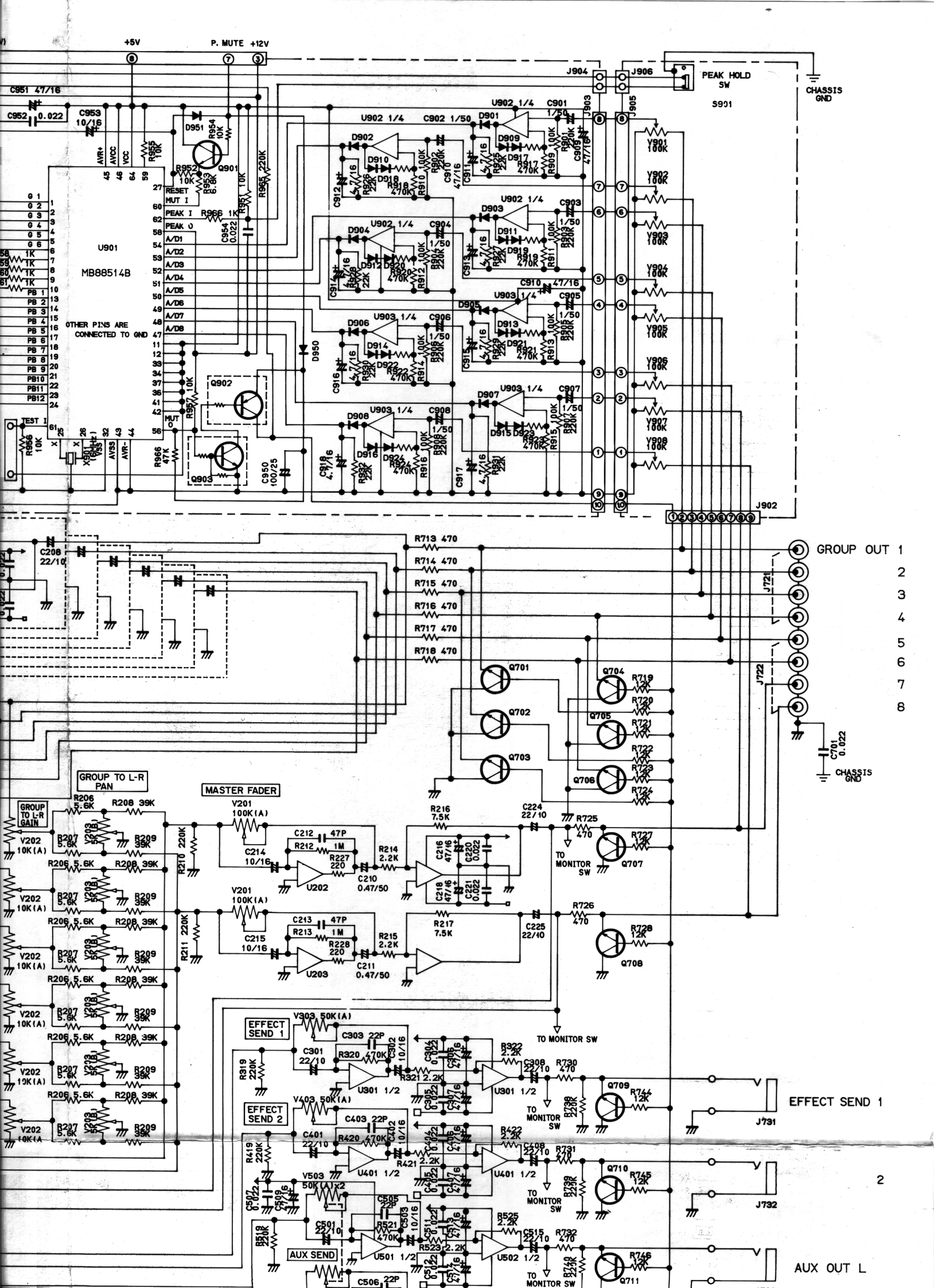
+5V
P. MUTE +12V
PEAK HOLD SW
S901
CHASSIS GND
J904
J906
J903
J905
J902
U901
MB88514B
OTHER PINS ARE CONNECTED TO GND
RESET
MUT I
PEAK I
PEAK O
MUT O
TEST I
U902 1/4
U903 1/4
GROUP OUT 1
2
3
4
5
6
7
8
J721
J722
C701 0.022
CHASSIS GND
GROUP TO L-R PAN
GROUP TO L-R GAIN
MASTER FADER
V201 100K(A)
V202 10K(A)
U202
U203
TO MONITOR SW
EFFECT SEND 1
EFFECT SEND 2
V303 50K(A)
V403 50K(A)
V503 50K(A)x2
U301 1/2
U401 1/2
U501 1/2
U502 1/2
AUX SEND
J731
J732
AUX OUT L
2

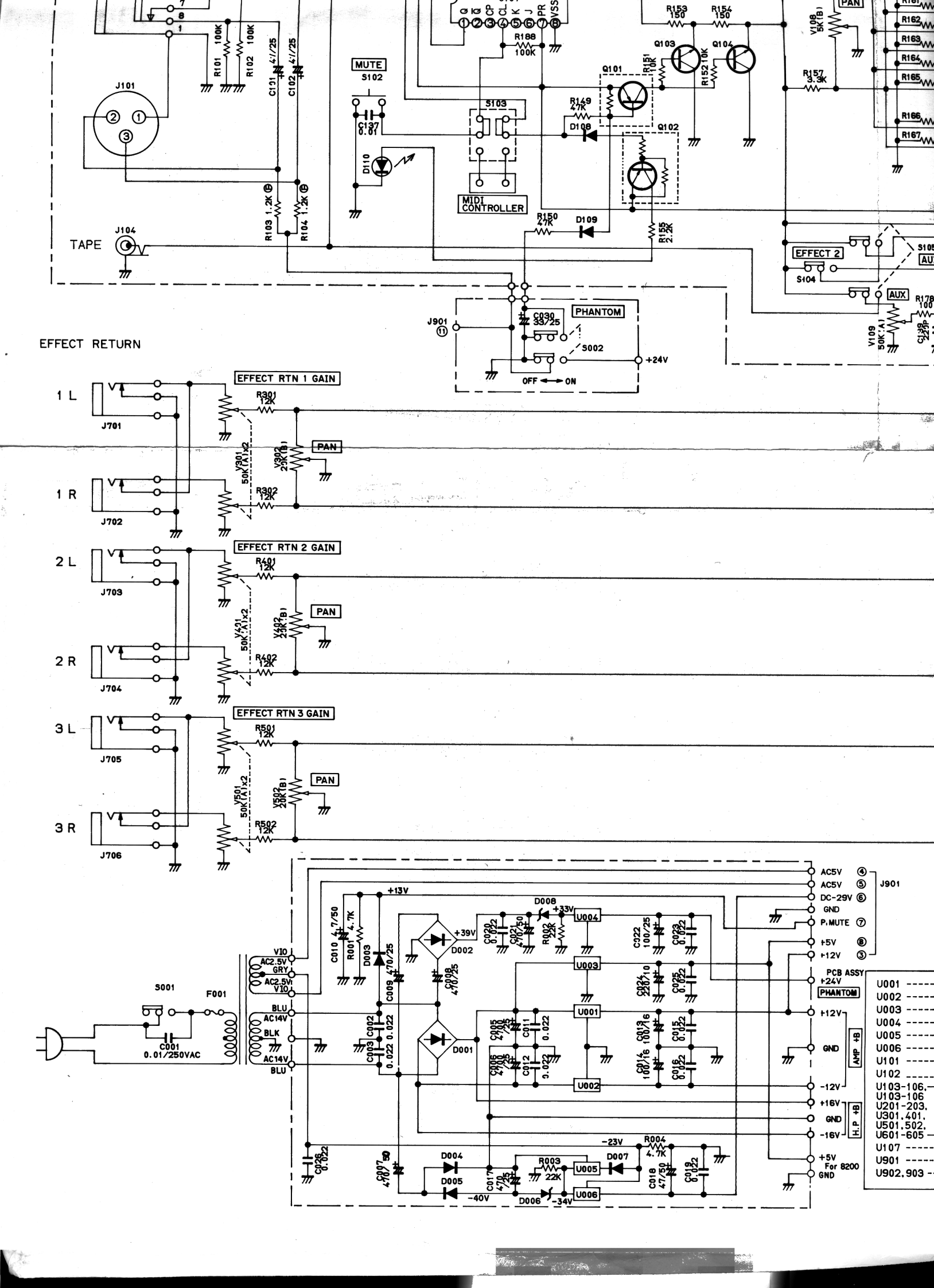
EFFECT RETURN
1 L
1 R
2 L
2 R
3 L
3 R
J701
J702
J703
J704
J705
J706
EFFECT RTN 1 GAIN
EFFECT RTN 2 GAIN
EFFECT RTN 3 GAIN
PAN
R301 12K
R302 12K
R401 12K
R402 12K
R501 12K
R502 12K
V301 50K(A)x2
V302 25K(B)
V401 50K(A)x2
V402 25K(B)
V501 50K(A)x2
V502 25K(B)
J101
J104
TAPE
MUTE
S102
S103
MIDI CONTROLLER
D110
Q101
Q102
Q103
Q104
R149 47K
R150 47K
R151 10K
R152 10K
R153 150
R154 150
R155 2.2K
R157 3.3K
R188 100K
D108
D109
C137 0.01
C131 47/25
C102 47/25
R101 100K
R102 100K
R103 1.2K
R104 1.2K
V108 5K(B)
V109 50K(A)
EFFECT 2
S104
AUX
PHANTOM
J901
C030 33/25
S002
+24V
OFF ON
S001
F001
C001 0.01/250VAC
V10
AC2.5V GRY
AC2.5V V10
BLU
AC14V
BLK
AC14V
BLU
+13V
+39V
D002
D001
D003
D004
D005
D006
D007
D008
+33V
-40V
-34V
-23V
U001
U002
U003
U004
U005
U006
R001 4.7K
R002 22K
R003 22K
R004 4.7K
C010 4.7/50
C009 470/25
C008 470/25
C007 470/50
C017 470/25
C026 0.022
C018 47/50
C019 0.022
C020 0.022
C021 470/50
C022 100/25
C023 0.022
C024 220/10
C025 0.022
C005 470/25
C011 0.022
C012 0.022
C013 100/16
C014 100/16
C015 0.022
C016 0.022
C002 0.022
C003 0.022
AC5V
AC5V
DC-29V
GND
P.MUTE
+5V
+12V
+24V
PHANTOM
+12V
GND
-12V
+16V
GND
-16V
+5V
For 8200
GND
AMP +B
H.P +B
PCB ASSY
U001 -----
U002 -----
U003 -----
U004 -----
U005 -----
U006 -----
U101 -----
U102 -----
U103-106,-
U103-106
U201-203,
U301,401,
U501,502,
U601-605 -
U107 -----
U901 -----
U902,903 --

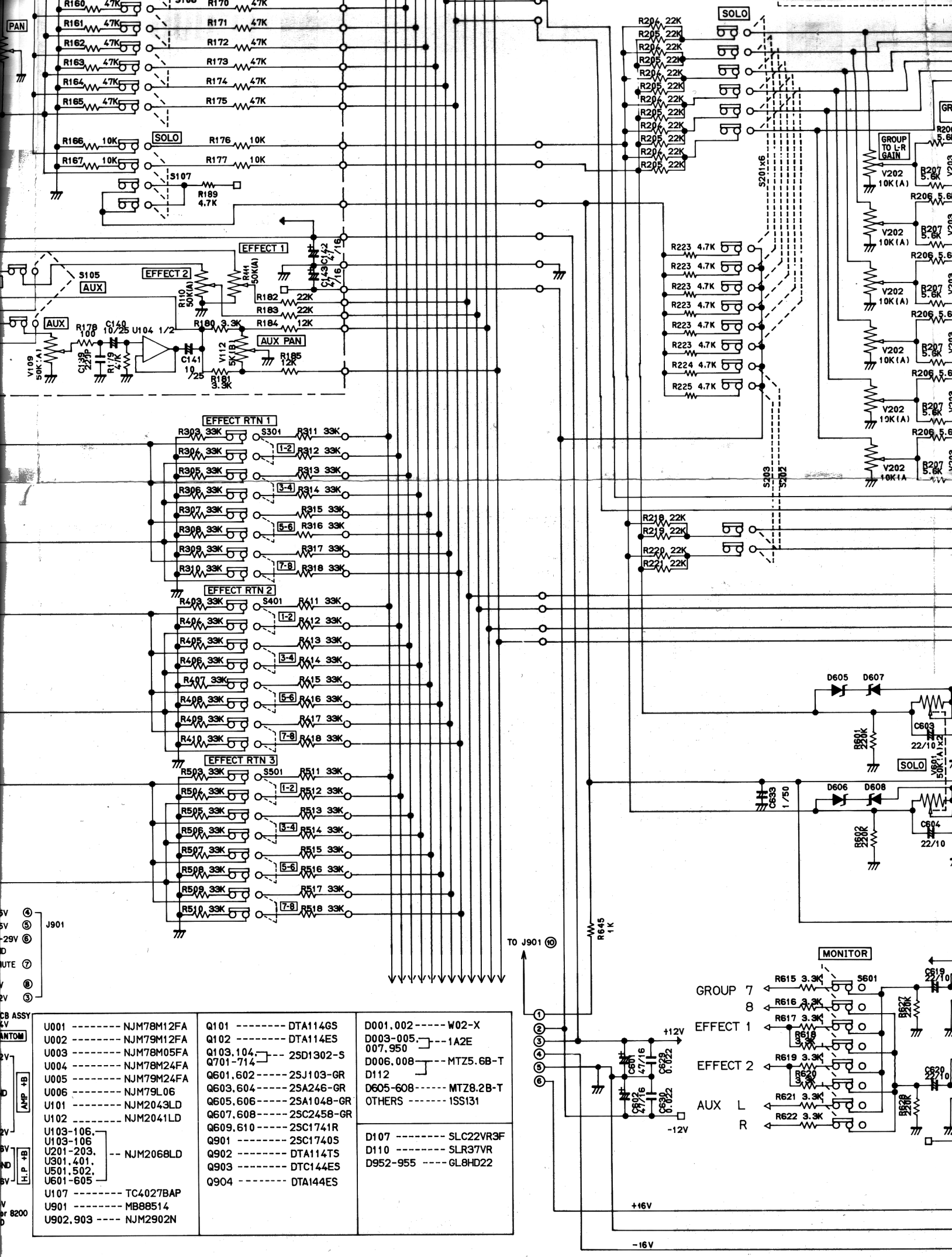

U001 -------- NJM78M12FA	Q101 -------- DTA114GS	D001,002 ----- W02-X
U002 -------- NJM79M12FA	Q102 -------- DTA114ES	D003-005, 007,950 ---- 1A2E
U003 -------- NJM78M05FA	Q103,104, Q701-714 --- 2SD1302-S	D006,008 D112 ---- MTZ5.6B-T
U004 -------- NJM78M24FA	Q601,602 ----- 2SJ103-GR	D605-608 ------ MTZ8.2B-T
U005 -------- NJM79M24FA	Q603,604 ----- 2SA246-GR	OTHERS -------- 1SS131
U006 -------- NJM79L06	Q605,606 ----- 2SA1048-GR	
U101 -------- NJM2043LD	Q607,608 ----- 2SC2458-GR	
U102 -------- NJM2041LD	Q609,610 ----- 2SC1741R	
U103-106, U103-106 U201-203, U301,401, U501,502, U601-605 -- NJM2068LD	Q901 -------- 2SC1740S	D107 -------- SLC22VR3F
U107 -------- TC4027BAP	Q902 -------- DTA114TS	D110 -------- SLR37VR
U901 -------- MB88514	Q903 -------- DTC144ES	D952-955 ---- GL8HD22
U902,903 ---- NJM2902N	Q904 -------- DTA144ES	

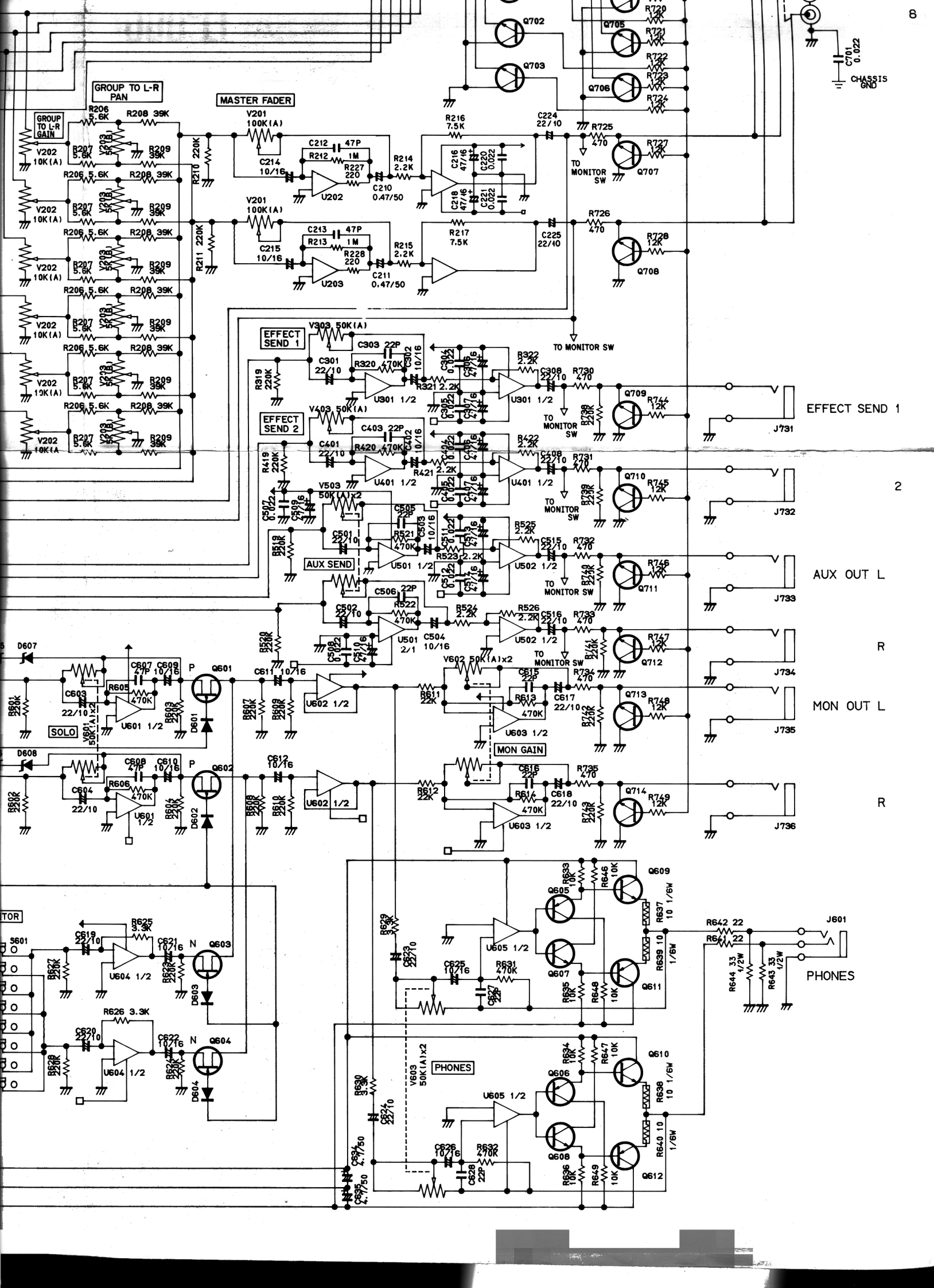
GROUP TO L-R PAN
GROUP TO L-R GAIN
MASTER FADER
EFFECT SEND 1
EFFECT SEND 2
AUX SEND
SOLO
MON GAIN
PHONES
TO MONITOR SW
CHASSIS GND
EFFECT SEND 1
AUX OUT L
R
MON OUT L
R
PHONES
J731
J732
J733
J734
J735
J736
J601

SCHEMATIC DIAGRAM
MODEL 812

NEW

This circuit diagram applies to 812 with the serial no.
in the vicinity of,

FCA : 0200671 and onwards
CSA : 0200758 and onwards
EUR : 0600686 and onwards
UK : 0700303 and onwards
DM : 1000384 and onwards

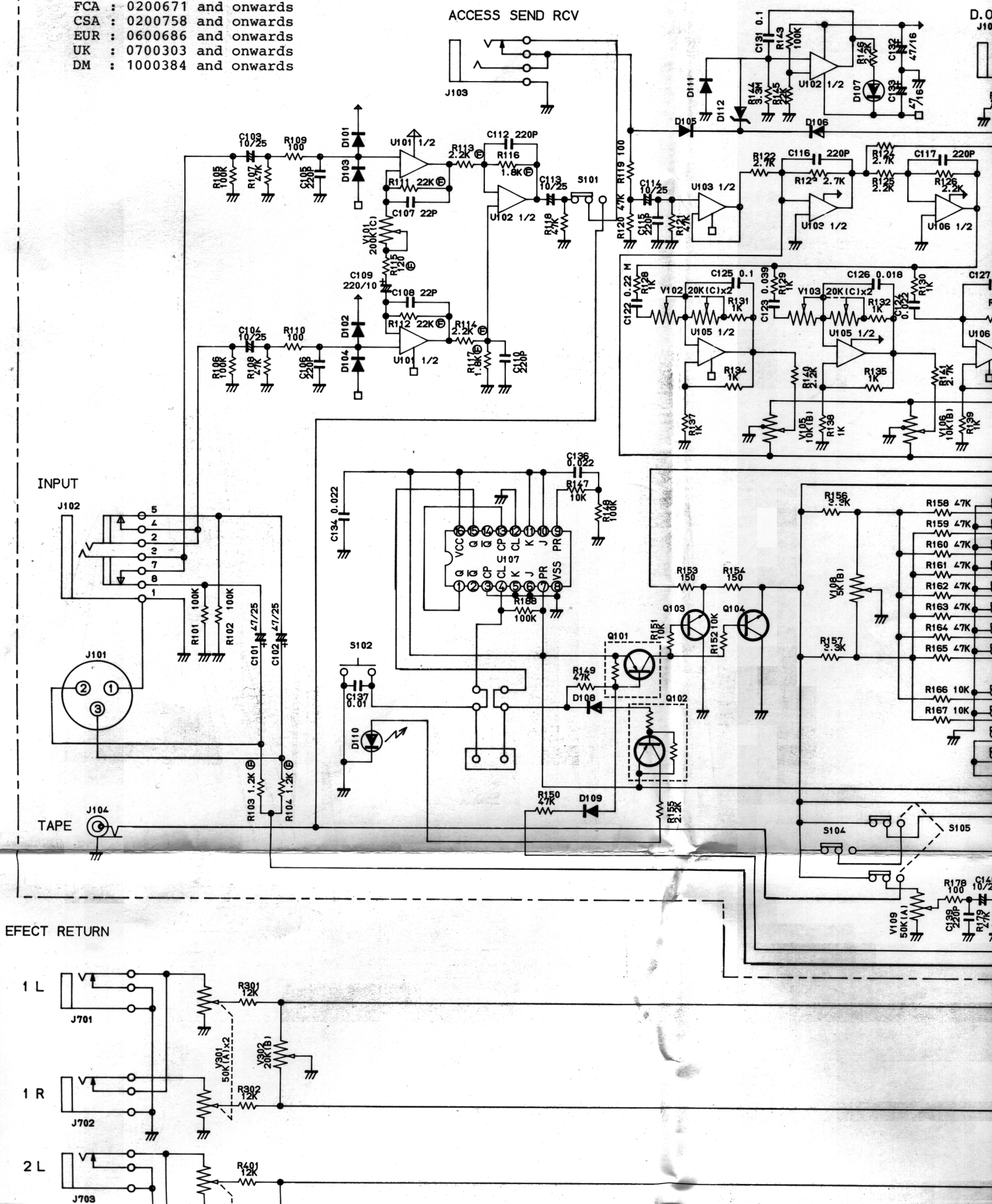

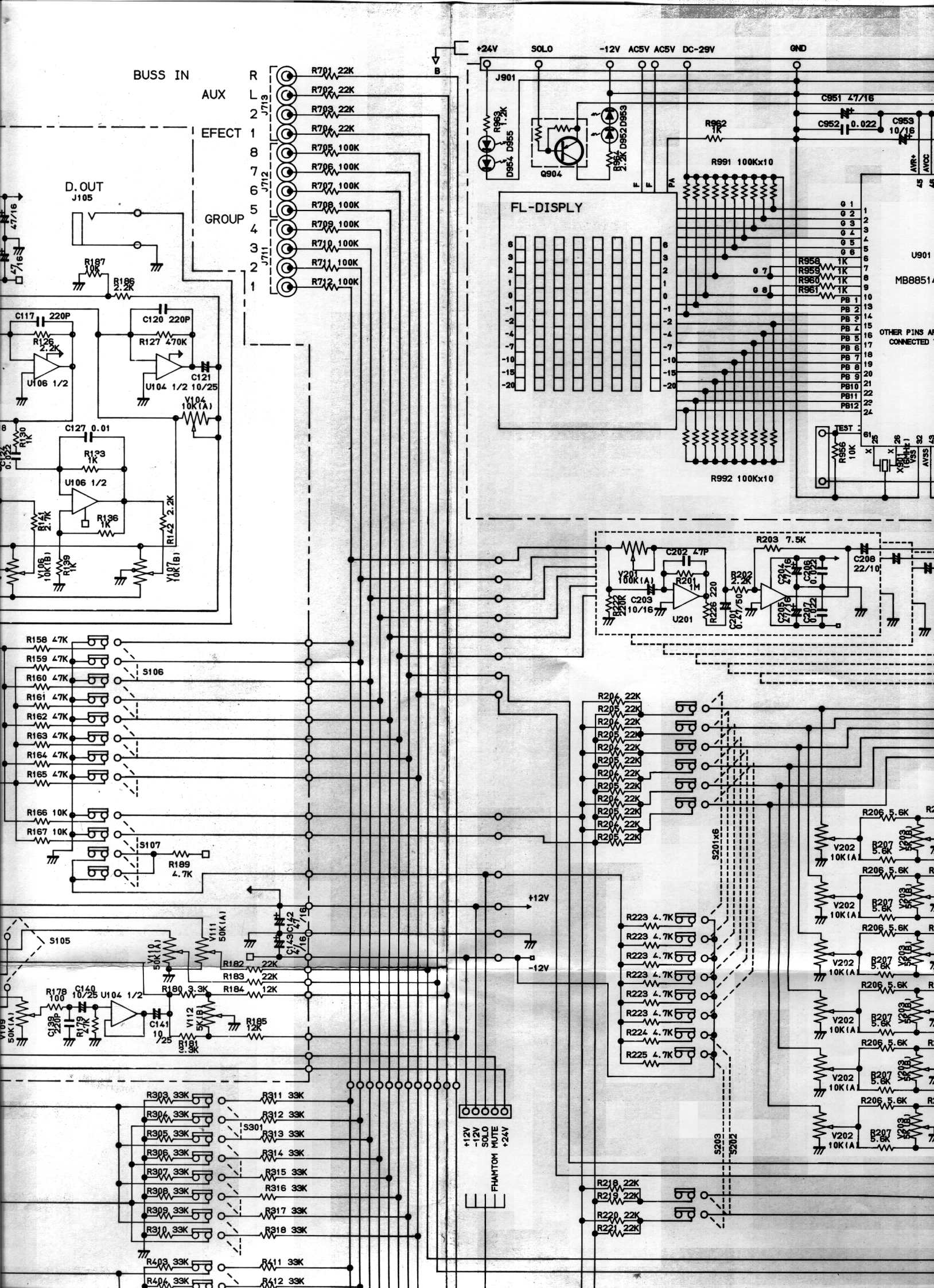
BUSS IN
AUX
EFECT
GROUP
R
L
D.OUT
J105
J713
J712
J711
R701 22K
R702 22K
R703 22K
R704 22K
R705 100K
R706 100K
R707 100K
R708 100K
R709 100K
R710 100K
R711 100K
R712 100K
+24V
SOLO
-12V
AC5V
AC5V
DC-29V
GND
J901
C951 47/16
C952 0.022
C953 10/16
R962 1K
R991 100Kx10
R992 100Kx10
FL-DISPLY
Q904
D954 D955
D952 D953
R963 1.2K
R964 2.2K
U901
MB8851
R956 1K
R957 1K
R958 1K
R959 1K
R960 1K
R961 1K
TEST
R956 10K
C117 220P
C120 220P
R126 2.2K
R127 470K
U106 1/2
U104 1/2
C121 10/25
V104 10K(A)
C127 0.01
R133 1K
R130 1K
R136 1K
R141 2.7K
R142 2.2K
V106 10K(B)
R139 1K
V107 10K(B)
R187 10K
R186 2.2K
C122 0.022
C203 10/16
R222 220K
R203 7.5K
C202 47P
V201 100K(A)
R201 1M
R202 2.2K
R226 220
C201 0.47/50
U201
C204 47/16
C205 0.022
C206 47/16
C207 0.022
C208 22/10
R158 47K
R159 47K
R160 47K
R161 47K
R162 47K
R163 47K
R164 47K
R165 47K
S106
R166 10K
R167 10K
S107
R189 4.7K
S105
V111 50K(A)
V110 50K(A)
C143 C142 4.7/16
+12V
-12V
R182 22K
R183 22K
R184 12K
R180 3.3K
R178 100
C140 10/25
U104 1/2
C139 220P
R179 2.7K
C141 10/25
V112 5K(B)
R185 12K
V109 50K(A)
R181 3.3K
R206 22K
R205 22K
R204 22K
S201x6
R223 4.7K
R224 4.7K
R225 4.7K
R206 5.6K
V202 10K(A)
R207 5.6K
V203 5K(B)
S203
S202
R303 33K
R304 33K
R305 33K
R306 33K
R307 33K
R308 33K
R309 33K
R310 33K
S301
R311 33K
R312 33K
R313 33K
R314 33K
R315 33K
R316 33K
R317 33K
R318 33K
R403 33K
R404 33K
R411 33K
R412 33K
+12V
-12V
SOLO
MUTE
+24V
PHANTOM
R218 22K
R219 22K
R220 22K
R221 22K

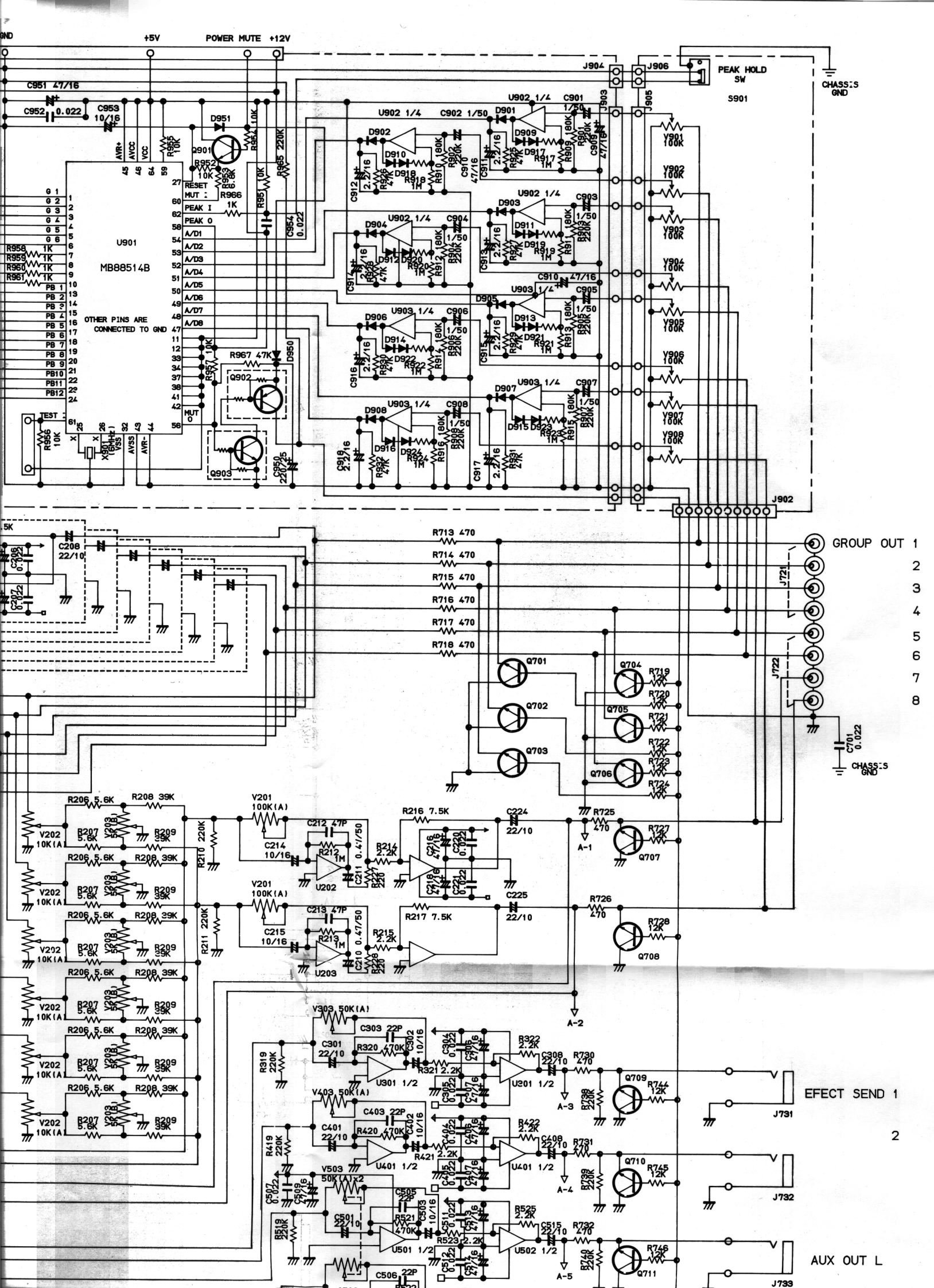
GND
+5V
POWER MUTE +12V
PEAK HOLD SW
S901
CHASSIS GND
J904
J906
J903
J905
J902
U901
MB88514B
OTHER PINS ARE CONNECTED TO GND
RESET
MUT :
PEAK I
PEAK O
MUT O
TEST
U902 1/4
U903 1/4
D901
D902
D903
D904
D905
D906
D907
D908
D909
D910
D911
D912
D913
D914
D915
D916
D917
D918
D919
D920
D921
D922
D923
D924
Q901
Q902
Q903
D951
D950
C951 47/16
C952 0.022
C953 10/16
C954 0.022
C955 220/25
C901 1/50
C902 1/50
C903 1/50
C904 1/50
C905 1/50
C906 1/50
C907 1/50
C908 1/50
C910 47/16
R951 10K
R952 10K
R953 10K
R954 220K
R955 10K
R956 10K
R957 1K
R958 1K
R959 1K
R960 1K
R961 1K
R966 1K
R967 47K
R968 47K
R969 47K
R970 47K
R971 47K
R972 47K
R973 47K
R974 47K
R975 47K
R976 47K
R977 47K
R978 47K
R979 47K
R980 47K
R981 47K
R982 47K
R983 47K
R984 47K
R985 47K
R986 47K
R987 47K
R988 47K
R989 47K
R990 47K
R991 47K
R992 47K
R993 47K
R994 47K
R995 47K
R996 47K
R997 47K
R998 47K
R999 47K
R900 220K
R901 180K
R902 180K
R903 180K
R904 180K
R905 180K
R906 180K
R907 180K
R908 180K
R909 180K
R910 180K
R911 180K
R912 180K
R913 180K
R914 180K
R915 180K
R916 180K
R917 1M
R918 1M
R919 1M
R920 1M
R921 1M
R922 1M
R923 1M
R924 1M
R925 47K
R926 47K
R927 47K
R928 47K
R929 47K
R930 47K
R931 47K
R932 47K
C911 2.2/16
C912 2.2/16
C913 2.2/16
C914 2.2/16
C915 2.2/16
C916 2.2/16
C917 2.2/16
C918 2.2/16
C919 2.2/16
C920 2.2/16
C921 2.2/16
C922 2.2/16
C923 2.2/16
C924 2.2/16
C925 2.2/16
C926 2.2/16
C927 2.2/16
C928 2.2/16
C929 2.2/16
C930 2.2/16
C931 2.2/16
C932 2.2/16
C933 2.2/16
C934 2.2/16
C935 2.2/16
C936 2.2/16
C937 2.2/16
C938 2.2/16
C939 2.2/16
C940 2.2/16
C941 2.2/16
C942 2.2/16
C943 2.2/16
C944 2.2/16
C945 2.2/16
C946 2.2/16
C947 2.2/16
C948 2.2/16
C949 2.2/16
C950 2.2/16
C951 2.2/16
C952 2.2/16
C953 2.2/16
C954 2.2/16
C955 2.2/16
C956 2.2/16
C957 2.2/16
C958 2.2/16
C959 2.2/16
C960 2.2/16
C961 2.2/16
C962 2.2/16
C963 2.2/16
C964 2.2/16
C965 2.2/16
C966 2.2/16
C967 2.2/16
C968 2.2/16
C969 2.2/16
C970 2.2/16
C971 2.2/16
C972 2.2/16
C973 2.2/16
C974 2.2/16
C975 2.2/16
C976 2.2/16
C977 2.2/16
C978 2.2/16
C979 2.2/16
C980 2.2/16
C981 2.2/16
C982 2.2/16
C983 2.2/16
C984 2.2/16
C985 2.2/16
C986 2.2/16
C987 2.2/16
C988 2.2/16
C989 2.2/16
C990 2.2/16
C991 2.2/16
C992 2.2/16
C993 2.2/16
C994 2.2/16
C995 2.2/16
C996 2.2/16
C997 2.2/16
C998 2.2/16
C999 2.2/16
C900 2.2/16
C901 2.2/16
C902 2.2/16
C903 2.2/16
C904 2.2/16
C905 2.2/16
C906 2.2/16
C907 2.2/16
C908 2.2/16
C909 2.2/16
C910 2.2/16

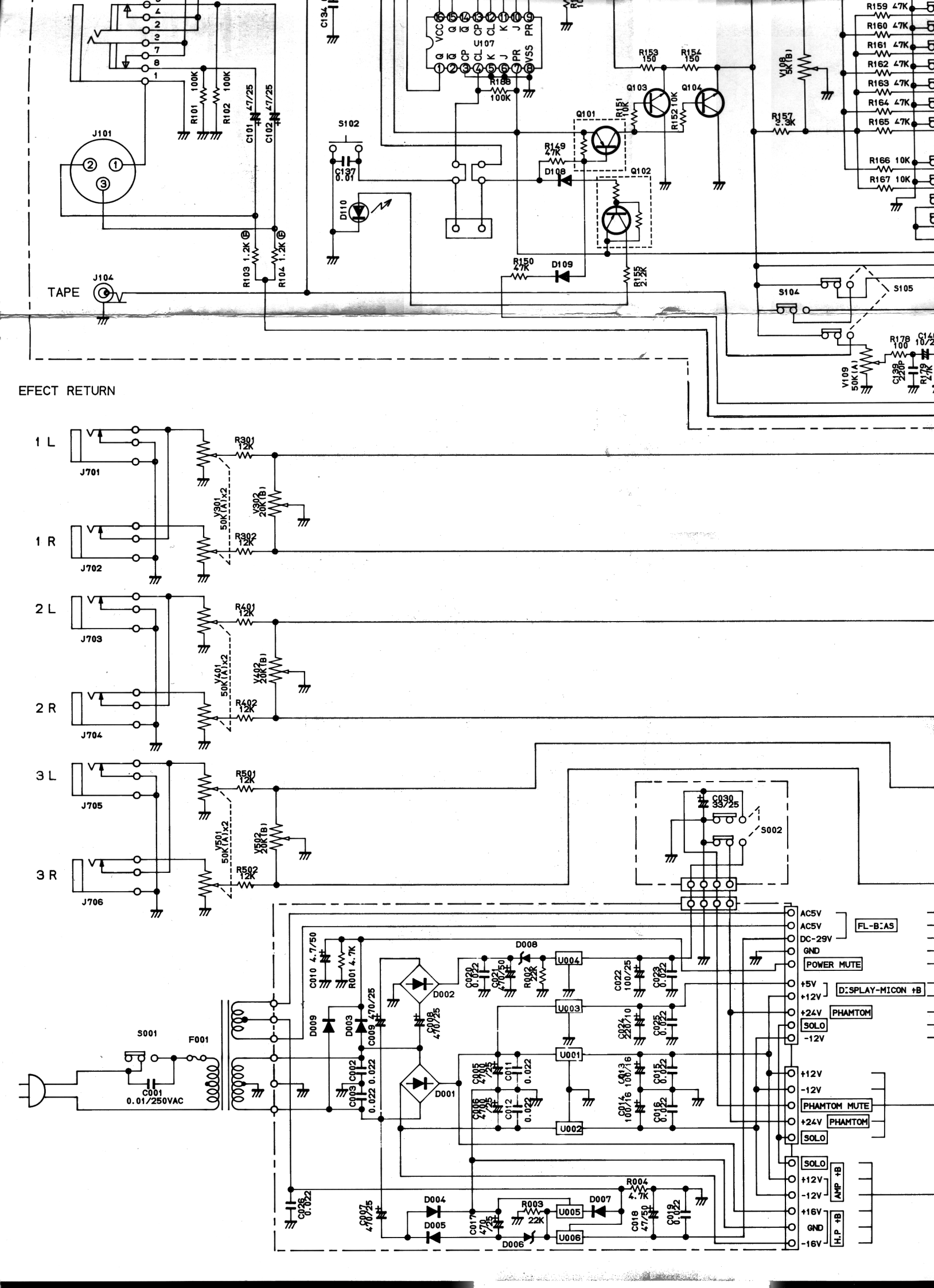
J101
R101 100K
R102 100K
C101 47/25
C102 47/25
R103 1.2K
R104 1.2K
J104
TAPE
S102
C137 0.01
D110
U107
R188 100K
R153 150
R154 150
Q103
Q104
Q101
Q102
R151 10K
R152 10K
R149 47K
D108
R150 47K
D109
R155 2.2K
R159 47K
R160 47K
R161 47K
R162 47K
R163 47K
R164 47K
R165 47K
R166 10K
R167 10K
V108 5K(B)
R157 3.3K
S104
S105
R178 100
V109 50K(A)
C139 220P
EFECT RETURN
1 L
J701
R301 12K
V301 50K(A)x2
V302 20K(B)
1 R
J702
R302 12K
2 L
J703
R401 12K
V401 50K(A)x2
V402 20K(B)
2 R
J704
R402 12K
3 L
J705
R501 12K
V501 50K(A)x2
V502 20K(B)
3 R
J706
R502 12K
C030 33/25
S002
S001
F001
C001 0.01/250VAC
C010 4.7/50
R001 4.7K
D002
D008
U004
U003
U001
U002
D009
D003
D001
C009 470/25
C008 470/25
C002 0.022
C003 0.022
C026 0.022
D004
D005
D006
D007
R003 22K
R004 4.7K
U005
U006
C017 47/25
C018 47/50
C019 0.022
AC5V
AC5V
DC-29V
GND
POWER MUTE
+5V
+12V
+24V
SOLO
-12V
+12V
-12V
PHAMTOM MUTE
+24V
PHAMTOM
SOLO
SOLO
+12V
-12V
+16V
GND
-16V
FL-BIAS
DISPLAY-MICON +B
PHAMTOM
AMP +B
H.P +B

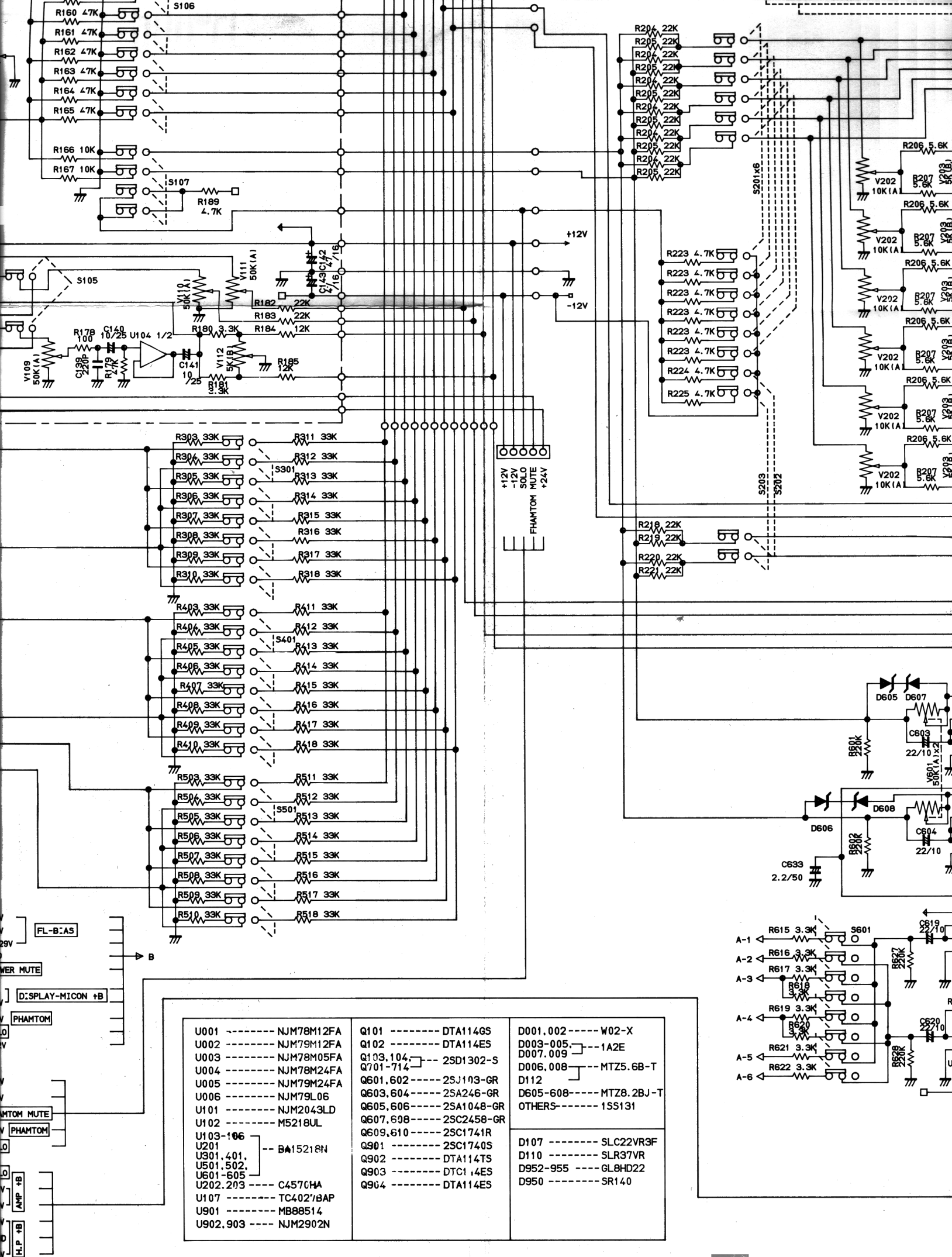

U001 -------- NJM78M12FA	Q101 -------- DTA114GS	D001,002 ----- W02-X
U002 -------- NJM79M12FA	Q102 -------- DTA114ES	D003-005, D007,009 --- 1A2E
U003 -------- NJM78M05FA	Q103,104, Q701-714 --- 2SD1302-S	D006,008 --- MTZ5.6B-T
U004 -------- NJM78M24FA	Q601,602 ----- 2SJ103-GR	D112
U005 -------- NJM79M24FA	Q603,604 ----- 2SA246-GR	D605-608 ----- MTZ8.2BJ-T
U006 -------- NJM79L06	Q605,606 ----- 2SA1048-GR	OTHERS ------- 1SS131
U101 -------- NJM2043LD	Q607,608 ----- 2SC2458-GR	
U102 -------- M5218UL	Q609,610 ----- 2SC1741R	
U103-106, U201, U301,401, U501,502, U601-605 -- BA15218N	Q901 -------- 2SC1740S	D107 -------- SLC22VR3F
U202,203 ---- C4570HA	Q902 -------- DTA114TS	D110 -------- SLR37VR
U107 -------- TC402?BAP	Q903 -------- DTC114ES	D952-955 ---- GL8HD22
U901 -------- MB88514	Q904 -------- DTA114ES	D950 -------- SR140
U902,903 ---- NJM2902N		

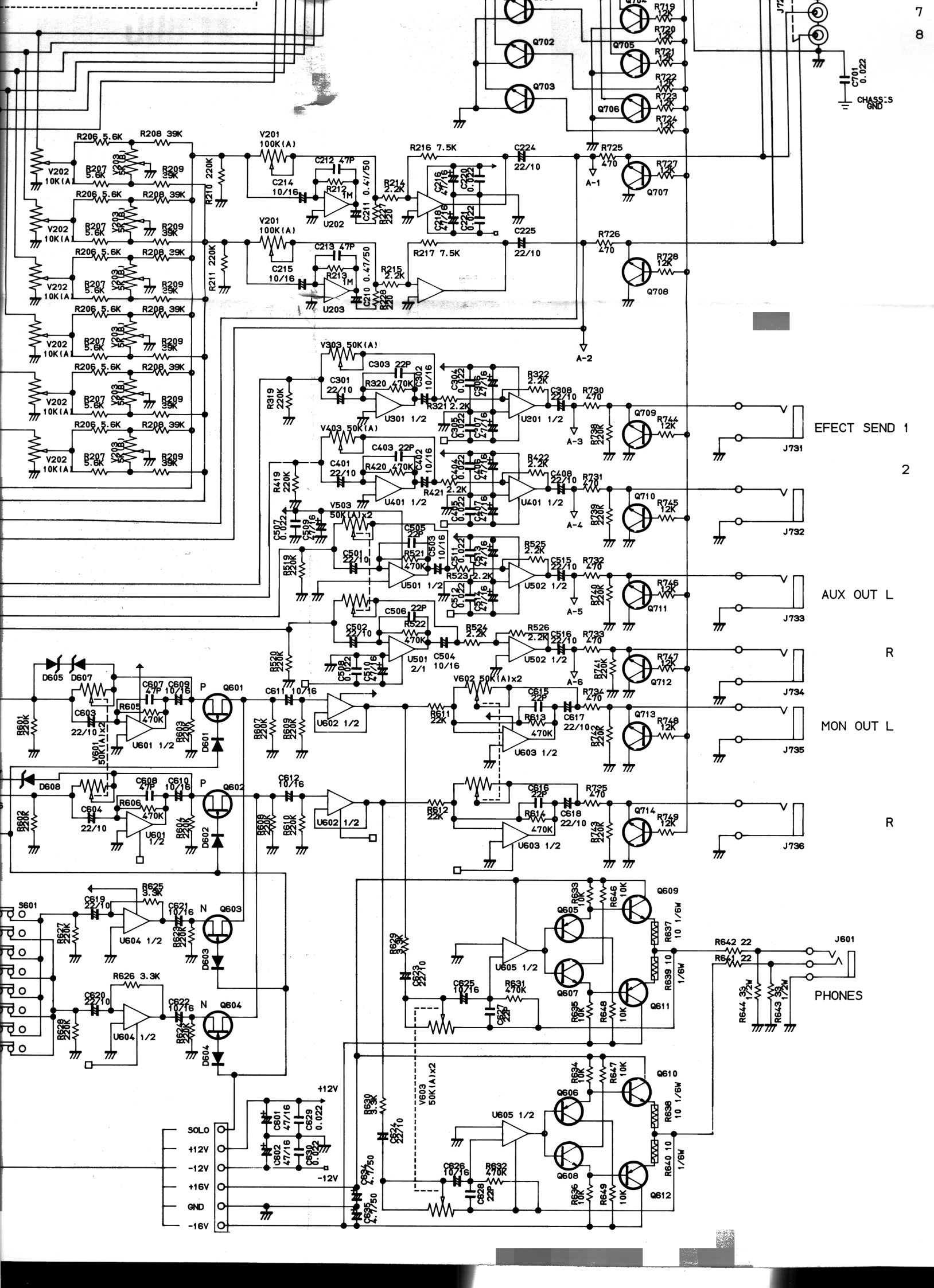
EFECT SEND 1
2
AUX OUT L
R
MON OUT L
R
PHONES
CHASSIS GND
SOLO
+12V
-12V
+16V
GND
-16V