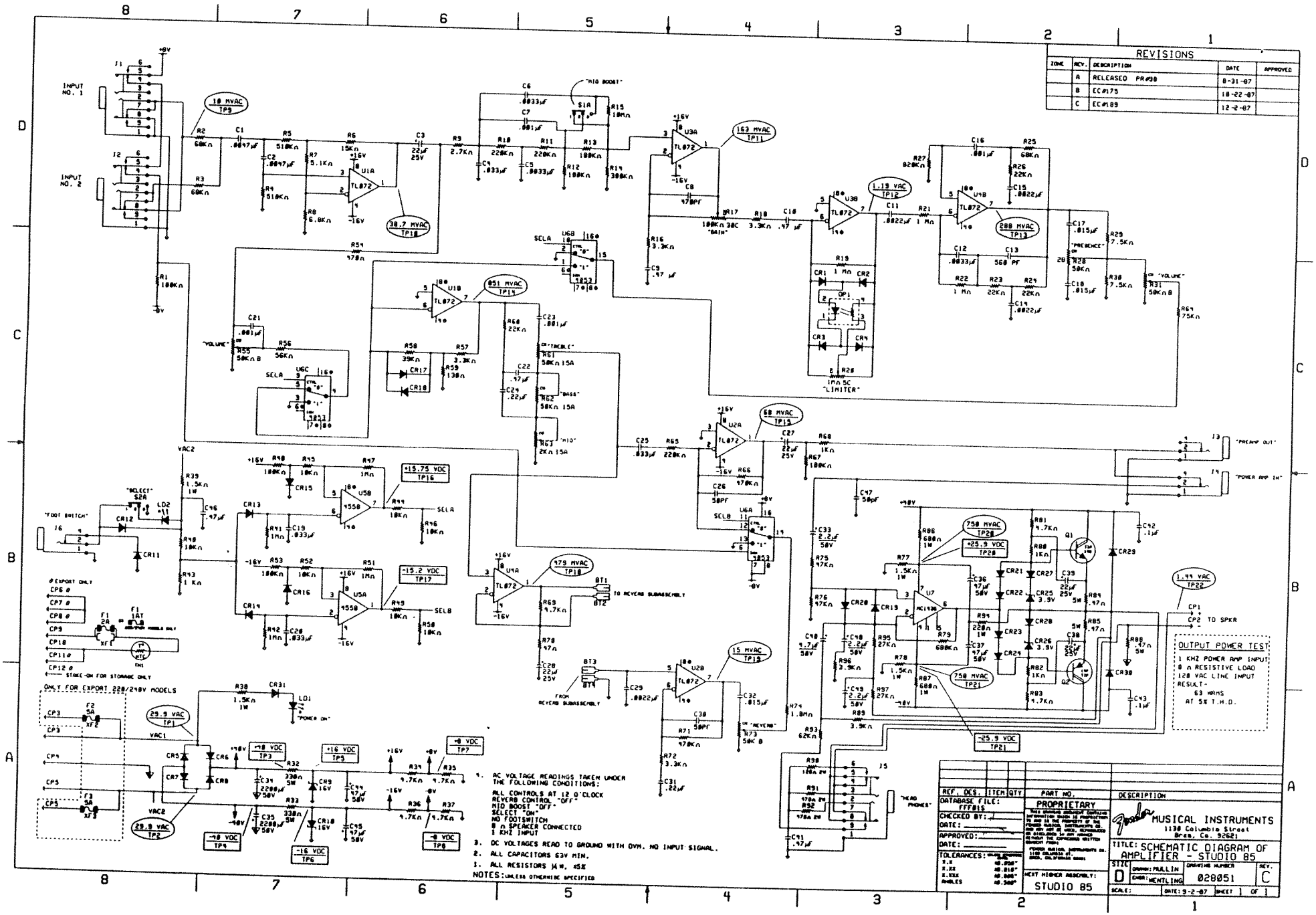
REVISIONS
ZONE | REV. | DESCRIPTION | DATE | APPROVED
A | RELEASED PR#98 | 8-31-87
B | EC#175 | 10-22-87
C | EC#189 | 12-2-87
INPUT NO. 1
INPUT NO. 2
"MID BOOST"
"BASS"
"TREBLE"
"MID"
"VOLUME"
"PRESENCE"
"LIMITER"
"REVERB"
"PREAMP OUT"
"POWER AMP IN"
"FOOT SWITCH"
"SELECT"
"POWER ON"
TO REVERB SUBASSEMBLY
FROM REVERB SUBASSEMBLY
"HEAD PHONES"
OUTPUT POWER TEST
1 KHZ POWER AMP INPUT
8 Ω RESISTIVE LOAD
120 VAC LINE INPUT
RESULT-
63 WRMS
AT 5% T.H.D.
ONLY FOR EXPORT 220/240V MODELS
TO SPKR
1. AC VOLTAGE READINGS TAKEN UNDER THE FOLLOWING CONDITIONS:
ALL CONTROLS AT 12 O'CLOCK
REVERB CONTROL "OFF"
MID BOOST "OFF"
SELECT "ON"
NO FOOTSWITCH
8 Ω SPEAKER CONNECTED
1 KHZ INPUT
2. ALL CAPACITORS 63V MIN.
3. ALL RESISTORS ¼W, ±5%
NOTES: UNLESS OTHERWISE SPECIFIED
PROPRIETARY
Fender MUSICAL INSTRUMENTS
1130 Columbia Street
Brea, Ca. 92621
TITLE: SCHEMATIC DIAGRAM OF AMPLIFIER - STUDIO 85
SIZE D
DRAWN: MULLIN
CHKR: MCNTLNG
DRAWING NUMBER 028051
REV. C
SCALE:
DATE: 9-2-87
SHEET 1 OF 1
NEXT HIGHER ASSEMBLY: STUDIO 85
DATABASE FILE: FF815
CHECKED BY:
DATE:
APPROVED:
DATE:
TOLERANCES:
REF. DES. | ITEM | QTY | PART NO. | DESCRIPTION