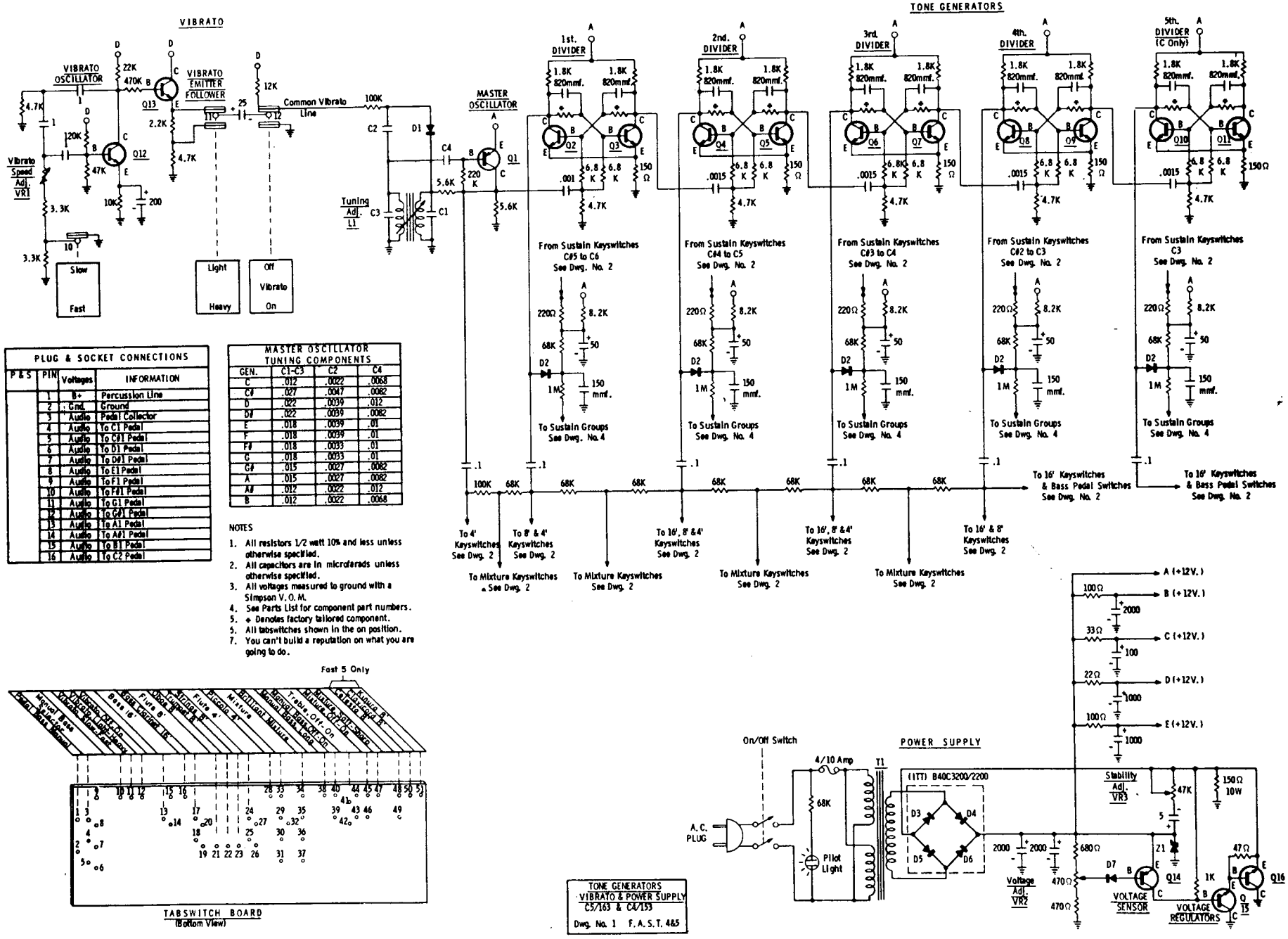

PLUG & SOCKET CONNECTIONS			
P&S	PIN	Voltages	INFORMATION
	1	B+	Percussion Line
	2	Gnd.	Ground
	3	Audio	Pedal Collector
	4	Audio	To C1 Pedal
	5	Audio	To C#1 Pedal
	6	Audio	To D1 Pedal
	7	Audio	To D#1 Pedal
	8	Audio	To E1 Pedal
	9	Audio	To F1 Pedal
	10	Audio	To F#1 Pedal
	11	Audio	To G1 Pedal
	12	Audio	To G#1 Pedal
	13	Audio	To A1 Pedal
	14	Audio	To A#1 Pedal
	15	Audio	To B1 Pedal
	16	Audio	To C2 Pedal

MASTER OSCILLATOR TUNING COMPONENTS			
GEN.	C1-C3	C2	C4
C	.012	.0022	.0068
C#	.027	.0047	.0082
D	.022	.0039	.012
D#	.022	.0039	.0082
E	.018	.0039	.01
F	.018	.0039	.01
F#	.018	.0033	.01
G	.018	.0033	.01
G#	.015	.0027	.0082
A	.015	.0027	.0082
A#	.012	.0022	.012
B	.012	.0022	.0068

NOTES

1. All resistors 1/2 watt 10% and less unless otherwise specified.
2. All capacitors are in microfarads unless otherwise specified.
3. All voltages measured to ground with a Simpson V.O.M.
4. See Parts List for component part numbers.
5. ◆ Denotes factory tailored component.
5. All tabswitches shown in the on position.
7. You can't build a reputation on what you are going to do.

TONE GENERATORS VIBRATO & POWER SUPPLY C5/163 & C4/153
Dwg. No. 1 F.A.S.T. 485