
EV

# Electro Voice MT 4

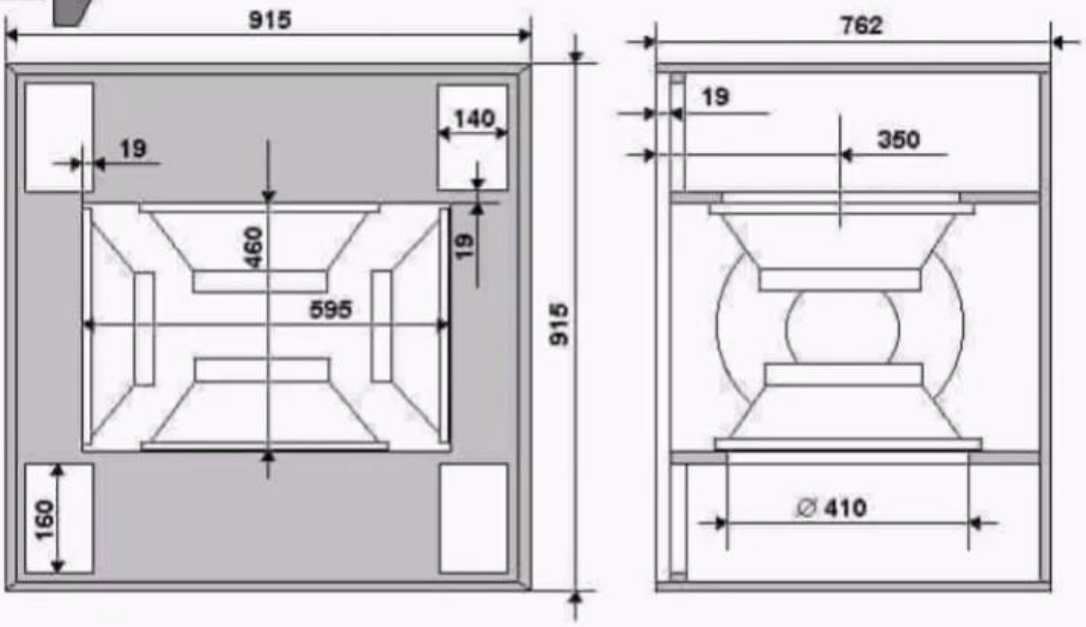


**40-225 Hz**

**Crossower freq.: 160 Hz**

**1W/1m = 102 dB**

**4 x EVM 18 B**

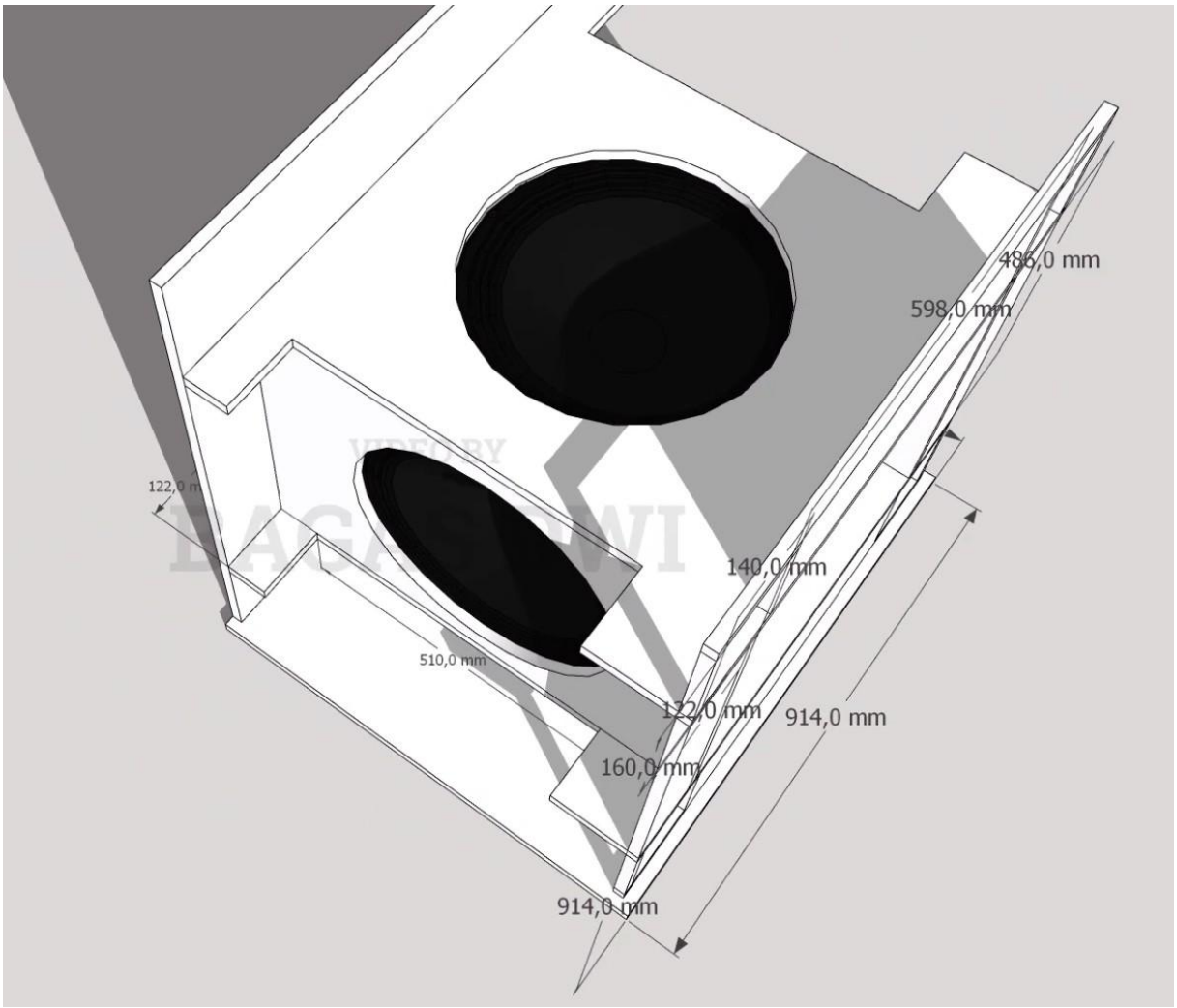
486,0 mm
598,0 mm
122,0 mm
140,0 mm
510,0 mm
122,0 mm
914,0 mm
160,0 mm
914,0 mm

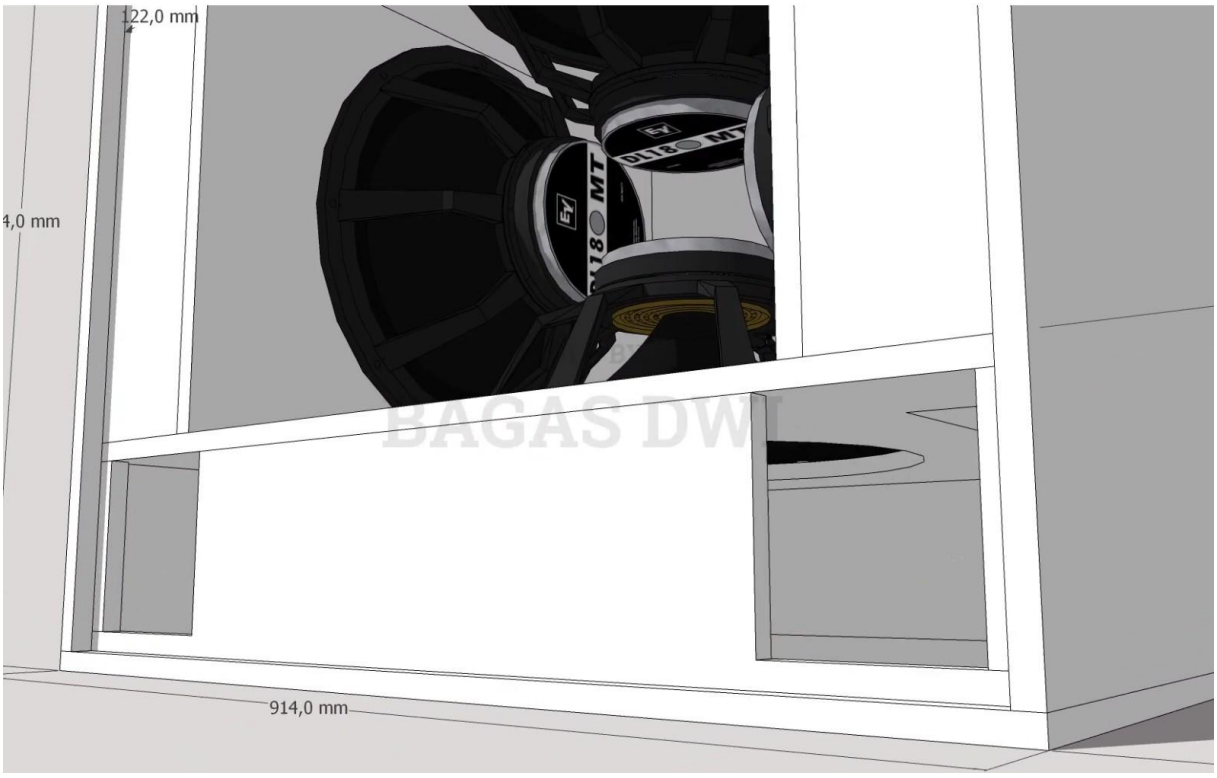
122,0 mm
914,0 mm

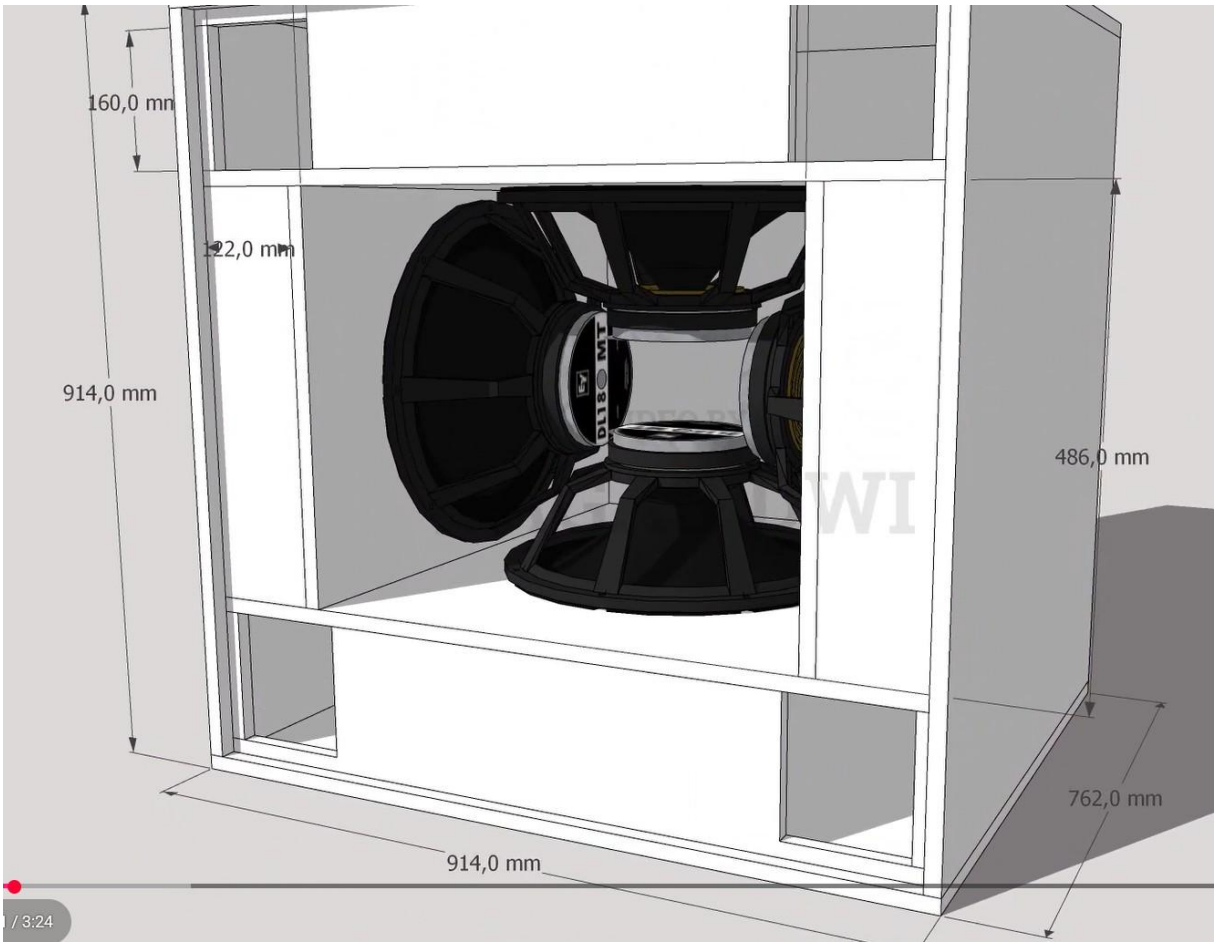
160,0 mm
122,0 mm
914,0 mm
486,0 mm
762,0 mm
914,0 mm
DL18 MT
/ 3:24

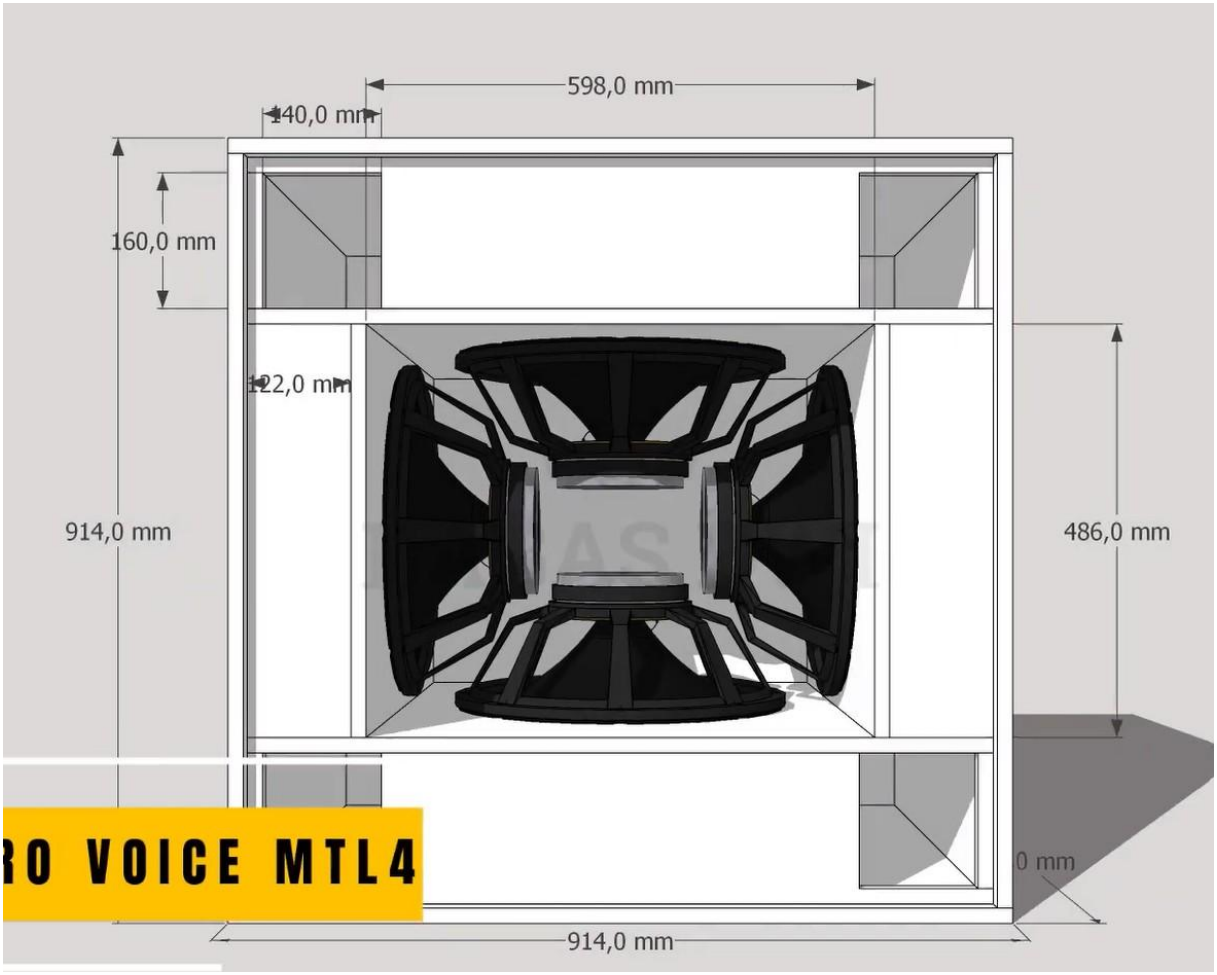


RO VOICE MTL4

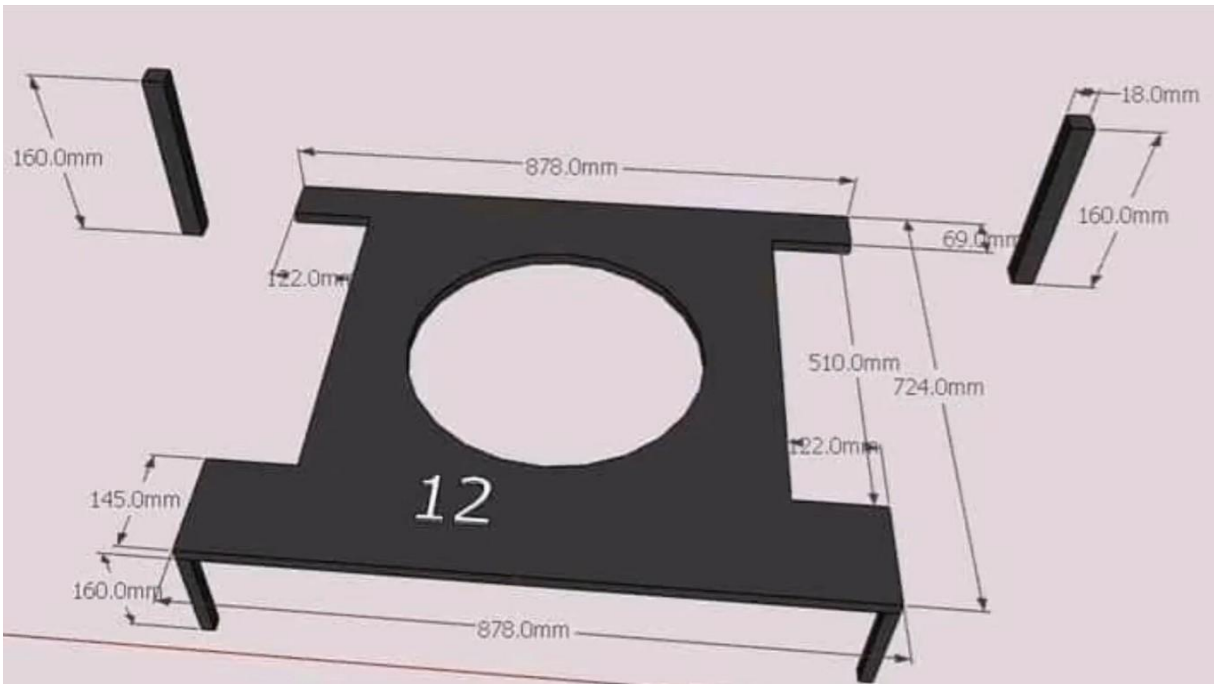

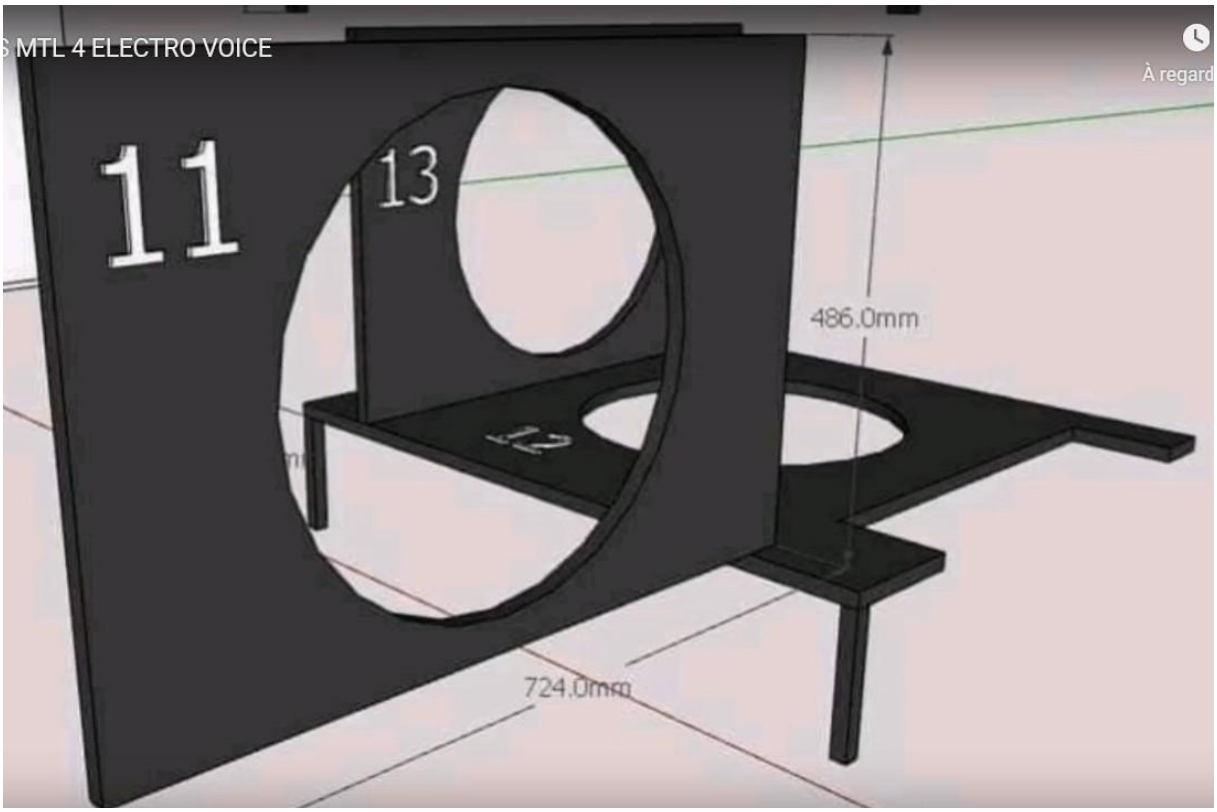
MTL 4 ELECTRO VOICE
À regard
11
13
12
486.0mm
724.0mm

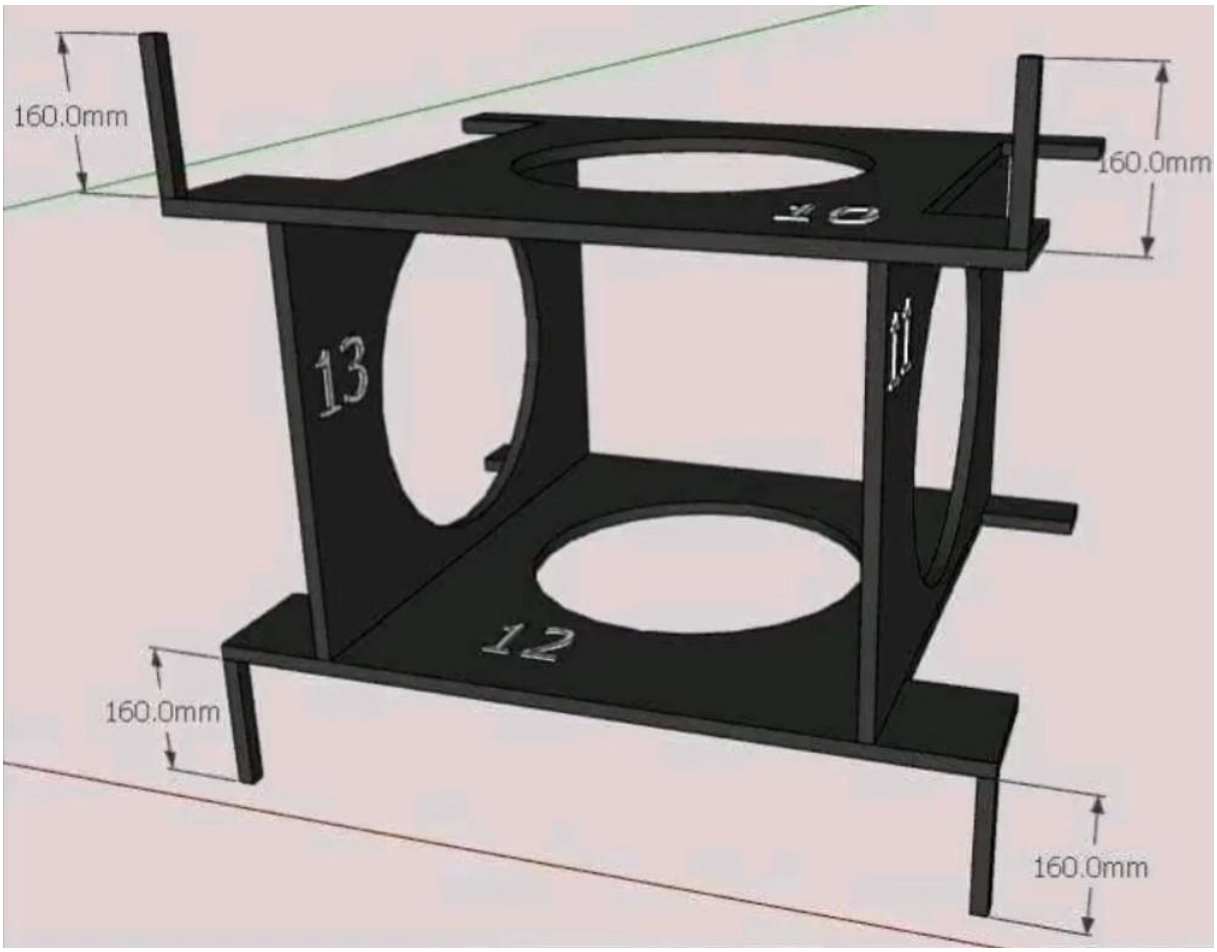
160.0mm
160.0mm
10
13
11
12
160.0mm
160.0mm

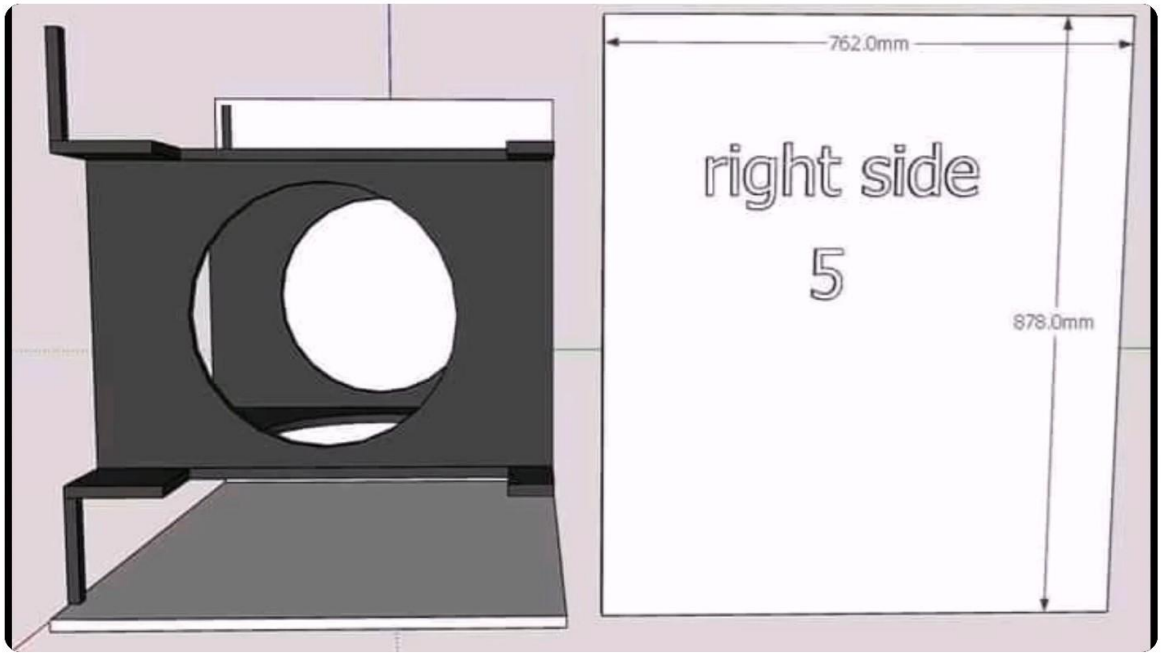
762.0mm
right side
5
878.0mm

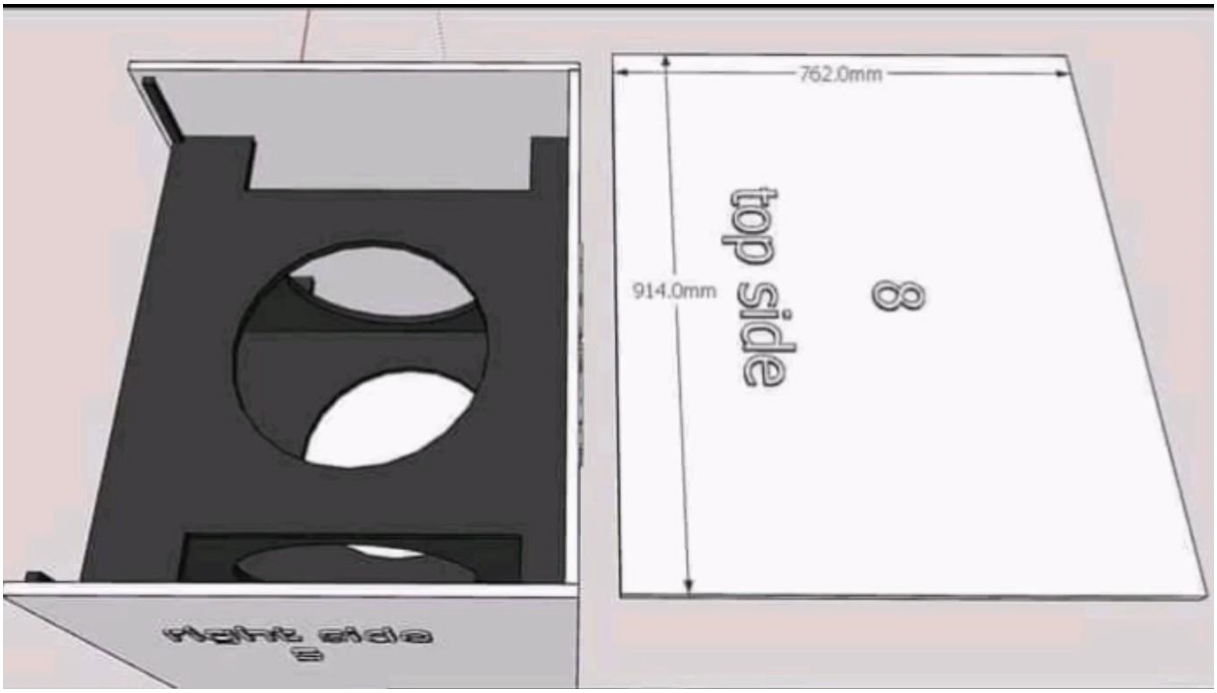
762.0mm
914.0mm
top side
8
right side
5

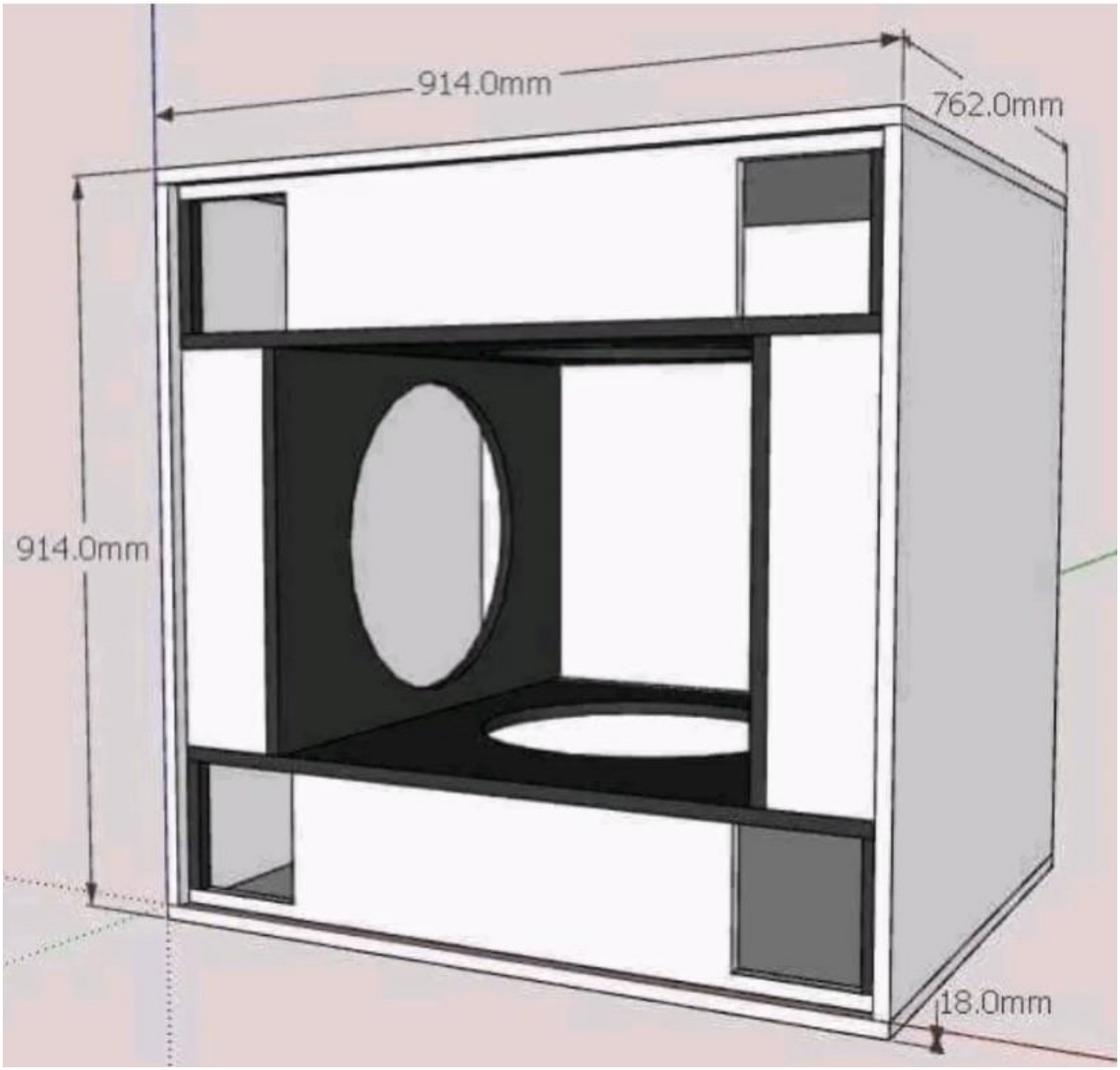
914.0mm
762.0mm
914.0mm
18.0mm

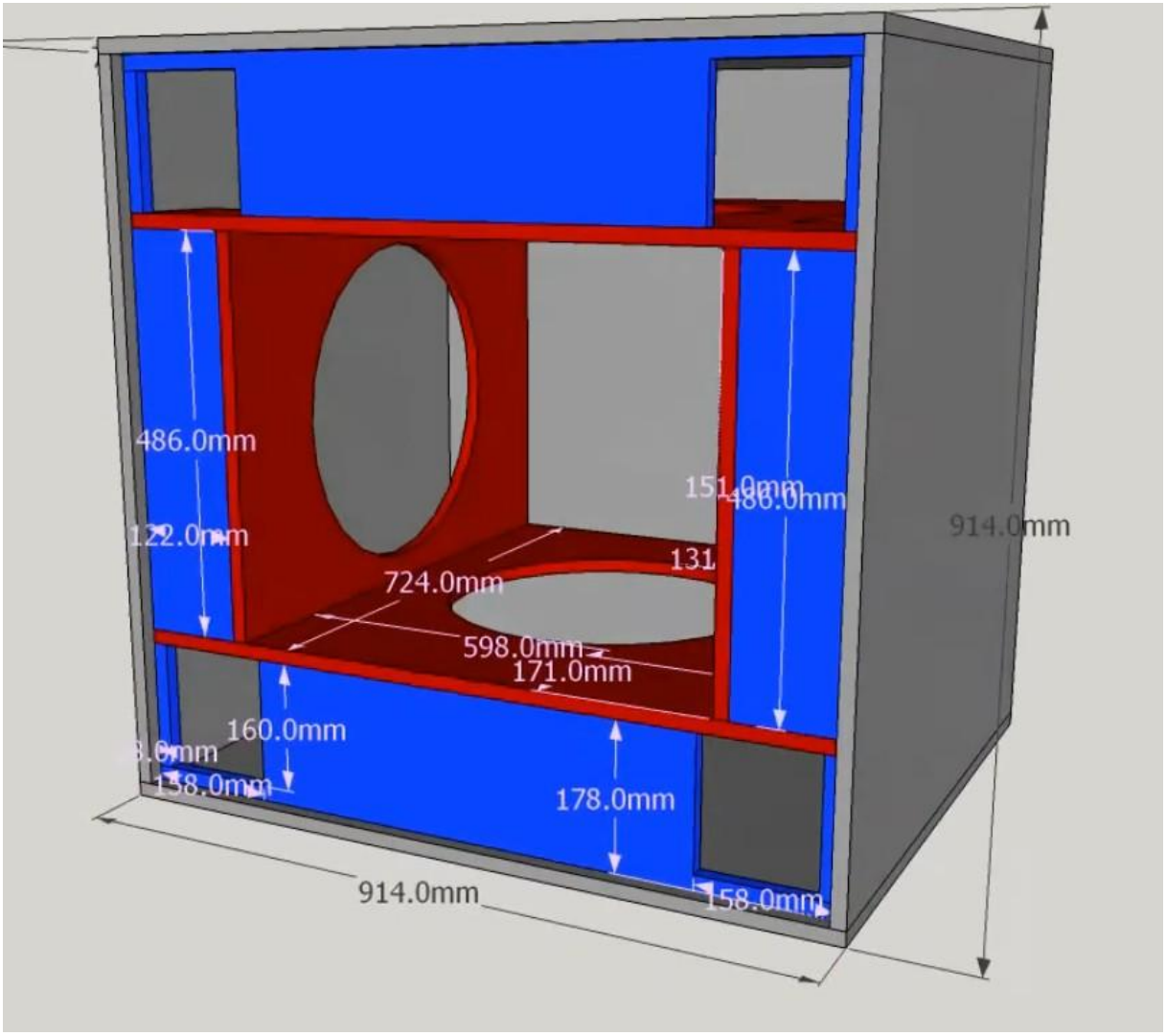
486.0mm
151.0mm
486.0mm
914.0mm
724.0mm
598.0mm
171.0mm
160.0mm
178.0mm
914.0mm
158.0mm

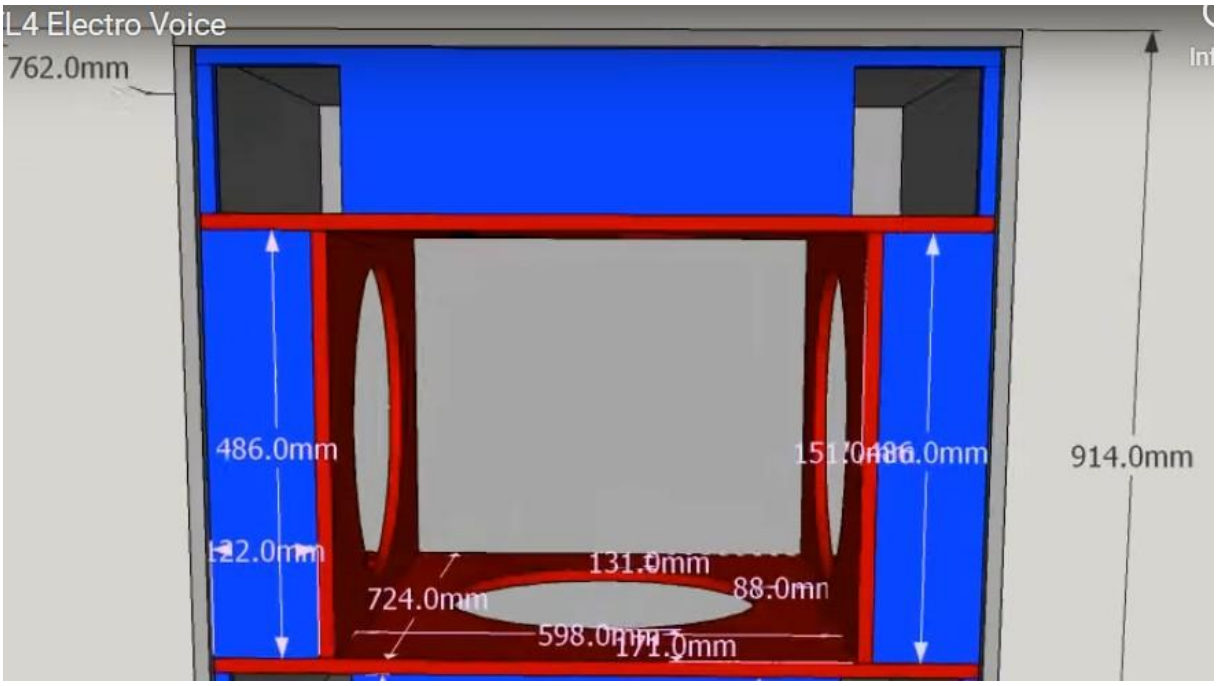
L4 Electro Voice
762.0mm
486.0mm
914.0mm
724.0mm
598.0mm
171.0mm

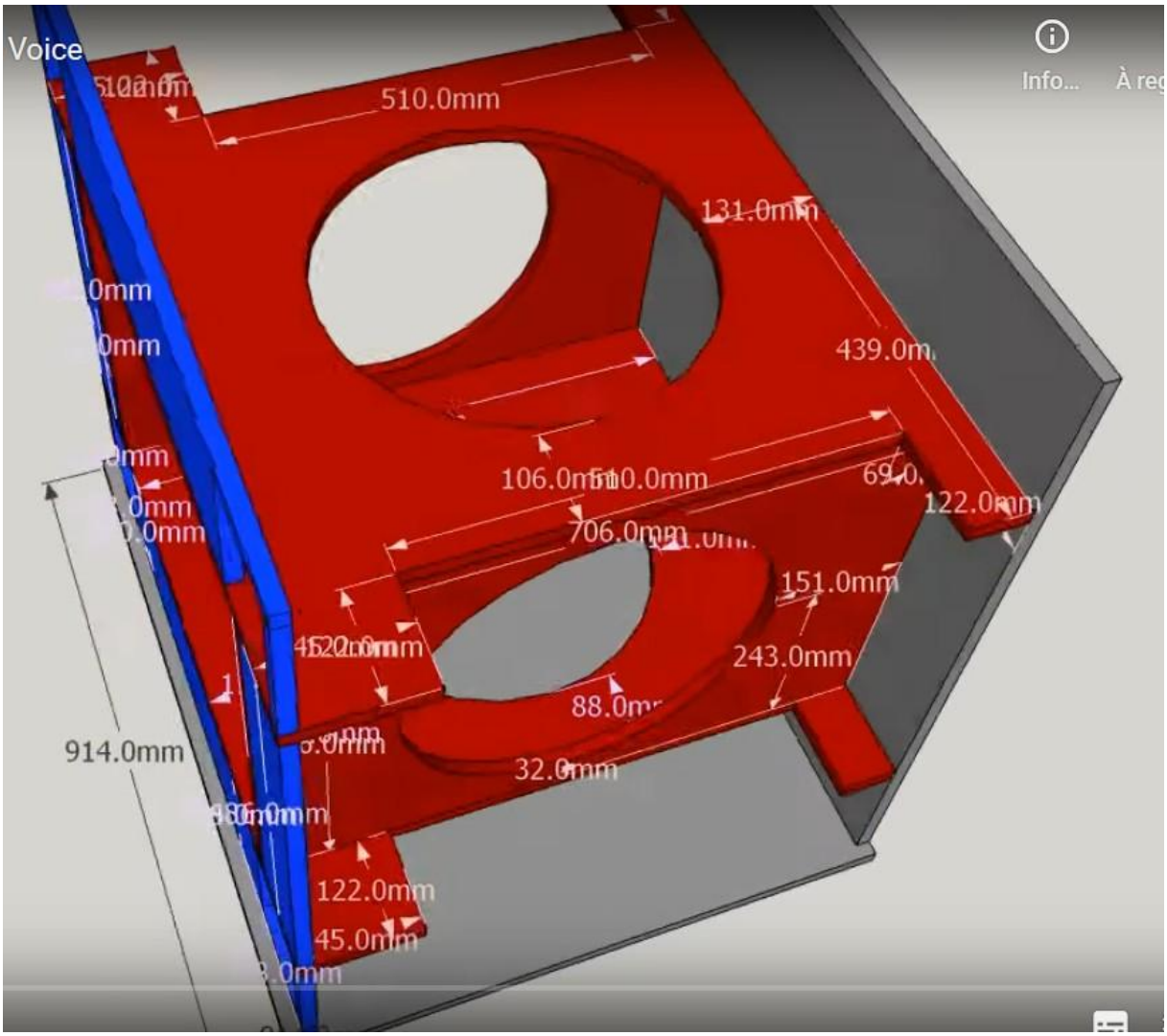
Voice
Info...
510.0mm
131.0mm
439.0m
106.0mm
510.0mm
122.0mm
706.0mm
151.0mm
243.0mm
914.0mm
32.0mm
122.0mm
45.0mm

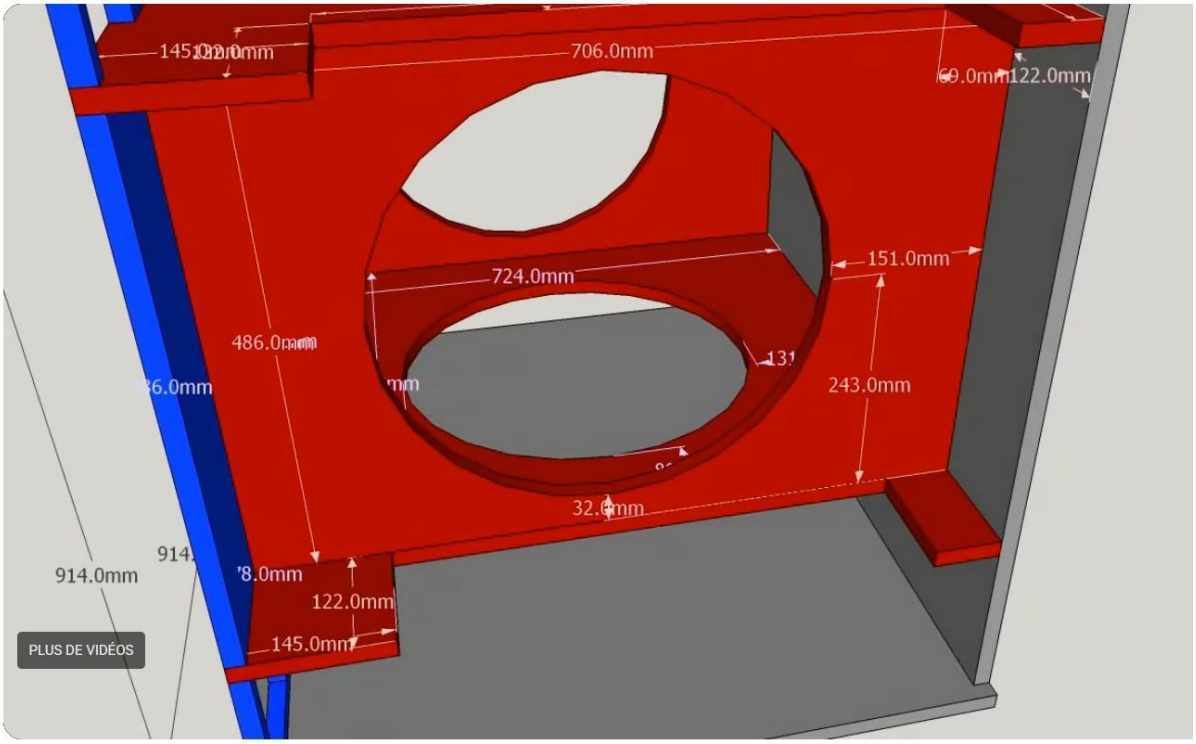
706.0mm
122.0mm
724.0mm
151.0mm
243.0mm
914.0mm
122.0mm
145.0mm
PLUS DE VIDÉOS