© 2010 Equinox Systems LLC Rev B 20100727

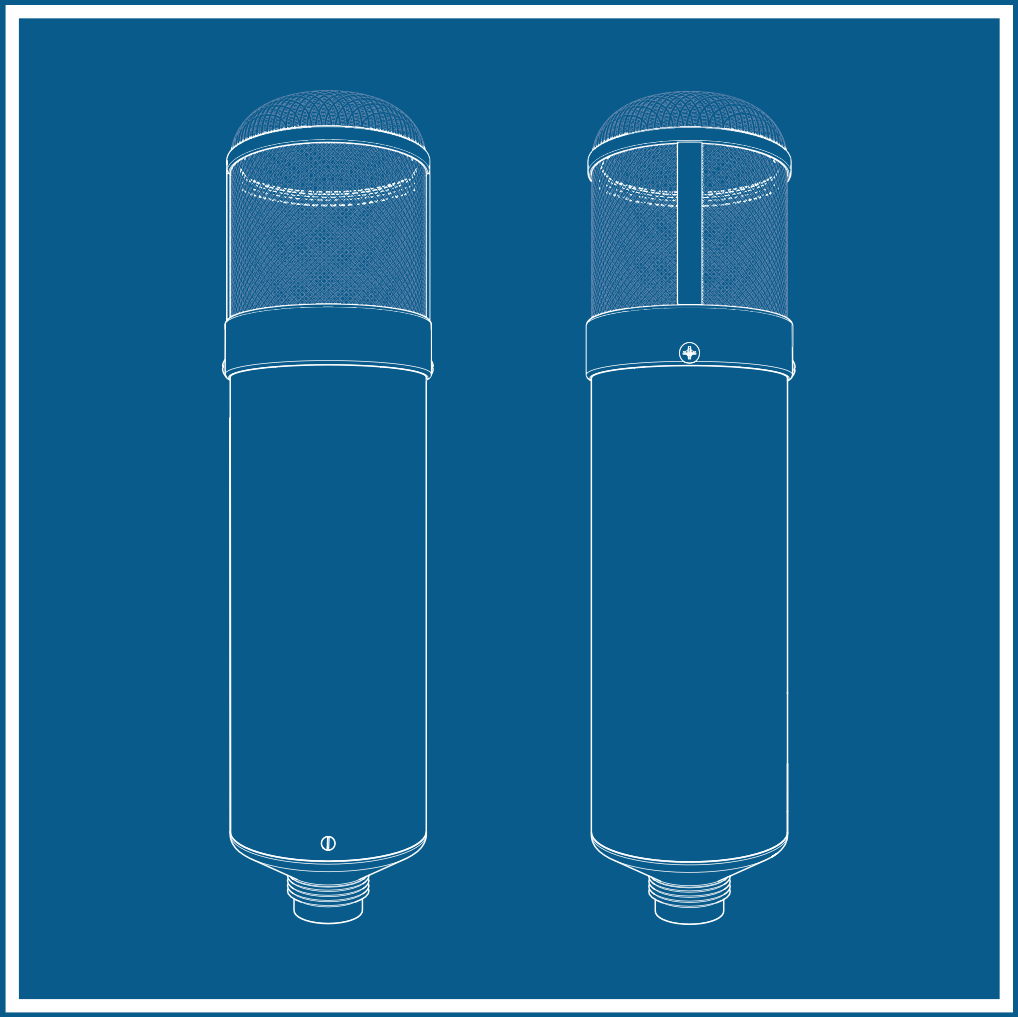

equinox systems

EQU47

Microphone Body Manual

In the Box

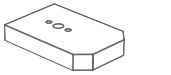

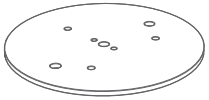

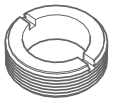

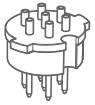

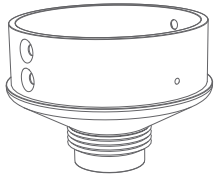



x 2

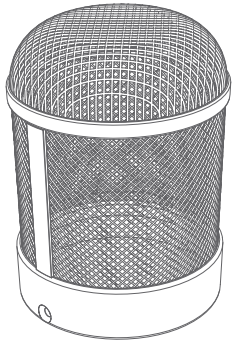

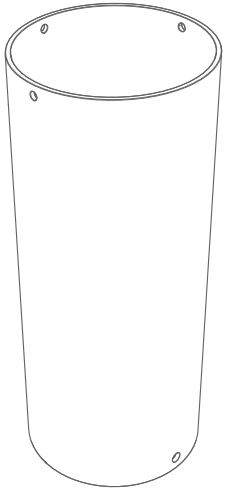

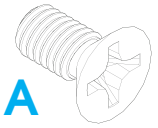

A x 4

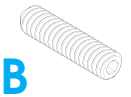

B x 2

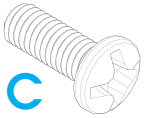

C x 2

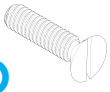

D x 1

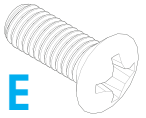

E x 3

Assembly

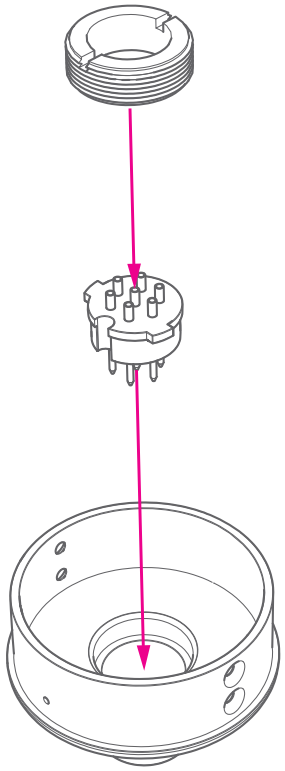

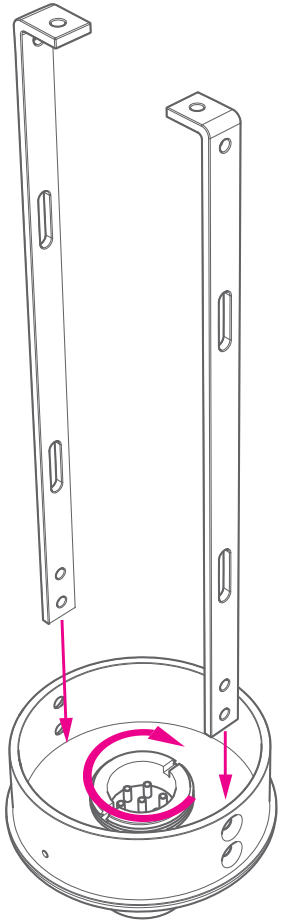

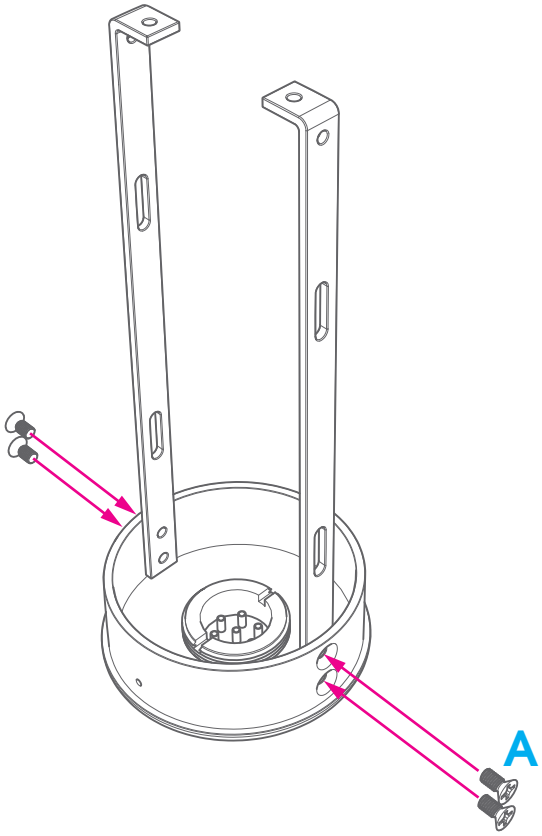

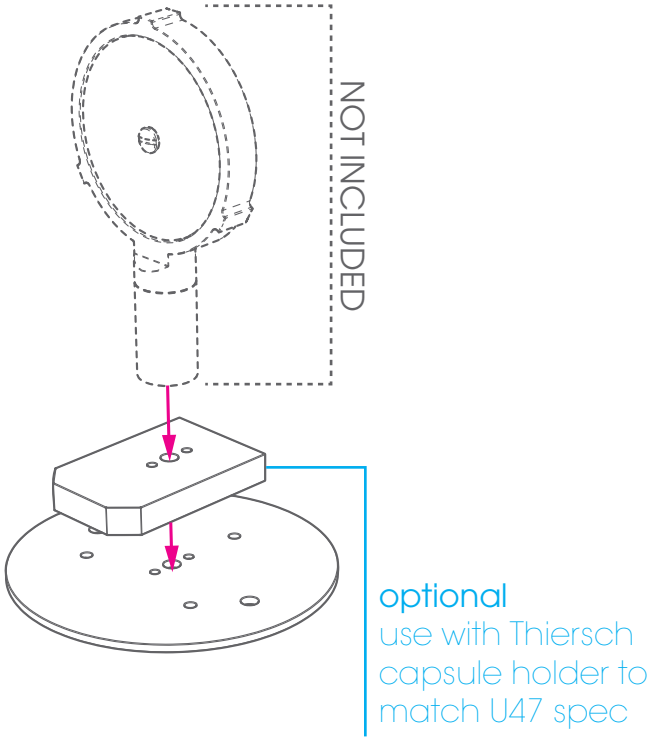
NOT INCLUDED
optional
use with Thiersch
capsule holder to
match U47 spec

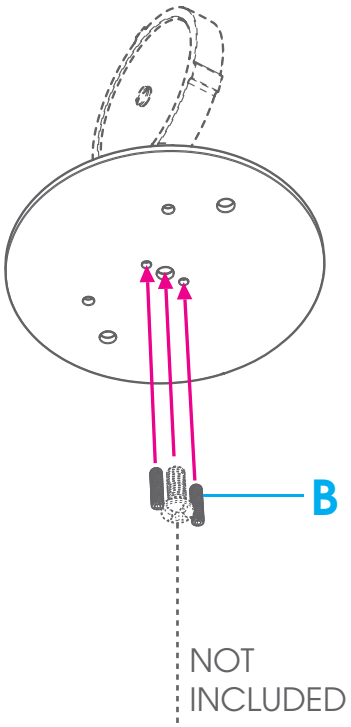
B
NOT
INCLUDED

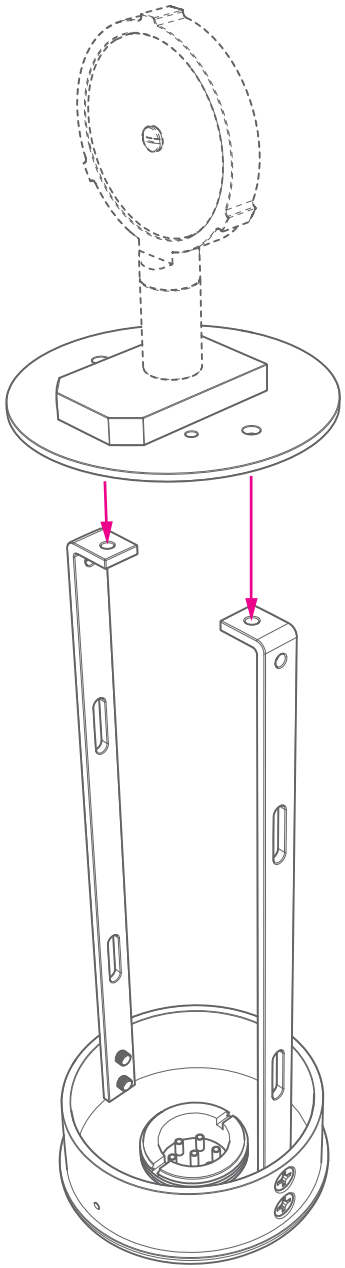

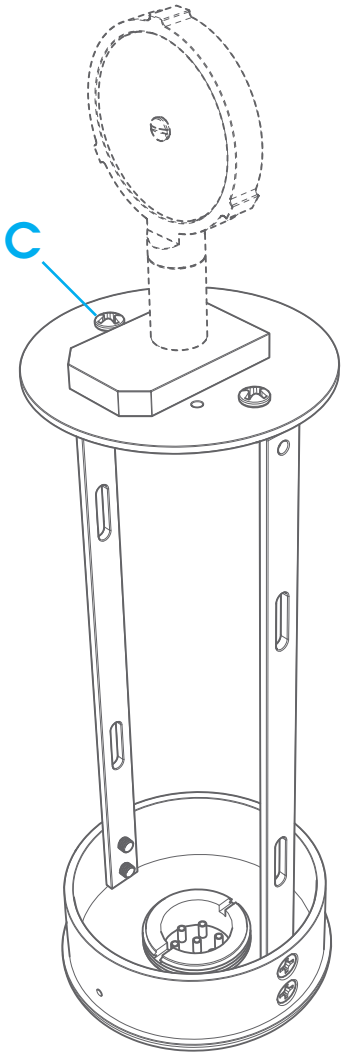
C

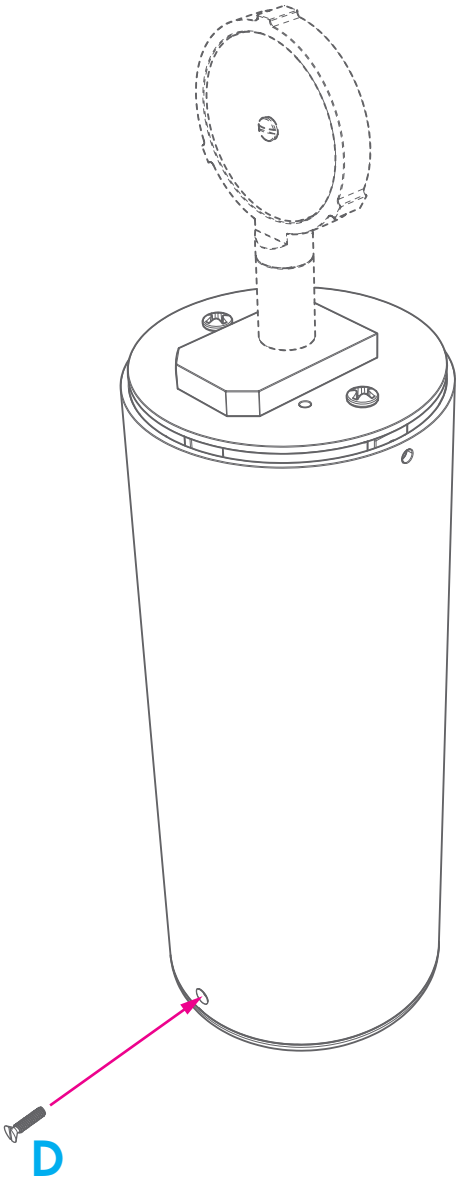
D

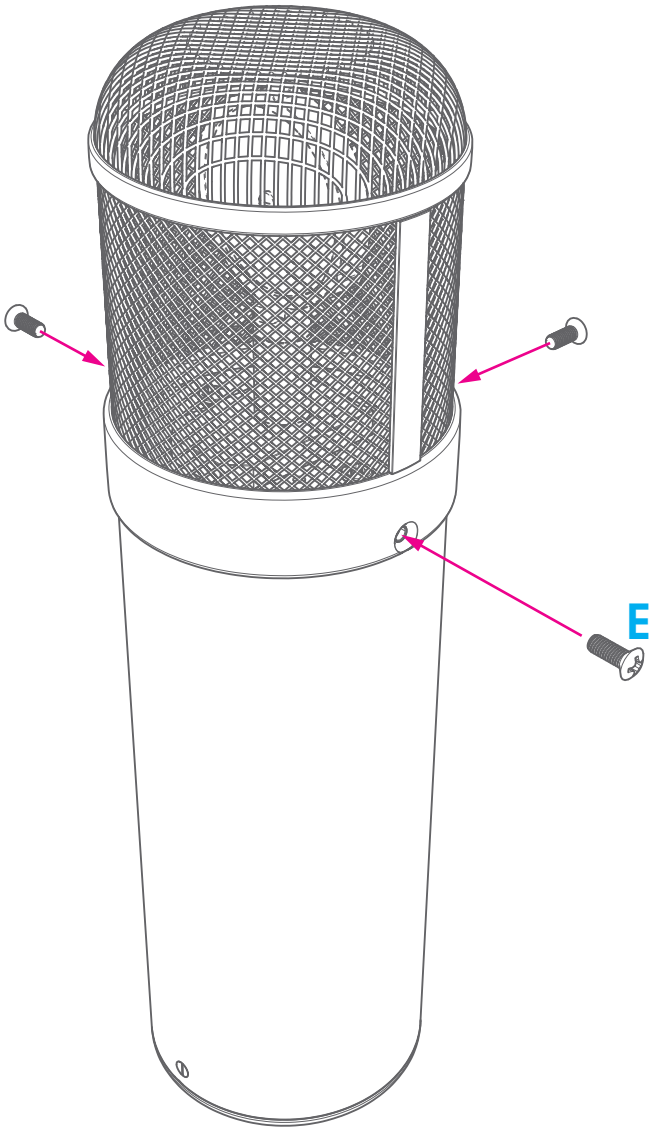
E

Specifications

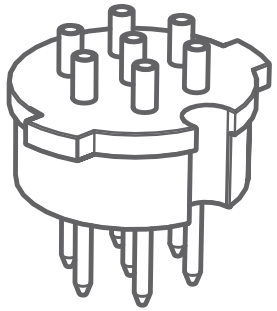

Locking System	**M25 Locking**
Number of Contacts	**7**
Gender	**Male**
Termination	**Solder Termination**
Protection	**IP 40**
Shielding	**Non-shielded**
Contact Plating	**Silver**
Rated Voltage	**250 V**
Rated Current	**5 A**
Max Wire Gauge	**20 AWG**

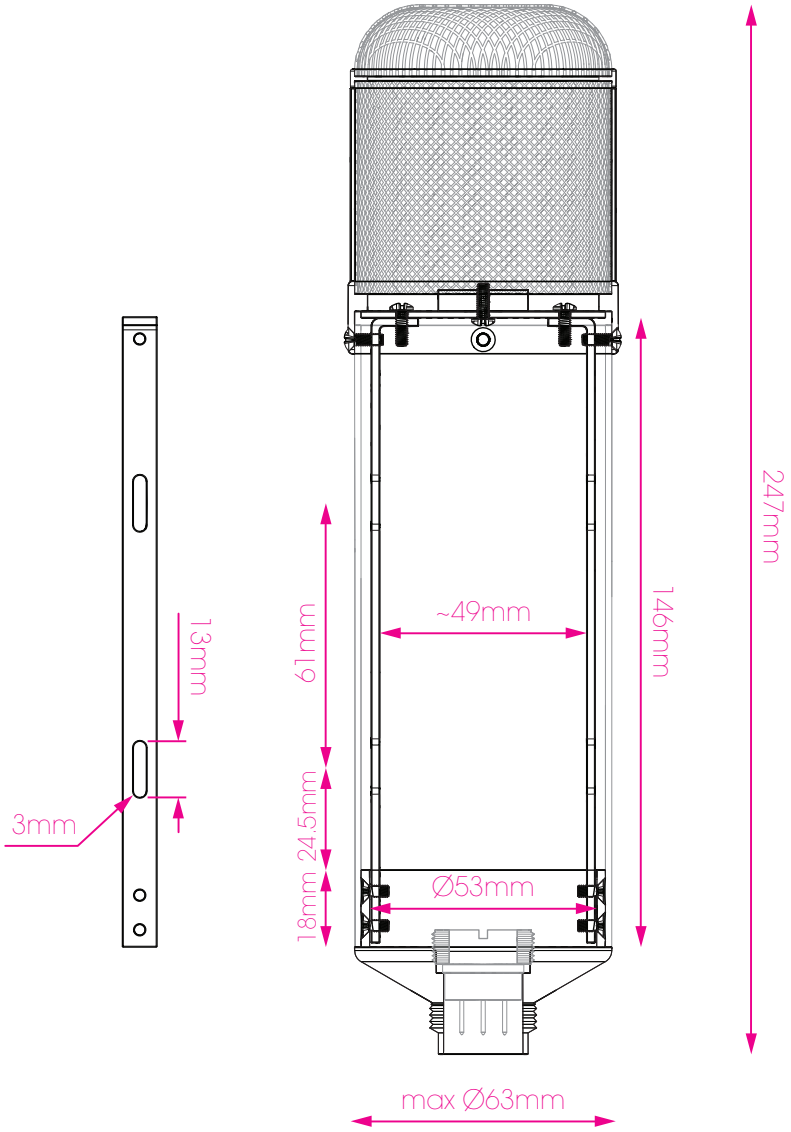

All specifications are approximate.
Specifications are subject to change without notice at the discretion of Equinox Systems LLC.