BARCO-EMT GMBH

Professionelle Electronic

Ein Unternehmen der Gruppe BARCO n. v.

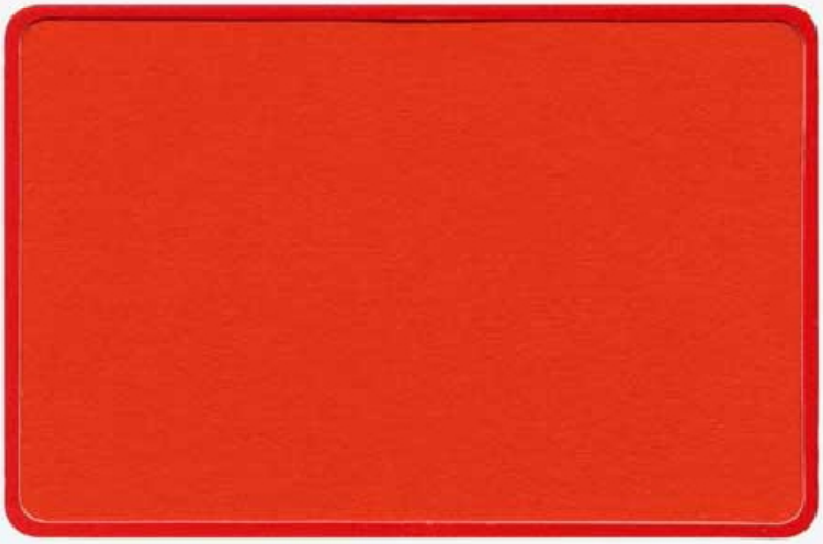

BARCO-EMT
Professionelle Electronic
Ein Unternehmen der Gruppe BARCO n.v.

Postfach 200 · W-7634 Kippenheim · BRD · Telefon (07825) 1011 · Telex 754319 · Telefax (07825) 2285

This instruction manual is to serve solely as information exclusively for the purpose of using the unit by its owner and his assigned co-workers. The descriptions, texts, and illustrations contained in the instruction manual represent confidential information, which remains original unpublished property. This instruction manual and its contents, therefore, may be neither disclosed to a third party, in full or part, nor copied or duplicated. All registration rights of copyright and patent are expressly reserved herewith. In the event of violation of or noncompliance with these provisions and of loss of priorities that may arise as a result, we lay claim to compensation according to the BGB (Statute Book of the Federal Republic of Germany), the HGB (Commercial Code of the Federal Republic of Germany), as well as to trade and patent laws.

Notice!

When ordering replacement parts or requesting price quotations, please specify the unit model and serial number as well as the exact part designation.

Due to product improvements made during the course of a manufacturing series and to changes in particular industrial components, the incompatibility of some parts cannot be avoided.

Instruction Manual

EMT 948

Broadcast Turntable

November 1991

Applies to units starting with serial no. 58 815.

Constructions and circuits are subject to change without notice.

EMT 948



Contents

		Page
A	**Connections and Preparation for Use**	4
A 1	Unpacking Instructions	4
A 2	Releasing the Transport Locks	4
A 3	Turntable Platter	5
A 4	Installation in Cabinets, Tables, or the EMT Console 9948970	5
A 5	Turntable Dust Cover	6
A 6	Mounting a Pickup Cartridge into an EMT Cartridge Shell	6
A 7	Tone Arm Adjustments	6
A 8	Mains Power Connections	8
A 9	Grounding Connections	8
A 10	Audio Connections	8
A 11	Remote Control Connector	9
	EMT 7950032 Cue Amplifier	10
	Remote Control and Indicator Lamps	10
	Start/Stop, Fader Start	11
	Variable Speed	11
	Test Signals	11
A 12	Levels	12
A 13	Muting	12
B	**Operation**	13
C	**Technical Description**	14
C 1	Drive System	14
C 2	Chassis Suspension	15
C 3	Tone Arm	16
A 4	Amplifiers	16
D	**Service**	17
	Instructions for Use	17
	Block Diagram EMT 948	18
	Audio Block Diagram EMT 948	19
	Power Supply	20
	Interface	22
	Oscillator	24
	Speed Control	26
	Control Panel	29
	Servo Amplifier	30
	Motor	32
	Interconnection Board	33
	Auxiliary Monitor	33
	Amplifier Supply	34
	Equalizer Amplifier	36
	Line Amplifier	38
	Cue Amplifier	40
	Mechanical Adjustments	42
	1.Tone arm Distance	42
	2.Brake	42
	3.Motor	42
E	**Technical Data**	44
F	**Information for Ordering**	47
	Recommended Spare Parts	48
	EMT 9948XX1 Audio Block Diagram; Version 9948... with Cue Amplifier	49
	Interconnection Board Option Cue Amplifier	50
	Replacement Parts	51

Connections and Preparation for Use

A 1 Unpacking Instructions

- Place the carton in an upright position (as indicated on carton) and open.
- Remove the upper foam packing insert.
- Remove the accessories from the next foam insert and lift out the insert.
- Remove the turntable dust cover.
- Lift out the rigid foam cover.
- Grasp the turntable by the two handles and lift out from the lower rigid foam insert.
- The turntable platter and the rubber mat are located in the base of the foam insert.

The unit can now be prepared for operation with the appropriate accessories (tone arm counterweight, etc.).

Important!

Retain all packing materials for possible reshipment of the unit.

When repacking the unit, follow the reverse procedure with appropriate care.

Whenever the unit is repacked, do not forget to engage the two transport locks - chassis and motor bearing - and to remove the counterweight with the tube end of the tone arm. Tighten the screws firmly.

The tone arm should be firmly secured to the lift rest.

A 2 Releasing the Transport Locks

The unit is fitted with two transport locks, which are accessible from above through the opening in the chassis for the turntable platter. The locks stabilize the chassis and protect the lower motor bearing against excessive stress due to axial and radial vibrations.

The motor is secured with three brass-tone strips, which extend into a ring-shaped groove in the rotor.

- Slightly loosen the three associated Allen screws (identified in red).
- Hold the rotor so that it cannot fall onto the lower bearing.
- Pull the three strips out of the groove and lower the rotor onto the bearing (approx. 1 mm).
- Retighten the Allen screws. Make sure that the strips do not touch the rotor, lest they impede the motion of the motor.

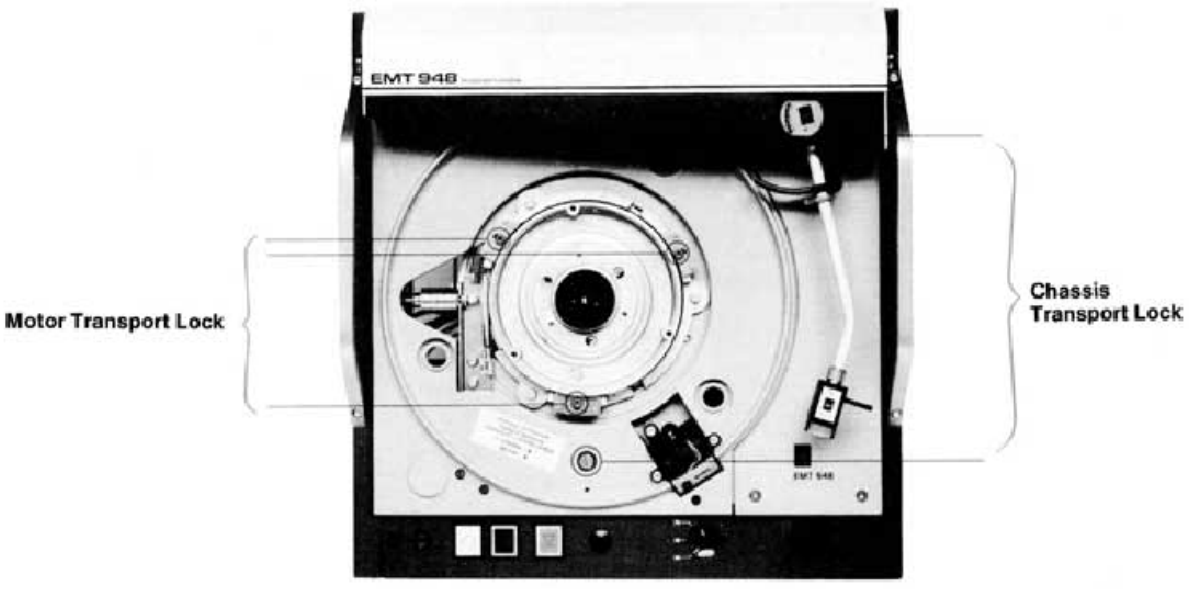

The transport lock for the suspended chassis is released by loosening the two large screws (identified in red) in the opening for the turntable platter. These two screws must be loosened completely, i. e., until they are pushed against the chassis from below by the built-in springs. The screws remain in the unit.

If the unit is to be secured for reshipment, proceed in reverse order. The three strips of the motor lock must be pressed somewhat against the inner wall of the groove to inhibit radial vibrations of the rotor.

A 3 Turntable Platter

Attach the turntable platter to the rotor of the motor with three screws and place the rubber mat on the platter.

A 4 Installation in Cabinets, Tables, or the EMT Console 9 948 970

A cutout of 442 x 457 x 157 mm (17.6" x 18.2" x 6.3") (width x lenght x depth) is required for installation in cabinets or tables.

The EMT Console 9 948 970 has been designed for the EMT 948 Broadcast Turntable. Space is provided to the left of the turntable for the installation of additional control elements such as a cue amplifier, cue loudspeaker, vario potentiometer, etc. This area is covered with a blank panel.

The space can be alternatively provided to the right of the turntable platter if specified with the order.

The console requires an installation space of 697 x 495 x 800 ±25 mm (27.8" x 19.7" x 31.9" ±1") (width x depth x height). The height of the legs can be changed, enabling the operating height to be adjusted between 775 (30.9") and 825 mm (32.9").

The console consists of the console chassis with blank panel, two side elements, a front panel, a rear panel, and four legs. Eight Allen screws, plastic cover caps, and an Allen key for attaching the legs are also supplied.

Assembly proceeds as follows. The two side elements are first screwed onto the chassis. The eight Allen screws are inserted for this purpose through the large openings in the side elements and screwed in tightly. The openings are then covered with the black cover caps.

The legs are screwed into the side elements until the desired operating height has been attained and then locked into place with the wrench supplied.

The rear panel, which can be identified by the somewhat larger side areas, is attached to the rear of the console where the feedthrough holes at the bottom of the chassis are located. The spring pins on the rear panel must snap into the two holes provided for this purpose in the side elements, at the level of the bottom of the chassis. Depress these spring pins slightly to insert. The rear panel is then swiveled upward and fastened to the chassis with the Phillips screws.

The front panel is mounted in the same manner as the rear panel.

The EMT 948 Broadcast Turntable is inserted from above into the cutout provided in the console. The grounding cable attached to the console must be connected to the turntable.

Connections and Preparation for Use

A 5 Turntable Dust Cover

The plastic dust cover can be attached most easily to the unit in a perpendicular position. To facilitate installation, slightly press one of the side supports outwards.

A small retaining bracket is delivered with the turntable to hold the dust cover in an open position. This bracket must be screwed onto the inner side of the assembly at the lower right to permit the dust cover to be closed only when bracket is pressed.

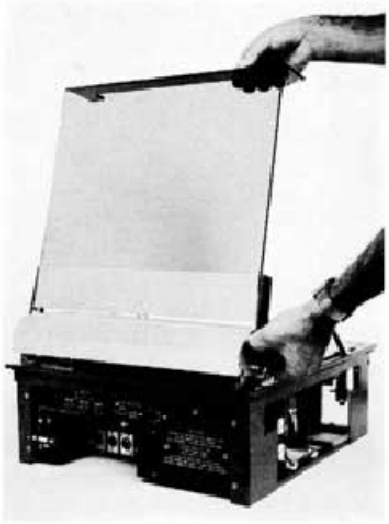

A 6 Mounting a Pickup Cartridge into an EMT Cartridge Shell

Under the catalog number 9 948 120, the EMT 948 Broadcast Turntable is delivered with an empty EMT cartridge shell, including the hardware necessary for mounting the pickup cartridge selected.

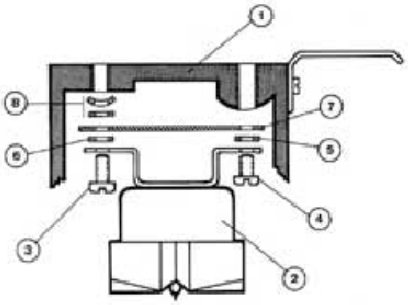

Mechanical assembly

Pos. 1 cartridge shell
2 pickup cartridge (with 1/2" mounting bracket)
3 screw, M 2.6 x 5.5
4 screw, M 2.6 x 5
5,6 spacing washers, 2.6 ø
8 bronze spring
} EMT accessories
7 plastic strip — cartridge accessory (not necessarily required)

The distance of 11 mm is achieved with an appropriate number of spacing washers. The height of the tone arm should be checked (Section A 7 of this instruction manual) and adjusted, if necessary.

Electrical connections:

red	- right channel (a)	white	- left channel (a)
green	- right channel (b)	blue	- left channel (b)

Important!

The cartridge circuit must remain balanced, that is, any bridge between one of the connecting pins and the cartridge body must be removed.

A 7 Tone Arm Adjustments

Mounting the Counterweight

After loosening the two knurled screws at the right and left, tilt the bracket of the dust cover to the rear. Secure the counterweight with the tube piece on the rear end of the tone arm using the center screw; the countersunk side of the plastic sleeve must face the rear.

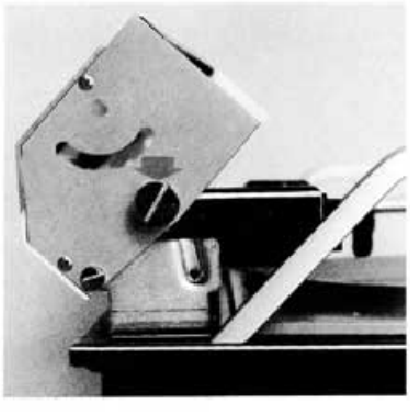

Adjustment of Balance and Tracking Force

Insert the cartridge into the tone arm and tighten the bayonet connector. Set the tracking force adjustment lever to "0". Lower the tone arm lift and turn the counterweight on the threaded tube end until the stylus tip balances exactly in the plane of the record. Fix the counterweight in this position by gently tightening the Allen screw.

Set the tracking force adjustment lever to "2.5" (a tracking force of 25 mN, or 2.5 grams) for T-Series cartridges, or to the force specified by the cartridge manufacturer.



EMT 929 Tone Arm

(Dust cover and bracket not shown)

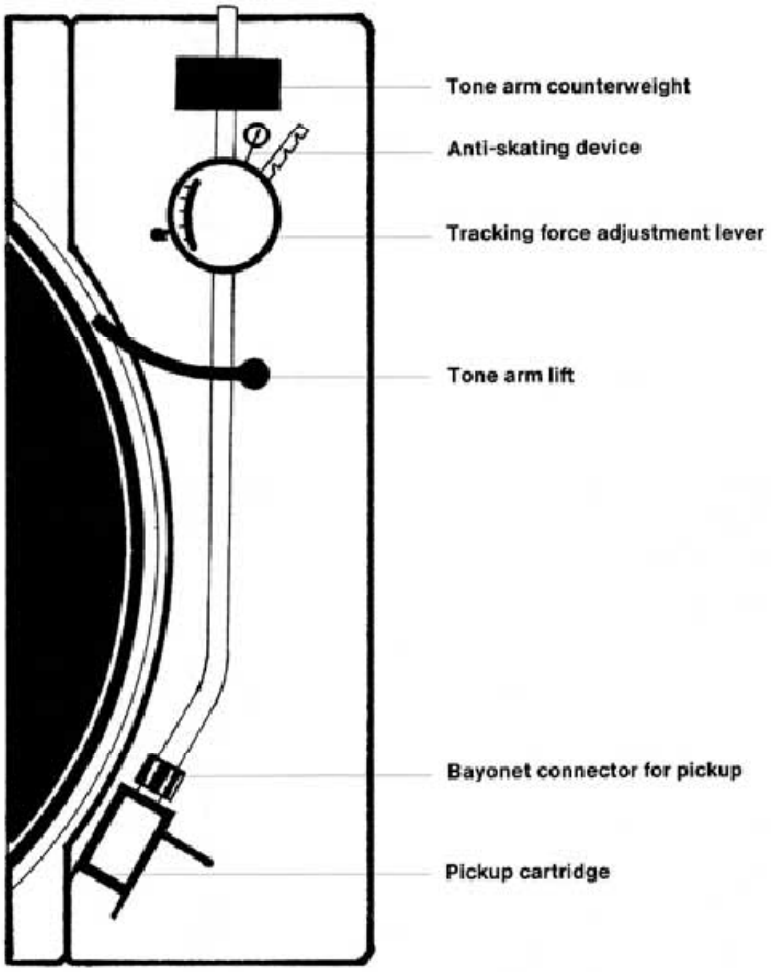

Tone Arm Height

The height of the tone arm is adjusted with the two Allen screws in the pedestal flange at the base of the tone arm.

The horizontal bearing should lie 35 mm above the chassis. To determine the correct height, place the trapezoidal gauge on the chassis. The tone arm height is adjusted correctly when the point of the gauge lies exactly at the middle of the bearing adjustment screw.

Anti-Skating Device

An undesirable force, known as skating force, is produced with any pickup arm due to the tracking angle and the friction between the stylus and the record. The magnitude of this force is about 1/10 of the tracking force employed, and it causes the pickup stylus to be pressed rather unidirectionally against the inner, left-hand groove wall. The tracking force on the right-hand wall is therefore somewhat lower than on the left.

The EMT 929 Tone Arm employs an anti-skating device which consists of a small weight attached to a nylon thread, acting upon the tone arm over a lever arm to produce the required counterforce.

Mounting the Anti-Skating Weight

Lower the anti-skating weight with nylon thread through the hole in the turntable chassis. The small clear plastic disk will prevent the weight from falling through. Feed the nylon thread into the wire eyelet, and hang the loop at the end onto the middle notch of the lever.

This setting is correct for the nominal tracking force of the TSD 15 pickup cartridge of 25 mN (2.5 grams). The inner notch corresponds to a tracking force of 20 mN (2 grams), the outer notch to a force of 30 mN (3 grams).

Connections and Preparation for Use

A 8 Mains Power Connection

Each unit is set at the factory to the mains voltage specified with the order. The set voltage is visibly indicated on the selector on the rear of the unit.

The following mains voltages may be selected: 100, 110, 120, 220, 230, and 240 V.

For 100 - 120 V, a 1 A slow-blow fuse is required; for 220 - 240 V, a 0.5 A slow-blow fuse. The specified mains frequency is 50 - 60 Hz.

A 9 Grounding Connections

The grounding wire of the mains power cable is permanently connected to the chassis of the turntable. The voltage potential labeled "0 V extern" (⊥ ext., the shield potential of the audio cables) is connected at the factory to the chassis ⏚. This connection can be removed by unscrewing the strap on the rear of the unit if required for preventing disturbances ("hum loops") due to electromagnetic fields.

An additional grounding screw is provided for the "0 V extern" potential, e.g., for centrally grounding all cable shields.

A 10 Audio Connections

The audio connectors are located on the rear of the unit. The pin connections of the mating connectors for the line outputs and for the headphone/monitor outputs are indicated on the audio block diagram.

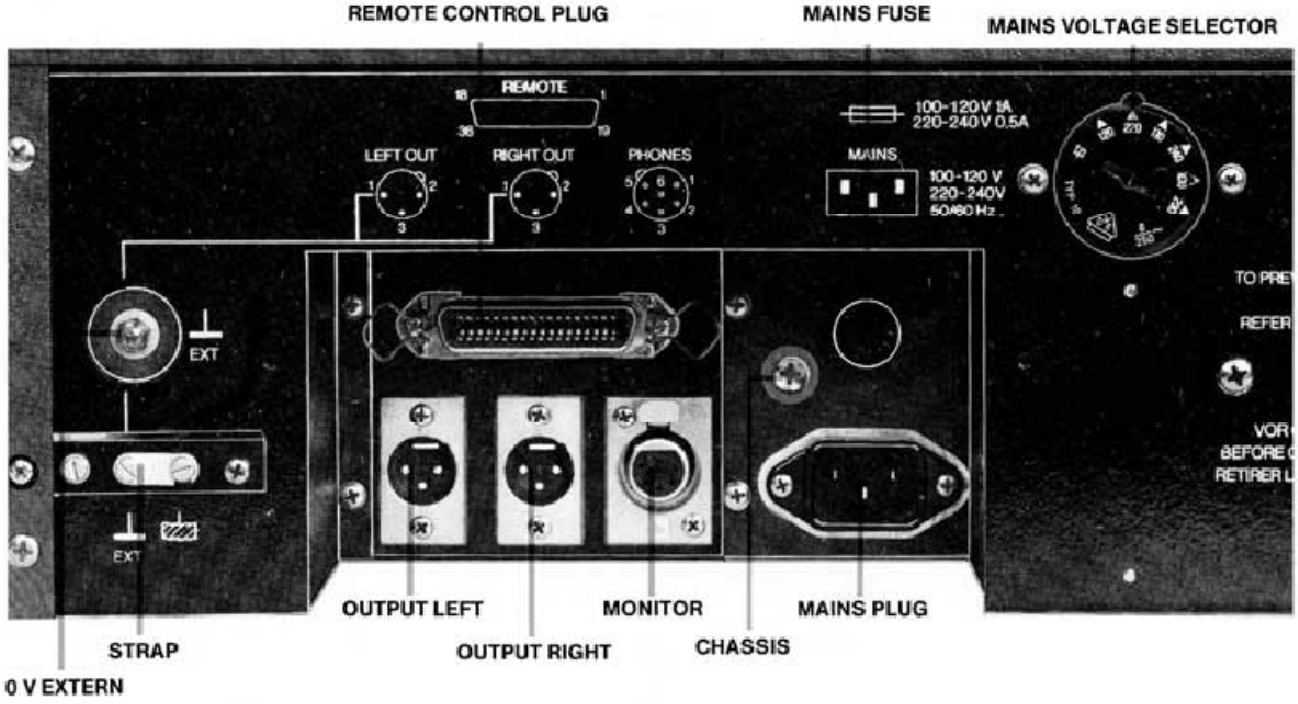

A 11 Remote Control Connector

Mating Connector: Amphenol 57-30360 (4 203 234).
The pin connections of the remote control connector are divided into three groups: 1. Ext. Cue Amplifier

2. Remote Control

3. Test Signals

Pin Connections:

1	+27 V Cue-Ampl.	19	−27 V Cue-Ampl.
2	0 V Cue-Speaker	20	0 V Cue-Speaker
3	+12,5 V Cue-Ampl.	21	−12,5 V Cue-Ampl.
4	0 V Cue-Ampl.	22	0 V Cue-Ampl.
5	0 V Lamps	23	0 V Lamps
6	Mono (0 V)/Stereo	24	0 V Pushbuttons
7	Remote Start (+ Faderstart)	25	+20 V Lamps
8	Remote Stop	26	+20 V Lamps
9	Local Only	27	Lamp Lift
10	Remote Only	28	Lamp Stop
11	Vario Pot. (more pos. volt.)	29	Lamp Start
12	Vario Pot. (less pos. volt.)	30	Phones Mono (Cue-Ampl.)
13	Vario Pot. (Schleifer)	31	Frequ.-Volt.-Inf.
14	Vario (0 V)/Quartz	32	Pulsphase
15	—	33	Tacho
16	—	34	0 V Motor
17	—	35	Motor-current I
18	—	36	Motor-current II

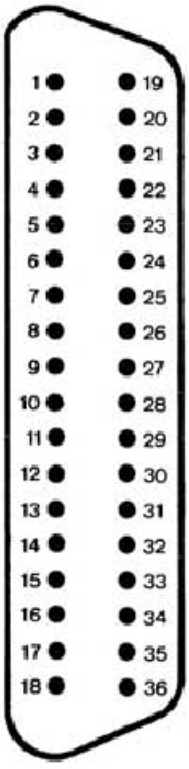

Connections and Preparation for Use

Cue Amplifier

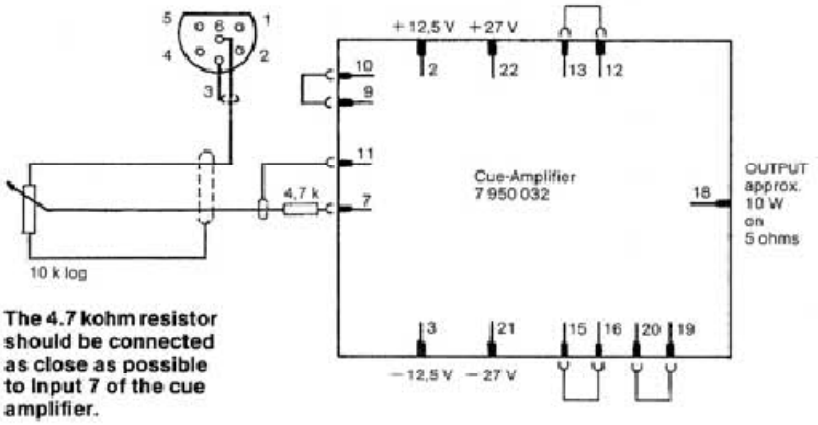

The 4.7 kohm resistor should be connected as close as possible to Input 7 of the cue amplifier.

If required, the broadcast turntable may be equipped with the 7950032 Cue Amplifier. In the 9948971 Console, the amplifier board is already delivered fully installed with a loudspeaker. In all versions of the broadcast turntable with order no. 9948..1, the cue amplifier has been installed without a loudspeaker. With the 9948941 Cue Amplifier Kit, all other versions may be equipped with a cue amplifier.

The basic installation of the 7950032 Cue Amplifier Board is illustrated in the diagram.

Refer also to Cue Amplifier on page 41, the audio block diagram on page 49, and the Interconnection Board, cue amplifier option.

Important! Turn off the mains power before connecting the cue amplifier to the turntable.

Remote Control and Indicator Lamps

The remote control connections are designed for activation of a function with 0 V.

Example:

Pin 9 Local Only 0 V: Operation possible only at the unit
Pin 7 Remote Start 0 V: The turntable starts. In this case, pin 9 (Local Only) may not lie at 0 V.

Principle of operation:

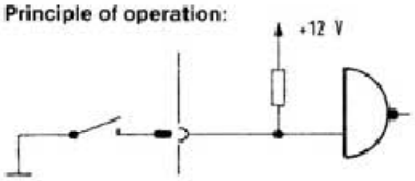

Unused or open inputs are pulled up to 15 V through a resistor (see diagram).

The following operating modes can be established using the Local Only (pin 9) and Remote Only (pin 10) connections:

Local Only	Remote Only	
Input open	Input open	Local and remote operation possible
0 V	Input open	Only local operation possible
Input open	0 V	Only remote operation possible
0 V	0 V	Operation not possible (can be used for inhibiting operation)

If the momentary operating state of the turntable is to be indicated at a remote location such as the mixing console, indicator lamps for the Start, Stop, and Lift functions can be connected to the corresponding remote control pins.

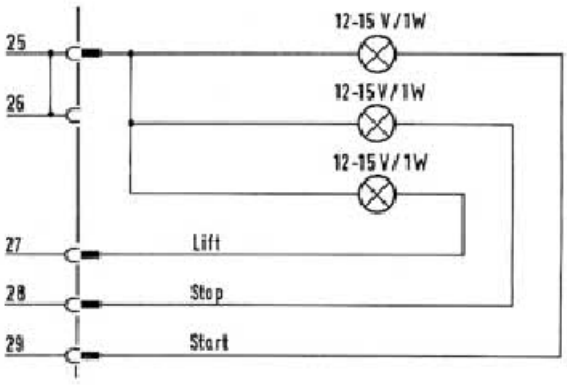

The voltage drop on the lamps is approx. 12 V in this circuit.

For the indication of additional functions, e.g., Vario/Quartz Switching, Remote Only, etc., the following connection scheme can be employed:

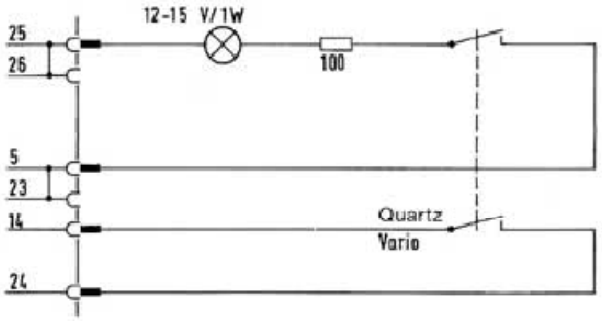

Current drain on pins 25 and 26 max. 400 mA, corresponding to five miniature lamps

Example: Vario/Quartz Switching

Start/Stop, Fader Start

Position and function of the two programming plugs on the Interface Board (7 948 108):

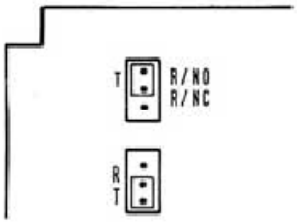

Two connections are provided on the remote control connector for the Start and Stop functions: pin 7 for Remote Start and pin 8 for Remote Stop. Remote control is not possible when pin 9 (Local Only) is connected to ground. To enable fader starts, two programming plugs must be alternately inserted on the Interface Board:

T ≙ Pushbutton Start; the Start and Stop functions are initiated through pins 7 and 8 of the remote control connector.
R ≙ Start/Stop through a fader contact or switch; the Start and Stop functions are initiated through pin 7 of the remote control connector.
R/NO ≙ The fader contact is normally open.
R/NC ≙ The fader contact is normally closed.

Variable Speed

Circuit diagram for Vario Operation:

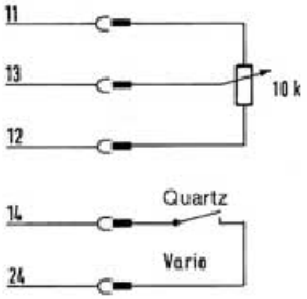

If variable speed operation be desired, pin 14 of the remote control connector must be connected to ground. The nominal speed can be varied approximately ±25 % with a potentiometer connected to pins 11, 12, and 13. The internal circuitry of the unit is designed such that the turntable rotates more slowly when the voltage on the wiper is increased.

Test Signals

Pins 31 - 36 simplify adjustments of the unit and enable fault detection to be accomplished rapidly in the event of improper drive system performance. Refer to the block diagram and the servicing section.

Connections and Preparation for Use

Remote Control Connector

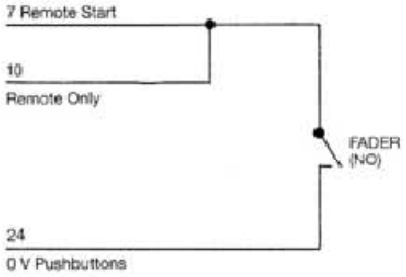

If remote starting is implemented with a normally open (NO) contact, the unit runs when the fader contact is closed. In this case, the remote start function may be used simultaneously to mute the headphone or monitor output signals (at the six-pin audio connector) by connecting pins 10 and 7 together on the remote control connector. The programming plug positions are given in part 2 of A 13 Muting.

A 12 Levels

The unit is adjusted to the program levels given in the control report, in general to + 6 dB ≙ 1.55 V. The corresponding test record exhibits a full modulation level of $\hat{v}$ = 10 cm/s at 1 kHz (e. g., DIN 45 544 Test Record). The levels at 315 Hz and $\hat{v}$ = 5.42 cm/s correspond to the full modulation level cited above.

Level adjustments may be accomplished easily with the potentiometers projecting toward the front of the printed circuit boards. The locations of these potentiometers are indicated on the label strips. Possible level differences between the channels of a pickup cartridge are balanced out with the "right adj." potentiometer; the adjustment range is approximately 4 dB.

A 13 Muting

The standard unit is equipped with the following muting functions:

1. The line outputs are muted during the Start and Stop phases. This muting function can be defeated by changing the positions of two programming plugs on the Line Amplifier Board (EMT 7 950 039).
2. The headphone outputs on the six-pin audio connector are muted in the Remote Only mode. This muting function can be defeated for the mono signal (pins 6 and 3 of the six-pin audio connector) by changing the position of a programming plug on the Equalizer Board (EMT 7 950 038 or EMT 7 950 088). The muting function for the stereo signal (pins 1, 2, 4 and 5) can be defeated by changing the position of a programming plug on the Interconnection Board.

Transport locks released? (See A 2, page 4)
Mains voltage selector set to correct position? (See A 8, page 8)
Tone arm adjusted? (See A 7, page 6)

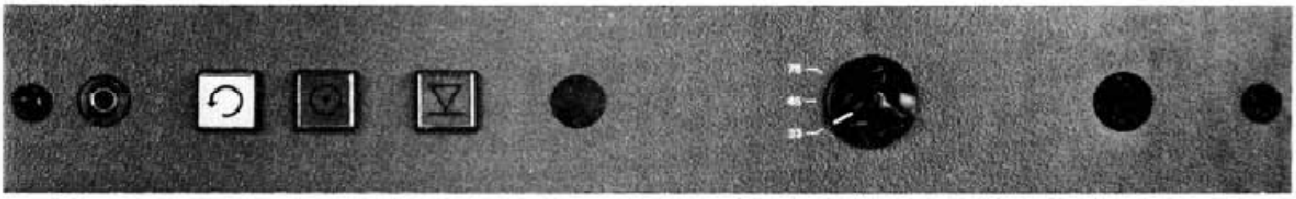

Switch Functions

Power Switch

Located under the dust cover to the rear left. When power is applied, a cold-cathode lamp illuminates the record.



Reverse

Front left. Pressing the button rotates the turntable platter in the reverse direction at 33-1/3 RPM; releasing the button stops the motion.

If the button be pressed when the turntable platter is rotating forward, reverse rotation is effected.



Start/Stop

Front left. Pressing the button starts platter rotation (the indicator lamp illuminates); pressing again stops the platter (the lamp is extinguished).

The LED (SYNC) at the edge of the platter is lit when the platter has reached nominal speed.



Tone Arm Lift

Front left. Pressing the button lowers the tone arm (the indicator lamp illuminates); pressing again lifts the arm.

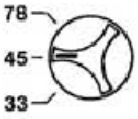

Speed Selector

Front right

The adaptor in the middle of the turntable platter can be turned to lock into the upper or lower position.

Cueing to a desired position (e.g., the beginning of modulation)

Position the raised tone arm over the desired point on the record and lower the arm. The cueing position can be found easily by alternately actuating the Start and Reverse buttons while monitoring with headphones.

A desired point on the record can also be found manually by rotating the turntable platter back and forth.

When the point has been found, hold a finger on the edge of the platter at the black point corresponding to the selected speed and rotate the platter in a counterclockwise direction to the black point near the pickup cartridge.

The rotational distance corresponds to the acceleration time needed for the platter to attain the selected speed. During this time, the line outputs are muted (see A 13, page 12).

The record itself should not be touched when rotating back and forth. For the purpose of manual cueing, the edge of the turntable platter extends approximately 24 mm beyond the record.

Technical Description

C 1 Drive System

The EMT 948 Broadcast Turntable is equipped with a direct drive system, that is, the platter is rigidly connected to the rotor of the drive motor by a shaft. This rigid connection enables rapid acceleration of the platter for "quick starts".

Rotational drive is provided by a controlled dc motor. Commutation is performed using Hall generators, thereby totally eliminating wear due to mechanical contact.

A high-resolution tachometer generator magnetically senses the momentary speed of the turntable platter and delivers a sinewave signal to the control board. There, two comparison processes are performed with a reference signal obtained from a highly stabile quartz oscillator.

In one process, the tachometer signal and reference signal are converted into frequency-dependent signals (f/u converter) and compared. The large acceleration signals required for Start and Stop are obtained from this comparison. In the second process, the relative phases of the tachometer signal and the reference signal are compared in a phase locked loop (PLL) circuit. The resultant control signal is employed in the range of the nominal rotational speed to eliminate small phase variations between the tachometer signal and the reference signal.

The various speeds (33-1/3, 45, 78 min^{-1}) are attained by changing the frequency of the reference signal. This process is performed with a programmable divider, which divides the signal from the quartz oscillator down to particular frequencies.

If variable speed is to be employed instead of the nominal speed, a VCO (voltage controlled oscillator) is used as the reference source. The frequency produced by the VCO is controlled by a dc voltage from an external potentiometer. Vario/quartz switching is accomplished by a logic signal fed externally through the remote control connector.

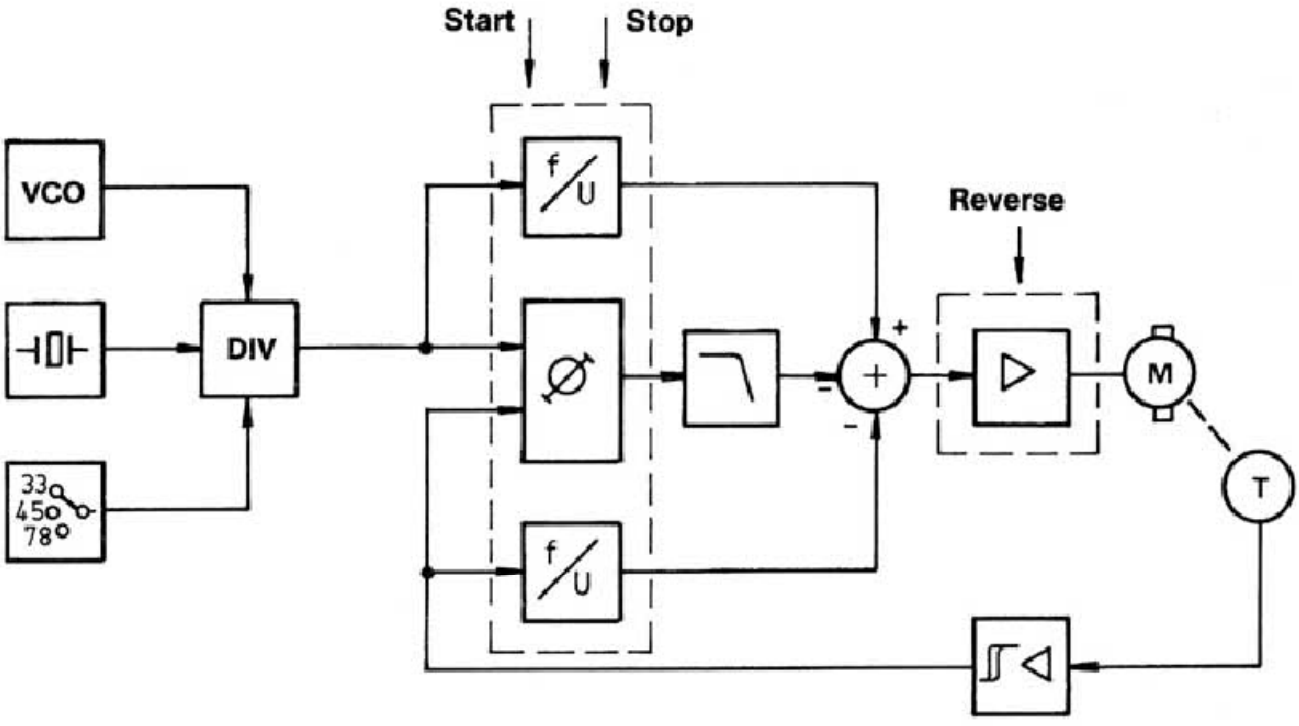

C 2 Chassis and Suspension

Broadcast schedules are relentless in their demands for exact timing. Precise fade-ins with quick turntable starts must be possible during live programs. Therefore, a short run-up time of the platter to the nominal speed represents an important requirement for a broadcast turntable. The use of the most modern drive system principles, a light platter, a motor with low-inertia rotor, and direct drive allows rapid starts and stops to be achieved optimally.

With such operation, however, considerable reaction moments occur which lead to such effects as rotational vibration around the axis perpendicular to the turntable platter. While compensation for purely lateral or vertical moments can be made by dynamically balancing the tone arm, this does not hold true for rotational moments because of the finite mass of the arm. The rotational moments cause tracking disturbances and produce unpleasant wow and flutter effects, especially during the starting phase.

By means of a new mechanical design, which employs a stiff ring with two rods connected to the lower frame and two further rods to the chassis, the excitation of rotational vibrations is highly damped. The chassis can therefore be dimensioned for lower mass, considerably reducing the total weight of the unit. The required isolation from mechanical and solid-borne vibrations is achieved by four coil springs, upon which the chassis is suspended.

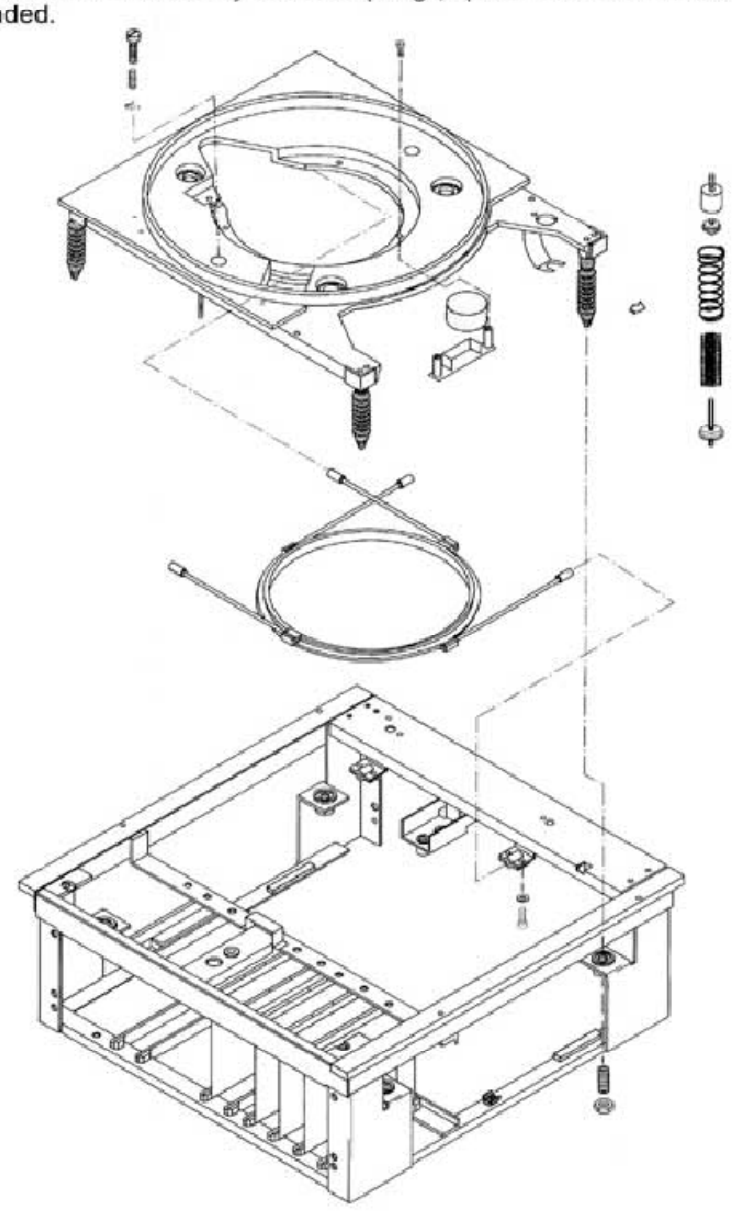

Technical Description

C 3 Tone Arm

The proven EMT 929 precision tone arm is employed. This arm is statically and dynamically balanced in all three dimensions, reducing its sensitivity to external disturbances (such as mechanical shocks and vibrations) to an absolute minimum. Through use of precision ball bearings for all degrees of freedom and exceptionally supple internal tone arm leads (terminated in an audio connector for the pickup signal), extremely low bearing friction is achieved. The maximum force, including torsional forces, measured at the stylus tip is 0.5 mN (or 50 milligrams). The stylus force is produced by spring tension and can be adjusted by means of a lever to any value between 0 and 50 mN (0 to 5 grams). An anti-skating device supplements the basic tone arm, which fulfills all state-of-the-art requirements and makes further developments unnecessary in the foreseeable future. Of particular importance is the careful tuning of the resonant frequency of the tone arm integrated with the EMT TSD-15 pickup cartridge with regard to the vibrational characteristics of the entire turntable system. Experience has shown that damage to the diamond stylus is not caused by record play but rather by improper lowering of the stylus onto the record surface. This procedure has been automated, therefore, in order to increased operational reliability. A small, internal, low-noise motor raises and lowers the tone arm. The adjustable lowering time is approximately 200 ms, which is more rapid than achievable with manual lowering, yet insures that the maximum allowable forces on the stylus cantilever will never be exceeded.

C 4 Amplifiers

In broadcast studio use, a phonograph turntable constitutes a program source fulfilling standard matching requirements. For this reason, integrated equalizing amplifiers are employed. In addition to the standard equalization time constants of 3180/318/75 µs, the equalization can be switched to 3180/318/0 µs (FLAT) for the reproduction of test records. Two filters are also included which attenuate signals lying outside of the corner frequencies of 30 Hz and 25 kHz as a preventative against disturbance frequencies. The maximum output level of + 22 dB on a load of 200 Ohms reflects the trend toward higher recording levels and the resultant requirements for greater signal headroom.

In the standard version, the amplifier consists of two plug-in printed circuit boards, the stereo preamplifier with standard equalization and the stereo line amplifier.

The line outputs are automatically muted when the platter is stopped and during Start run-up, as controlled by the motor speed. The muting function can be defeated with programming plugs.

A monitor output, mono and stereo, is provided for purposes such as cueing. Headphones or an external amplifier may be connected to the output.

A 10 W cue amplifier is available as an option.

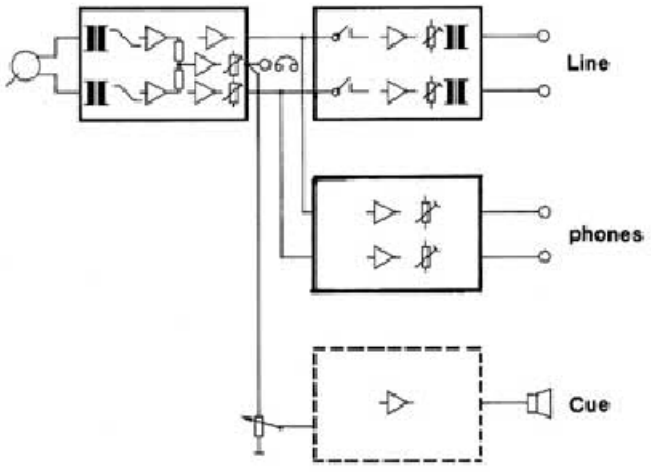

Instructions for Use

The EMT 948 block diagram provides information concerning the designation of signals and the connecting leads between the individual circuit boards of the motor drive system.

In the descriptions accompanying the circuit diagrams, the following abbreviations are employed for the pins of integrated circuits:

6/Z 601 ≙ pin 6 of integrated circuit no. 601

The following designations apply for logic signals:

LOW ≙ approx. 0 V
HIGH ≙ approx. 12 – 15 V

Instruments required for servicing:

1 audio millivoltmeter
1 dual-channel oscilloscope
1 dc millivoltmeter

The following abbreviations are employed in the circuit diagrams:

AMPS	Amplifier Supply
PAN	Control Panel
EQU	Equalizer
INT	Interface
LINE	Line Amplifier
OSZ	Oscillator
PWS	Power Supply
REM	Remote Control (connector)
SERV	Servo Amplifier
SPC	Speed Control
MOT	Motor
BRAK	Brake
MON	Aux. Monitor

Auxiliary Monitor on
Interconnection Board

Note: No boards should be removed or put into the unit with the power switched on.

Blockschaltbild EMT 948
BLOCK DIAGRAM

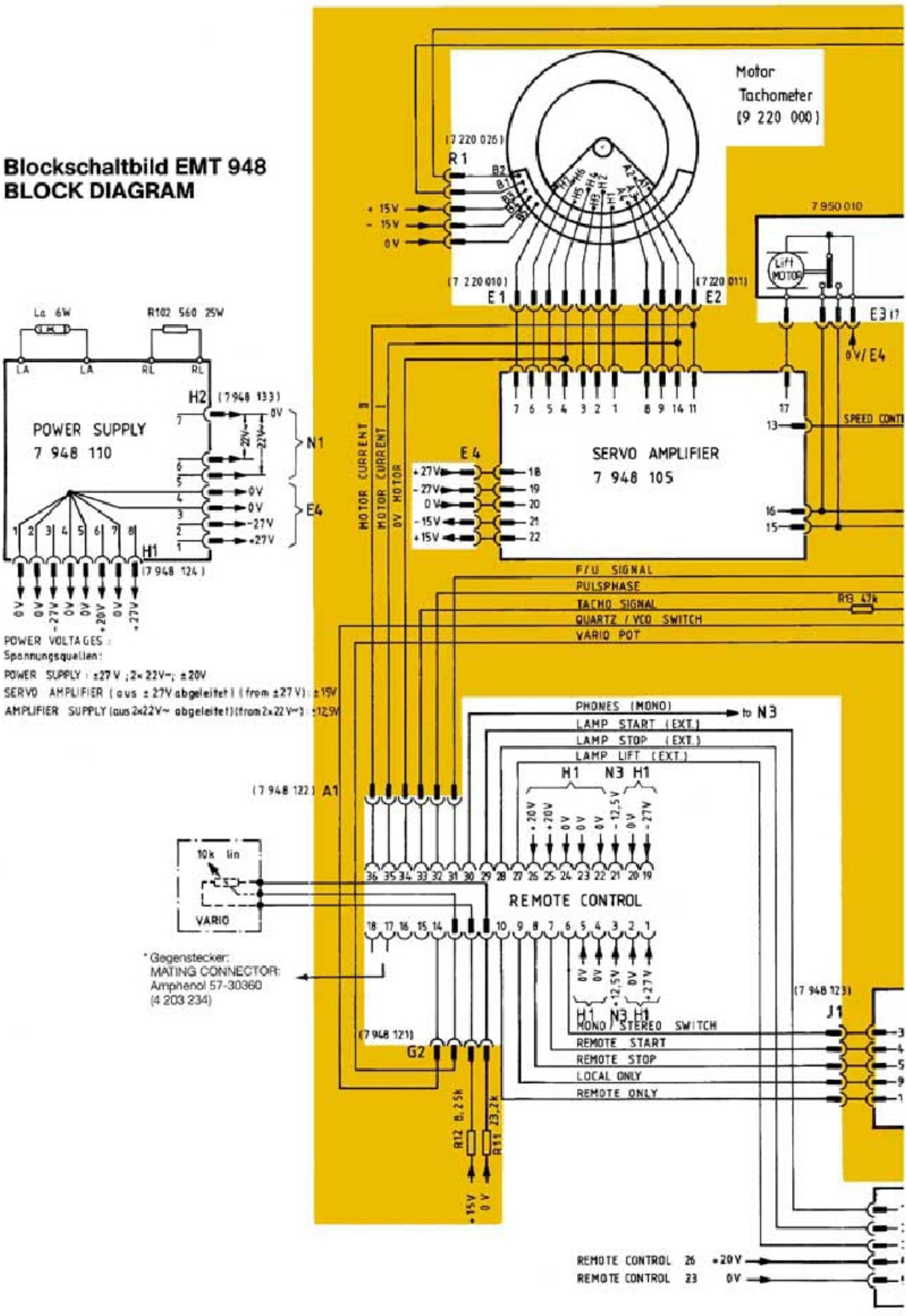

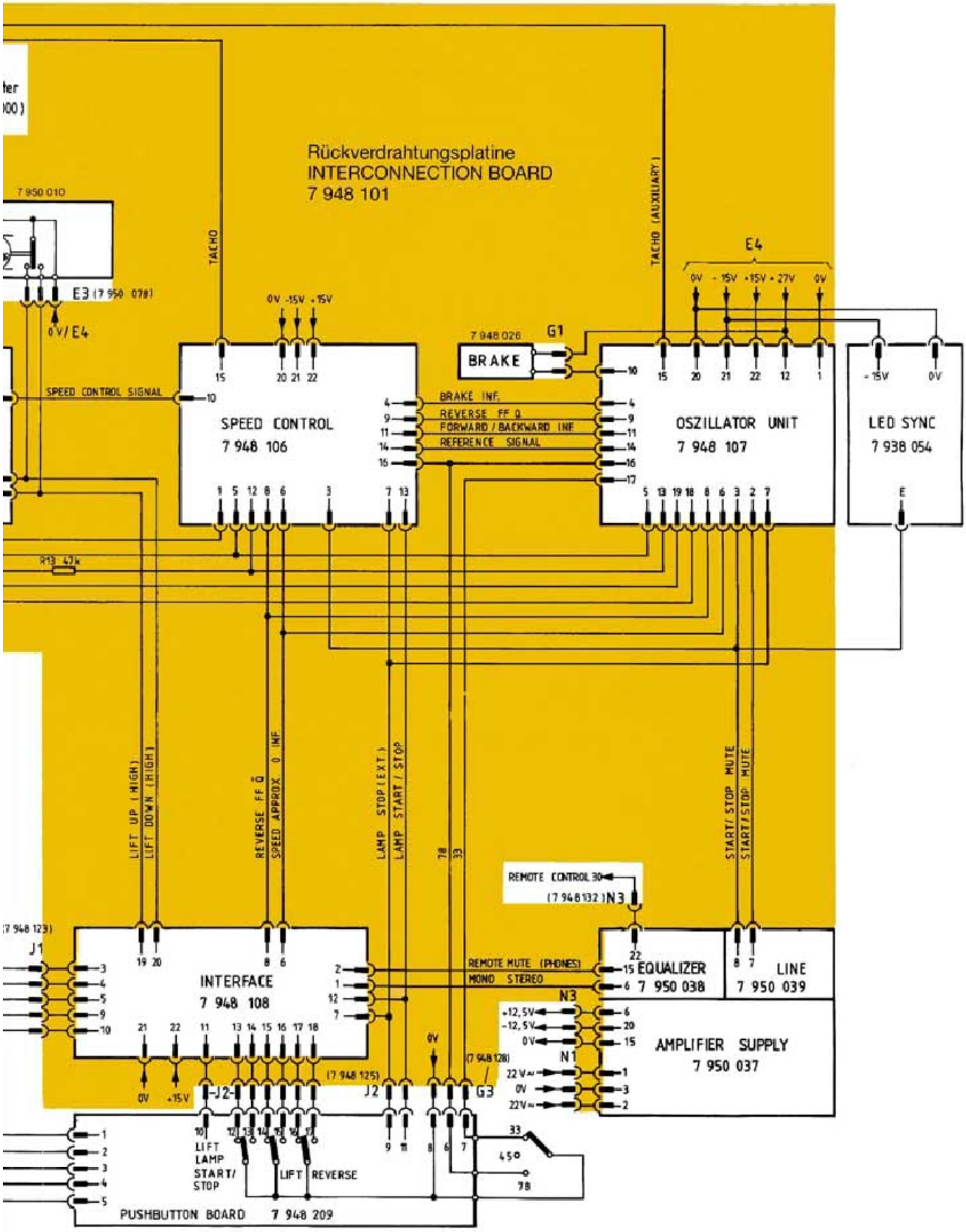
Rückverdrahtungsplatine
INTERCONNECTION BOARD
7 948 101
TACHO
TACHO (AUXILIARY)
E4
0V -15V +15V +27V 0V
E3 (7 950 078)
0V/E4
0V -15V +15V
7 948 026
G1
BRAKE
SPEED CONTROL SIGNAL
SPEED CONTROL
7 948 106
BRAKE INF.
REVERSE FF Q
FORWARD / BACKWARD INF.
REFERENCE SIGNAL
OSZILLATOR UNIT
7 948 107
LED SYNC
7 938 054
R13 47k
LIFT UP (HIGH)
LIFT DOWN (HIGH)
REVERSE FF Q
SPEED APPROX. 0 INF.
LAMP STOP (EXT.)
LAMP START / STOP
START/STOP MUTE
START/STOP MUTE
REMOTE CONTROL 30
(7 948 132) N3
(7 948 123)
J1
INTERFACE
7 948 108
REMOTE MUTE (PHONES)
MONO STEREO
EQUALIZER
7 950 038
LINE
7 950 039
N3
+12,5V
-12,5V
0V
N1
22V~
0V
22V~
AMPLIFIER SUPPLY
7 950 037
(7 948 125)
J2
(7 948 128)
G3
-J2-
LIFT LAMP START/ STOP
LIFT
REVERSE
450
78
PUSHBUTTON BOARD 7 948 209

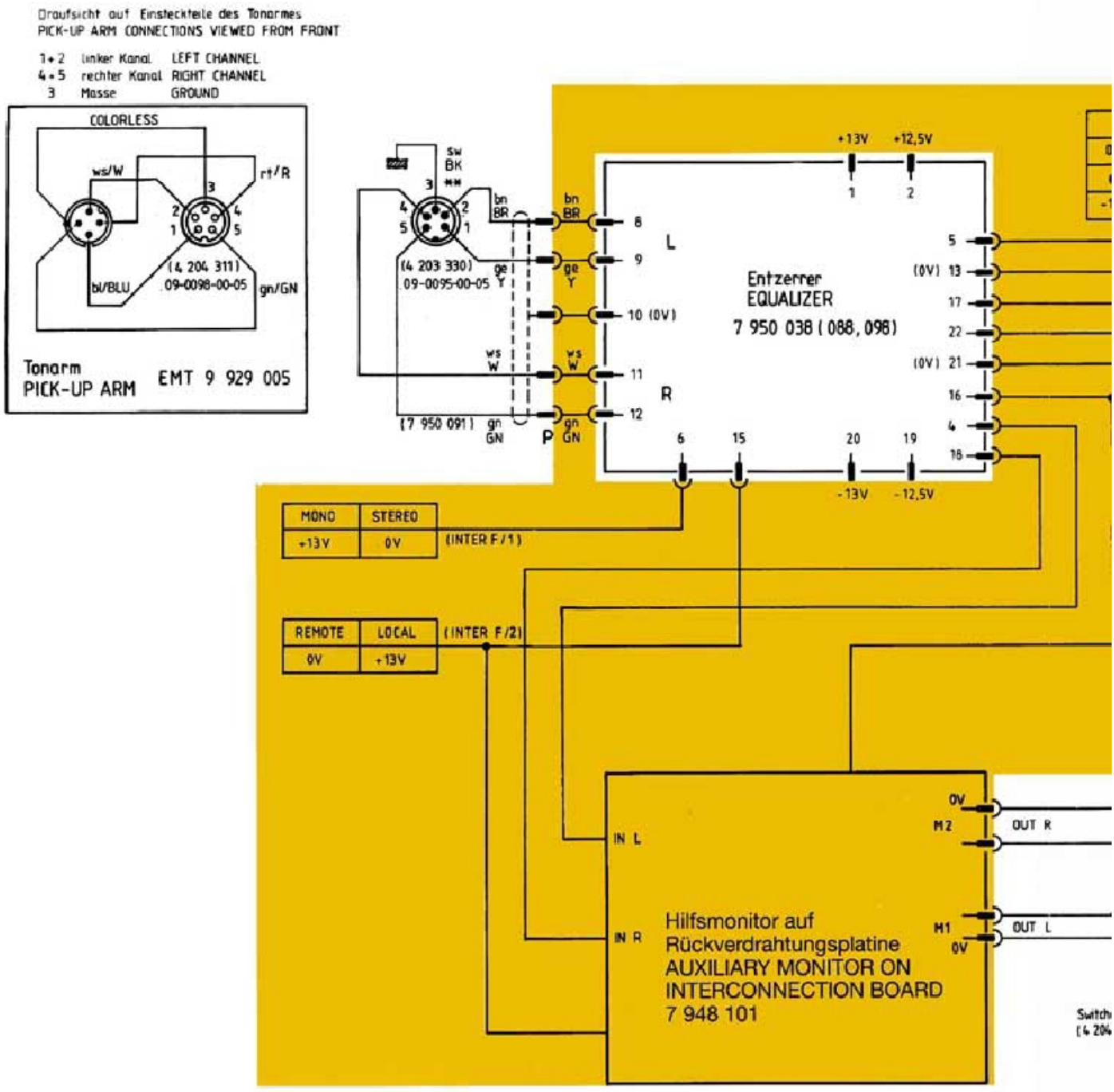
Draufsicht auf Einsteckteile des Tonarmes
PICK-UP ARM CONNECTIONS VIEWED FROM FRONT
1 + 2 linker Kanal LEFT CHANNEL
4 + 5 rechter Kanal RIGHT CHANNEL
3 Masse GROUND
COLORLESS
ws/W
rt/R
bl/BLU
gn/GN
(4 204 311)
09-0098-00-05
Tonarm
PICK-UP ARM
EMT 9 929 005
(4 203 330)
09-0095-00-05
(7 950 091)
Entzerrer
EQUALIZER
7 950 038 (088, 098)
+13V
+12,5V
-13V
-12,5V
MONO
STEREO
+13V
0V
(INTER F/1)
REMOTE
LOCAL
0V
+13V
(INTER F/2)
IN L
IN R
Hilfsmonitor auf
Rückverdrahtungsplatine
AUXILIARY MONITOR ON
INTERCONNECTION BOARD
7 948 101
OUT R
OUT L

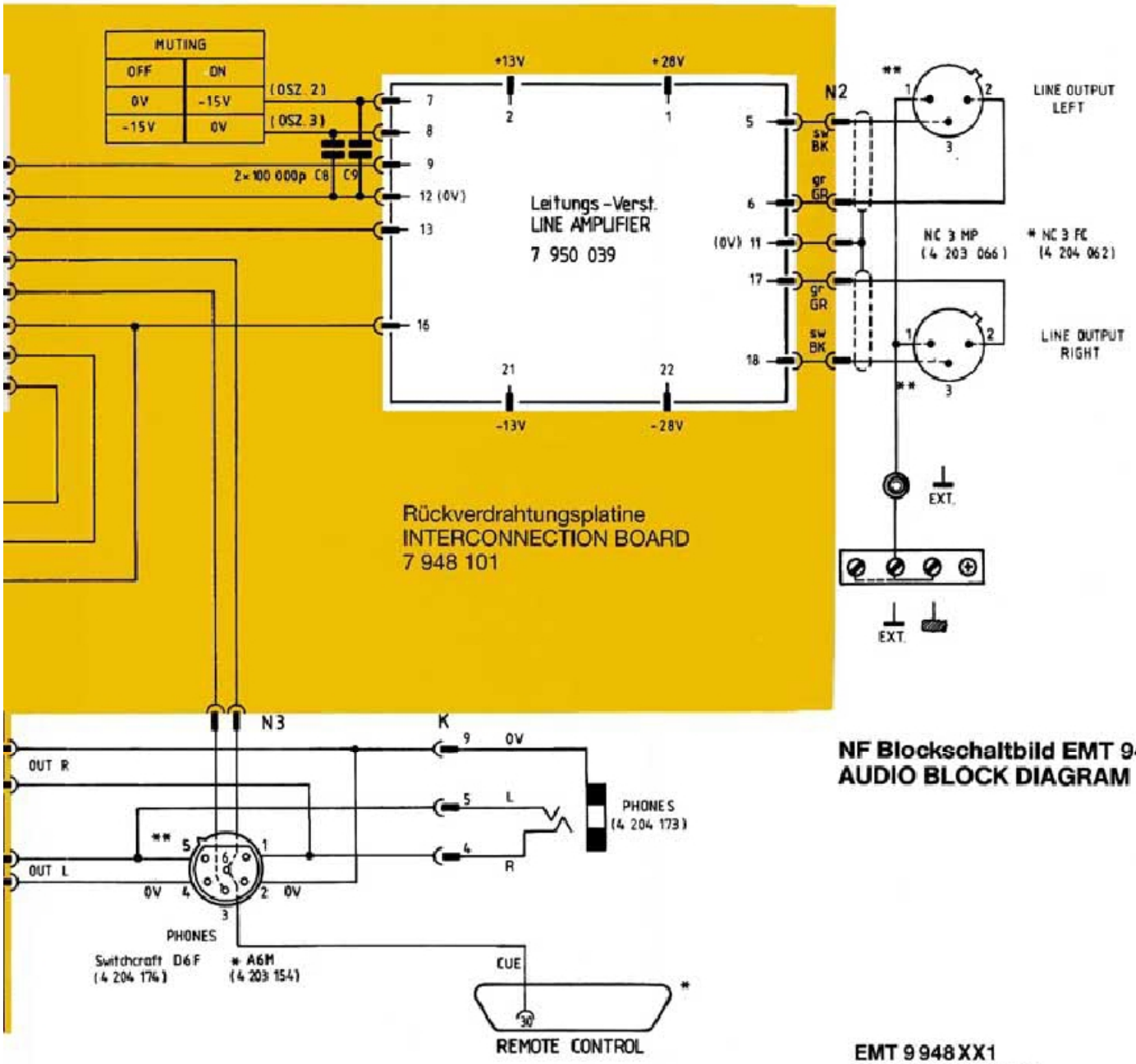

NF Blockschaltbild EMT 948
AUDIO BLOCK DIAGRAM

EMT 9 948 XX1
NF-Blockschaltbild
AUDIO BLOCK DIAGRAM

mit Cue-Verstärker siehe Seite 47
with Cue Amplifier see page 47

*Gegenstecker:
MATING CONNECTOR:
Amphenol 57-30360
(4 203 234)

** Sicht auf Einsteckseite
VIEW ON FRONT SIDE

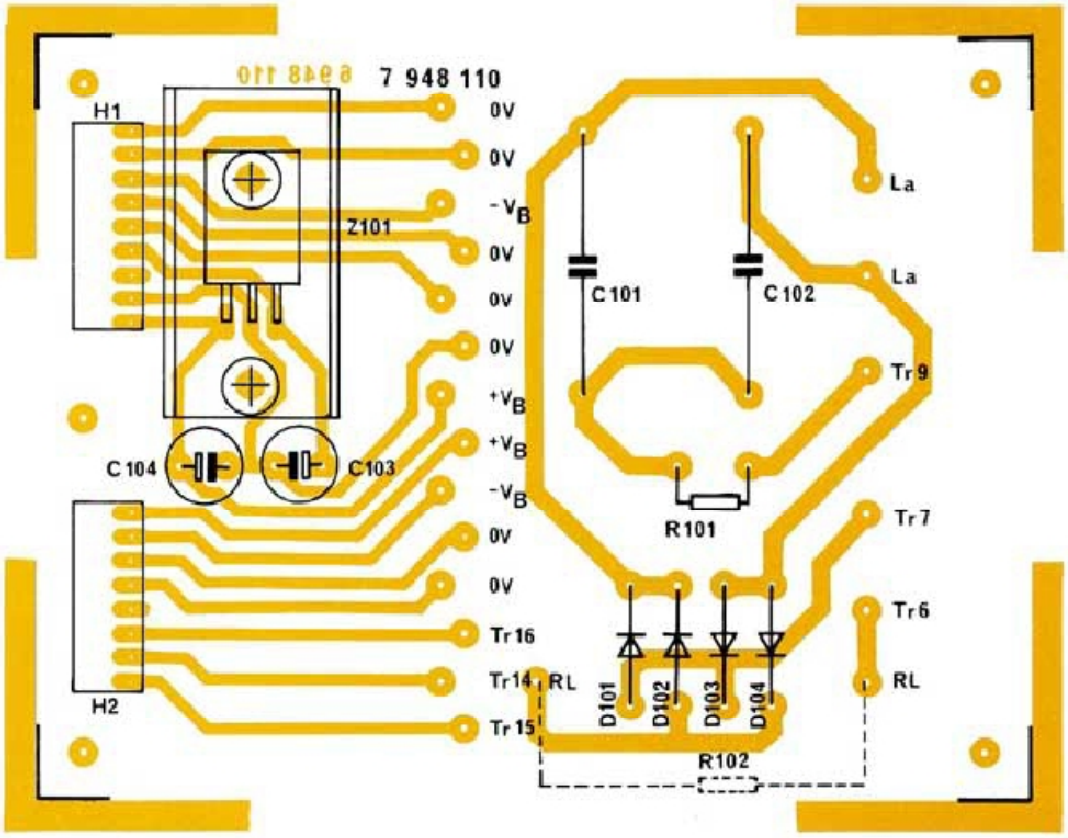

EMT 948
Netzteil
POWER SUPPLY

Netzspannungswähler
MAINS VOLTAGE SELECTOR

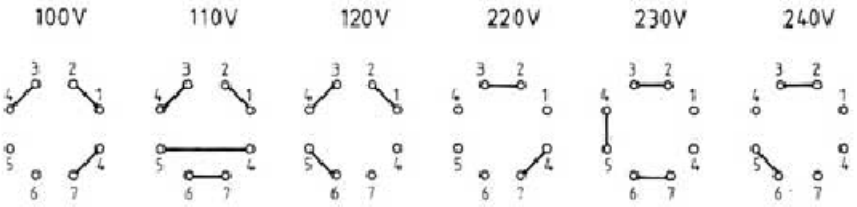

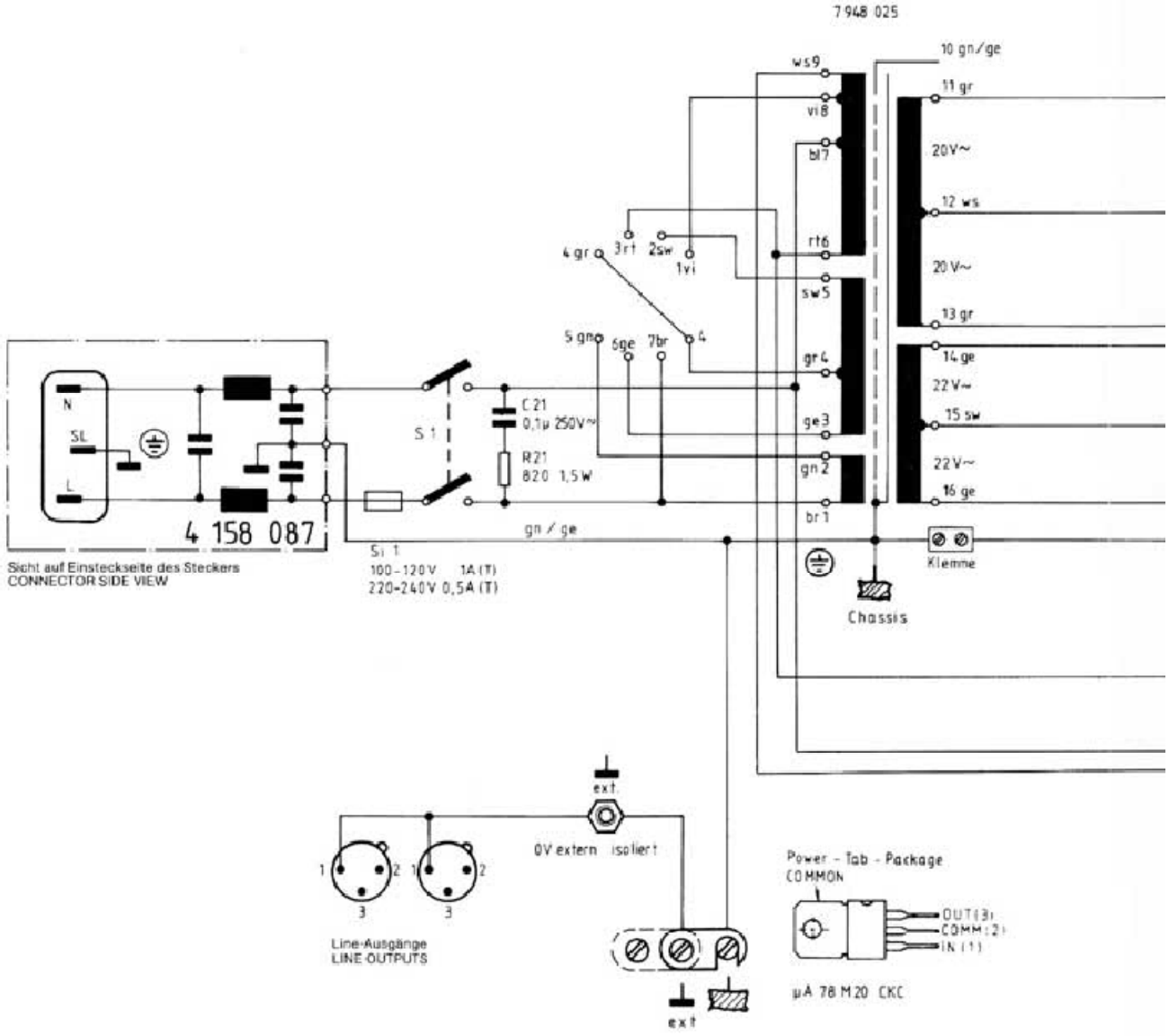

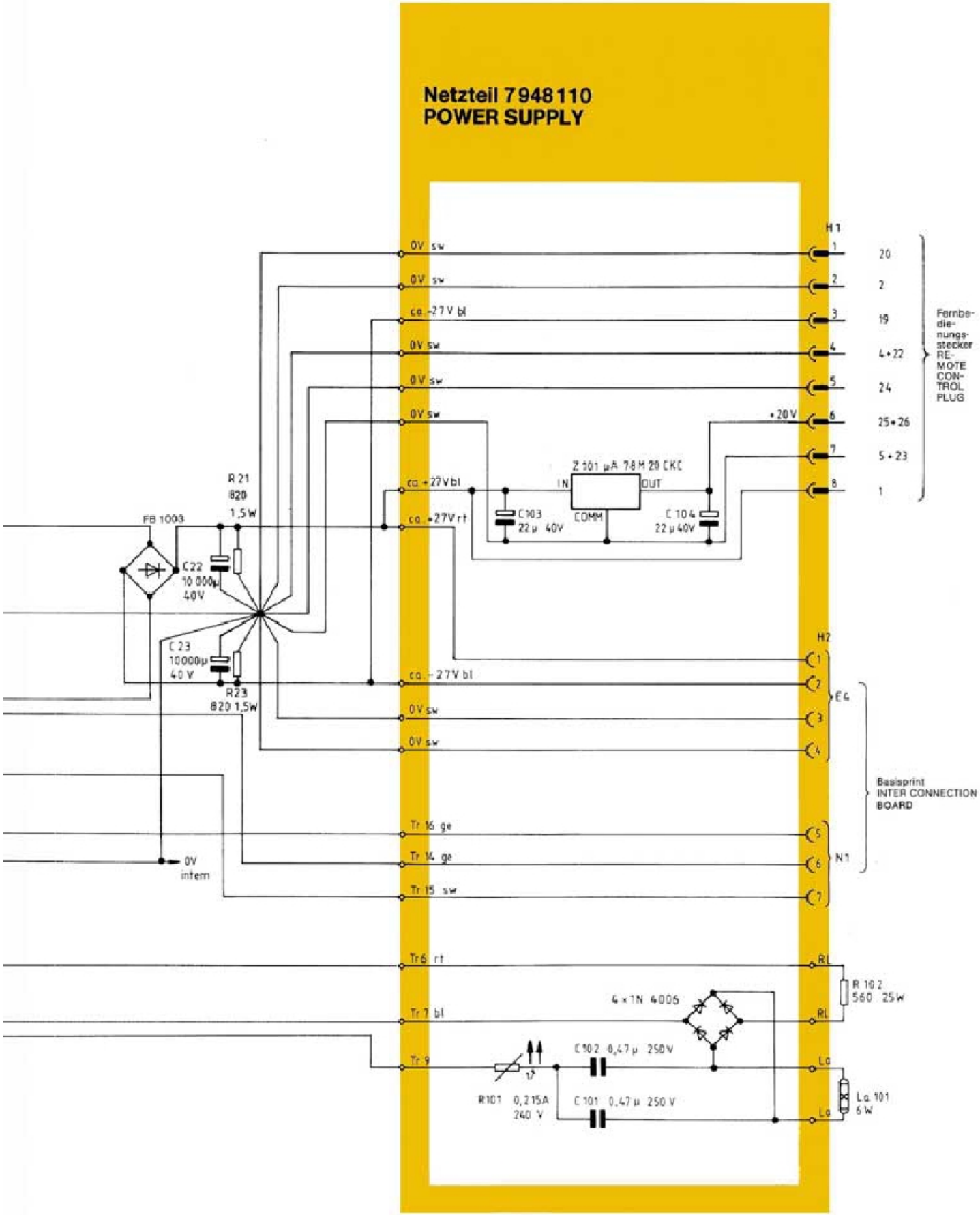
Netzteil 7948110
POWER SUPPLY
H1
0V sw
0V sw
ca. +27V bl
0V sw
0V sw
0V sw
ca. +27V bl
ca. +27V rt
+20V
Z 101 µA 7808 20 CKC
IN
OUT
COMM
C103 22µ 40V
C104 22µ 40V
R21 820 1,5W
FB 1003
C22 10 000µ 40V
C23 10000µ 40V
R23 820 1,5W
0V intern
20
2
19
4+22
24
25+26
5+23
1
Fernbedienungsstecker REMOTE CONTROL PLUG
H2
ca. +27V bl
0V sw
0V sw
E4
Basisprint INTER CONNECTION BOARD
Tr 16 ge
Tr 14 ge
Tr 15 sw
N1
Tr6 rt
Tr 7 bl
Tr 9
4 x 1N 4005
C102 0,47µ 250V
C101 0,47µ 250V
R101 0,215A 240 V
RL
La
R102 560 25W
La 101 6W

Fernstart-Möglichkeiten
REMOTE/START/OPTIONS

T R/NO
R/NC

R
T

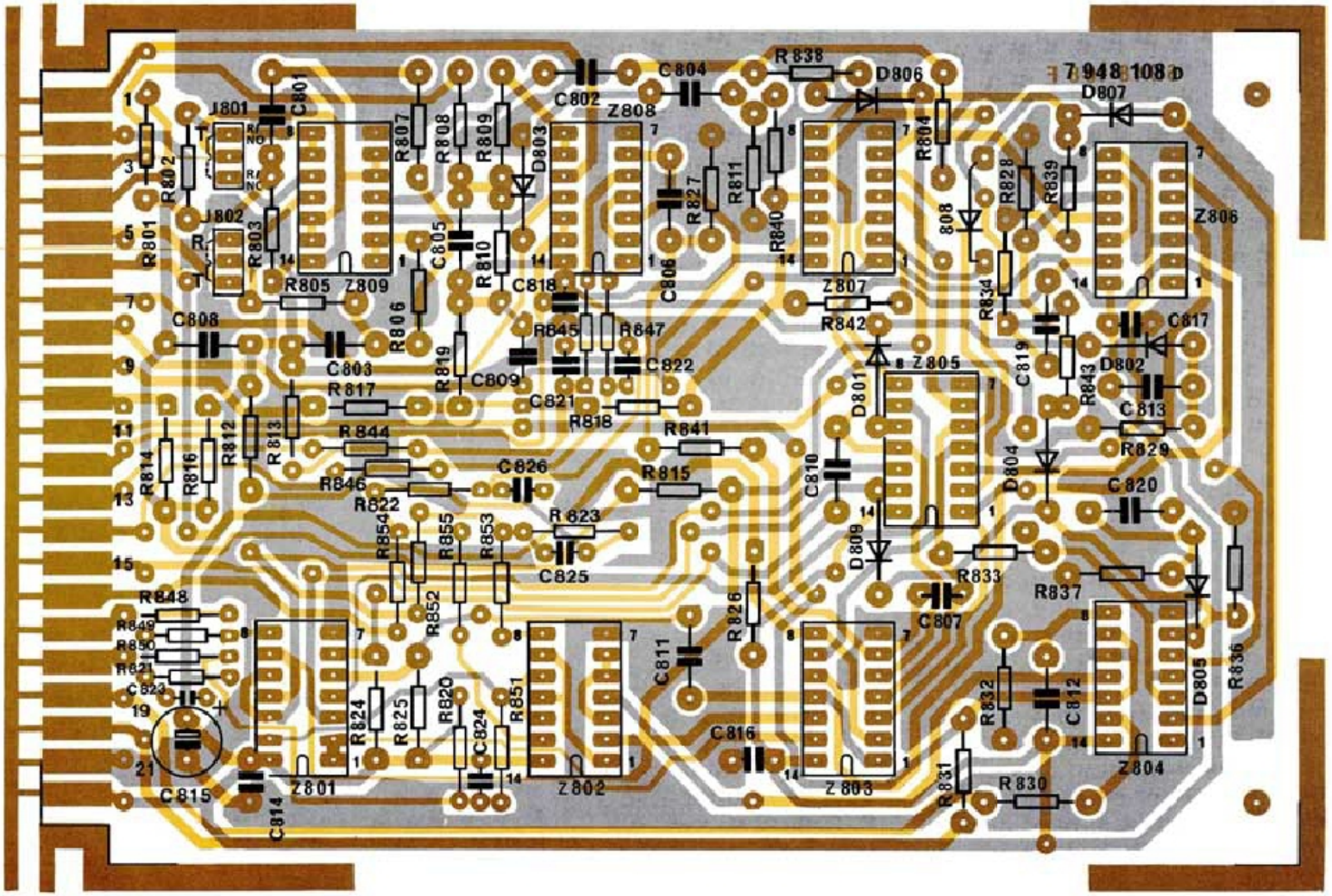

EMT 948
INTERFACE

INTERFACE 7948108

The commands arriving from pushbuttons, switches, and remote control unit are converted into signals required by the control electronics. All connections are activated in the LOW state, i. e., when connected to ground. Open connections are drawn to HIGH by pull-up resistors.

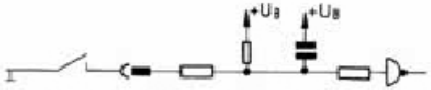

By means of differentiation networks (RC combinations), the Start, Stop, Reverse, and Lift commands produce short impulses only at the moment of switching, causing flipflops to generate the control signals required for the control electronics. The most recently issued command and not (for instance) a continuously depressed button, determines the operating state.

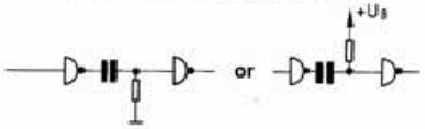

Remote Control Start/Stop, Fader Start

The Start and Stop functions are switched through two pushbuttons in the Remote Control mode. If these functions are to be initiated by a switch or fader contact, the positions of two programming plugs must be changed:

R NO = fader-down contact, normally open
R NC = fader-down contact, normally closed
T NO = pushbutton start (Start/Stop with two pushbuttons)

Switches are to be employed for the Remote Control Only, Local Only, and Mono/Stereo commands. The following modes can be established through the Remote Only and Local Only connections:

Remote Only	Local Only	
Input open	Input open	Local and remote control possible
0 V	Input open	Only remote control possible
Input open	0 V	Only local control possible
0 V	0 V	Operation not possible (can be used to inhibit operation)

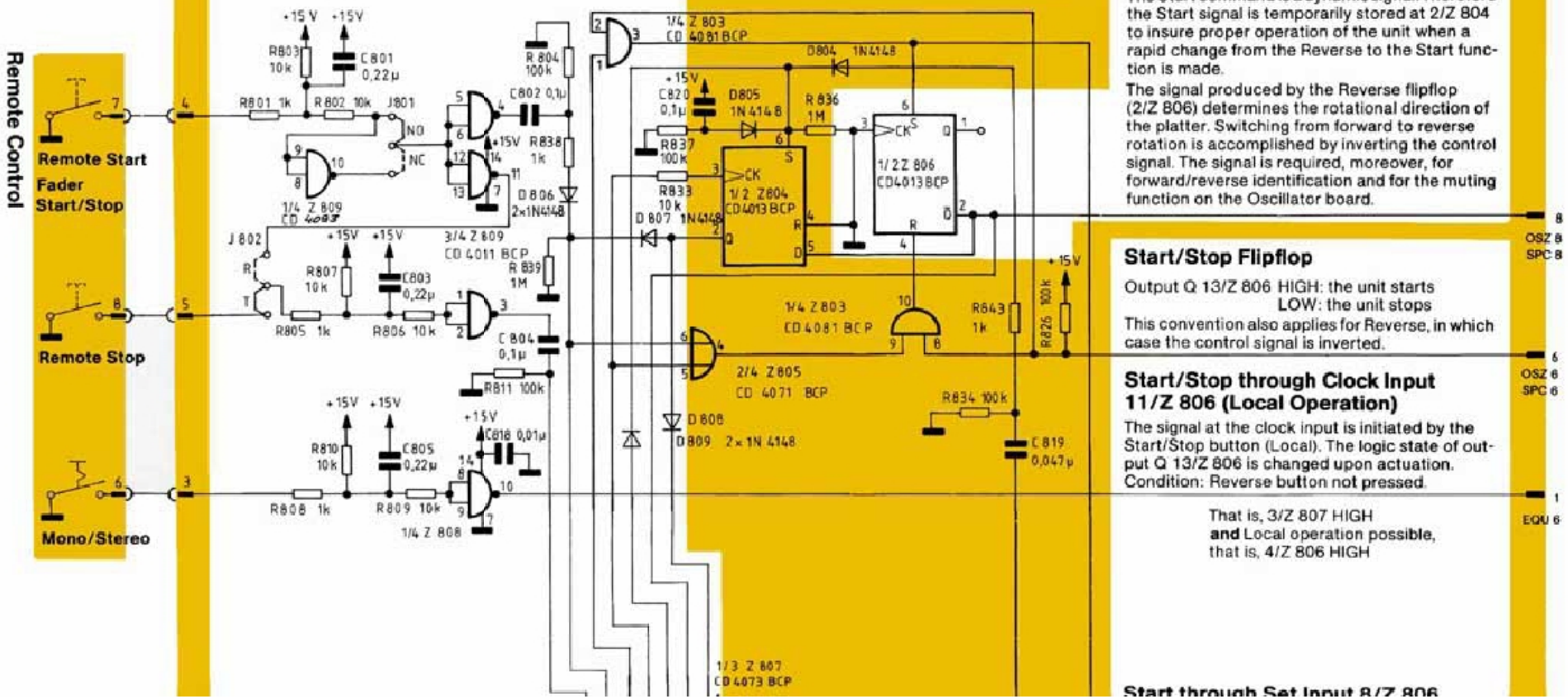

Reverse Flipflop

The Reverse flipflop is set when the Reverse button has been pressed **and** the speed is approx. zero. (The zero-speed signal is produced by the standstill comparator on the Speed Control Board.)

The Reverse flipflop is reset when the speed is approx. zero **and** a new Start command is issued. The Start command is a dynamic signal. Therefore the Start signal is temporarily stored at 2/Z 804 to insure proper operation of the unit when a rapid change from the Reverse to the Start function is made.

The signal produced by the Reverse flipflop (2/Z 806) determines the rotational direction of the platter. Switching from forward to reverse rotation is accomplished by inverting the control signal. The signal is required, moreover, for forward/reverse identification and for the muting function on the Oscillator board.

Start/Stop Flipflop

Output Q 13/Z 806 HIGH: the unit starts
LOW: the unit stops

This convention also applies for Reverse, in which case the control signal is inverted.

Start/Stop through Clock Input 11/Z 806 (Local Operation)

The signal at the clock input is initiated by the Start/Stop button (Local). The logic state of output Q 13/Z 806 is changed upon actuation.
Condition: Reverse button not pressed.

That is, 3/Z 807 HIGH
and Local operation possible, that is, 4/Z 806 HIGH

Start through Set Input 8/Z 806

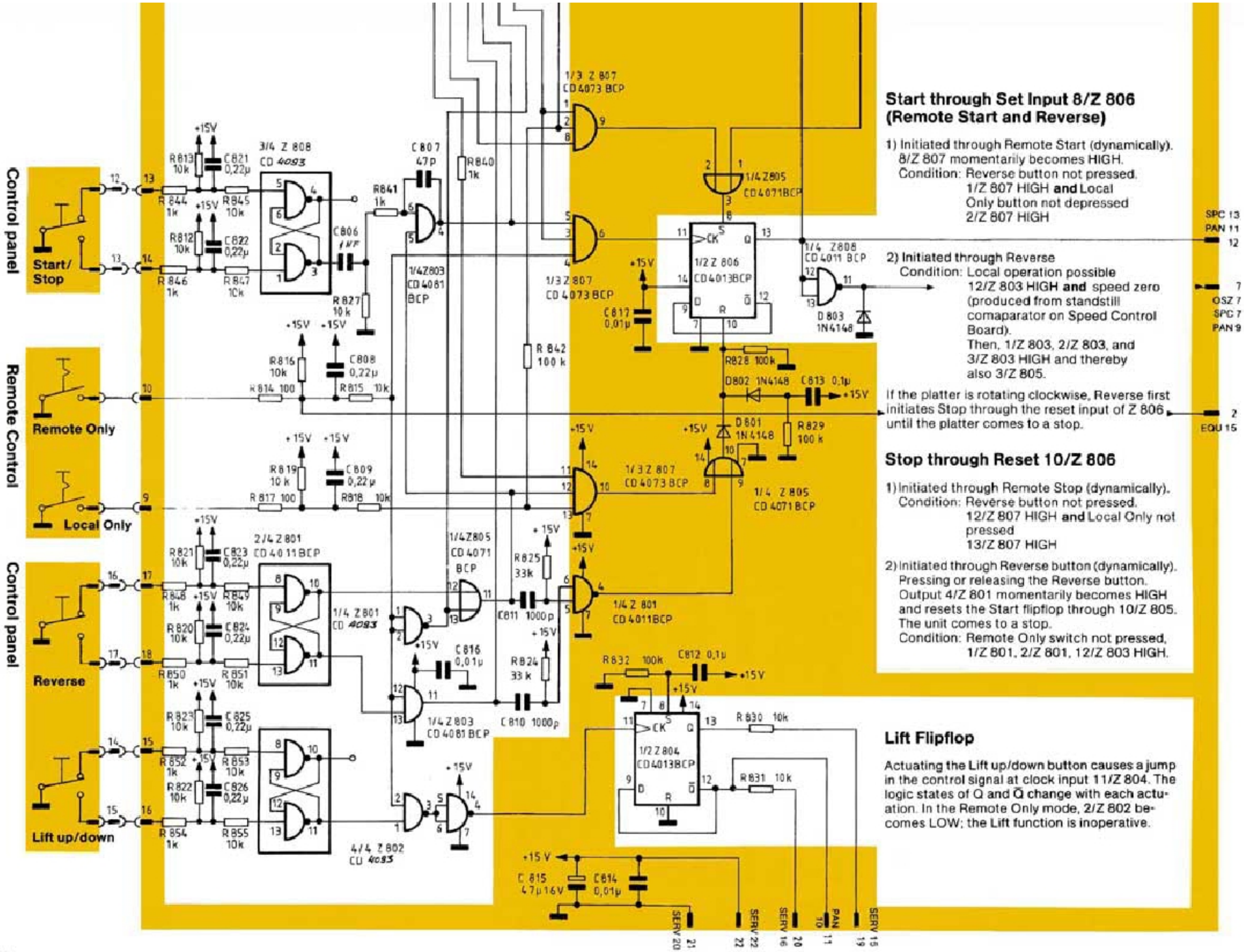
Control panel
Start/ Stop
Remote Control
Remote Only
Local Only
Control panel
Reverse
Lift up/down
Start through Set Input 8/Z 806 (Remote Start and Reverse)
1) Initiated through Remote Start (dynamically). 8/Z 807 momentarily becomes HIGH. Condition: Reverse button not pressed. 1/Z 807 HIGH and Local Only button not depressed 2/Z 807 HIGH
2) Initiated through Reverse Condition: Local operation possible 12/Z 803 HIGH and speed zero (produced from standstill comaparator on Speed Control Board). Then, 1/Z 803, 2/Z 803, and 3/Z 803 HIGH and thereby also 3/Z 805.
If the platter is rotating clockwise, Reverse first initiates Stop through the reset input of Z 806 until the platter comes to a stop.
Stop through Reset 10/Z 806
1) Initiated through Remote Stop (dynamically). Condition: Reverse button not pressed. 12/Z 807 HIGH and Local Only not pressed 13/Z 807 HIGH
2) Initiated through Reverse button (dynamically). Pressing or releasing the Reverse button. Output 4/Z 801 momentarily becomes HIGH and resets the Start flipflop through 10/Z 805. The unit comes to a stop. Condition: Remote Only switch not pressed, 1/Z 801, 2/Z 801, 12/Z 803 HIGH.
Lift Flipflop
Actuating the Lift up/down button causes a jump in the control signal at clock input 11/Z 804. The logic states of Q and Q̄ change with each actuation. In the Remote Only mode, 2/Z 802 becomes LOW; the Lift function is inoperative.
SPC 13
PAN 11
12
7
OSZ 7
SPC 7
PAN 9
2
EQU 15
SERV 20
21
SERV 22
23
SERV 16
20
PAN 10
11
SERV 15
19

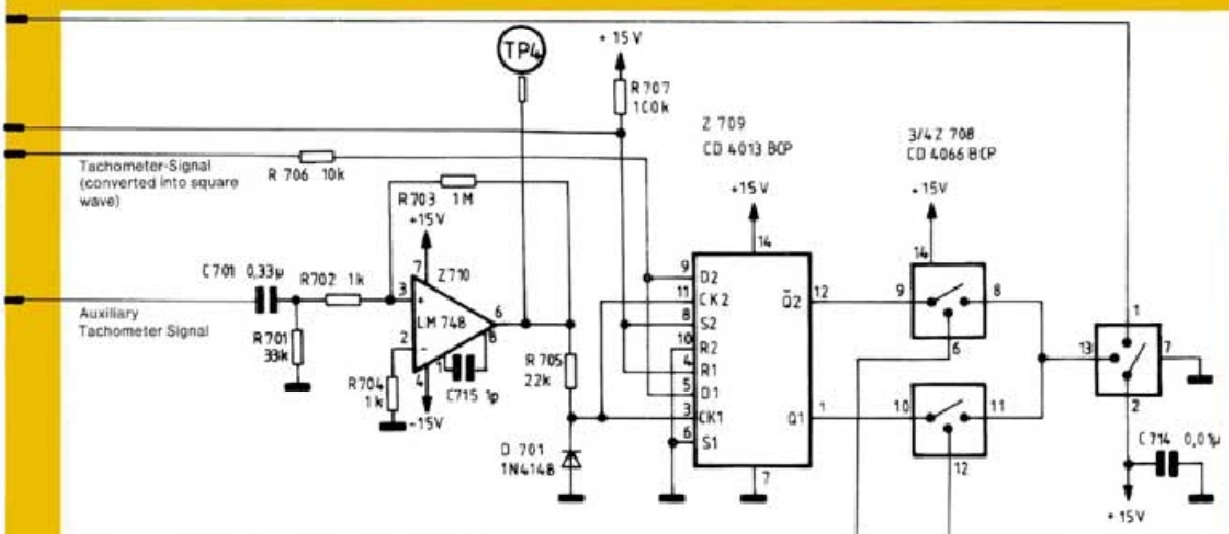

Forward/Reverse Identification

The forward/reverse identification prevents uncontrolled acceleration of the turntable platter opposite to the selected direction. This function is implemented with two identically constructed tachometer generators, the phases of which differ by 90° by reason of their physical location.

Forward Operation (Start pressed)

Pin 12/Z 708 HIGH, switch closed.
Pin 6/Z 708 LOW, switch open.
Tachometer signal (square wave) at D 1 5/Z 709.
Auxiliary tachometer signal (square wave) Ck 1 3/Z 709.

a) Normal case: Start pressed, platter rotates forward.

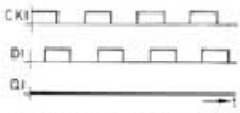

Q 1 1/Z 709 remains LOW. The analog switch with pins 1 — 2/Z 708 remains open.

b) Start pressed. Platter is rotated backwards by hand during cueing.



Q 1 1/Z 709 becomes HIGH. Approx. + 15 V lie at 1/Z 708. This signal causes a braking signal to be produced on the Speed Control Board until the platter stops and then rotates in a forward direction.

Reverse Operation (Reverse pressed)

Pin 12/Z 708 LOW, switch open.
Pin 6/Z 708 HIGH, switch closed.
Forward/reverse identification occurs through output $\overline{Q}2$ 12/Z 709.

- Tachometer signal appears at data input D 2 (pin 9/Z 709).
- Auxiliary tachometer signal appears at clock input Ck 2 (pin 11/Z 709).

a) Normal case: Reverse pressed, platter rotates backwards.

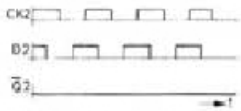

$\overline{Q}2$ LOW. The analog switch with pins 1 — 2/Z 708 remains open.

b) Reverse pressed. Platter is forcefully rotated forwards.



$\overline{Q}2$ HIGH. Approx. + 15 V at 1/Z 708. This signal causes a braking signal to be produced on the Speed Control Board until the platter stops and then rotates in the reverse direction.

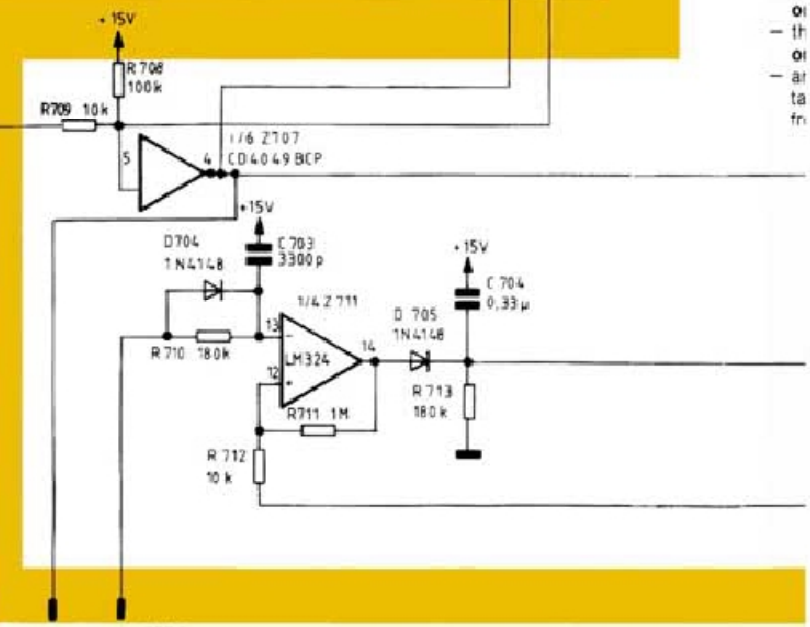

Oszillatorplatine 7948107
OSCILLATOR

SPC 8 INT 8 — 8 — 9 SPC 9 — 5 SPC 5 REM 32

Brake

The brake coil is connected between pins 12 and 10 of the Oscillator Board.

When T 701 conducts, a current flows through the brake coil. The brake engages. When T 701 is cut off, the brake is released.

The brake is engaged in two stages. Normal operation, Stop is pressed:

- Output 15/Z 707 jumps from LOW to HIGH. Output 10/Z 707 remains LOW. Capacitor C 702 charges, the base of transistor T 701 becomes slightly positive. T 701 begins to conduct, the brake is lightly engaged.
- At zero rotational speed, 10/Z 707 also jumps to HIGH, transistor T 701 is conducting, the full braking force is applied.

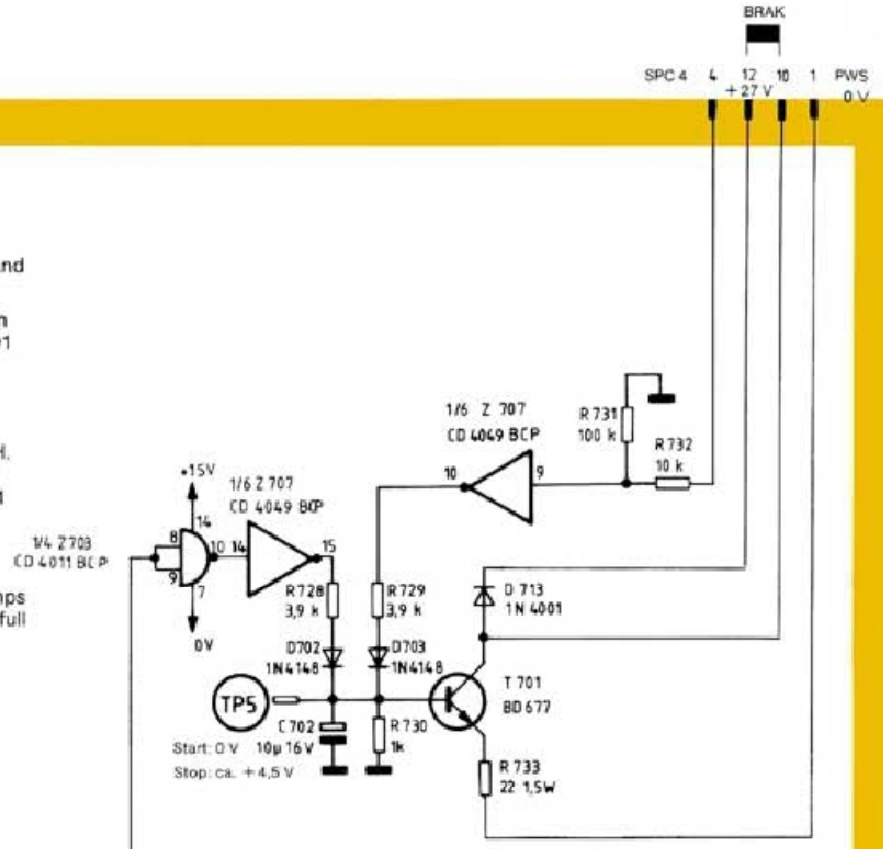

Muting during the Start and Stop Phases

During the Start and Stop phases, the line outputs are muted. In order to improve run-up performances, C 606 (on the Speed Control Board) is shorted during this interval.

Pin 2 of the Oscillator Board: Mute: −15 V, otherwise 0 V
Pin 3 of the Oscillator Board: Mute: 0 V, otherwise − 15 V

The muting function is initiated when:

- the Stop button is pressed. Pin 8 of the board LOW, **or**
- the Reverse button is pressed. Pin 8 of the board LOW, **or**
- an excessive phase-angle difference exists between the tachometer signal and reference signal. This signal is derived from the Pulsphase signal and appears at TP 3.

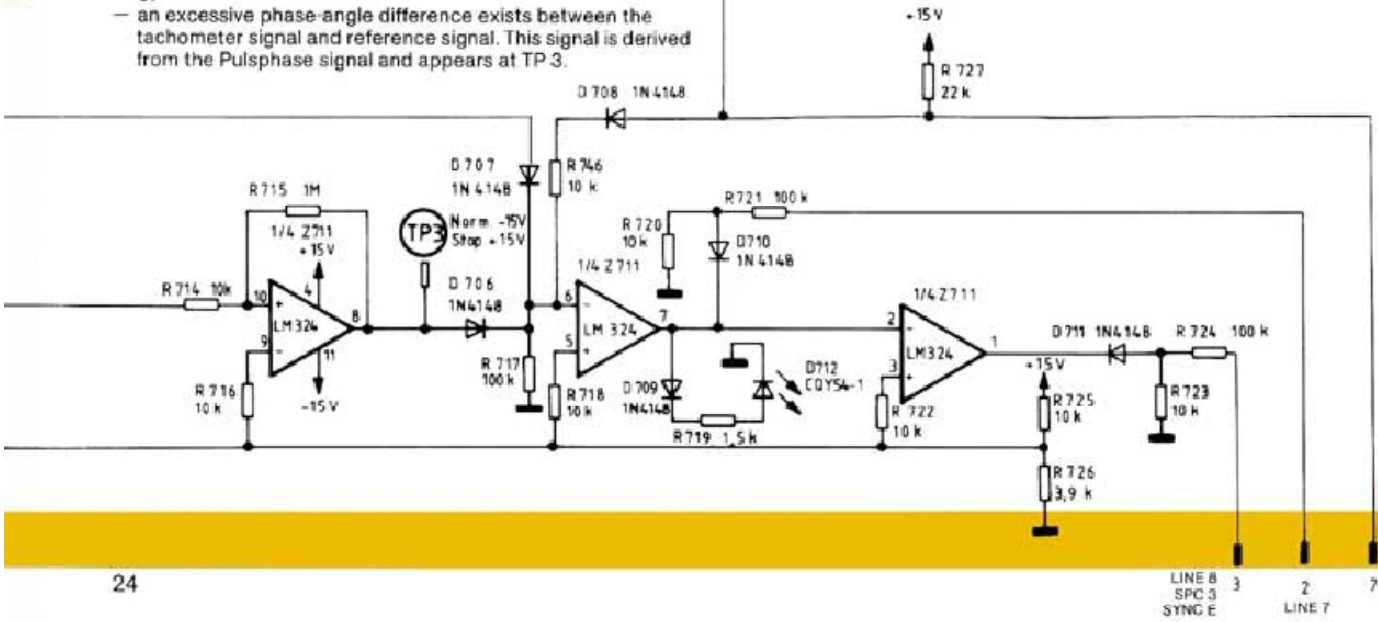

LINE 8
SPC 3
SYNC E
3
2
LINE 7
7
SPC 7
INT 7
PAN 9

Oszillatorplatine 7 948 107
OSCILLATOR

VCO (Vario)

Z 702 functions as a VCO (Voltage Controlled Oscillator). The higher the voltage at 3/Z 701, the lower the frequency at output 3/Z 702. Z 701 performs impedance transformation. Square-wave pulses appear at output 3/Z 702 (TP 1). Z 702 is activated by LOW on pin 19 of the board (≙ Vario), f = 7.68 kHz ±25 %. The quartz is switched off simultaneously by LOW at 6/Z 707.

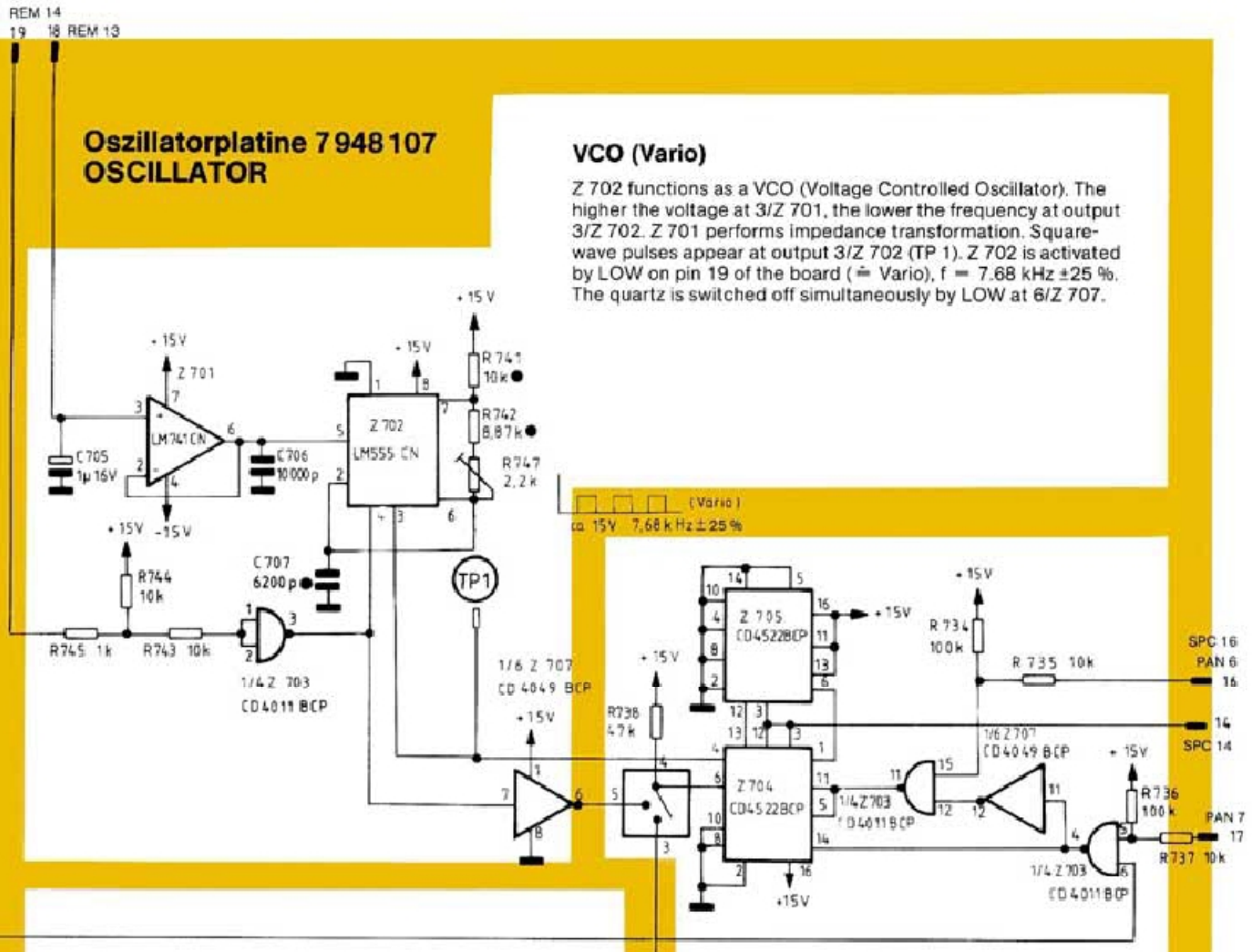

Quartz Oscillator

The signal from the quartz oscillator appears at 2/Z 707, f = 3.932 MHz. (Note: measurements at this point can slightly detune the oscillator.) This frequency is divided down to f = 7,68 kHz by Z 706 (TP 2).

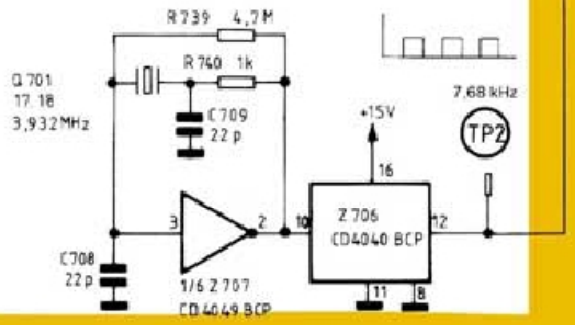

Frequency Divider

Z 704 and Z 705 are connected as programmable frequency dividers. The signal from the quartz oscillator or, during Vario operation, the signal from the VCO is divided down to fixed values which determine the rotational speed of the turn-table platter. The reference signal for the Speed Control Board appears at 12/Z 704. The divisor is determined by logic levels at pins 16 and 17 of the board.

Speed:	33	45	78	min^{-1}
Pin 16:	HIGH	HIGH	LOW	
Pin 17:	LOW	HIGH	HIGH	

In order to obtain the rotational speed of 33 min for Reverse operation, 6/Z 703 is connected to 5/Z 707. This signal is HIGH for forward operation, LOW for Reverse operation.

Reference signal (impulse):

f_{33} = 284,2 Hz
f_{45} = 384 Hz
f_{78} = 334 Hz

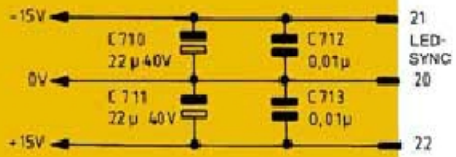

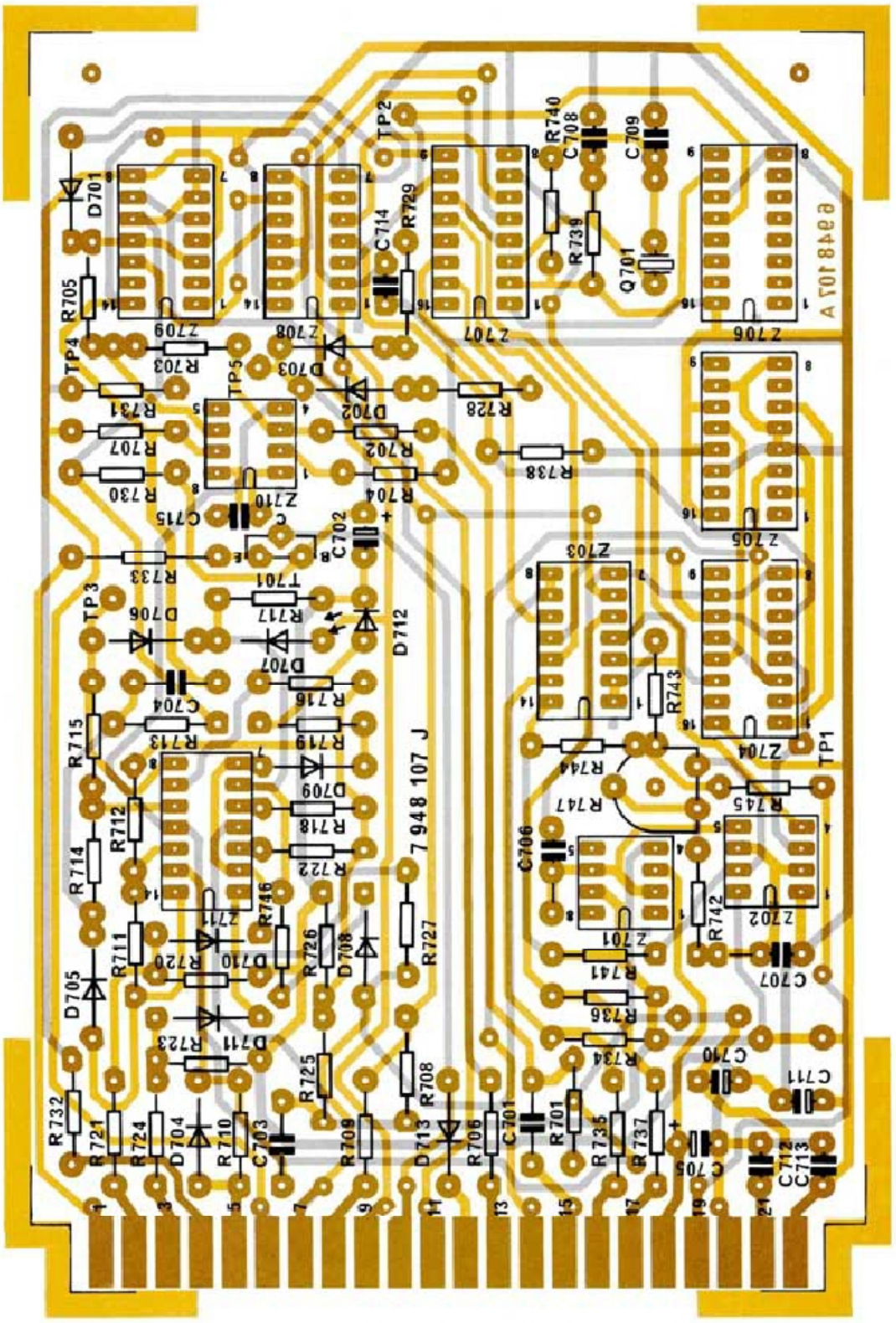

EMT 948
OSCILLATOR

LED SYNC Indicator

Muting Signal OSC 3 is used for driving the SYNC indicator LED. It is fed to the base of T 301 (on the SYNC board 7 938 054). The LED at the rim of the turntable therefore illuminates when the tachometer signal is in phase with the reference signal.

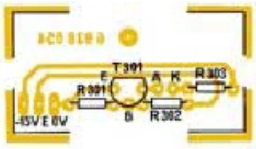

Sync-Anzeige
SYNC INDICATOR
7 938 054

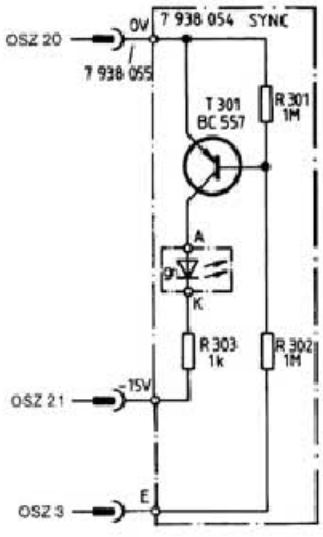

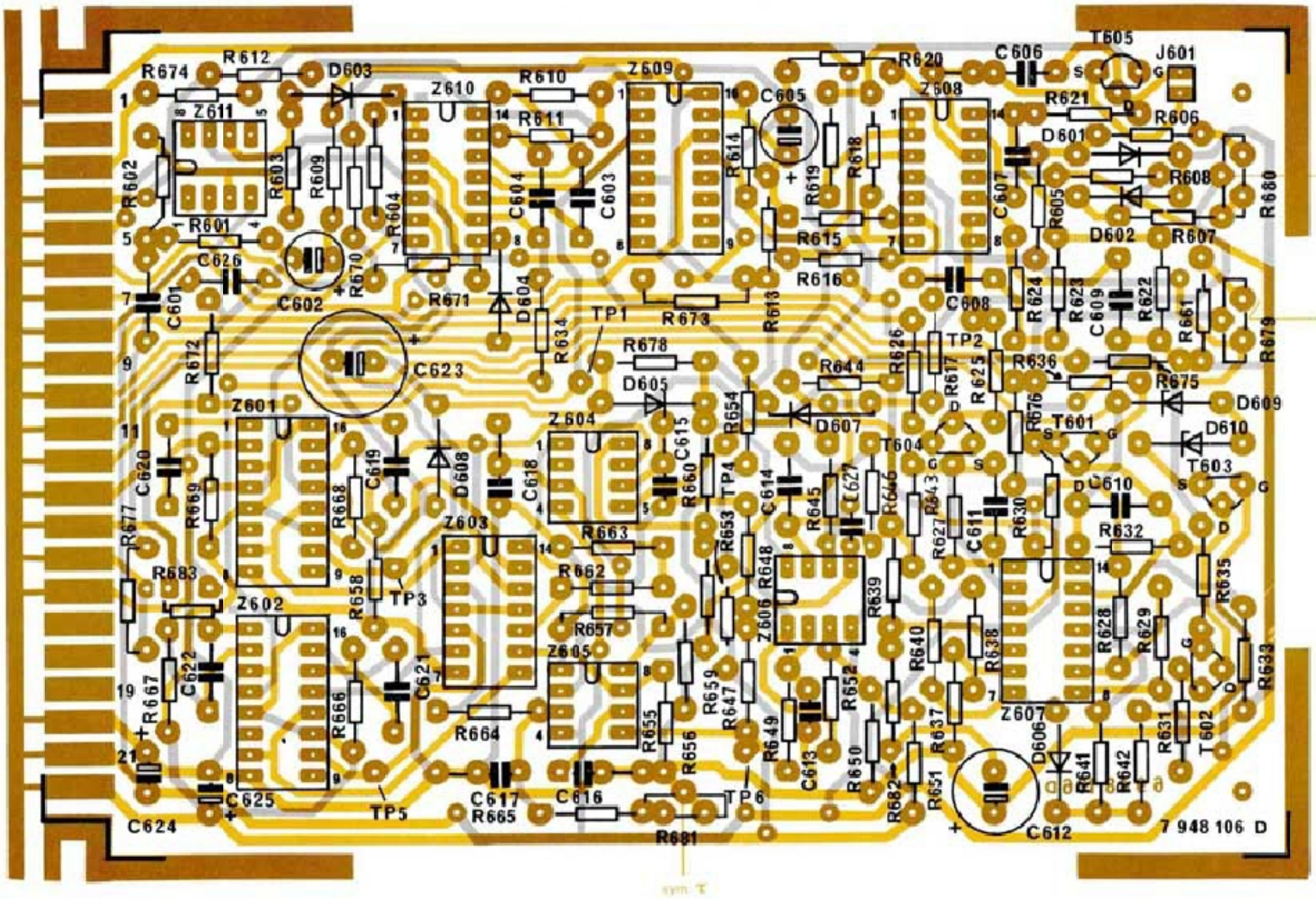

EMT 948
Regelplatine
SPEED CONTROL

Regelplatine 7948106
SPEED CONTROL

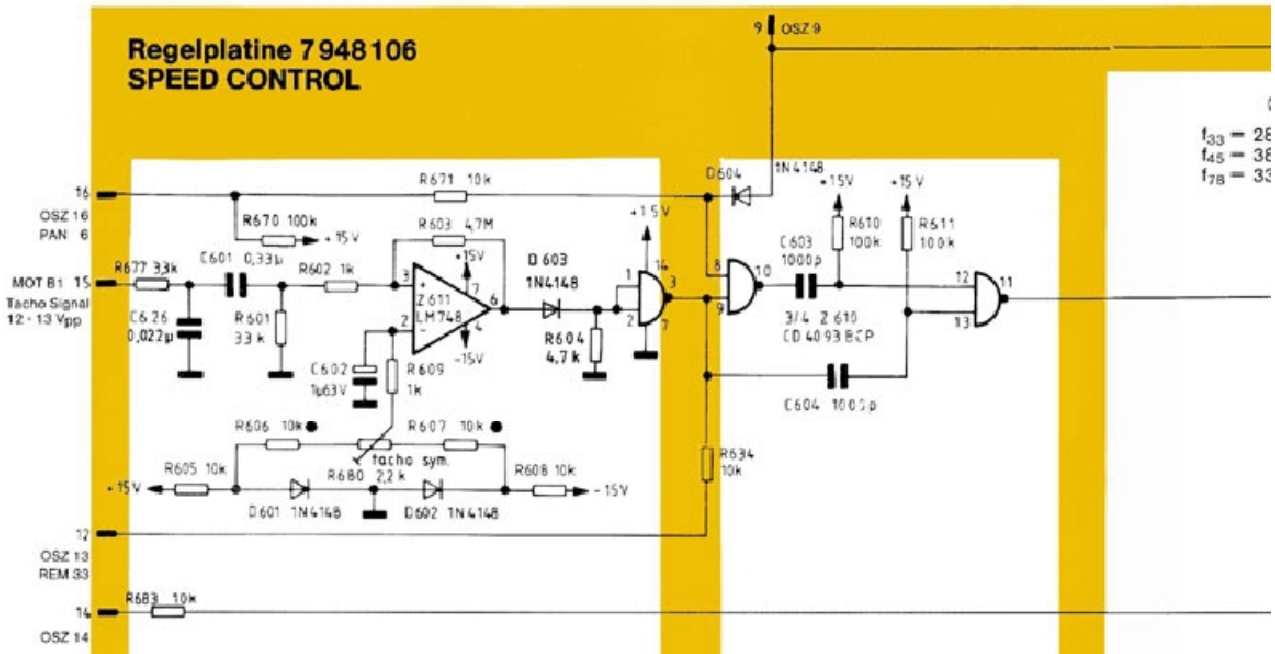

Tacho-Signal-Umformung

Z 611 ist als Schmitt-Trigger geschaltet. Das sinusförmige Tacho-Signal wird in ein Rechteck-Signal mit dem Tastverhältnis 1 : 1 umgewandelt, negative Signalanteile werden mit D 603 kurzgeschlossen. Das Tastverhältnis wird mit R 680 eingestellt.

Die Einstellung erfolgt so, daß nach der F/U-Wandlung des Tacho-Signals eine minimale Treppenspannung entsteht (Anschl. 1 der Platine, siehe unten).

Tachosignal (Anschluß 15):

f_{33} = 142,2 Hz
f_{45} = 192 Hz
f_{78} = 334 Hz

Frequenzverdopplung

An Ausgang 11/Z 610 liegen Nadel-Impulse (TP 1) der doppelten Tachofrequenz bei den Geschwindigkeiten 33 und 45 min^{-1}. Bei 78 min^{-1} ist die Frequenz der Impulse gleich der Tachofrequenz (Eingang 8/Z 610 = "0"). Die Pulsdauer wird durch die RC-Glieder C 603, R 610 und C 604, R 611 bestimmt.

R 680 (tacho sym.)

- Maschine abschalten.
- Regelplatine auf Verlängerungsprint setzen.
- Maschine einschalten. Geschwindigkeit 33 1/3 wählen.
- An Anschluß 1 der Platine oder Anschluß 31 des Fernbedienungssteckers (F/U-Information) Oszilloskop anschließen (y = 10 mV/div; x = 2 ms/div). Dabei hochohmigen, kapazitätsarmen Tastkopf verwenden, da sonst unter Umständen HF-Einstreuungen auftreten.
- Start drücken.
- Mit R 680 (tacho sym.) minimale Sägezahn-Amplitude einstellen, <20 mV_{pp}

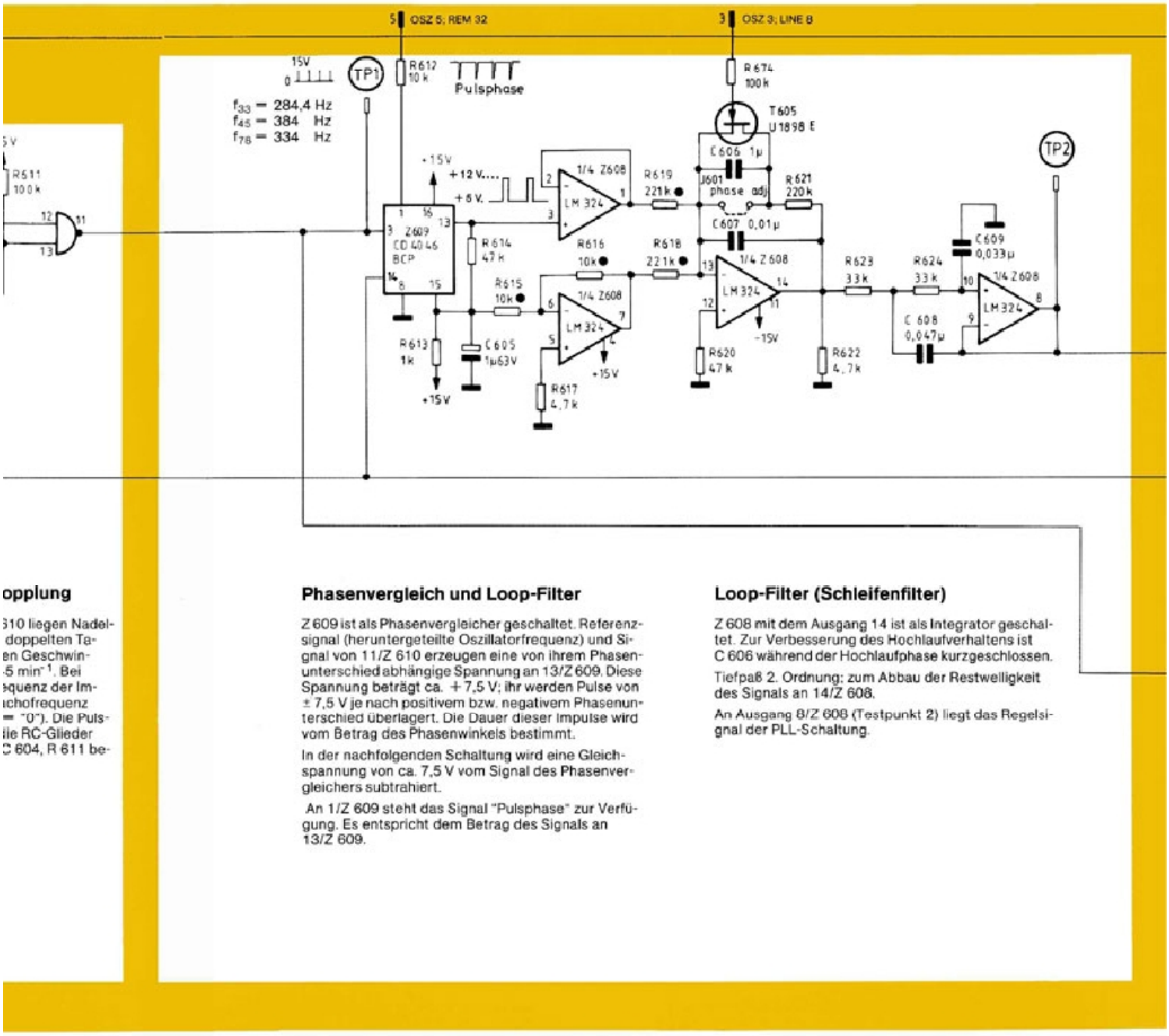

Phasenvergleich und Loop-Filter

Z 609 ist als Phasenvergleicher geschaltet. Referenzsignal (heruntergeteilte Oszillatorfrequenz) und Signal von 11/Z 610 erzeugen eine von ihrem Phasenunterschied abhängige Spannung an 13/Z 609. Diese Spannung beträgt ca. + 7,5 V; ihr werden Pulse von ± 7,5 V je nach positivem bzw. negativem Phasenunterschied überlagert. Die Dauer dieser Impulse wird vom Betrag des Phasenwinkels bestimmt.

In der nachfolgenden Schaltung wird eine Gleichspannung von ca. 7,5 V vom Signal des Phasenvergleichers subtrahiert.

An 1/Z 609 steht das Signal "Pulsphase" zur Verfügung. Es entspricht dem Betrag des Signals an 13/Z 609.

Loop-Filter (Schleifenfilter)

Z 608 mit dem Ausgang 14 ist als Integrator geschaltet. Zur Verbesserung des Hochlaufverhaltens ist C 606 während der Hochlaufphase kurzgeschlossen.

Tiefpaß 2. Ordnung; zum Abbau der Restwelligkeit des Signals an 14/Z 608.

An Ausgang 8/Z 608 (Testpunkt 2) liegt das Regelsignal der PLL-Schaltung.

Achtung!

In den Geräten Nr. 44 151 bis Nr. 44 180 ist das Potentiometer R 681 (sym.↕) nicht eingebaut. Dies hat zur Folge, daß bei Stillstand (Stop) der Maschine ein kleines Moment auf den Plattenteller wirken kann. Diese Maschinen werden für den Betrieb mit R 679 (phase lock sym.) abgeglichen.

R 679 (phase lock sym.)

- Maschine abschalten.
- Regelplatine auf Verlängerungsprint setzen. Jumper J 601 kurzschließen.
- Oszilloskop an Anschluß 5 der Platine (Signal Pulsphase) oder Stift 32 vom Fernbedienstecker anschließen (y = 5 V/div; x = 5 ms/div.).
- Maschine einschalten. Start drücken.
- Mit R 679 phase lock sym. minimale Pulspause einstellen (siehe Signal Pulsphase in Schaltbild).
- Maschine abschalten. Kurzschluß J 601 aufheben und Regelplatine einsetzen.

Für den Stillstand erfolgt kein Abgleich.

F/U-Konverter "Referenz"

Die Nadelimpulse des "Referenzsignals" stoßen nacheinander 2 Monoflops an, die Impulse konstanter Dauer abgeben: 7/Z 601, 10/Z 601.

– 7/Z 601 HIGH. Über Analogschalter 1-2/Z 603 ist 7/Z604 ebenfalls HIGH (Sample Phase der Spannung am RC-Glied R 663/C 618).
LOW. Über Analogschalter 1-2/Z 603 ist 7/Z 604 ebenfalls LOW (Hold Phase der Spannung am RC-Glied R 663/C 618).

Der Analogschalter 1-2/Z 603 wird von Anschluß 13/Z 603 gesteuert. Er öffnet bei Stop und schließt bei Start.

– 10/Z 601 HIGH Der Analogschalter 10-11/Z 603 wird durchgeschaltet. Am RC-Glied R 663, C 618 liegen ca. 12 V.
LOW Schalter 10-11/Z 603 wird geöffnet, das RC-Glied R 663, C 618 entlädt sich.

– Z 603/Z 604/Z 605 arbeiten als Sample- und Hold-Stufe, die Spannung am RC-Glied wird während der Sample Phase an C 615 übernommen und während der Hold Phase am Ausgang 5/Z 604 übergeben und konstant gehalten.

Am Ausgang 5/Z 604 ist eine von der Frequenz des Referenzssignals abhängige Spannung.

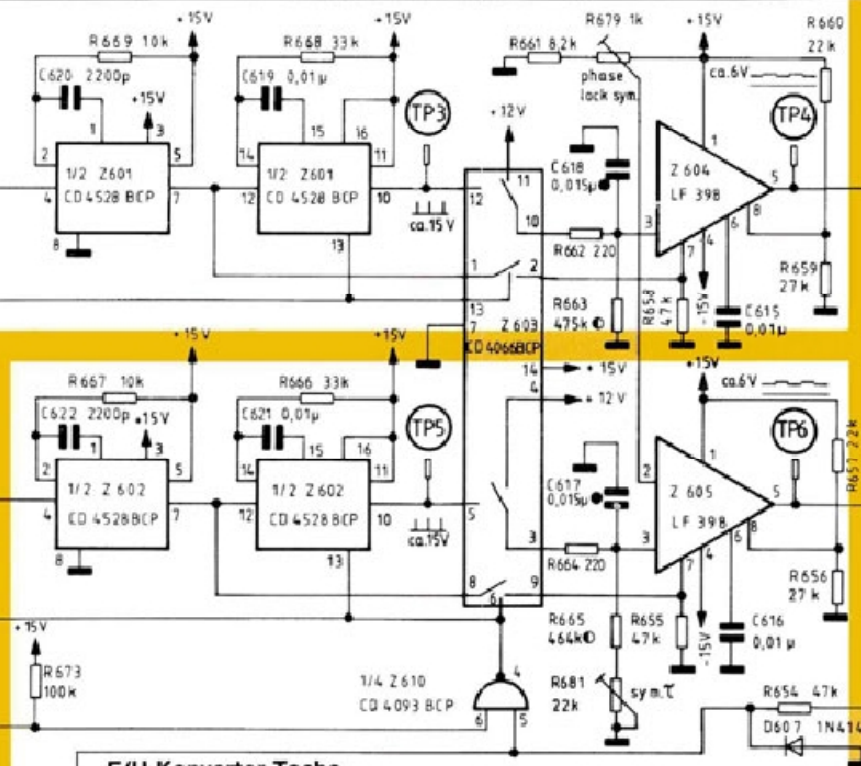

R 679 (phase lock sym.)

– Maschine abschalten.
– Regelplatine auf Verlängerungsprint setzen.
– Maschine einschalten. Stop drücken.
– An Pin 10 der Platine mit R 679 0 V einstellen.

siehe auch Seite 27

R 681 (sym.τ)

– Maschine abschalten.
– Regelplatine auf Verlängerungsprint setzen. Jumper 601 kurzschließen.
– Oszilloskop an Anschluß 5 der Platine (Signal Pulsphase), oder Anschluß 32 des Fernbediensteckers (y = 5 V/div; x = 5 ms/div).
– Maschine einschalten. Start drücken.
– Mit R 681 (sym.τ) minimale Pulspause einstellen (siehe Signal Pulsphase im Schaltbild S 27).
– Maschine abschalten. Kurzschluß J 601 aufheben und Regelplatine einsetzen.

siehe auch Seite 27

F/U-Konverter-Tacho

Die F/U-Wandlung des Tacho-Signals wird wie beim F/U-Konverter "Referenz" durchgeführt. Unterschiede:

– Der Analogschalter 8-9/Z 603 öffnet bei Stop verzögert, und zwar bei der Drehzahl ca. 0. Dadurch wird der Motor solange entgegen der Drehrichtung beschleunigt, bis er steht.
– R 681 (sym.τ). Mit R 681 werden identische Zeitkonstanten der beiden F/U-Wandler eingestellt.

R672 100k

Tacho	F/U-Wandlung	Referenzsignal (Tachosignal)
4/Z 601 (4/Z 602)		Referenzsignal (Tachosignal)
7/Z 601 (7/Z 602)	HIGH LOW	Sample Phase für Z 604 (Z 605) Hold Phase für Z 604 (Z 605)
10/Z 601 (10/Z 602)	HIGH LOW	LOAD RC R 663/C 618 (R 665, R 681, C 617) DISCHARGE RC
RC-Glied 3/Z 604 (3/Z 605)		(nur mit hochohmigem, kapazitätsarmem Tastkopf meßbar).

INT 12 PAN 11 13 4 OSZ 4 7 OSZ 7 INT 7 PAN 9 5 OSZ 6 INT 6

Summenpunkt

Die Differenz der Signale aus den F/U-Konvertern liegt am Ausgang 7/Z 606. An 2/Z 607 wird dann die Summe mit dem Regelsignal aus der PLL-Schaltung gebildet. T 604 sperrt bei Stop und leitet bei Start.

Regelsignal

An 14/Z 607 steht das Regelsignal zur Verfügung. Am Eingang 13/Z 607 ist bei START T 601 durchgeschaltet und T 602 sperrt. Bei Reverse leitet T 602 und T 601 ist gesperrt.

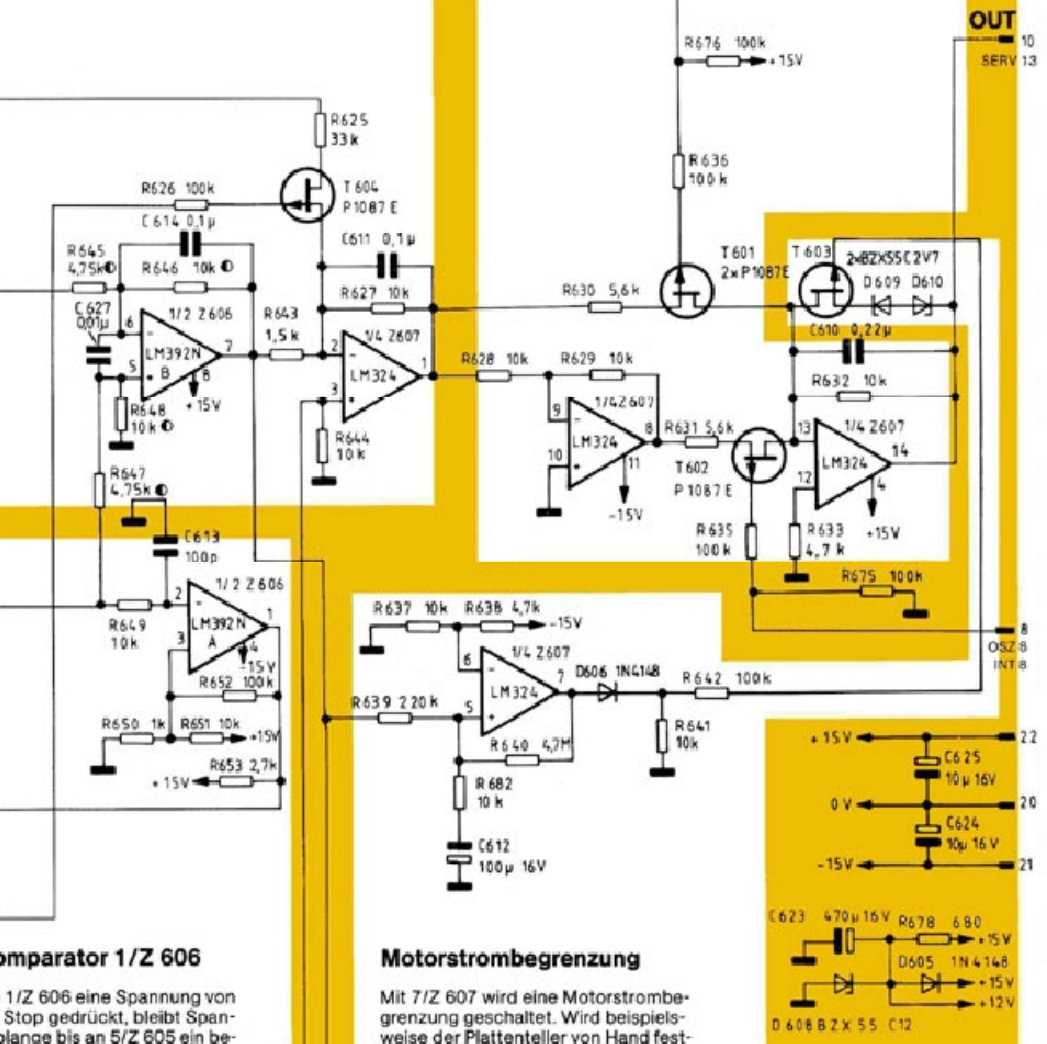

Stillstandskomparator 1/Z 606

Bei Start liegt an 1/Z 606 eine Spannung von ca. − 15 V. Wird Stop gedrückt, bleibt Spannung erhalten, solange bis an 5/Z 605 ein bestimmter Spannungswert (ca. 1,5 V) unterschritten wird. Der Komparator springt auf ca. + 15 V. Mit diesem Signal wird der F/U-Wandler für das "Tacho"-Signal abgeschaltet.

Motorstrombegrenzung

Mit 7/Z 607 wird eine Motorstrombegrenzung geschaltet. Wird beispielsweise der Plattenteller von Hand festgehalten, lädt sich C 612 auf bis zum Überschreiten der Schwellwertspannung ca. 10 V. Ausgang 7/Z 607 springt auf ca. − 15 V, das GATE Potential von T 603 sinkt auf ca. 0 V, T 603 leitet. Damit wird das Regelsignal auf ca. 3 V begrenzt.

Regelplatine 7948106
SPEED CONTROL

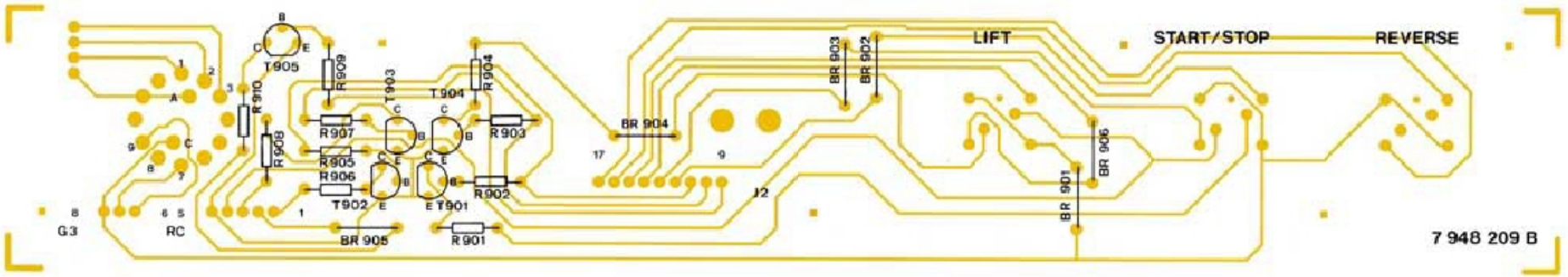

EMT 948
Tastenfeld 7 948 209
PUSH BUTTON BOARD

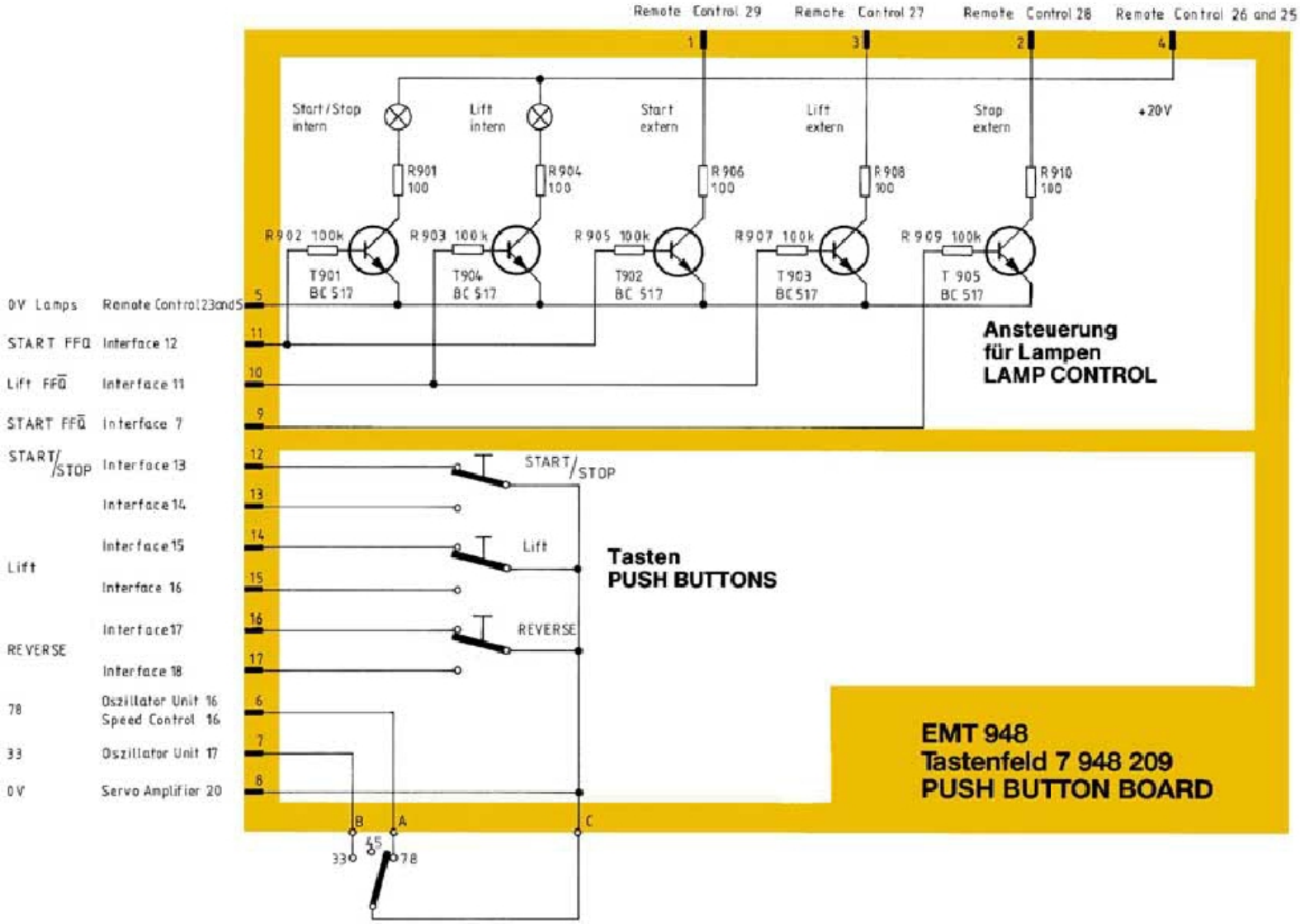
Remote Control 29
Remote Control 27
Remote Control 28
Remote Control 26 and 25
1
3
2
4
Start/Stop intern
Lift intern
Start extern
Lift extern
Stop extern
+20V
R901 100
R904 100
R906 100
R908 100
R910 100
R902 100k
R903 100k
R905 100k
R907 100k
R909 100k
T901 BC 517
T904 BC 517
T902 BC 517
T903 BC 517
T 905 BC 517
0V Lamps
Remote Control 23 and 5
START FFQ
Interface 12
Lift FFQ
Interface 11
START FFQ
Interface 7
START/STOP
Interface 13
Interface 14
Interface 15
Lift
Interface 16
Interface 17
REVERSE
Interface 18
78
Oszillator Unit 16
Speed Control 16
33
Oszillator Unit 17
0V
Servo Amplifier 20
5
11
10
9
12
13
14
15
16
17
6
7
8
START/STOP
Lift
REVERSE
B
A
C
45
33
78
Ansteuerung
für Lampen
LAMP CONTROL
Tasten
PUSH BUTTONS
EMT 948
Tastenfeld 7 948 209
PUSH BUTTON BOARD

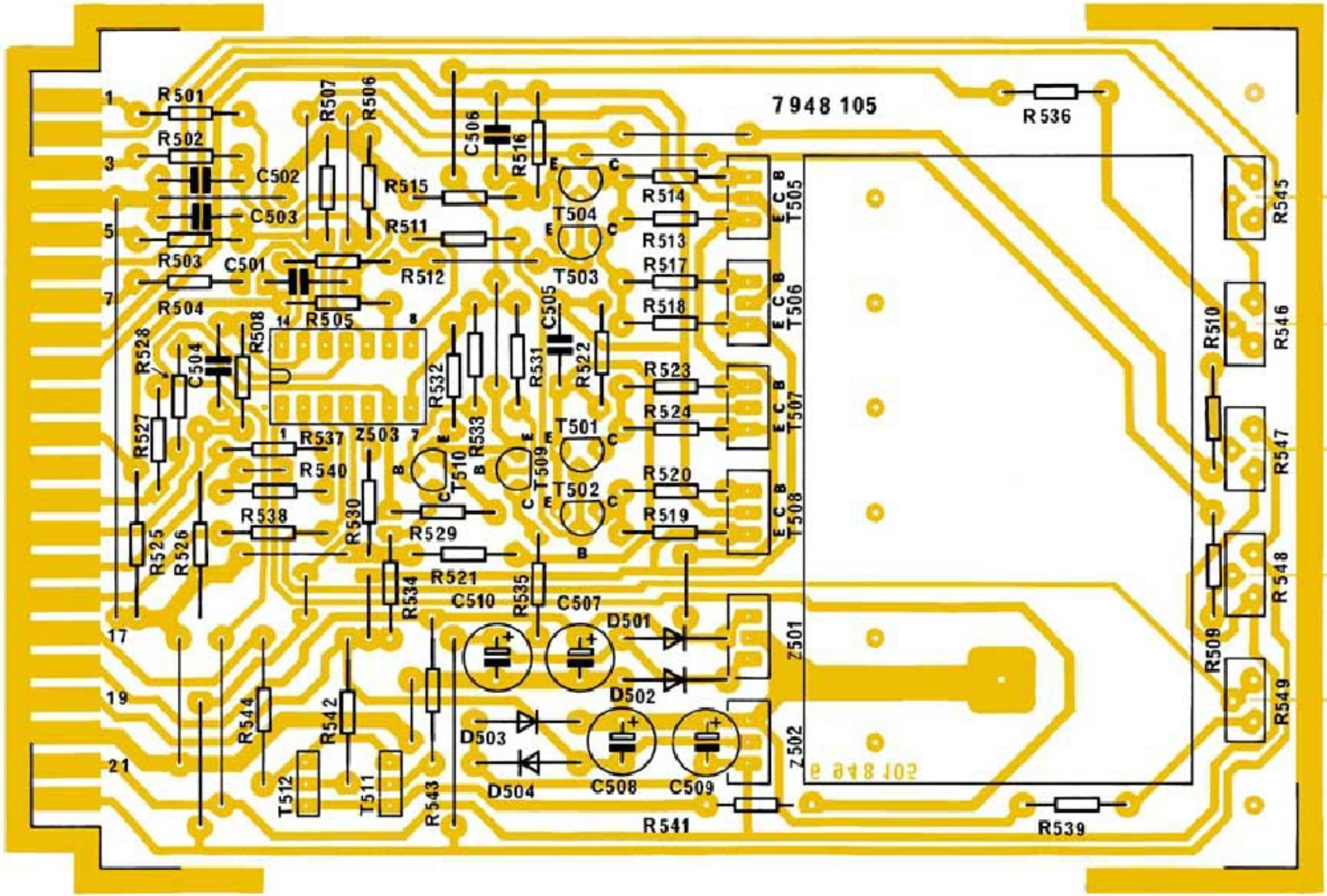

EMT 948
Endstufen-Platine
SERVO AMPLIFIER

Endstufen-Platine 7 948 105
SERVO AMPLIFIER

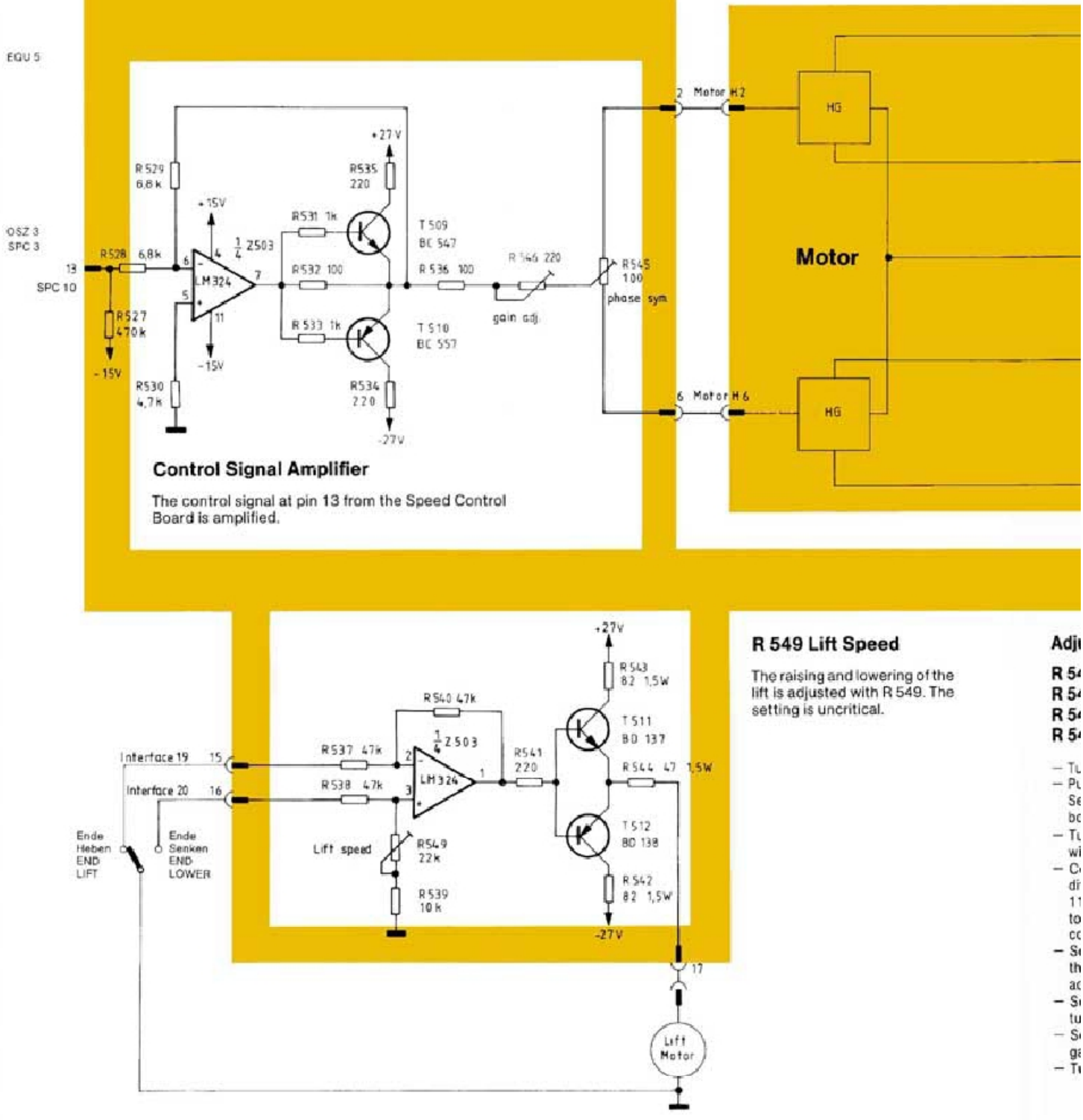

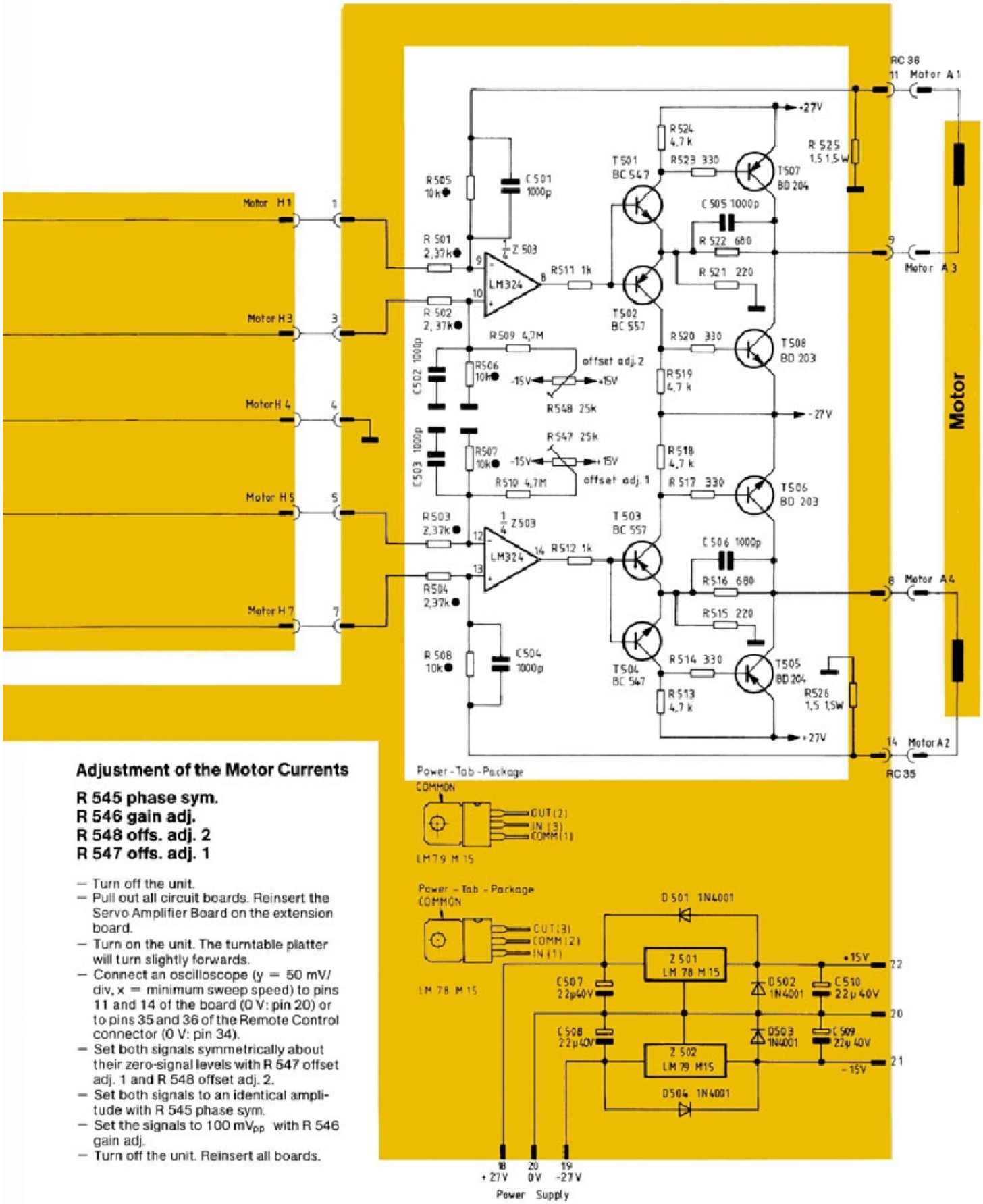

Adjustment of the Motor Currents

R 545 phase sym.
R 546 gain adj.
R 548 offs. adj. 2
R 547 offs. adj. 1

- Turn off the unit.
- Pull out all circuit boards. Reinsert the Servo Amplifier Board on the extension board.
- Turn on the unit. The turntable platter will turn slightly forwards.
- Connect an oscilloscope (y = 50 mV/div, x = minimum sweep speed) to pins 11 and 14 of the board (0 V: pin 20) or to pins 35 and 36 of the Remote Control connector (0 V: pin 34).
- Set both signals symmetrically about their zero-signal levels with R 547 offset adj. 1 and R 548 offset adj. 2.
- Set both signals to an identical amplitude with R 545 phase sym.
- Set the signals to 100 mV_{pp} with R 546 gain adj.
- Turn off the unit. Reinsert all boards.

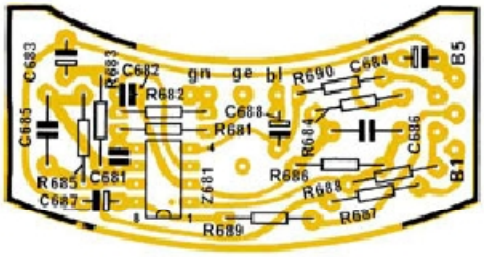

Sicht auf Bauelementeseite
COMPONENT SIDE VIEW

EMT 948
Tachoverstärker
TACHO AMPLIFIER

Sicht auf Leiterbahnseite
CONNECTOR SIDE VIEW

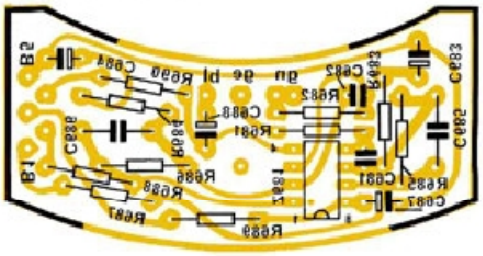



Sicht auf Leiterbahnseite
CONNECTOR SIDE VIEW

EMT 948
MOTOR

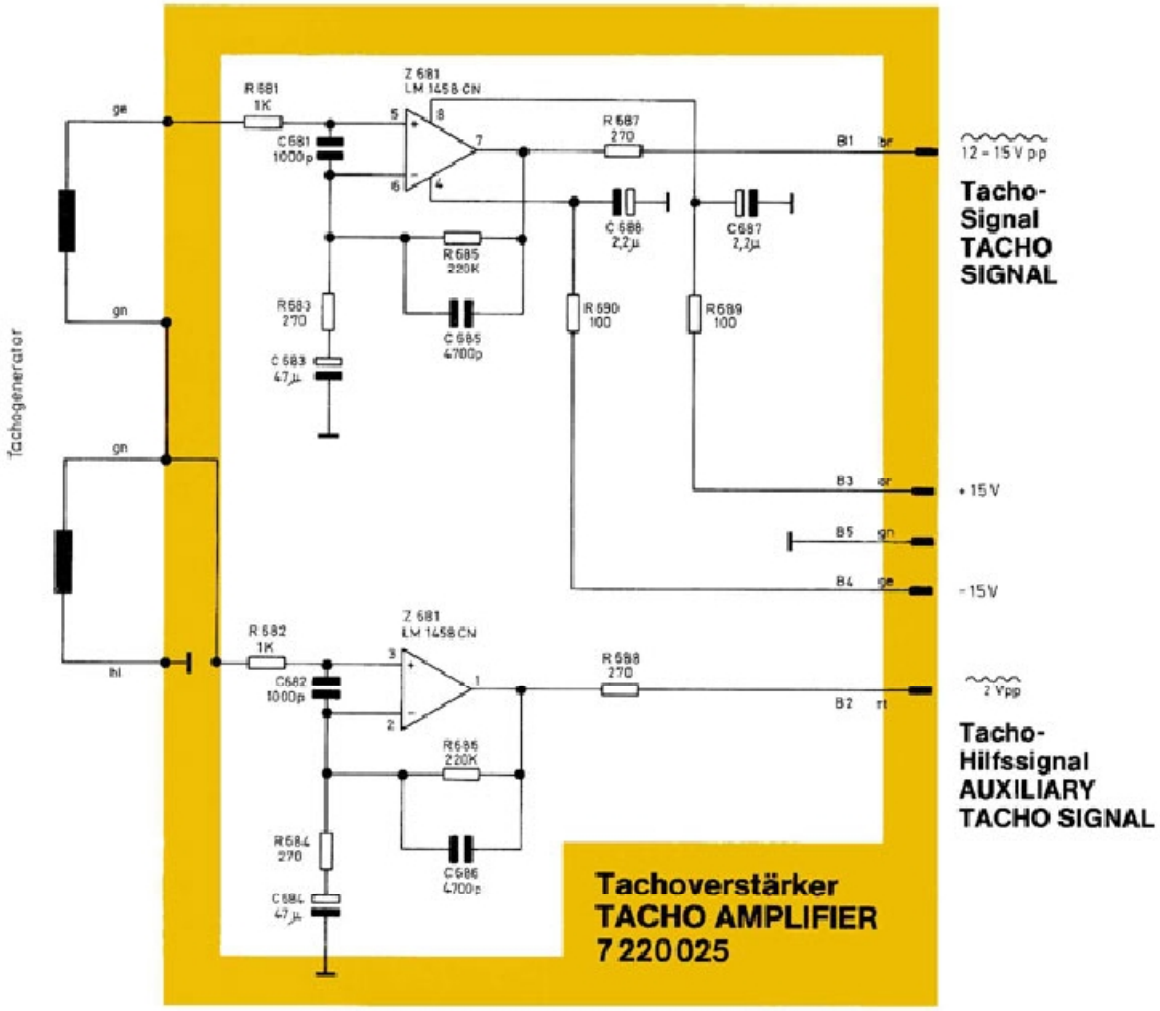

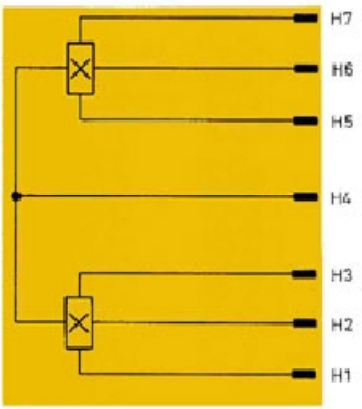

Anschlüsse Hallgeneratoren
HALL ELEMENTS CONNECTIONS

MOTOR 9220000

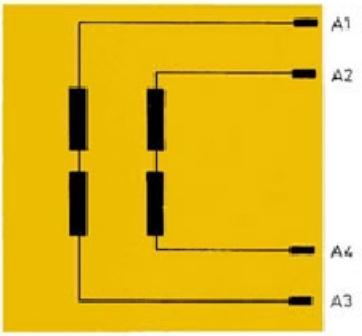

Anschlüsse Motorwicklungen
MOTOR COILS CONNECTIONS

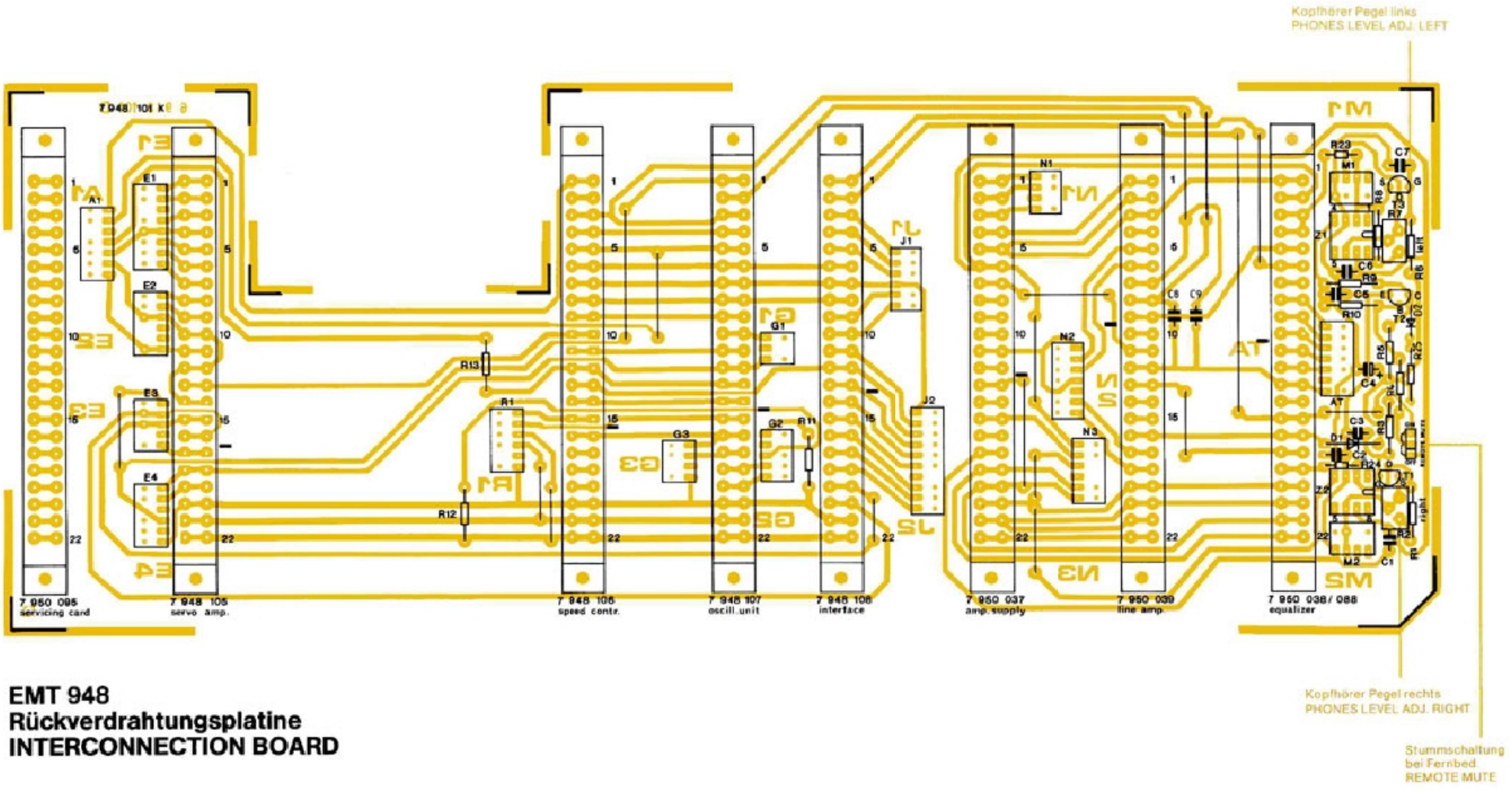

EMT 948
Rückverdrahtungsplatine
INTERCONNECTION BOARD

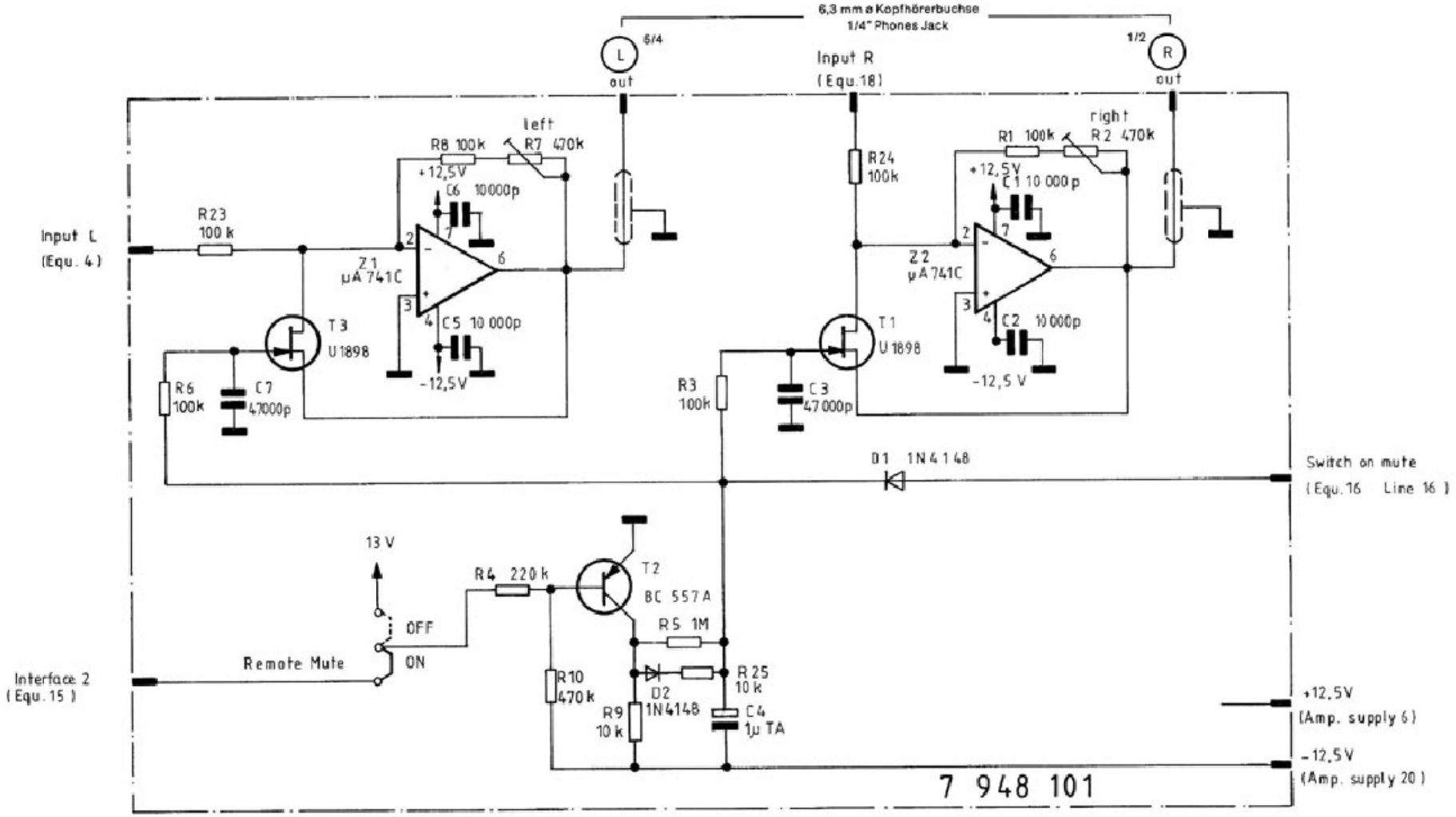

Hilfsmonitorstufe auf Rückverdrahtungsplatine
AUXILIARY MONITOR ON CONNECTOR PRINT BOARD

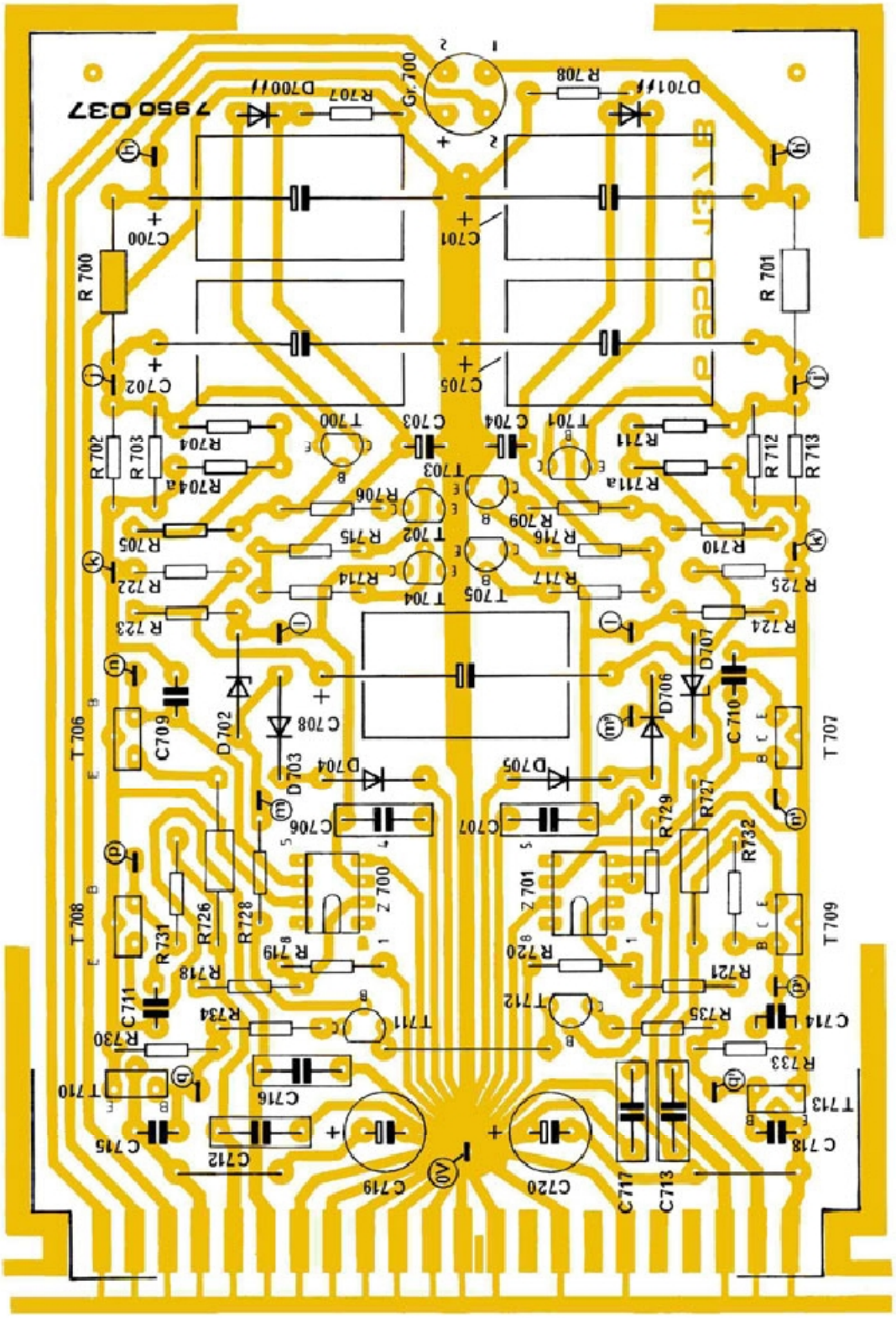

EMT 948
Verstärker-Stromversorgung
AMPLIFIER SUPPLY

Rectifier with Filter Circuit

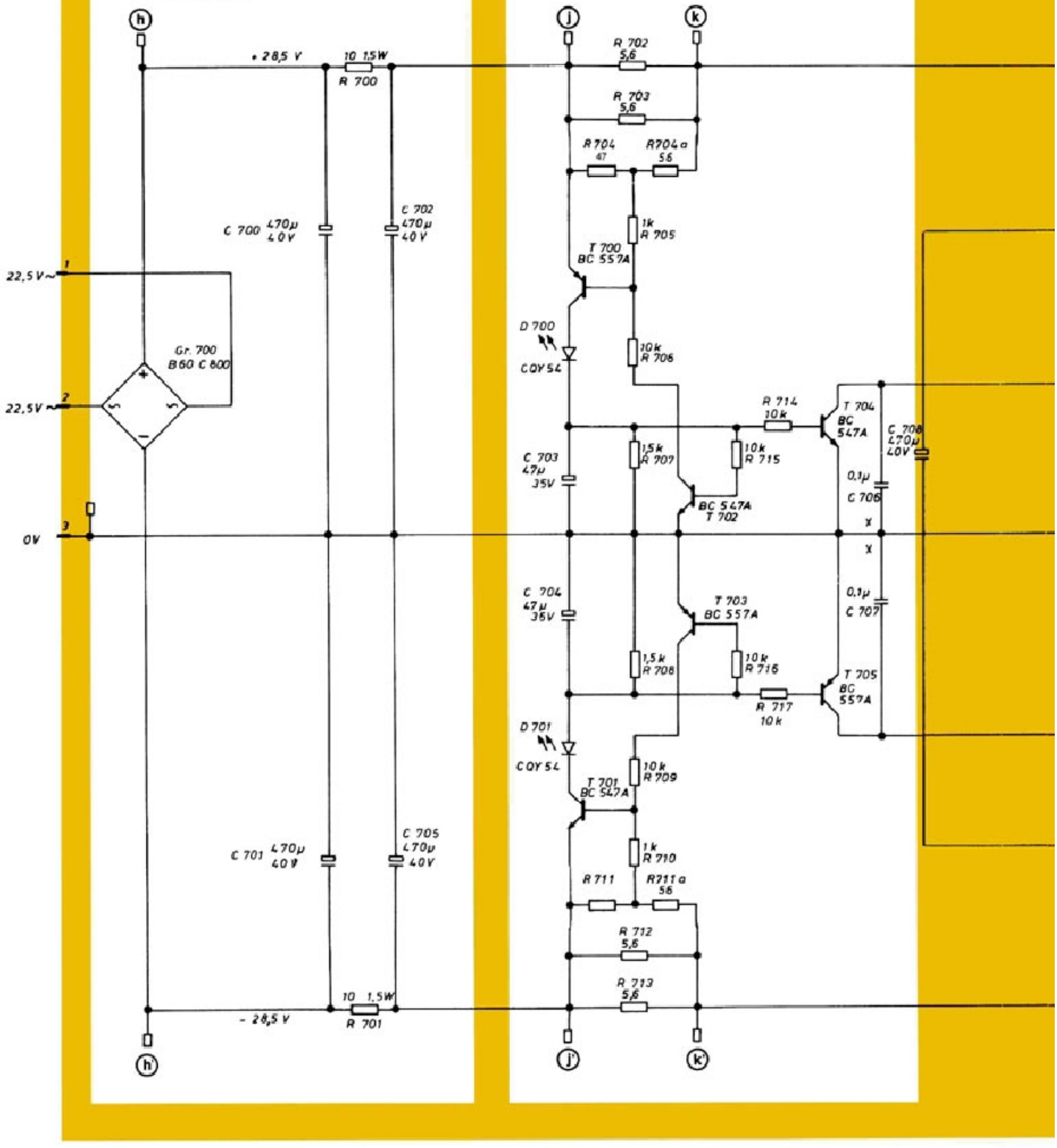

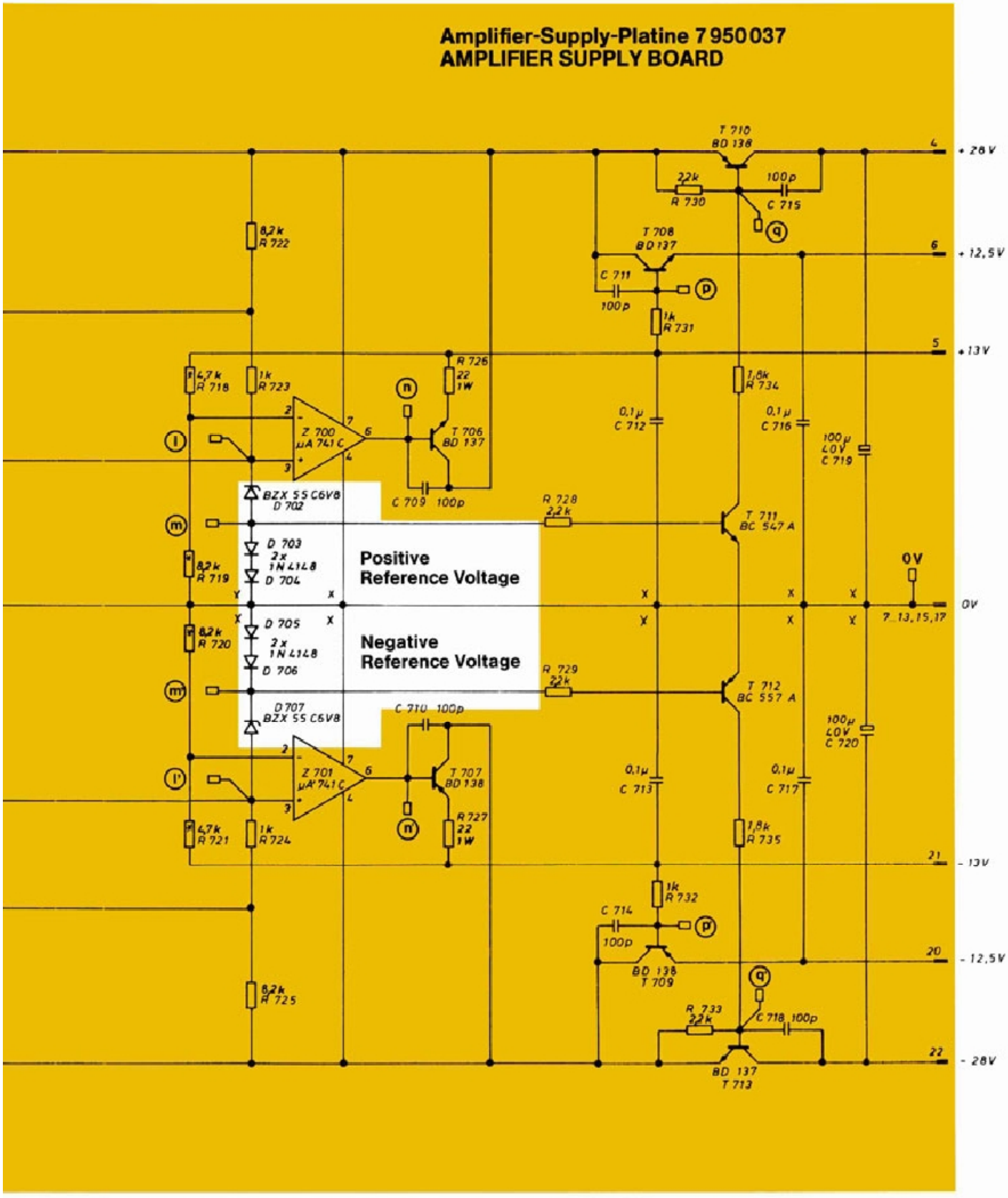
Amplifier-Supply-Platine 7950037
AMPLIFIER SUPPLY BOARD
Positive
Reference Voltage
Negative
Reference Voltage
T 710
BD 138
+ 28V
22k
R 730
100p
C 715
T 708
BD 137
+ 12,5V
C 711
100p
1k
R 731
+ 13V
8,2k
R 722
4,7k
R 718
1k
R 723
R 726
22
1W
T 706
BD 137
Z 700
µA 741 C
C 709 100p
BZX 55 C6V8
D 702
D 703
2x
1N 4148
D 704
8,2k
R 719
D 705
2x
1N 4148
D 706
8,2k
R 720
D 707
BZX 55 C6V8
C 710 100p
Z 701
µA 741 C
T 707
BD 138
R 727
22
1W
4,7k
R 721
1k
R 724
8,2k
R 725
R 728
2,2k
T 711
BC 547 A
R 729
22k
T 712
BC 557 A
1,8k
R 734
0,1µ
C 712
0,1µ
C 716
100µ
40V
C 719
0V
7_13_15_17
0V
0,1µ
C 713
0,1µ
C 717
100µ
40V
C 720
1,8k
R 735
- 13V
1k
R 732
C 714
100p
BD 138
T 709
- 12,5V
R 733
22k
C 718 100p
BD 137
T 713
- 28V

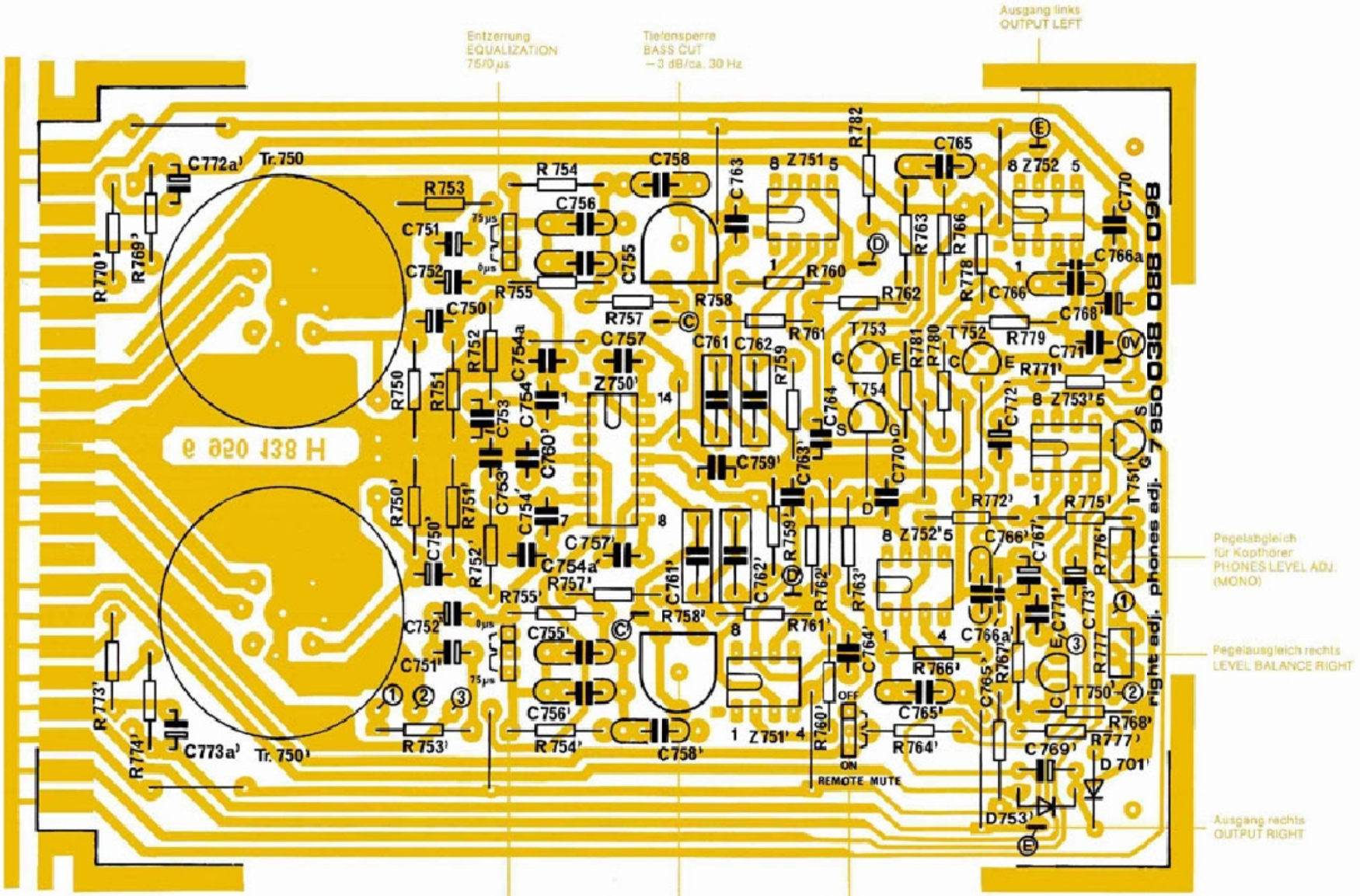

EMT 948
Entzerrer-Verstärker
EQUALIZER

Entzerrerverstärker
EQUALIZER AMPLIFIER

7 950 038
with input transformer (4 150 056), for EMT T-cartridges

7 950 088
without input transformer, for magnetic pickups (**68 kOhm)

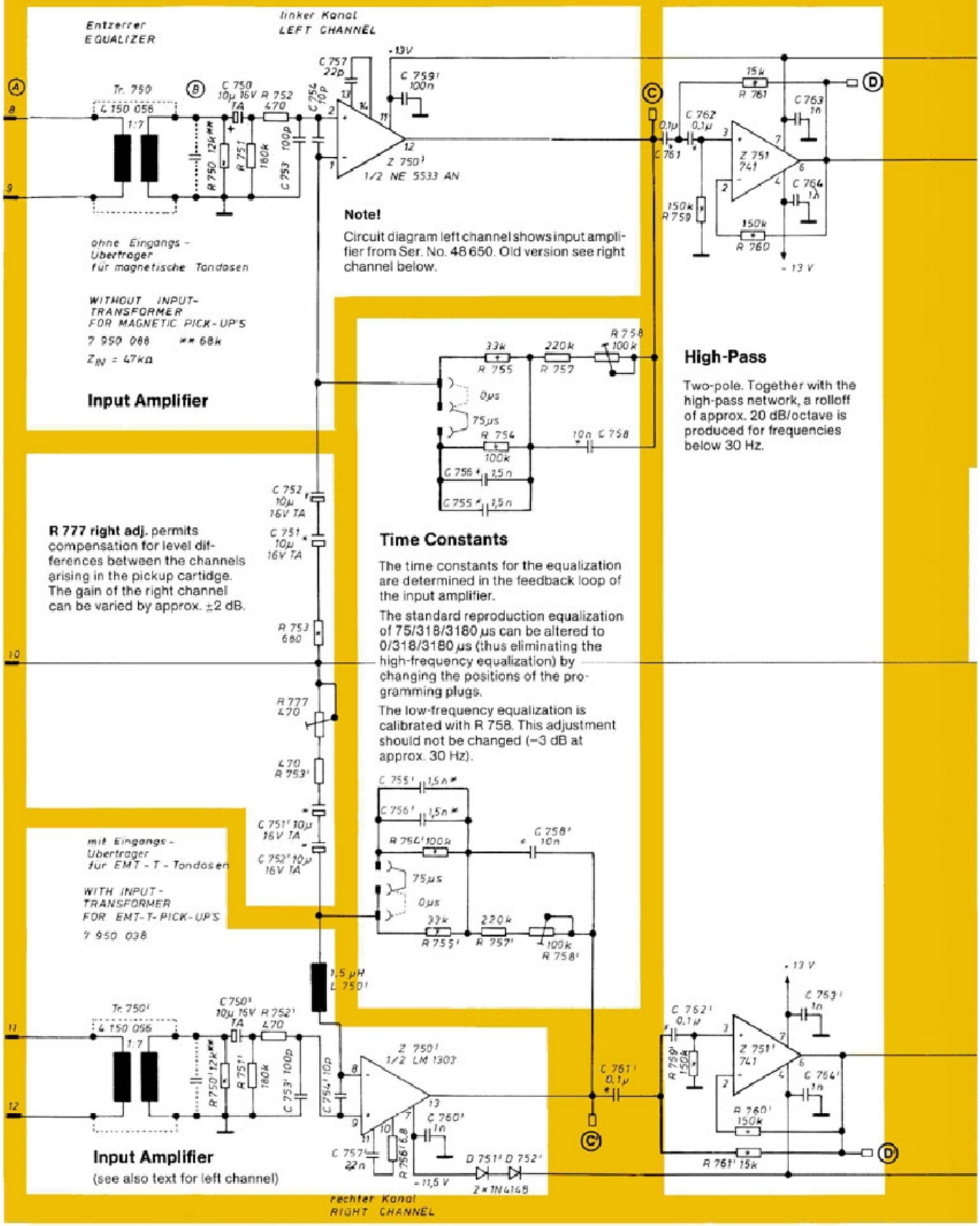

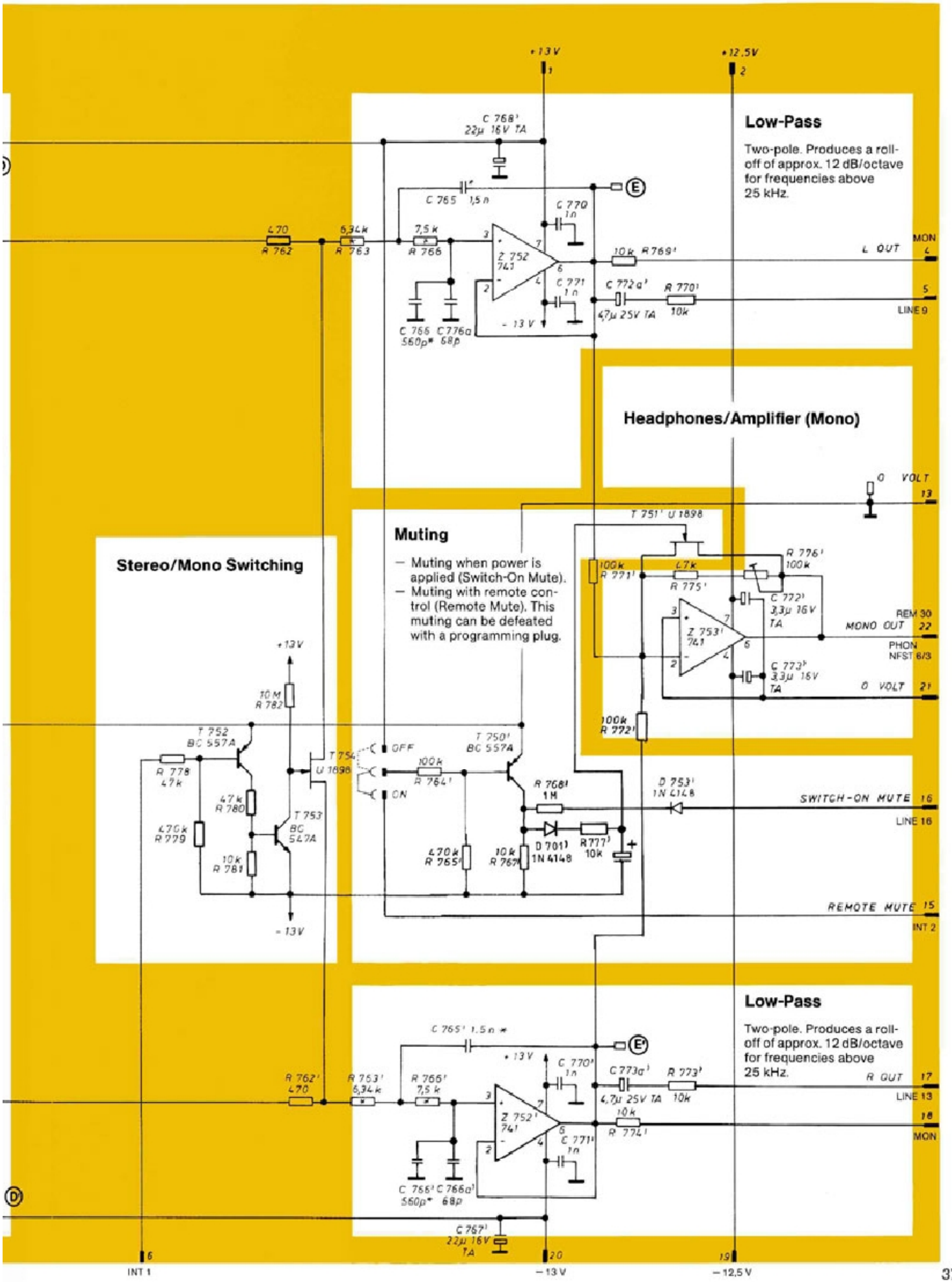
+13V
+12,5V
Low-Pass
Two-pole. Produces a roll-off of approx. 12 dB/octave for frequencies above 25 kHz.
L OUT
MON
LINE 9
Headphones/Amplifier (Mono)
0 VOLT
Muting
– Muting when power is applied (Switch-On Mute).
– Muting with remote control (Remote Mute). This muting can be defeated with a programming plug.
Stereo/Mono Switching
MONO OUT
PHON
REM 30
SWITCH-ON MUTE
LINE 16
REMOTE MUTE
INT 2
OFF
ON
R OUT
LINE 13
MON
INT 1
–13V
–12,5V

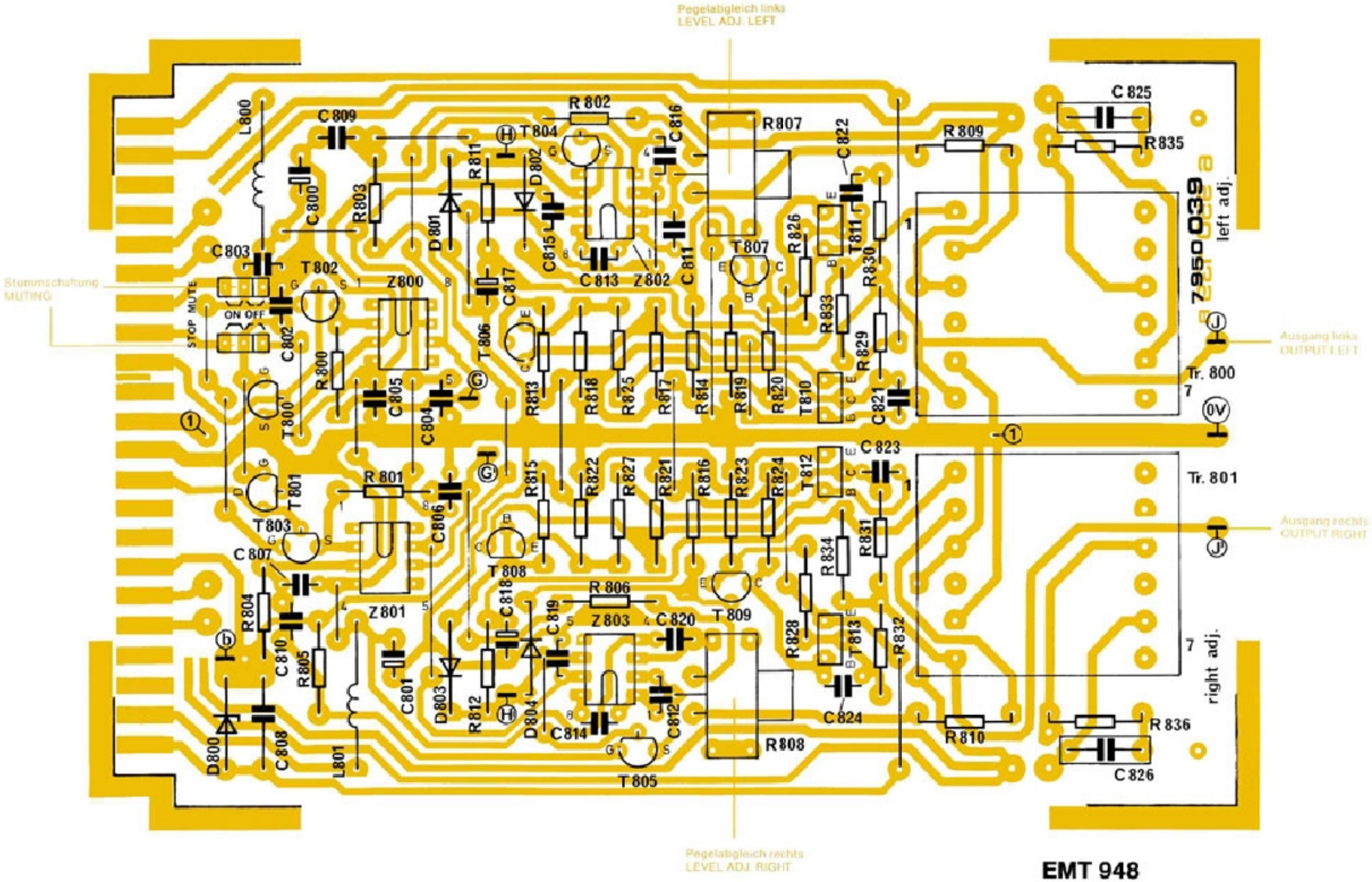

EMT 948
Leitungsverstärker
LINE AMPLIFIER

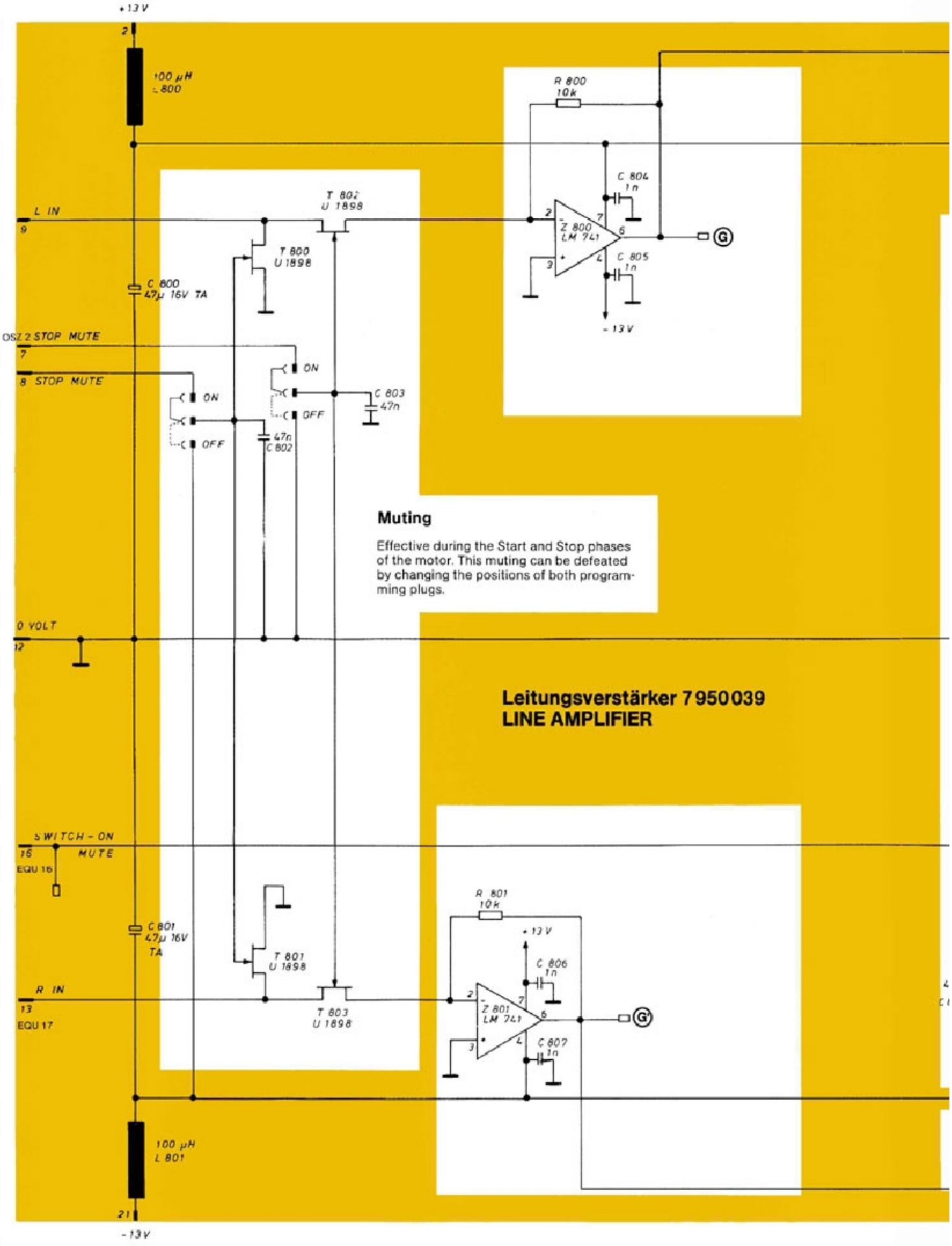

Muting

Effective during the Start and Stop phases of the motor. This muting can be defeated by changing the positions of both programming plugs.

Leitungsverstärker 7950039
LINE AMPLIFIER

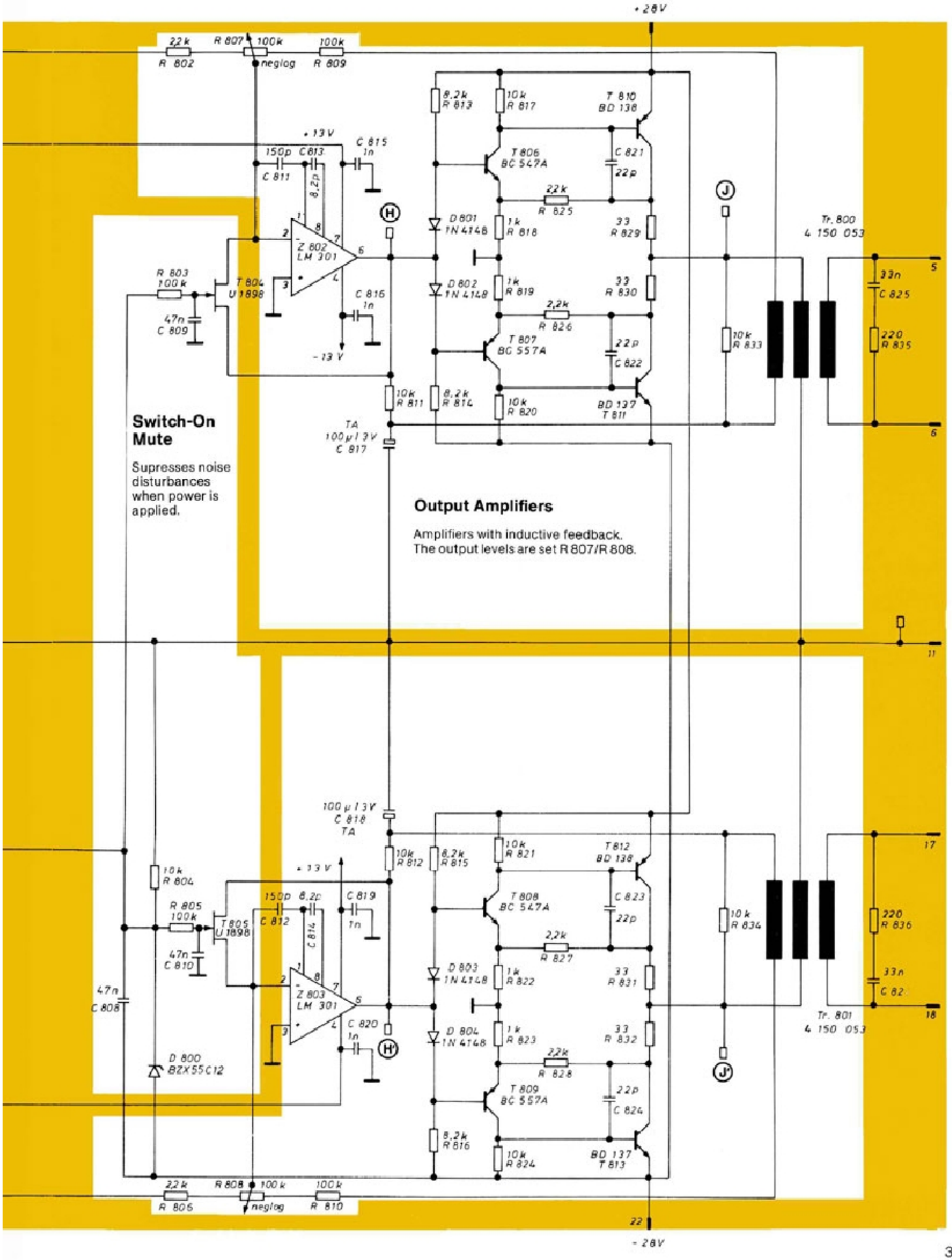
+ 28 V
2,2 k R 802
R 807 100k neglog
100k R 809
8,2k R 813
10k R 817
T 810 BD 138
+ 13 V
C 815 1n
150p C 813
C 811
8,2p
T 806 BC 547A
C 821 22p
2,2k R 825
D 801 1N 4148
1k R 818
33 R 829
Z 802 LM 301
R 803 100k
T 804 U 1898
C 816 1n
47n C 809
D 802 1N 4148
1k R 819
33 R 830
2,2k R 826
T 807 BC 557A
22p C 822
- 13 V
10k R 811
8,2k R 814
10k R 820
BD 137 T 811
TA 100µ/ 3V C 817
Switch-On Mute
Supresses noise disturbances when power is applied.
Output Amplifiers
Amplifiers with inductive feedback.
The output levels are set R 807/R 808.
Tr. 800 4 150 053
33n C 825
220 R 835
10k R 833
100µ/ 3V C 818 TA
10k R 812
8,2k R 815
10k R 821
T 812 BD 138
10k R 804
R 805 100k
T 805 U 1898
150p C 812
8,2p C 814
C 819 1n
47n C 810
47n C 808
Z 803 LM 301
C 820 1n
D 800 BZX 55 C 12
T 808 BC 547A
C 823 22p
2,2k R 827
D 803 1N 4148
1k R 822
33 R 831
D 804 1N 4148
1k R 823
33 R 832
2,2k R 828
T 809 BC 557A
22p C 824
8,2k R 816
10k R 824
BD 137 T 813
10 k R 834
220 R 836
33n C 82
Tr. 801 4 150 053
2,2k R 805
R 808 100 k neglog
100k R 810
- 28 V

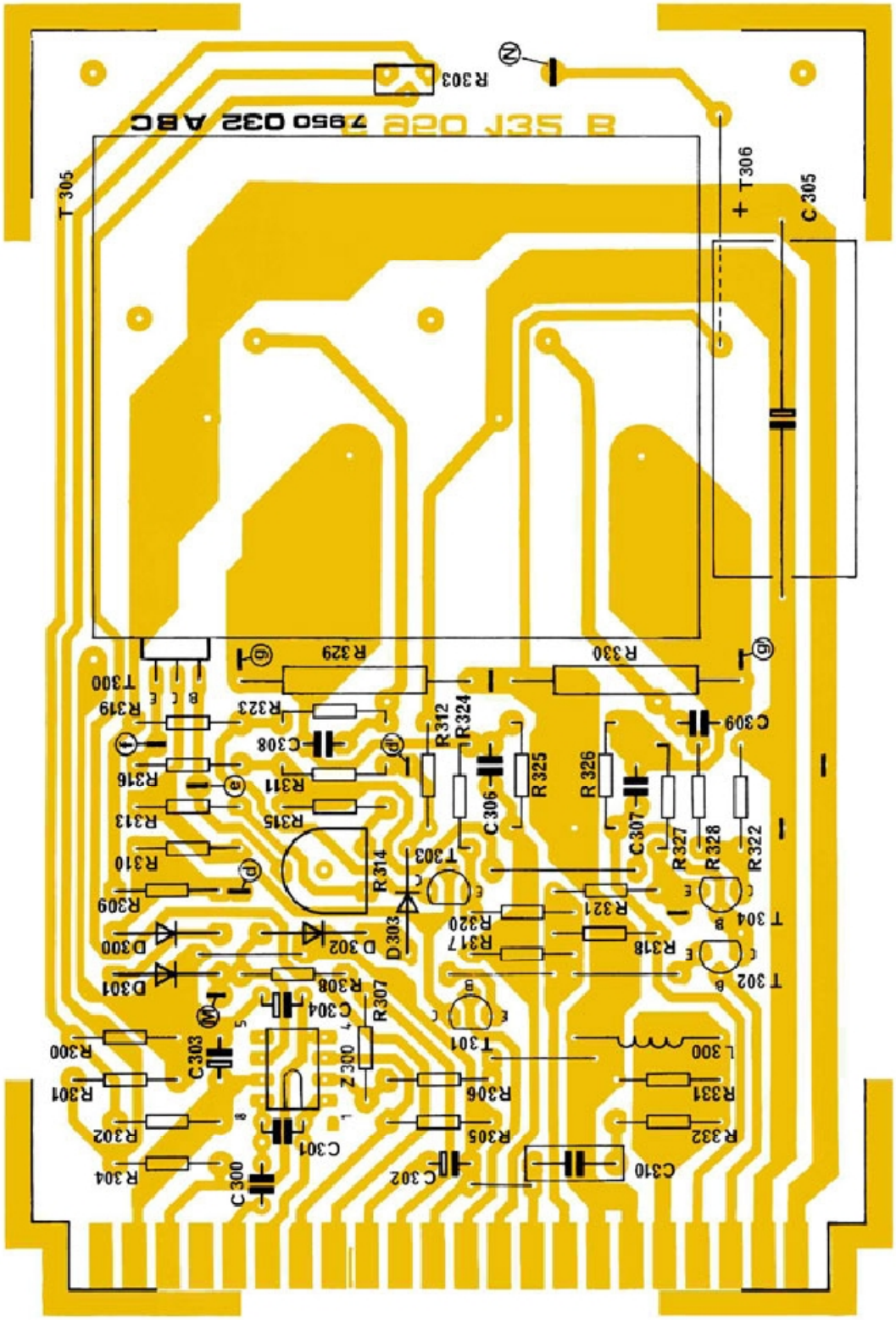

EMT 948
Cue-Verstärker
CUE AMPLIFIER

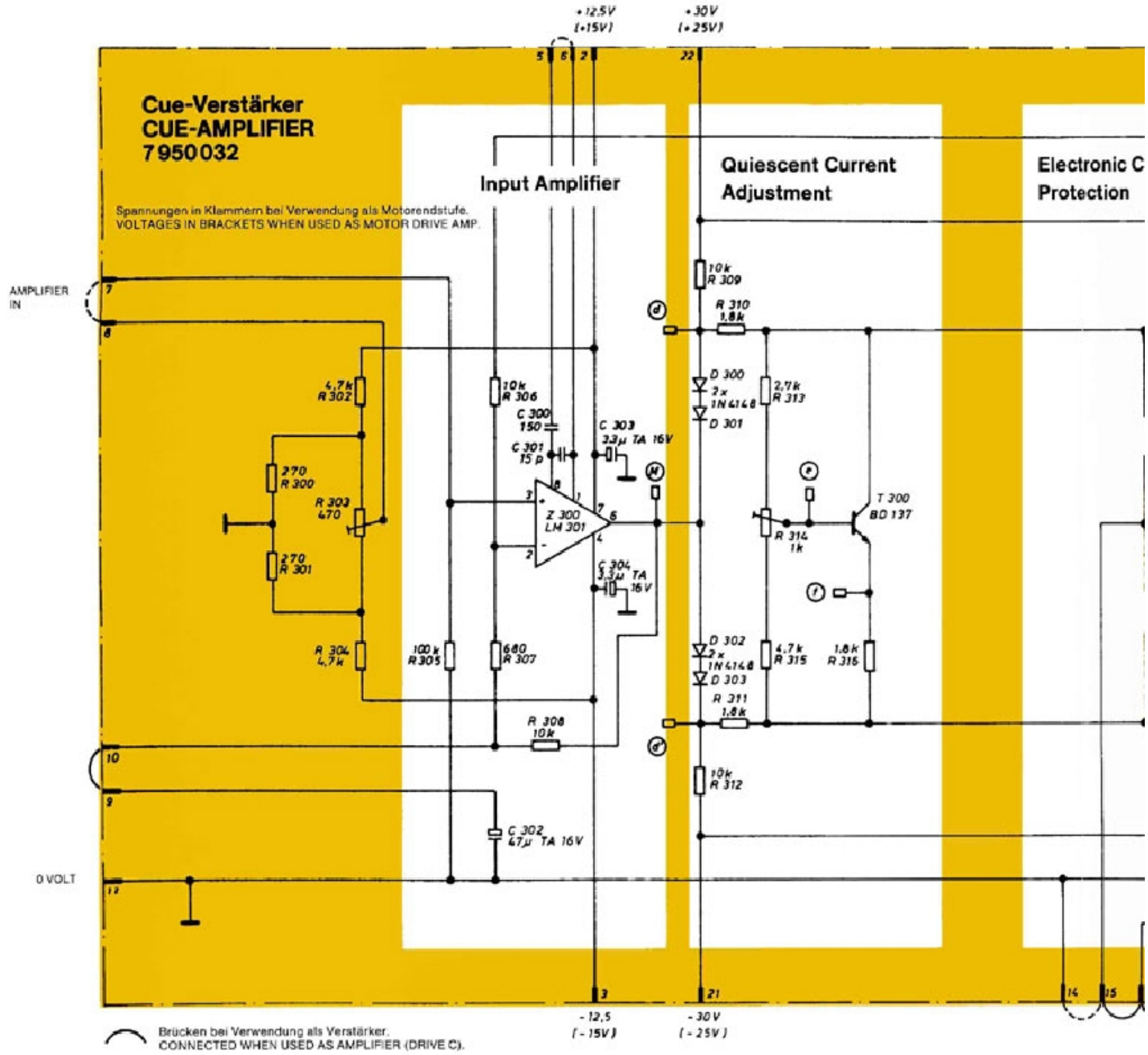

R 314 Adjust

- Short the input to 0 V.
- Adjust R 314 to a voltage drop of approx. 20 mV over R 329 and R 330. (between test pin g and g')

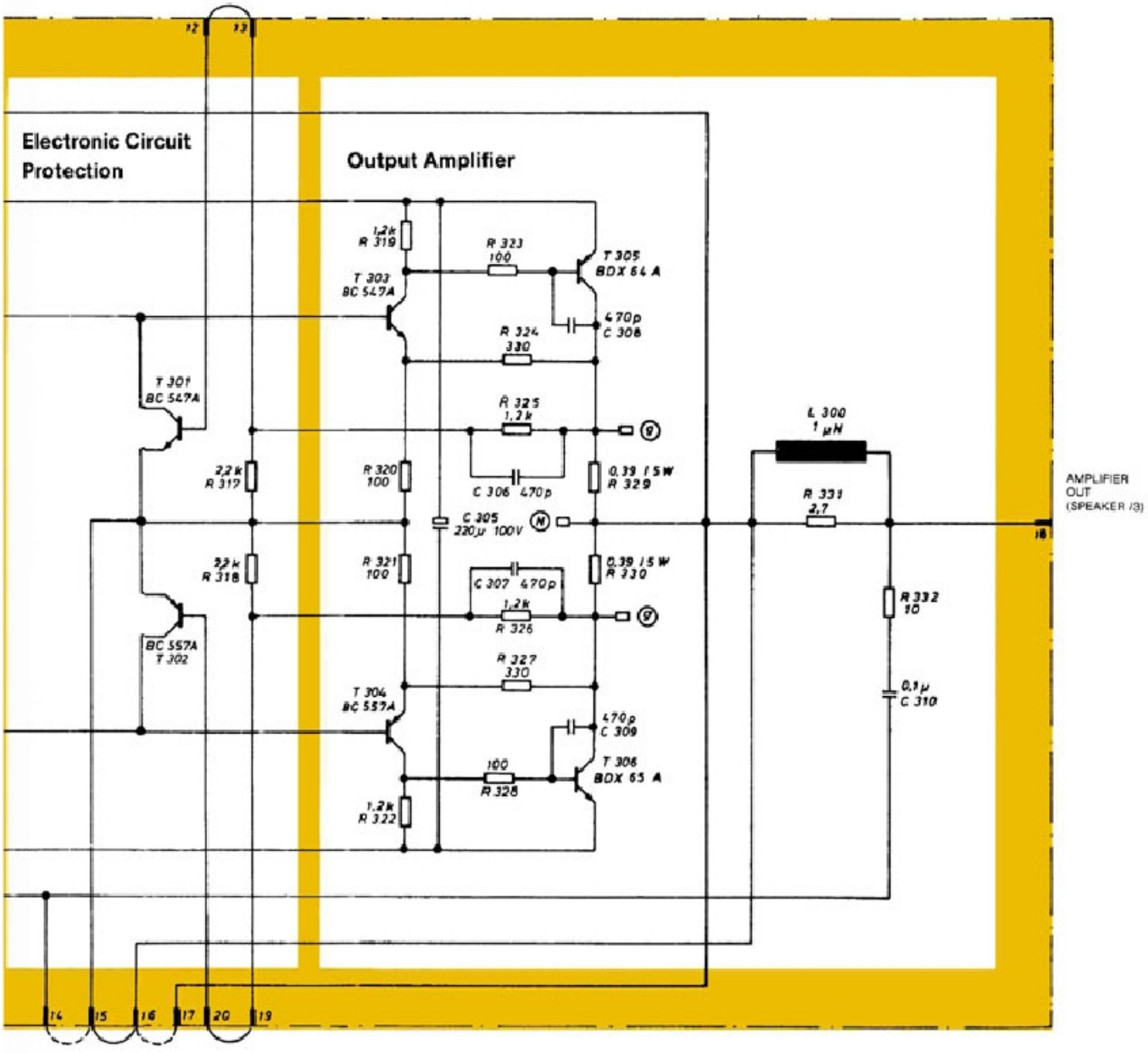
Electronic Circuit Protection
Output Amplifier
12
13
1,2k R 319
R 323 100
T 305 BDX 64 A
T 303 BC 547A
470p C 308
R 324 330
T 301 BC 547A
R 325 1,2k
L 300 1 µH
2,2k R 317
R 320 100
C 306 470p
0,33 1,5W R 329
C 305 220µ 100V
R 331 2,7
AMPLIFIER OUT (SPEAKER /3)
18
3,3k R 318
R 321 100
C 307 470p
0,33 1,5W R 330
1,2k R 326
R 332 10
BC 557A T 302
R 327 330
T 304 BC 557A
470p C 309
0,1µ C 310
100 R 328
T 306 BDX 65 A
1,2k R 322
14
15
16
17
20
19

Service

Mechanical Adjustments

The Broadcast Turntable is simple to adjust mechanically.

1. If a replacement motor or tone arm mounting board is installed, a distance of 230 mm must be set between the motor spindle and the tone arm shaft. This adjustment may be made most readily with reference to the distance of 215.45 mm shown in the diagram.

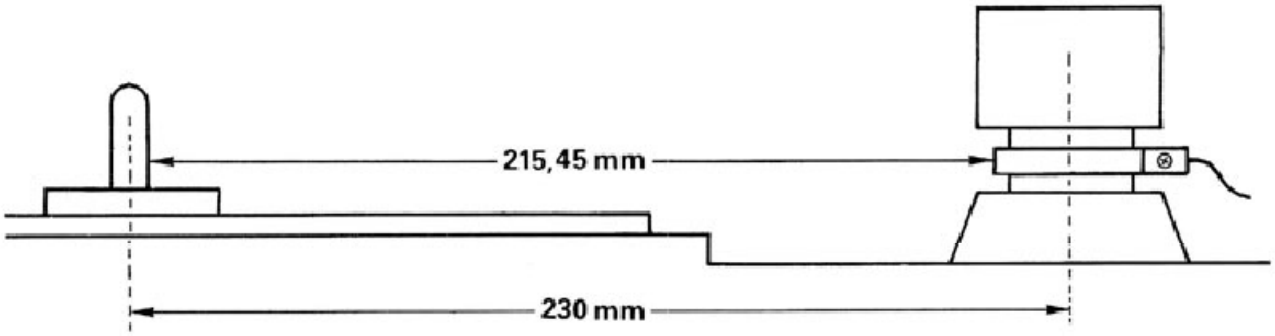

2. BRAKE

The brake is mounted underneath the turntable platter. It is adjusted so that a "parallel" separation of approx. 0.3 - 0.5 mm is present between the brake shoe and the rotor of the motor when the turntable is running. If necessary, the brake is to be readjusted as follows:

- Unscrew screws "A" and remove the brake.
- Adjust nut "M" to achieve a brake travel of approx. 2 mm, that is, the shaft of the brake should exhibit a free play of approx. 2 mm.
- Align the brake shoe at Philips screws "B" along the metal edge lying underneath.
- Align the entire brake assembly to achieve a "parallel" separation of approx. 0.3 - 0.5 mm between the brake shoe and the rotor of the motor when the mains power is turned off. Tighten screws "A".

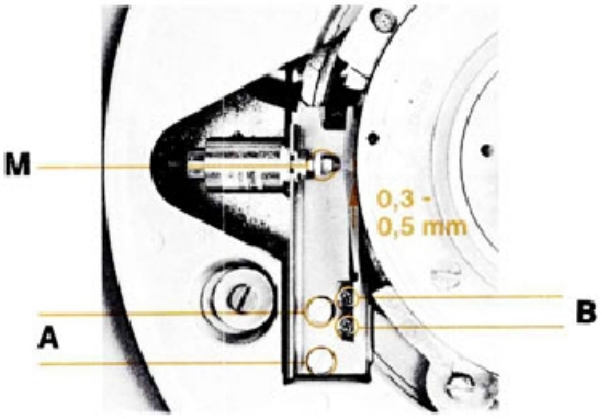

3. MOTOR

The controlled DC motor employs Hall generator communication.

The diagram illustrates the principle of construction. The rotor shaft extending through the unit is guided by a sintered bearing. The rounded end of the rotor shaft turns on a bearing disk made of Nylatron.

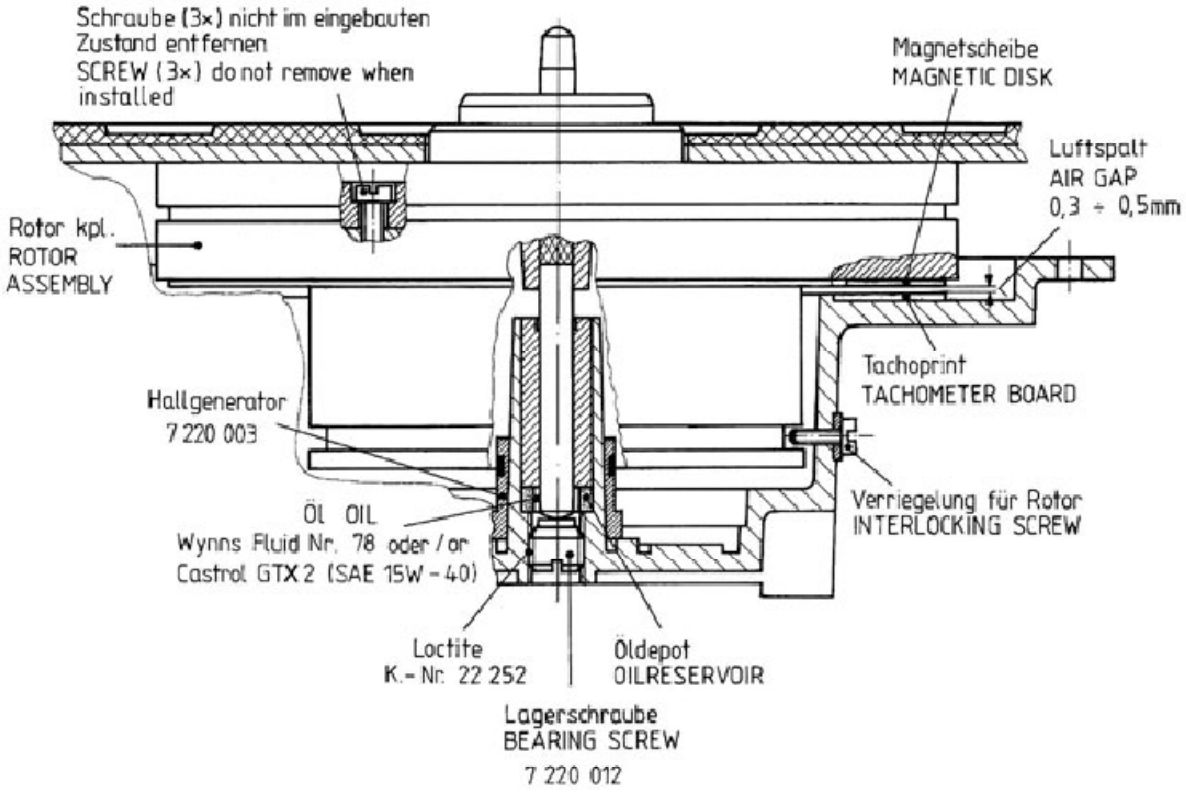

The running height of the rotor is adjusted at the factory with the lower bearing screw (7 220 012), resulting in an air gap of 0.3 to 0.5 mm between the magnetic disk secured to the rotor and the stationary board containing the tachometer coil.

In this manner, a corresponding voltage level is obtained at the amplifier output of 12 to 13 V_{pp} at 33-1/3 rpm.

The position of this bearing screw (secured with Loctite) should normally NOT be changed.

The rotor of the motor is protected from falling out by a screw on the stator housing, situated externally next to the motor number.

When the motor or shaft is to be inspected, only this one screw (sealed with green paint) should be loosened several turns. The complete rotor assembly may then be removed by pulling upwards.

CAUTION! Because of the strong magnetic forces present, exercise extreme care during removal and replacement.

The three M4 screws in the upper part of the rotor must therefore not be loosened. They are employed for screwing the heavy magnet unit to the rotor plate.

Loosening the screws presents the danger of destroying the Hall generator elements located below.

The bearing of the motor is permanently lubricated with special oil (15 drops):
WYNNS Fluid No. 78, or
CASTROL GTX 2 (SAE 15 W - 40)

Below the end of the sintered bearing, an oil reservoir is located that has no direct contact with the rotor shaft.

The elements of the Hall generators (7 220 003) exhibit an ohmic resistance of between 30 and 50 Ohms (approx.), depending on the position of the rotor.

Testing may be conducted, for example, at the soldering terminals of the connection board directly below the motor (between the current conductors H 4/H 1 or H 4/H 6, respectively, and the remaining voltage conductors).

The complete Hall generator element may be replaced, if necessary, as follows:

- Unsolder the eight connections leading to the center of the motor from below. (Do not unscrew the connection board.)
- Remove the rotor completely (after loosening the interlocking screw, as described above).
- Push in a new element precisely to the stop and solder the connections on the circuit board.
- Reassemble the motor.
- Readjust the motor amplifier as described in the instruction manual.

Technical Data — EMT 948

Deck

Turntable diameter	33 cm
Turntable speeds	33-1/3 rpm 45 rpm 78 rpm
Deviation of turntable speed	max. 0.1 % (quartz controlled)
Speed variation with VCO operation	±25 %
Run-up time at $T_{amb.}$ = 20 °C Quick start Test at TP 6 from f/u-converter "Tacho"	max. 200 ms
Wow and flutter at 33-1/3 rpm	
measured with EMT 424 weighted in accordance with DIN 45507	max. ±0.075 %
Rumble	
measured according to DIN 45539 with test record DIN 45544	
min. unweighted min. weighted	50 dB 70 dB
Mains Voltage	
50 or 60 Hz	100, 110, 120, 220, 230, 240 V (+5, –10 %)
Power consumption	max. approx. 85 VA normal approx. 40 VA
Operating temperature	+10 . . . +60 °C
Relative humidity	20 . . . 90 % RH, non-condensing
Dimensions	460 mm (18.3") 475 mm (18.9") 235 mm (9.4")
Depth below mounting surface	157 mm (6.2")
Weight	26 kg (58 lbs)

Tone Arm

EMT 929 Tone Arm for EMT "T" series pickup cartridges.

Tracking force	adjustable 0-50 mN (0-5 g)
Antiskating device	compensating weight
Bearing friction	
horizontal and vertical	max. 5×10^{-4} N(50 mg)
Tone arm lift, motor driven	
raising and lowering time adjustable	approx. 0.2 s
Empty headshell	for mounting standard magnetic pickup cartridges

Subject to change without notice.

Pick-up cartridges

"T" series (stereo and mono)

Type	TSD 15	TMD 25	TND 65
Application	Stereo Stereo grooves	Mono Microgrooves	Mono Standard grooves
Stylus	Diamond Super Fineline shape	Diamond conical	Diamond conical
Tip radius	6 µm	25 µm	65 µm
Tracking force	20 - 30 mN	20 - 30 mN	20 - 30 mN
Output level at 1 kHz (for 1 cm/s rms recorded velocity	0.21 mV ±2 dB	0.21 mV ±2 dB	0.21 mV ±2 dB
Frequency range	20 Hz - 30 kHz	20 Hz - 20 kHz	20 Hz - 20 kHz
Frequency response 40 Hz - 12.5 kHz	±2 dB	±2 dB	±2 dB
Difference in output level between channels 40 Hz - 12.5 kHz	max. 2 dB	-	-
Crosstalk at 1 kHz	min. 25 dB	-	-
Frequency intermodulation (FIM)	max. 0.5 %	max. 1 %	max. 1 %
Vertical tracking angle	18° (±3°)	18° (±3)	18° (±3°)
DC resistance	2 x 24 ohms	24 ohms	24 ohms
Compliance	15 µm/mN	15 µm/mN	15 µm/mN
Equivalent mass at stylus tip	approx. 1 mg	approx. 1 mg	approx. 1 mg

The above data were obtained using the following test records:

Frequency response and crosstalk test record DIN 45 543

Distortion test record DIN 45 542

Distortion measurements performed with test record DIN 45 542 referred to "reference level - 6 dB" ≙ full modulation (peak velocity 8 cm/s at 1 kHz)

Note: The stylus assemblies are not user replaceable.

Subject to change without notice.

Amplifiers

Plug-in boards	
Equalization	
DIN, NAB, IEC	75/318/3180 µs
FLAT	0/318/3180 µs, selected with programming plug
Frequency response	40 Hz to 15 kHz ±0.5 dB 30 Hz approx. −3 dB below 30 Hz approx. 20 dB/octave rolloff above 25 kHz approx. 12 dB/octave rolloff
Input voltage	
for EMT "T" cartridges	0.3 to 1.4 mV (with 1:7 input transformer)
for magnetic cartridges (R_i = 47 kohms)	2 to 10 mV
Overload margin of the input	20 dB
Maximum output level before clipping	10 V (+ 22 dB)
Output voltage	adjustable between 700 mV and 10 V (0 to + 22 dB) on 200 ohms
Harmonic distortion	max. 0.1 % between 30 Hz and 12 kHz at 4:4 V (+ 15 dB) on 200 ohms
Crosstalk supression	min. 55 dB, 30 Hz to 15 kHz
RMS S/N ratio, unweighted	min. 75 dB
Peak S/N ratio, weighted (CCIR 468-2)	min. 67 dB
Headphone output, mono	unbalanced, adjustable
Headphone output, stereo	unbalanced, adjustable
on a load of 200 ohms	approx. 200 to 600 mV
on a load of 2 kohms	approx. 500 to 1500 mV
Mono switching	operable by remote control

Subject to change without notice.

EMT 948 Information for Ordering

Types	Quantity	Order No.	Name
	1	9 948 110/...	Turntable deck, complete, with EMT 929 Tone Arm, Equalizer Amplifier, without pickup cartridge
	1	9 948 120/...	Turntable deck, complete, with EMT 929 Tone Arm, TSD-G Pickup Shell, and 47 kohms equalizer amplifier, for magnetic pickup cartridges
		/...	**Please indicate desired mains voltage.**

Additional versions

9 948 . . .

- 1 Cue amplifier with level control, 6.3 mm stereo phone jack on control panel
- 1 Equalizer amplifier for TSD Pickup Cartridges
- 2 47 kohms equalizer amplifier with TSD-G empty pickup shell for mounting magnetic cartridges
- 5 with additional cartridge illumination
- 6 with additional, simplified transport lock (e.g., for mobile vans)
- 7 with additional cartridge illumination and transport lock

Parts List			
	1	9 935 006	Empty EMT Pickup Shell T-series with accessories for 9 948 120
	1	7 948 030	Dust cover assembly
	1	6 948 036	Turntable platter assembly

Accessories			
	1	4 203 154	Male plug, 6 pin (type A6M)
	1	4 203 234	Male plug, 36 pin (type Amphenol 57-30360)
	2	4 204 062	Female plug, 3 pin (type NC-3FX)
	1	4 240 579	Mains cable, german standard
	1	4 240 580	Mains cable, USA
	1	4 295 001	Allen key, 2 mm
	1	4 295 002	Allen key, 3 mm
	1	6 929 100	Tone arm height adjustment gauge
	1	7 948 100	Set of fuses and lamps:
	3	4 107 008	Incandescent lamp 18 V / 26 mA
	2	4 190 050	Fuse 1.0 AT / 250 V USA
	2	4 190 051	Fuse 0.5 AT / 250 V USA
	2	4 190 100	Fuse 0.5 AT / 250 V EUR
	2	4 190 103	Fuse 1.0 AT / 250 V EUR
	1	4 191 069	Fuce cap EUR
	1	4 191 070	Fuce cap USA
			(One fuse and one fuse cap installed as mains fuse).
	1	7 929 055	Antiscating weight, in bag
	1	6 929 016	Counterweight
	1	6 950 060	Stroboscope disk
	1	4 107 009	Lamp removal tool

Special Accessories

(to be ordered separately)			
	1	9 948 970	Console, operating height 800 mm, vertically adjustable feet ± 25 mm, with cover plate for mounting additional control elements or loudspeakers.
	1	9 948 971	Console, operating height 800 mm, vertically adjustable feet ± 25 mm, with cue amplifier and cue loudspeaker, cover plate for mounting additional control elements.
	1	948 910	Transport Trunk
	1	9 935 000	TSD 15 Stereo pickup cartridge with 6 µm Super Fineline Stylus.
	1	9 935 001	TMD 25 Mono pickup cartridge with 25 µm diamond stylus for microgroove records.
	1	9 935 002	TND 65 Mono pickup cartridge with 65 µm diamond stylus for 78 rpm standard records.

Recommended Spare Parts EMT 948

The numbers quoted are intended for 5 years' operation. Fractions indicate that we recommend only one spare part where several turntables are operated together. Example: 1/3 = 1 spare part for 3 machines.

Recommended Quantity	Order No.	Name
2	4 107 005	Cold cathode lamp
3	4 107 008	Incandescent lamp, 18 V / 26 mA
2	4 190 050	Fuse, 1 A slow-blow, 250 V USA
2	4 190 051	Fuse, 0.5 A slow-blow, 250 V USA
2	4 190 100	Fuse, 0.5 A slow-blow, 250 V EUR
2	4 190 103	Fuse, 1 A slow-blow, 250 V EUR
1/3	9 220 000	Motor assembly, complete
1	7 950 010	Lift motor, complete
2	6 832 070	Drive belt for tone arm lift
1/5	9 929 005	Tone arm
1/5	7 950 038	Stereo equalizer amplifier for TSD cartridges
1/5	7 950 088	Stereo equalizer amplifier, 47 kohms
1/5	7 950 039	Line amplifier
1/5	7 948 105	Servo amplifier board
1/5	7 948 106	Speed control board
1/5	7 948 107	Oscillator board
1/5	7 948 108	Interface board
1/5	7 950 037	Amplifier power supply
1/5	7 948 110	Power supply board
1/5	7 948 030	Dust cover, complete

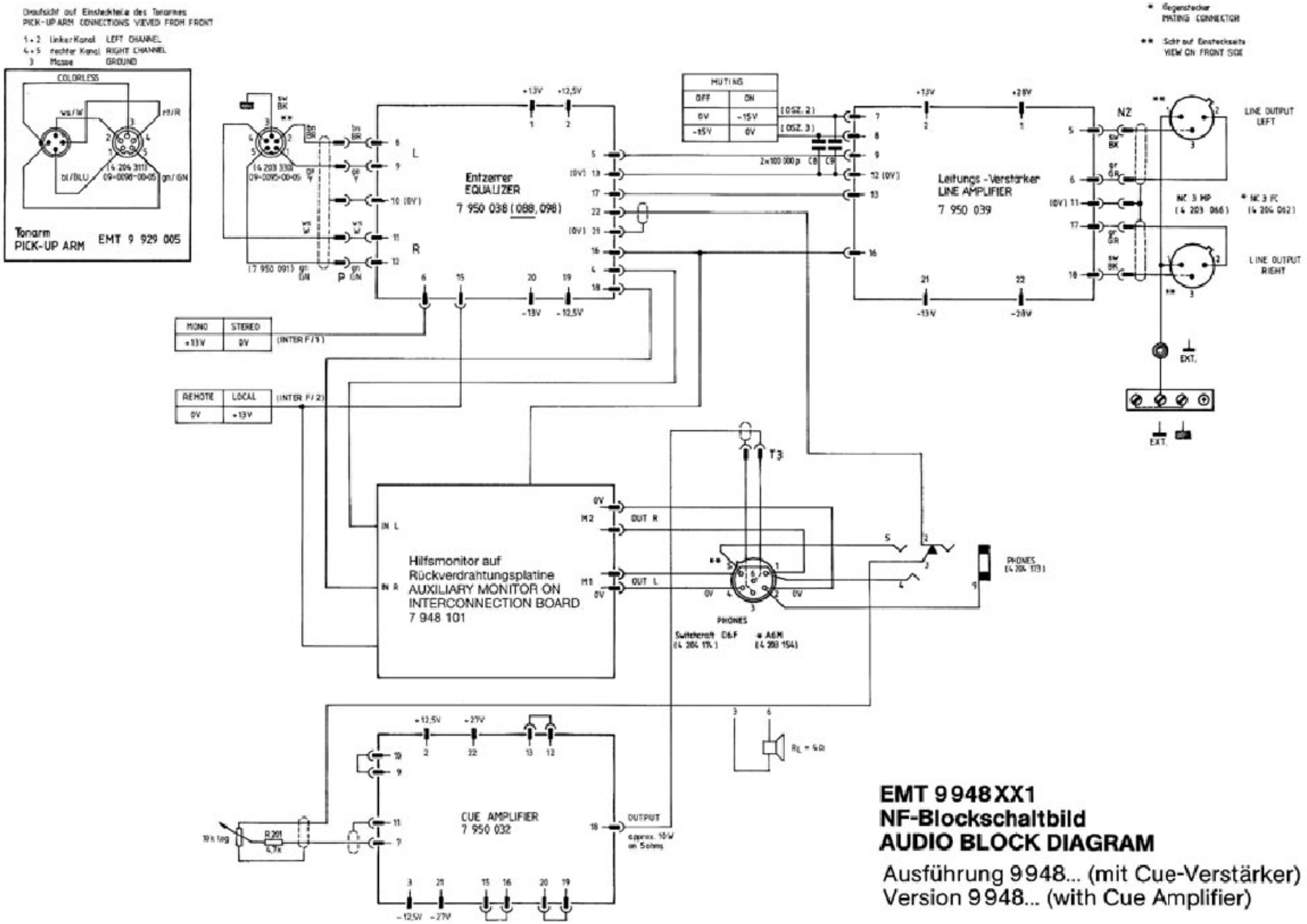

EMT 9948 XX1
NF-Blockschaltbild
AUDIO BLOCK DIAGRAM

Ausführung 9948... (mit Cue-Verstärker)
Version 9948... (with Cue Amplifier)

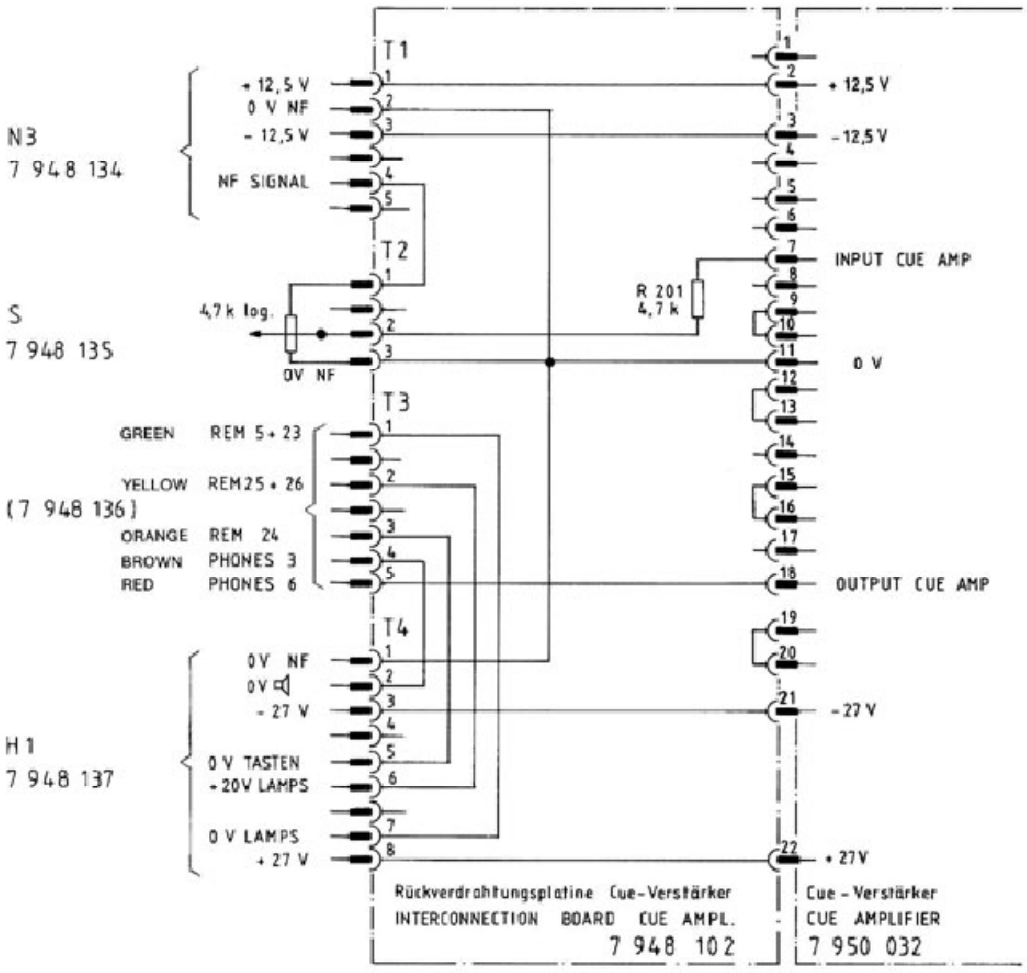

Rückverdrahtungsplatine
Option Cue-Verstärker

INTERCONNECTION BOARD
OPTION CUE AMPLIFIER

X 948 901

Ersatzteilliste/Replacement Parts EMT 948

BEST.-NR. ORDER NO.	BEZEICHNUNG	DESIGNATION
4 107 005	Kaltlichtlampe	Cold-cathode lamp
4 107 008	Glühlampe 18 V / 26 mA	Pilot lamp 18 V / 26 mA
4 190 050	Sicherung 1 AT/250 V USA	Fuse 1 AT/250 V USA
4 190 051	Sicherung 0,5 AT/250 V USA	Fuse 0.5 AT/250 V USA
4 190 005	Sicherung 0,5 AT/250 V EUR	Fuse 0.5 AT/250 V EUR
4 190 103	Sicherung 1 AT/250 V EUR	Fuse 1 AT/250 V EUR
7 948 150	Netzschalter, komplett	Power switch, complete
4 182 118	Drehschalter 644	Rotary switch 644
4 184 166	Leuchtdrucktaste (99-458.837) („ohne Druckkappe")	Illuminated pushbutton (99-458.837) (without button cap)
7 948 951	Drucktaste START/STOP, komplett	START/STOP pushbutton, complete
7 948 952	Drucktaste LIFT, komplett	LIFT pushbutton, complete
7 948 953	Drucktaste REVERSE, komplett	REVERSE pushbutton, complete
7 948 026	Bremse, komplett	Brake, complete
7 948 028	Bremsbacke, komplett	Brake shoe, complete
7 948 039	Federelement (Chassisaufhängung)	Spring element (chassis suspension)
7 948 025	Netztrafo	Mains transformer
4 163 023	Gleichr./S FB 1003	Rectifier/S FB 1003
4 133 391	Elko 10.000 µF/40 V	Elco 10.000 µF/40 V
4 163 012	Gleichr./Si. B 60 C 800	Rectifier/Si. B 60 C 800
9 220 000	Motoraggregat, komplett	Motor assembly, complete
7 950 010	Lift, komplett	Lift motor, complete
7 948 408	Auflagebank, komplett	Pick-up arm support, complete
6 832 070	Antriebsriemen f. Tonarmlift	Drive belt f. tone arm lift
9 929 007	Tonarm stereo/mono, komplett	Tone arm stereo/mono, complete
7 950 038	Entzerrer-Verst. stereo f. TSD	Equalizer amplifier stereo
7 950 088	Entzerrer-Verst. stereo 47 kOhm	Stereo equalizer ampl. 47 kohms
7 950 039	Leitungsverstärker-Platine	Line amplifier
7 948 105	Endstufen-Platine (Motor)	Servo amplifier board (motor)
7 948 106	Regel-Platine	Speed control board
7 948 107	Oszillator-Platine	Oscillator board
7 948 108	Interface-Platine	Interface board
7 950 037	Verstärker Stromversorgung	Amplifier power supply
7 948 110	Netzteil-Platine	Power supply board
7 220 025	Tachoverstärker	Tachometer amplifier
7 948 209	Tastenfeld-Platine	Push button board
7 938 054	SYNC-LED-Platine	SYNC LED board
7 948 035	Bedienleiste, mont.	Operating panel
7 948 036	Plattenteller, komplett	Turntable platter, complete
6 948 165	Gummiteller	Rubber mat
7 948 030	Abdeckhaube, komplett	Dust cover, complete
7 948 017	Lampenabdeckung, komplett	Lamp cover, complete
4 101 248	Diode 1 N 4006	Diode 1 N 4006
4 101 165	Diode 1 N 4001	Diode 1 N 4001
4 101 230	Diode 1 N 4148	Diode 1 N 4148
4 101 303	Z-Diode BZX 55/C12	Z-Diode BZX 55/C12
4 101 513	Z-Diode BZX 97/C2V7	Z-Diode BZX 97/C2V7
4 101 301	Z-Diode BZX 55/C6V8	Z-Diode BZX 55/C6V8
4 104 003	LED CQY 54-1	LED CQY 54-1
4 104 006	LED 5082 - 4950 grün	LED 5082 - 4950 green
4 101 253	Transistor BD 137	Transistor BD 137
4 101 254	Transistor BD 138	Transistor BD 138
4 101 324	Transistor BC 547 A	Transistor BC 547 A
4 101 326	Transistor BC 557 A	Transistor BC 557 A
4 101 458	Transistor BD 203	Transistor BD 203
4 101 459	Transistor BD 204	Transistor BD 204
4 101 293	FET U 1898	FET U 1898
4 101 313	FET P 1087 E	FET P 1087 E
4 101 460	Transistor BD 677	Transistor BD 677

Ersatzteilliste/Replacement Parts EMT 948

4 101 461	Transistor BC 517	Transistor BC 517
4 101 453	IC/TO-220/MC 78 M 20 CT	IC/TO-220/MC 78 M 20 CT
4 104 006	LED 5082-4950 grün	LED 5082-4950 green
4 101 446	IC LM 324	IC LM 324
4 101 454	IC/TO-220/MC 78 M 15 CT	IC/TO-220/MC 78 M 15 CT
4 101 455	IC/TO-220/MC 79 M 15 CT	IC/TO-220/MC 79 M 15 CT
4 101 235	IC µA 748 C	IC µA 748 C
4 101 456	IC LM 392 N	IC LM 392 N
4 101 465	IC CD 4046	IC CD 4046
4 101 466	IC CD 4066	IC CD 4066
4 101 471	IC CD 4528	IC CD 4528
4 101 474	IC CD 4093	IC CD 4093
4 101 457	IC LF 398 N (DIL)	IC LF 398 N (DIL)
4 101 236	IC µA 741 C	IC µA 741 C
4 101 417	IC 14011	IC 14011
4 101 430	IC NE 555 V	IC NE 555 V
4 101 462	IC/14 Anschl./CD 4013	IC/14 pin/CD 4013
4 101 463	IC CD 4040	IC CD 4040
4 101 464	IC/16 Anschl./CD 4049	IC/16 pin/CD 4049
4 101 466	IC CD 4066	IC CD 4066
4 101 470	IC CD 4522	IC CD 4522
4 101 467	IC CD 4071 BCP	IC CD 4071 BCP
4 101 468	IC CD 4073 BCP	IC CD 4073 BCP
4 101 469	IC CD 4081 BCP	IC CD 4081 BCP
4 101 259	IC LM 1458 CN	IC LM 1458 CN
4 101 331	IC LM 301 AN	IC LM 301 AN
4 101 532	IC NE 5533 AN	IC NE 5533 AN
4 102 045	Quarz 3,93216 MHz	Quartz, 3.93216 MHz
4 106 016	Kaltleiter 0,215 A/240 V	PTC resistor 0.215 A/240 V
4 107 009	Lampenzieher	Lamp removal tool

Achtung!

Bei Ersatzteilbestellungen und Angebotsanfragen bitte neben der genauen Bezeichnung der Teile auch Gerätetyp und Werk-Nr. angeben.

Durch Produktverbesserungen an Geräten der laufenden Serien und Änderungen bestimmter Industrieteile ist es unvermeidbar, daß manche Teile nicht voll kompatibel sind.

Notice!

When ordering replacement parts or requesting price quotations, please specify the unit model and serial number as well as the exact part designation.

Due to product improvements made during the course of a manufacturing series and to changes in particular industrial components, the incompatibility of some parts cannot be avoided.

BARCO-EMT
Professionelle Electronic
Ein Unternehmen der Gruppe BARCO n.v.

Postfach 200 · W-7634 Kippenheim · BRD · Telefon (07825) 1011 · Telex 754319 · Telefax (07825) 2285

Technical Information EMT 948 / EMT 950

Equalizer Amplifier

The equalizer amplifier consists of 3 printed circuit boards:

Amplifier supply board	7 950 037
Equalizer amplifier	7 950 038 / 088
Line amplifier	7 950 039

The version of the equalizer amplifier (038 or 088) depends on the pick up to be used:

7 950 038	to be used with MC pick ups
7 950 088	to be used with MM pick ups

7 950 038

This version is equipped with two input transformers 4 150 056 (1:7) to be used with MC pick ups (EMT T-series). R750 and R750' have a value of 12 kOhms.
To be used with pick ups of the EMT O-series, it is recommended, that the transformers are exchanged against 4 150 059 (1:1.3).
Modifying into version 7 950 088 means to replace the transformers with wire bridges and to exchange R750 and R750' against 68 kOhms.

7 950 088

This version has no transformers. It's input impedance is 47 kOhms. It is to be used with MM pick ups. R750 and R750' have a value of 68 kOhms.
Modifying into version 7 950 038 means to replace the wire bridges at the input with transformers 4 150 056 (for EMT T-series pick ups) or 4 150 059 (for EMT O-series pick ups) and to exchange R750 and R750' against 12 kOhms.

If one owns several equalizer amplifiers, there is nothing more to be done, than pull out the one, which is not needed and plug in the desired one. No electrical adjustment is necessary. But depending on the used pick up, one has still to adjust the tone arm balance.

H.-M. Fabritius
30.08.00