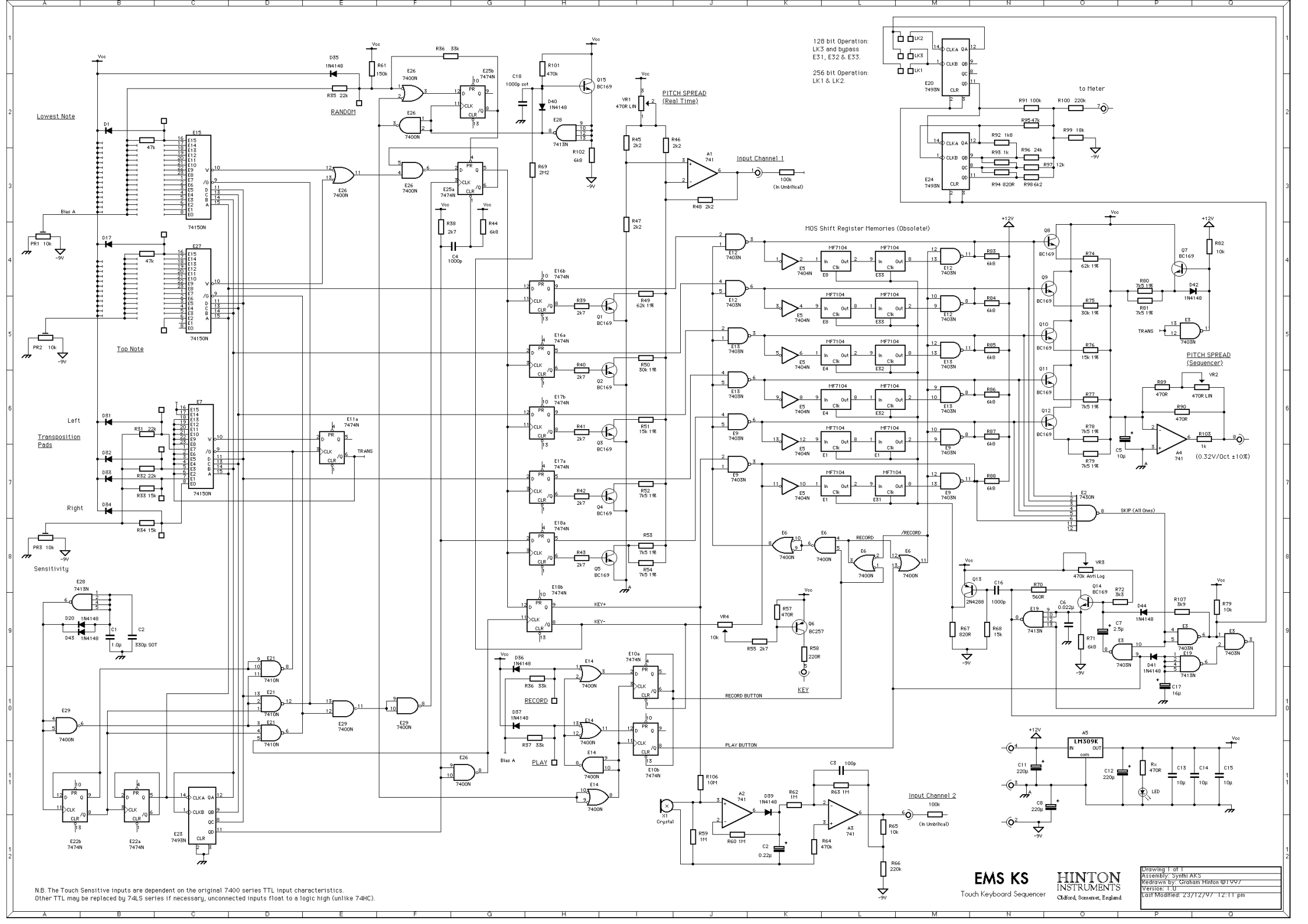


N.B. The Touch Sensitive inputs are dependent on the original 7400 series TTL input characteristics.
Other TTL may be replaced by 74LS series if necessary, unconnected inputs float to a logic high (unlike 74HC).

**EMS KS**
Touch Keyboard Sequencer

HINTON INSTRUMENTS
Oldford, Somerset, England

Drawing 1 of 1
Assembly: Synthi AKS
Redrawn by: Graham Hinton ©1997
Version: 1.0
Last Modified: 23/12/97 12:11 pm

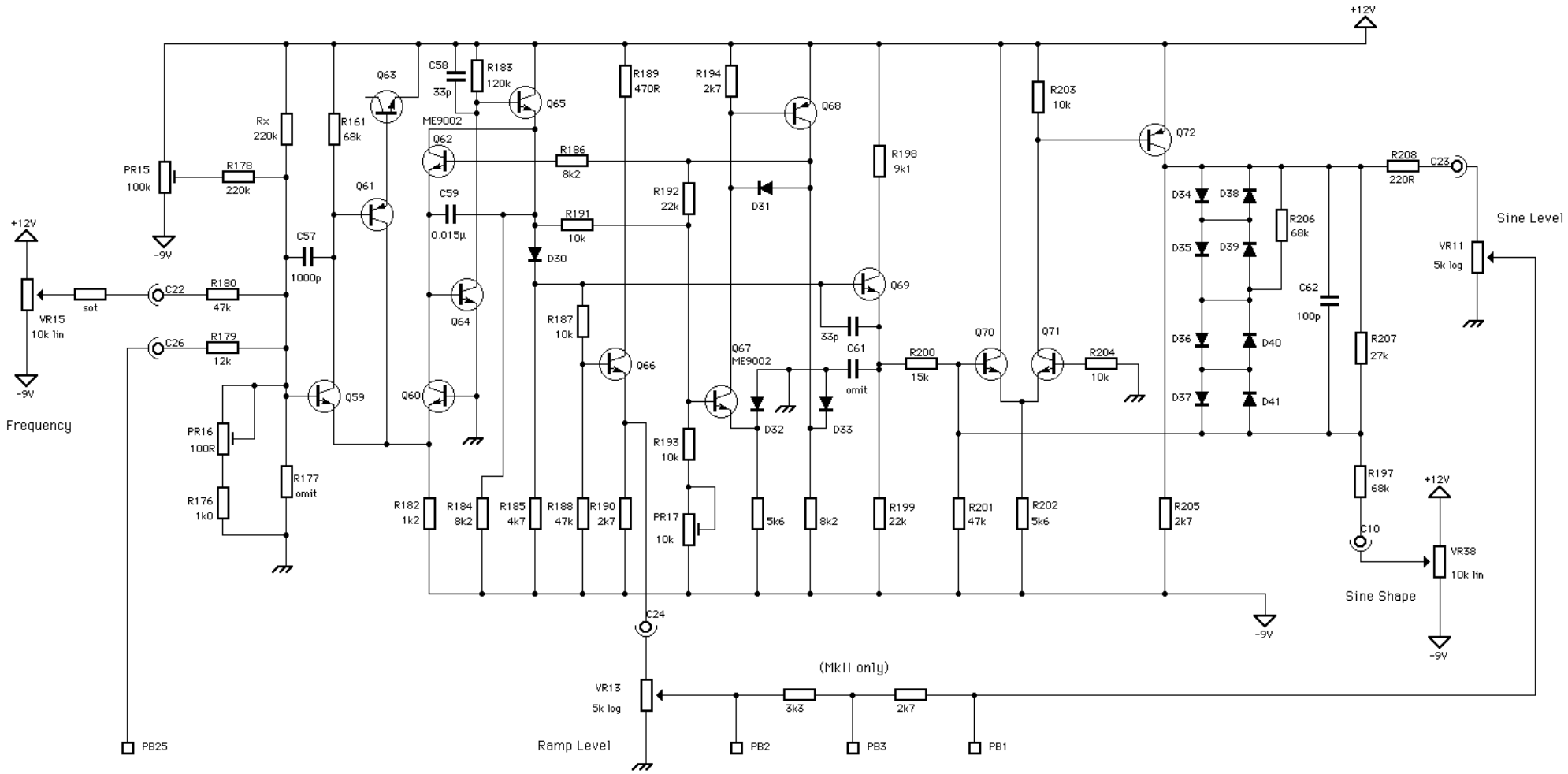


Notes:
VCS3 Mk I: all NPNs 2N5172, all PNPs 2N4288
VCS3 Mk II: all NPNs BC169C, all PNPs BC258B
All diodes 1N914, 1N4148, etc.
Replace Q59 + Q60 with LM194CH
Replace R176 with Q81 TC resistor
Replace R179 with 15k 1% or better if matrix true summing is fitted.

Adjust sine purity PR17 before calibrating frequency

# EMS VCS3

Oscillator 1 (Board C)

HINTON INSTRUMENTS
Oldford, Somerset, England

| |
|---|
| Drawing 1 of 6 |
| Assembly: VCS3 I & II, Synthi A |
| Redrawn by: Graham Hinton ©1996 |
| Version: 1974 |
| Last Modified: 1/07/96 2:20 pm |

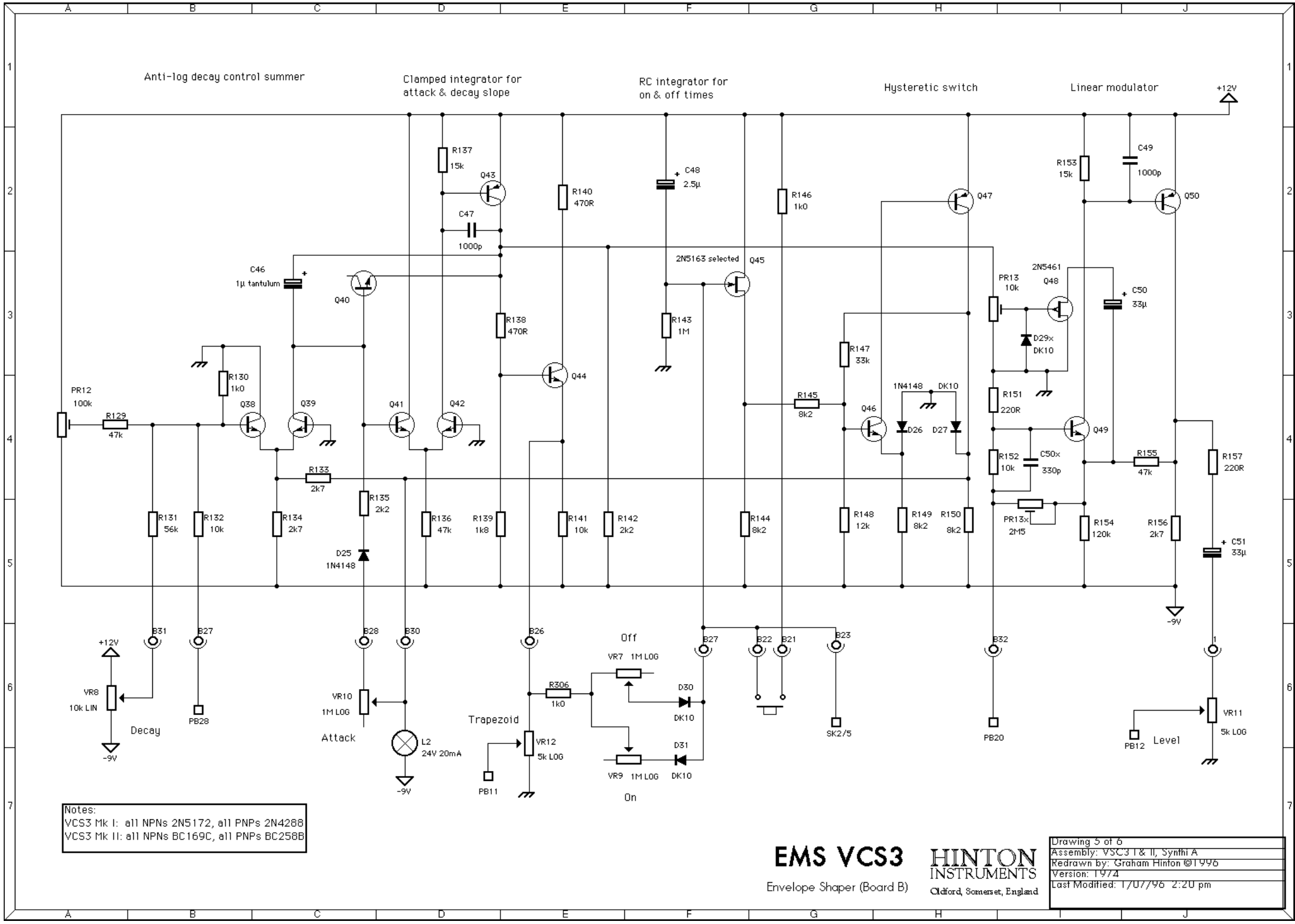


Notes:
VCS3 Mk I: all NPNs 2N5172, all PNPs 2N4288
VCS3 Mk II: all NPNs BC169C, all PNPs BC258B

# EMS VCS3

Envelope Shaper (Board B)

HINTON INSTRUMENTS
Oldford, Somerset, England

| |
|---|
| Drawing 5 of 6 |
| Assembly: VSC3 I & II, Synthi A |
| Redrawn by: Graham Hinton ©1996 |
| Version: 1974 |
| Last Modified: 1/07/96 2:20 pm |

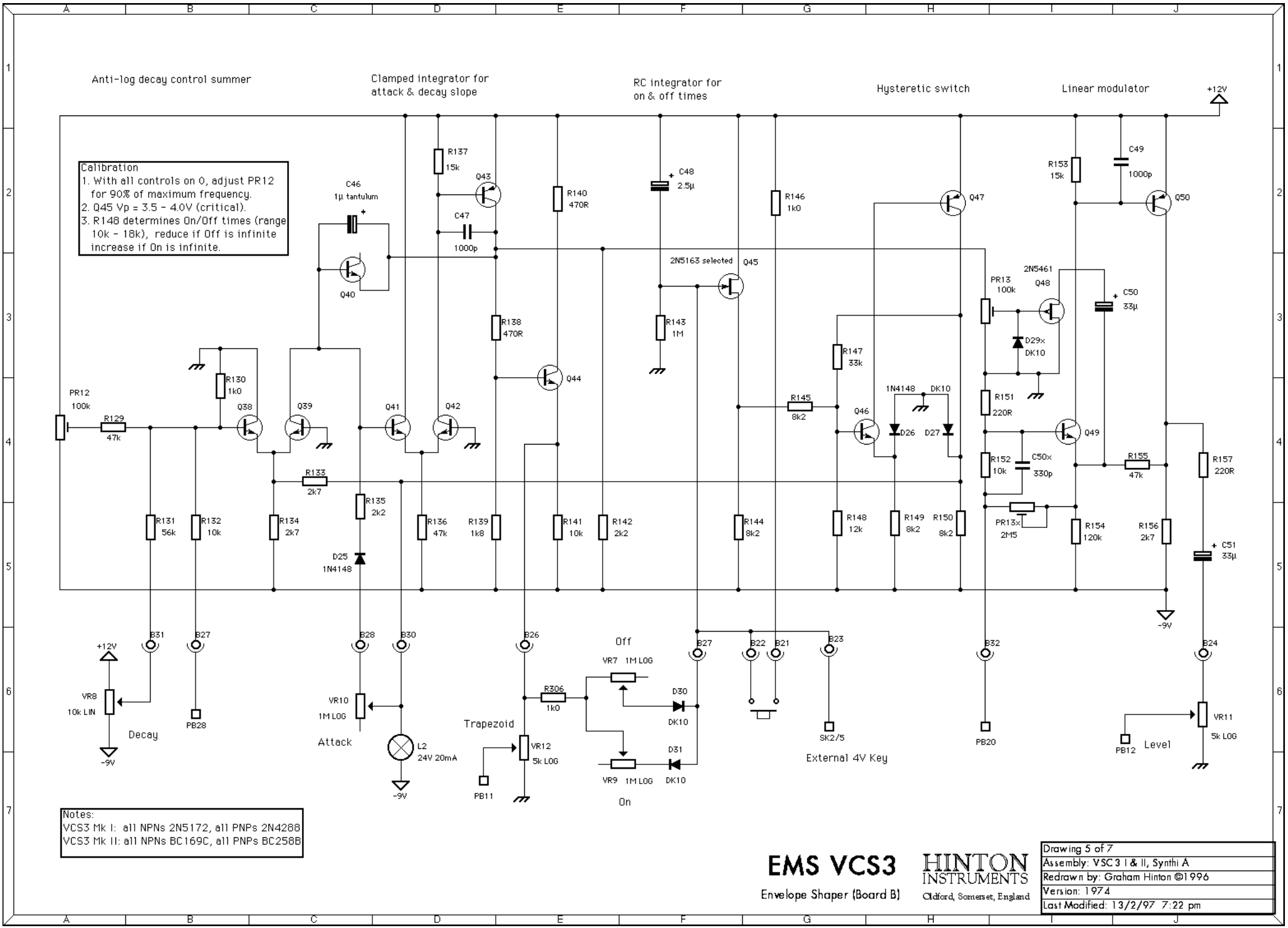


Notes:
VCS3 Mk I: all NPNs 2N5172, all PNPs 2N4288
VCS3 Mk II: all NPNs BC169C, all PNPs BC258B

# EMS VCS3

Envelope Shaper (Board B)

HINTON INSTRUMENTS
Oldford, Somerset, England

| |
|---|
| Drawing 5 of 7 |
| Assembly: VSC3 I & II, Synthi A |
| Redrawn by: Graham Hinton ©1996 |
| Version: 1974 |
| Last Modified: 13/2/97 7:22 pm |

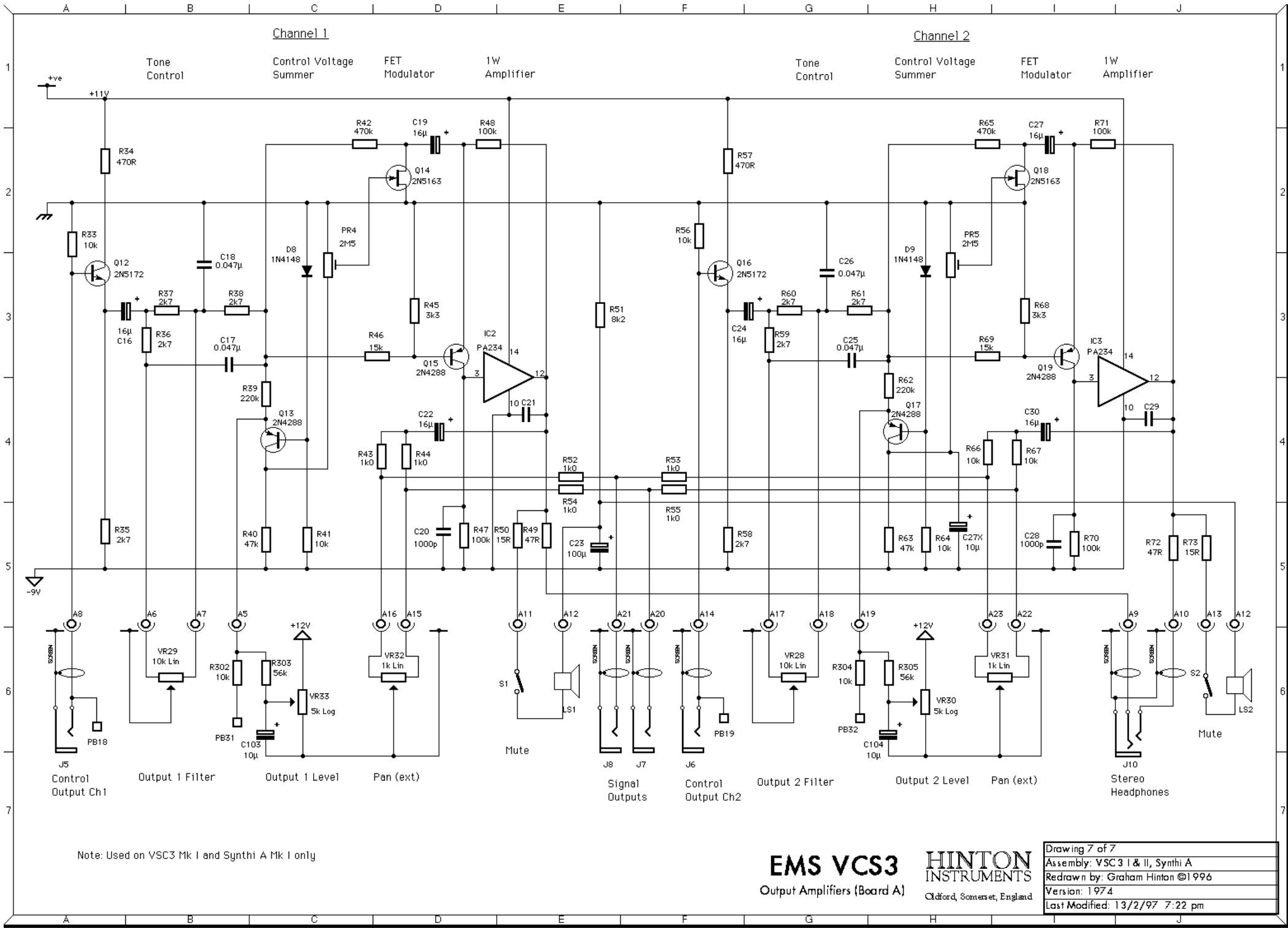


Note: Used on VSC3 Mk I and Synthi A Mk I only

# EMS VCS3

Output Amplifiers (Board A)

HINTON INSTRUMENTS

Oldford, Somerset, England

| |
|---|
| Drawing 7 of 7 |
| Assembly: VSC3 I & II, Synthi A |
| Redrawn by: Graham Hinton ©1996 |
| Version: 1974 |
| Last Modified: 13/2/97 7:22 pm |

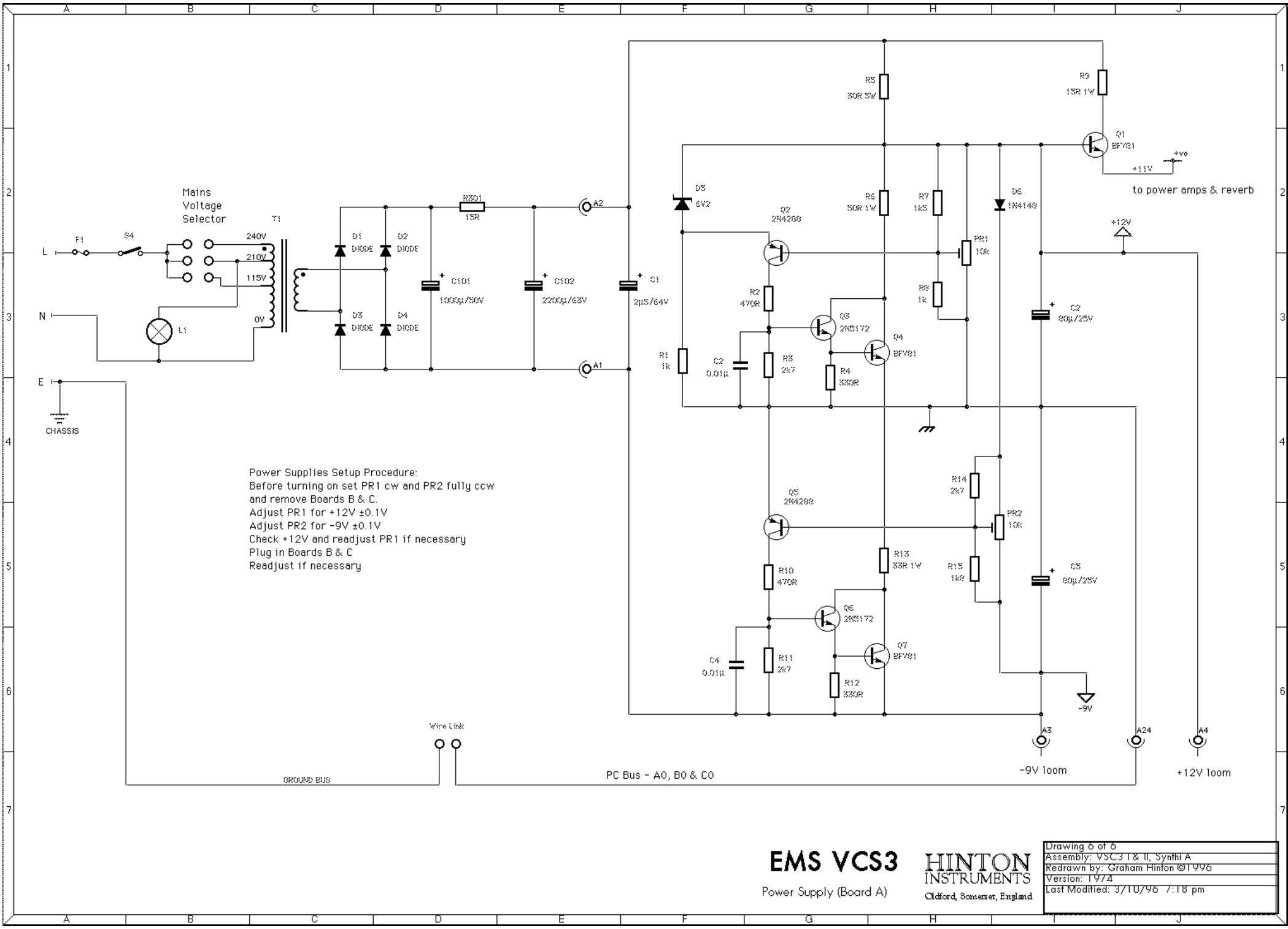


# EMS VCS3

Power Supply (Board A)

HINTON INSTRUMENTS
Clifford, Somerset, England

| |
|---|
| Drawing 6 of 6 |
| Assembly: VSC3 I & II, Synthi A |
| Redrawn by: Graham Hinton ©1996 |
| Version: 1974 |
| Last Modified: 3/10/96 7:18 pm |

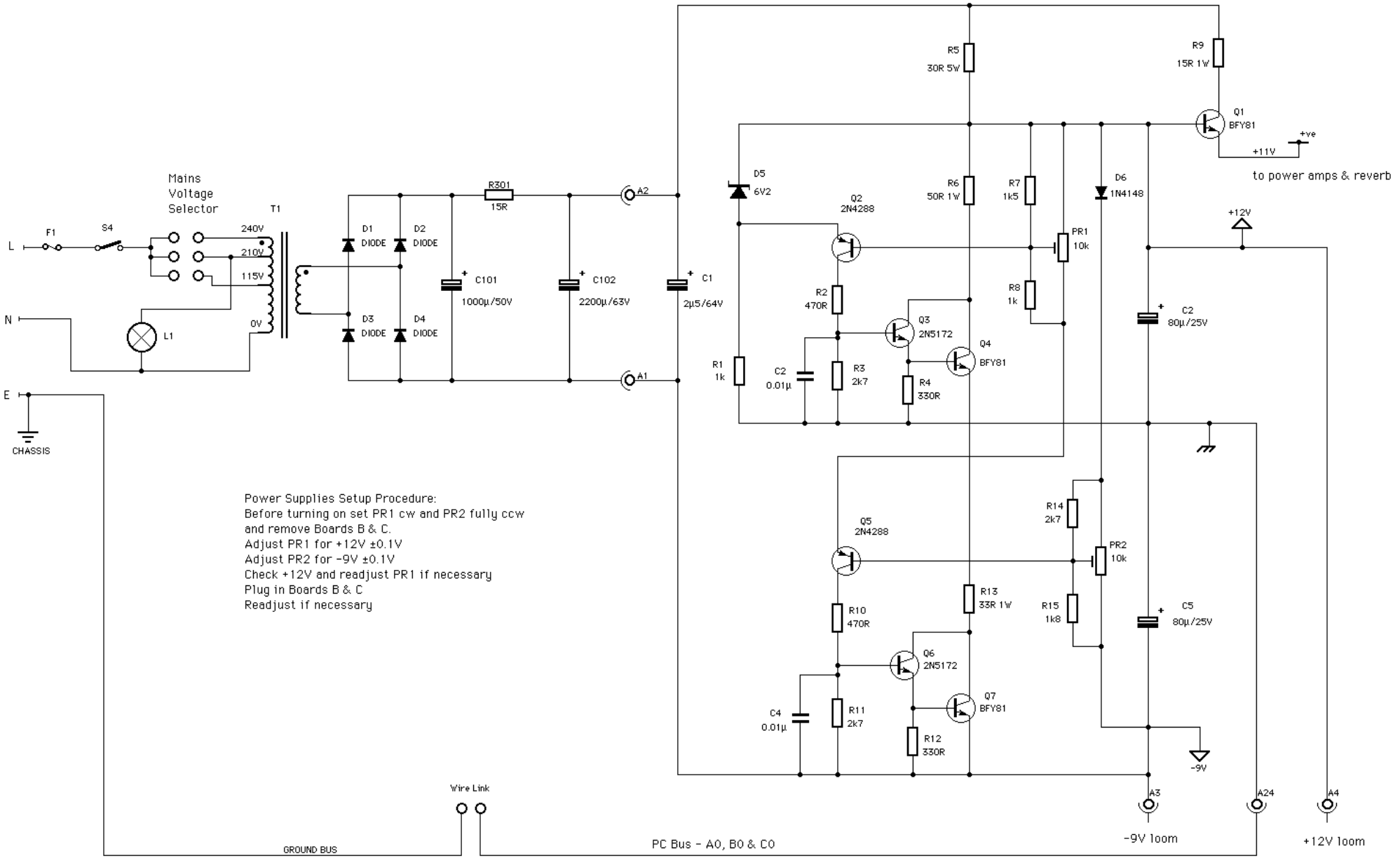


# EMS VCS3

Power Supply (Board A)

HINTON INSTRUMENTS
Oldford, Somerset, England

| |
|---|
| Drawing 6 of 6 |
| Assembly: VSC3 I & II, Synthi A |
| Redrawn by: Graham Hinton ©1996 |
| Version: 1974 |
| Last Modified: 1/07/96 2:20 pm |

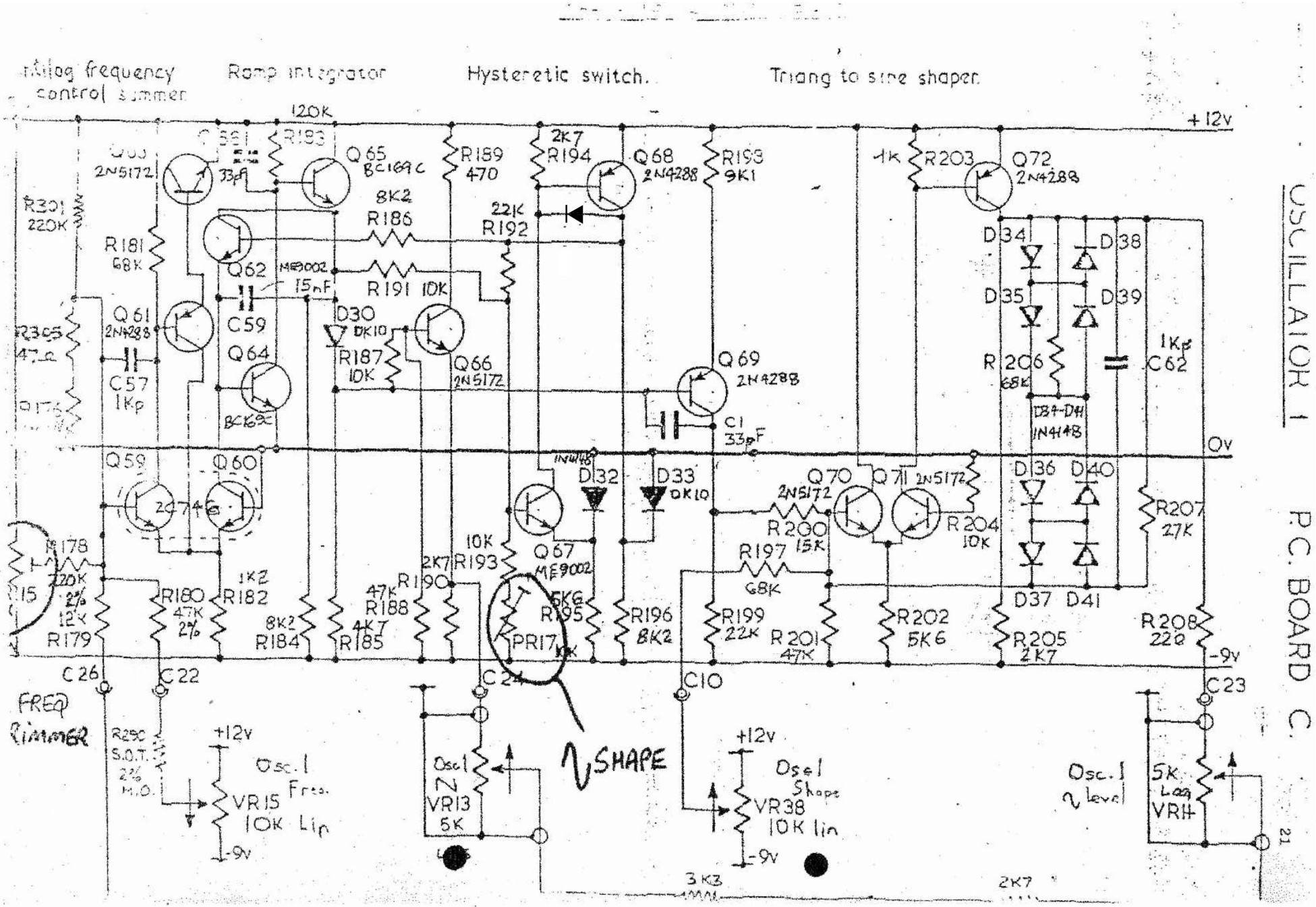


OSCILLATOR 1 P.C. BOARD C.

SCANNED BY YUSYNTH - CANNOT BE SOLD

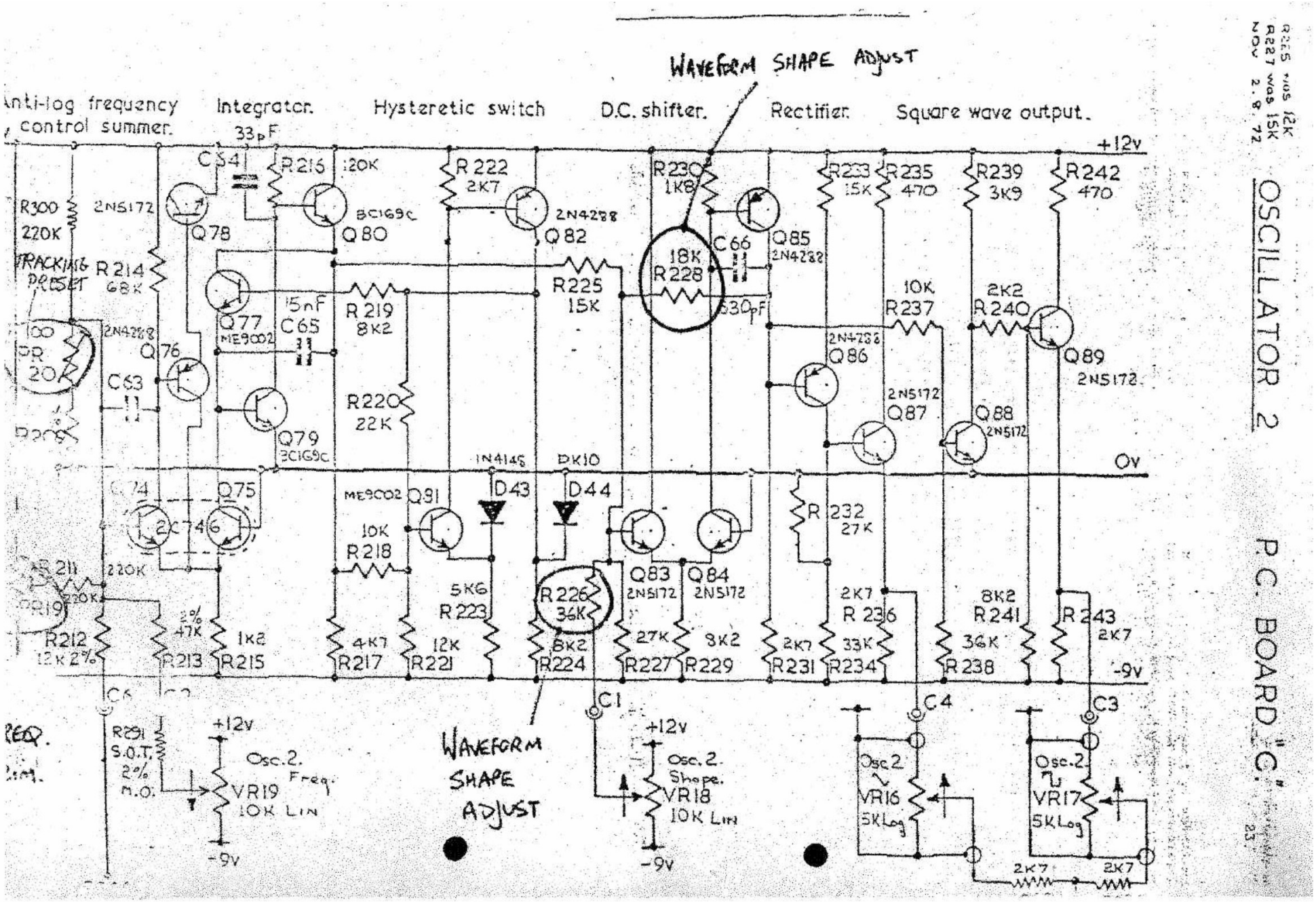


SCANNED BY YUSYNTH - CANNOT BE SOLD

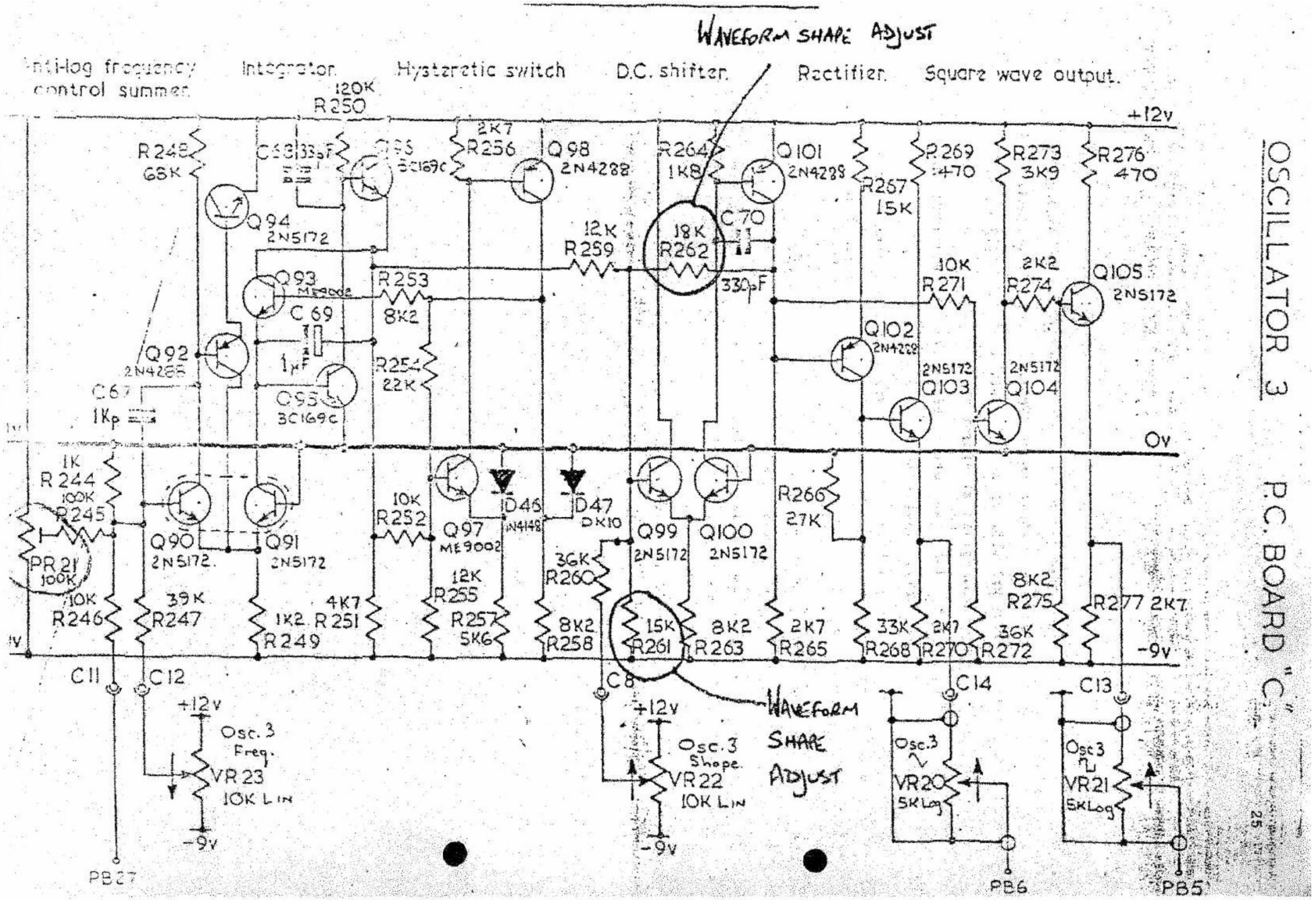


SCANNED BY YUSYNTH - CANNOT BE SOLD

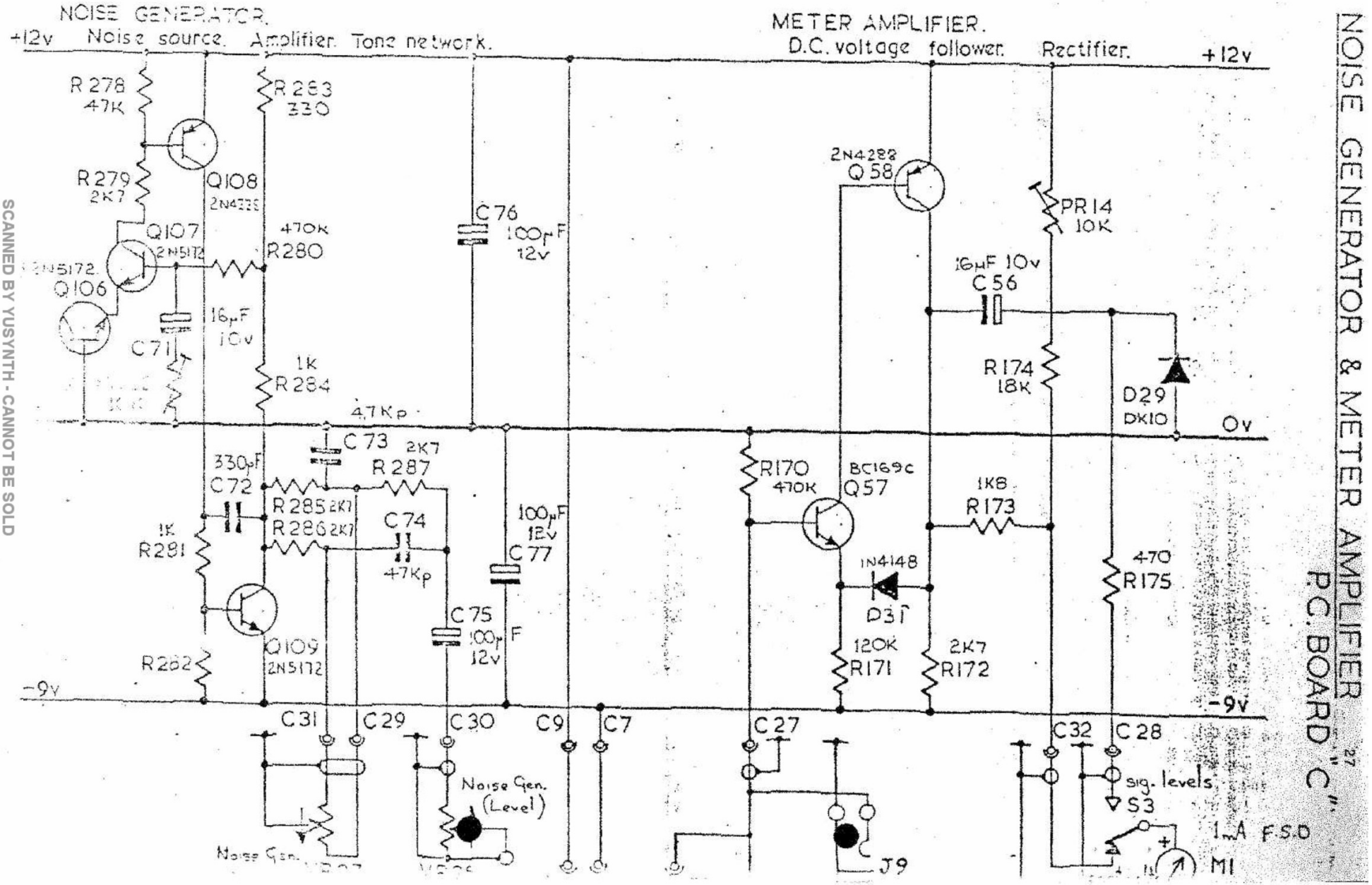


SCANNED BY YUSYNTH - CANNOT BE SOLD

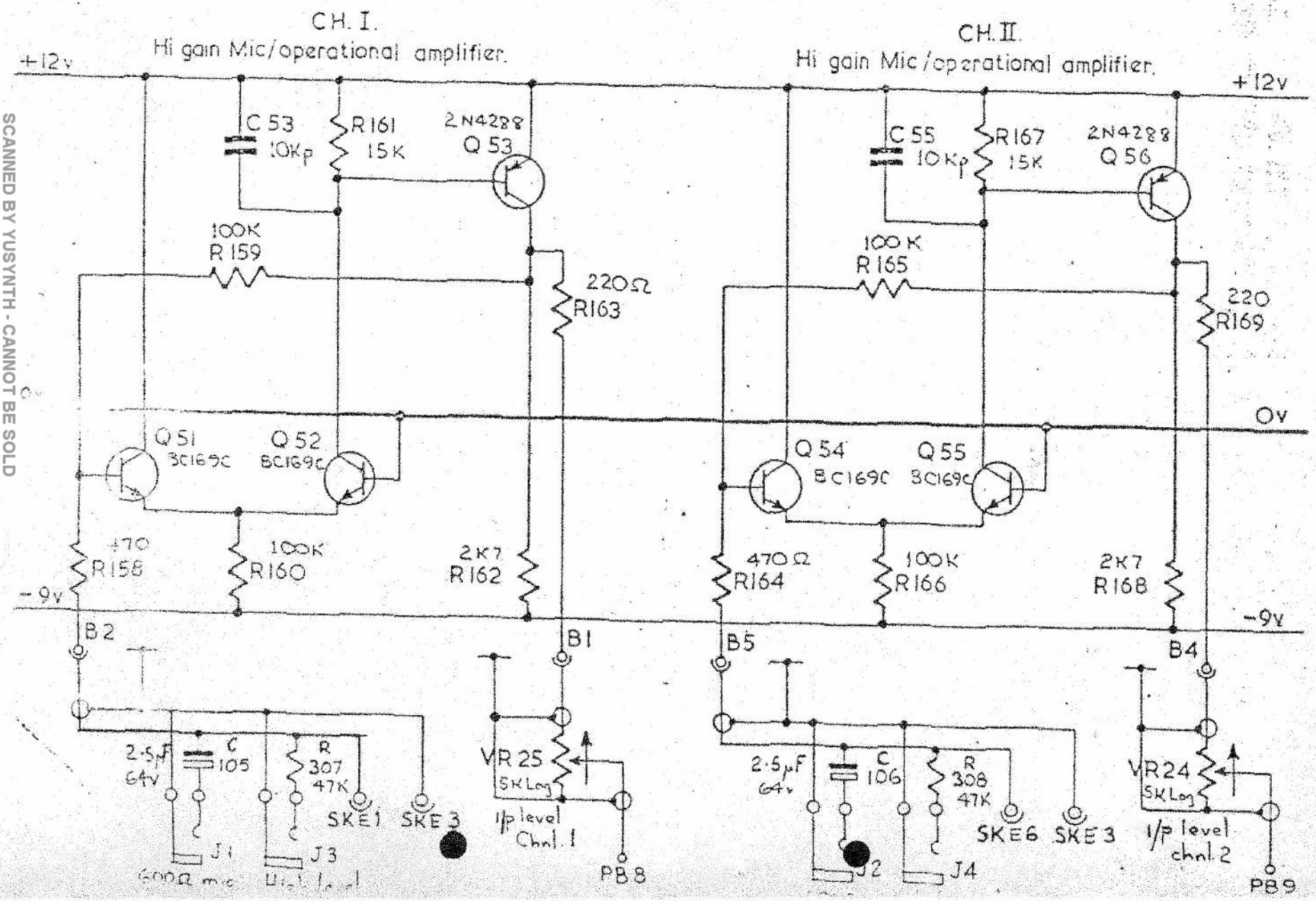


SCANNED BY YUSYNTH - CANNOT BE SOLD

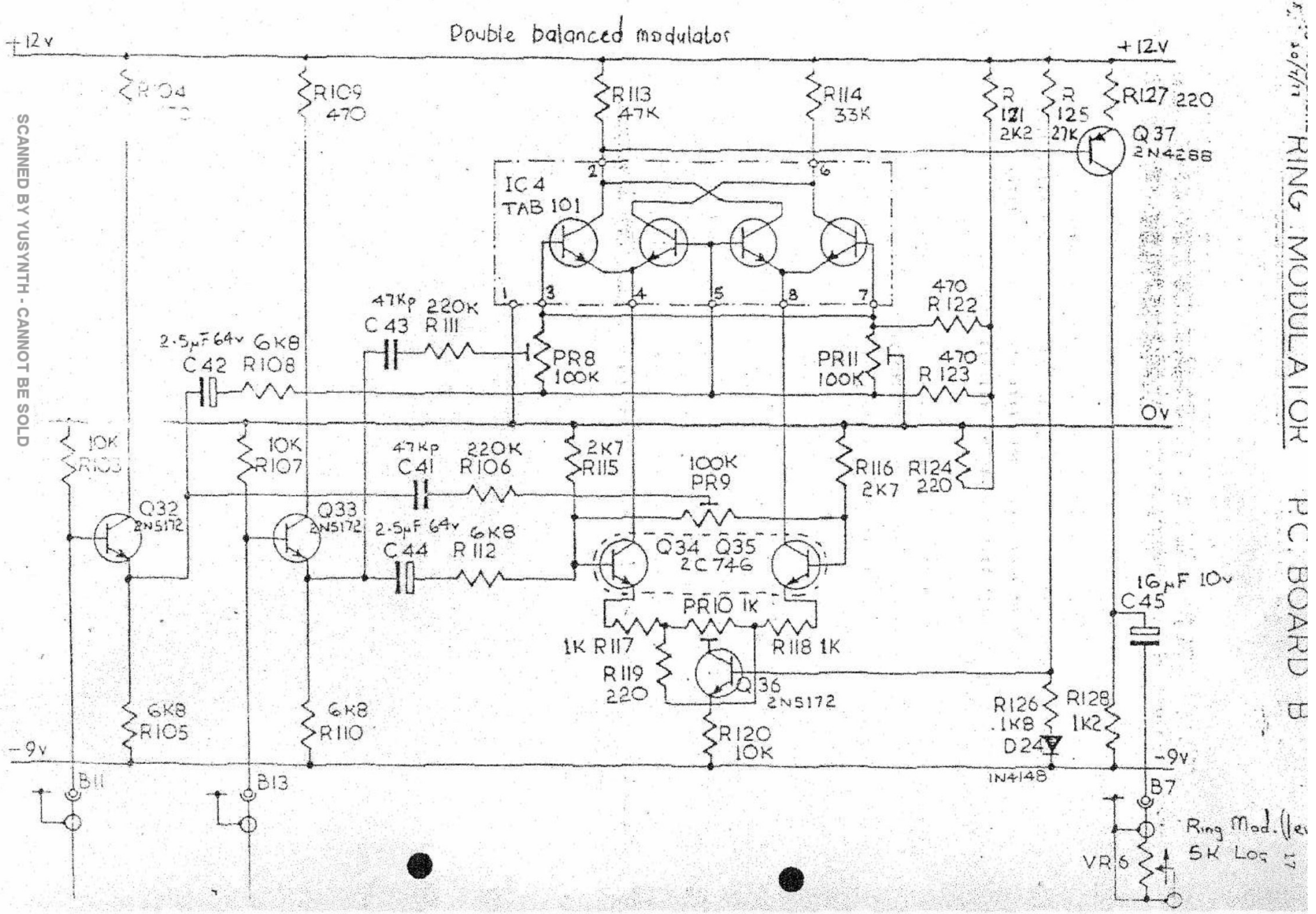


SCANNED BY YUSYNTH - CANNOT BE SOLD

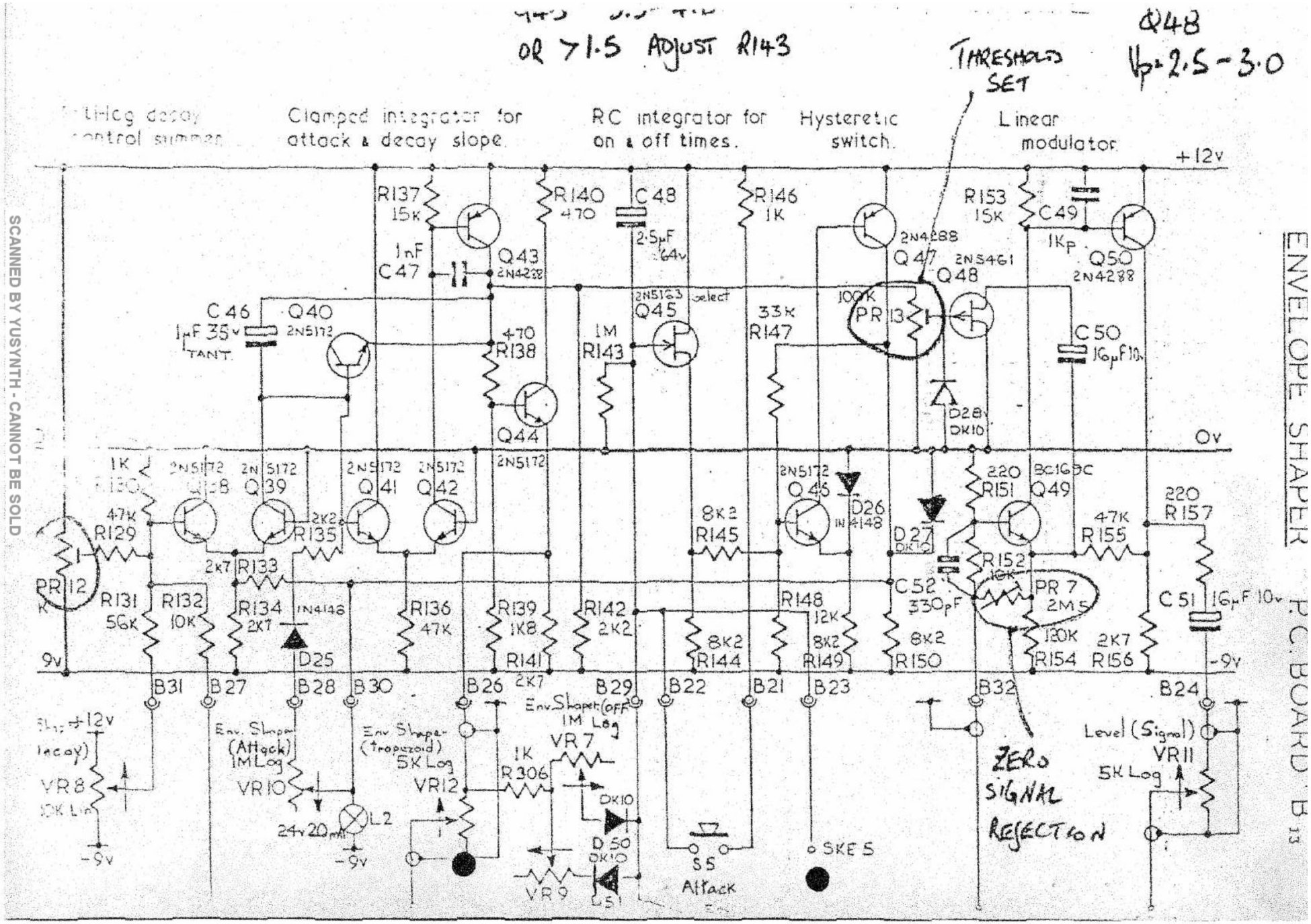


SCANNED BY YUSYNTH - CANNOT BE SOLD

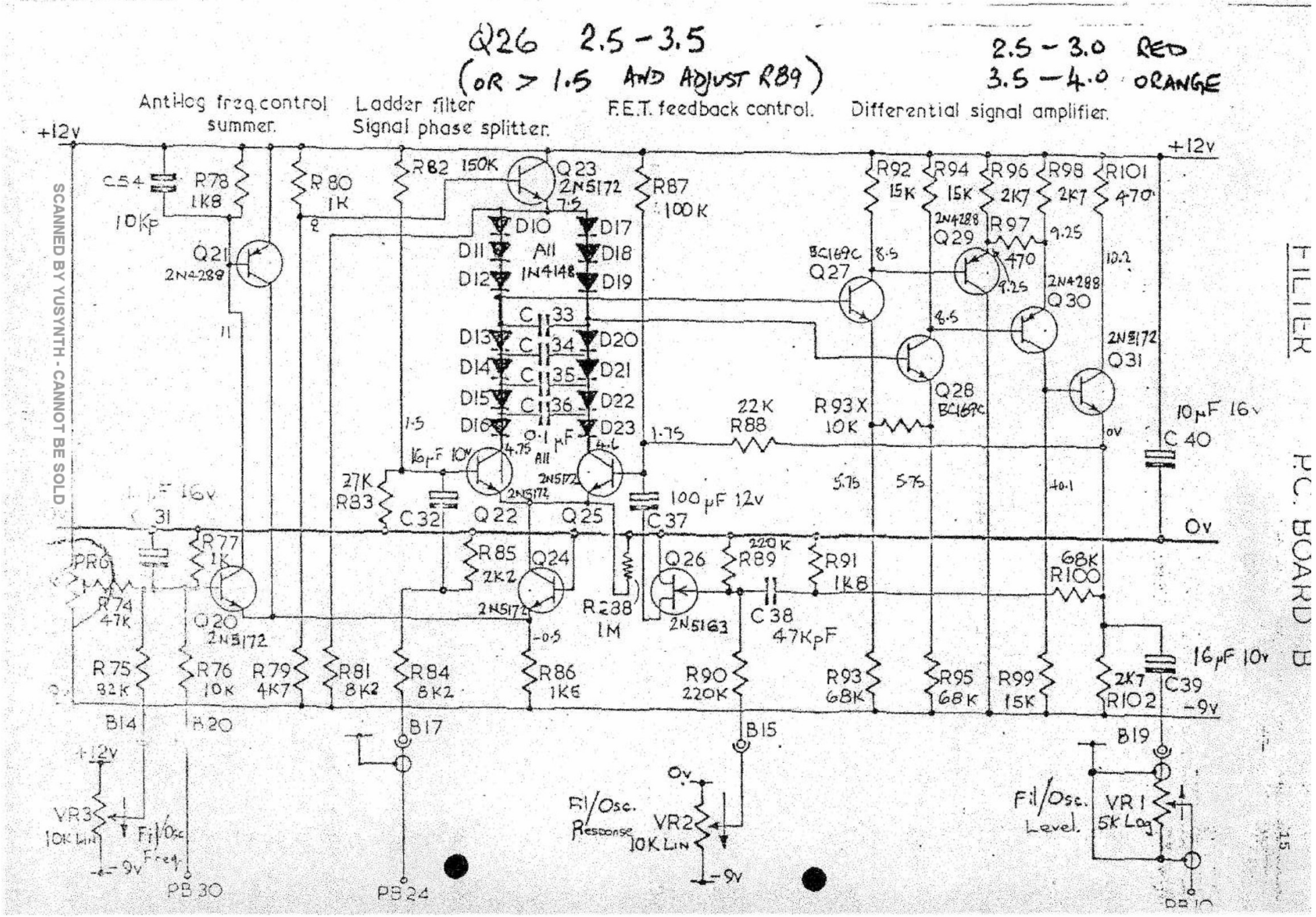
Q26 2.5 - 3.5
(OR > 1.5 AND ADJUST R89)
2.5 - 3.0 RED
3.5 - 4.0 ORANGE
Anti-Hog freq. control summer.
Ladder filter Signal phase splitter.
F.E.T. feedback control.
Differential signal amplifier.
+12v
0v
-9v
C54 10Kp
R78 1K8
R80 1K
R82 150K
Q23 2N5172
R87 100K
D10 D11 D12 D13 D14 D15 D16 D17 D18 D19 D20 D21 D22 D23 All IN4148
C33 C34 C35 C36 0.1 µF
16µF 10v
C32
27K R83
Q22 Q25
2N5172
100 µF 12v C37
Q21 2N4288
R92 15K
R94 15K
R96 2K7
R98 2K7
R101 470
Q27 BC169C
Q29 2N4288
R97 470
Q30 2N4288
Q31 2N5172
Q28 BC169C
22K R88
R93X 10K
10µF 16v C40
C31
R77 1K
Q20 2N5172
PR6
R74 47K
R85 2K2
Q24 2N5172
R288 1M
Q26 2N5163
R89 220K
C38 47KpF
R91 1K8
68K R100
R75 82K
R76 10K
R79 4K7
R81 8K2
R84 8K2
R86 1K6
R90 220K
R93 68K
R95 68K
R99 15K
2K7 R102
C39 16µF 10v
B14
B20
B17
B15
B19
VR3 10K LIN
Fil/Osc Freq
VR2 10K LIN
Fil/Osc Response
VR1 5K Log
Fil/Osc Level
PB30
PB24
PB10
FILTER P.C. BOARD B
SCANNED BY YUSYNTH - CANNOT BE SOLD

# REVERBERATION P.C.BOARD "A"



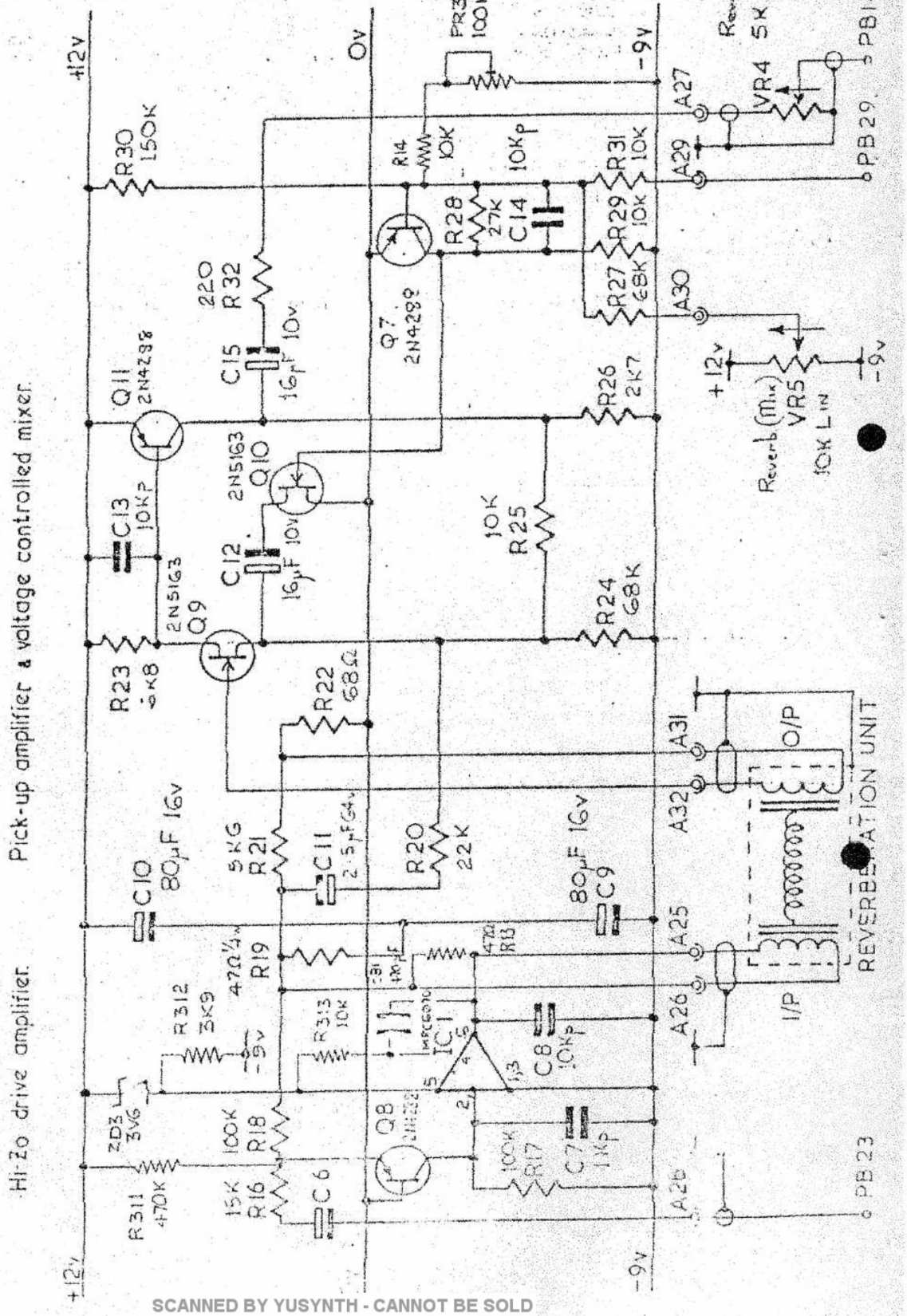


SCANNED BY YUSYNTH - CANNOT BE SOLD

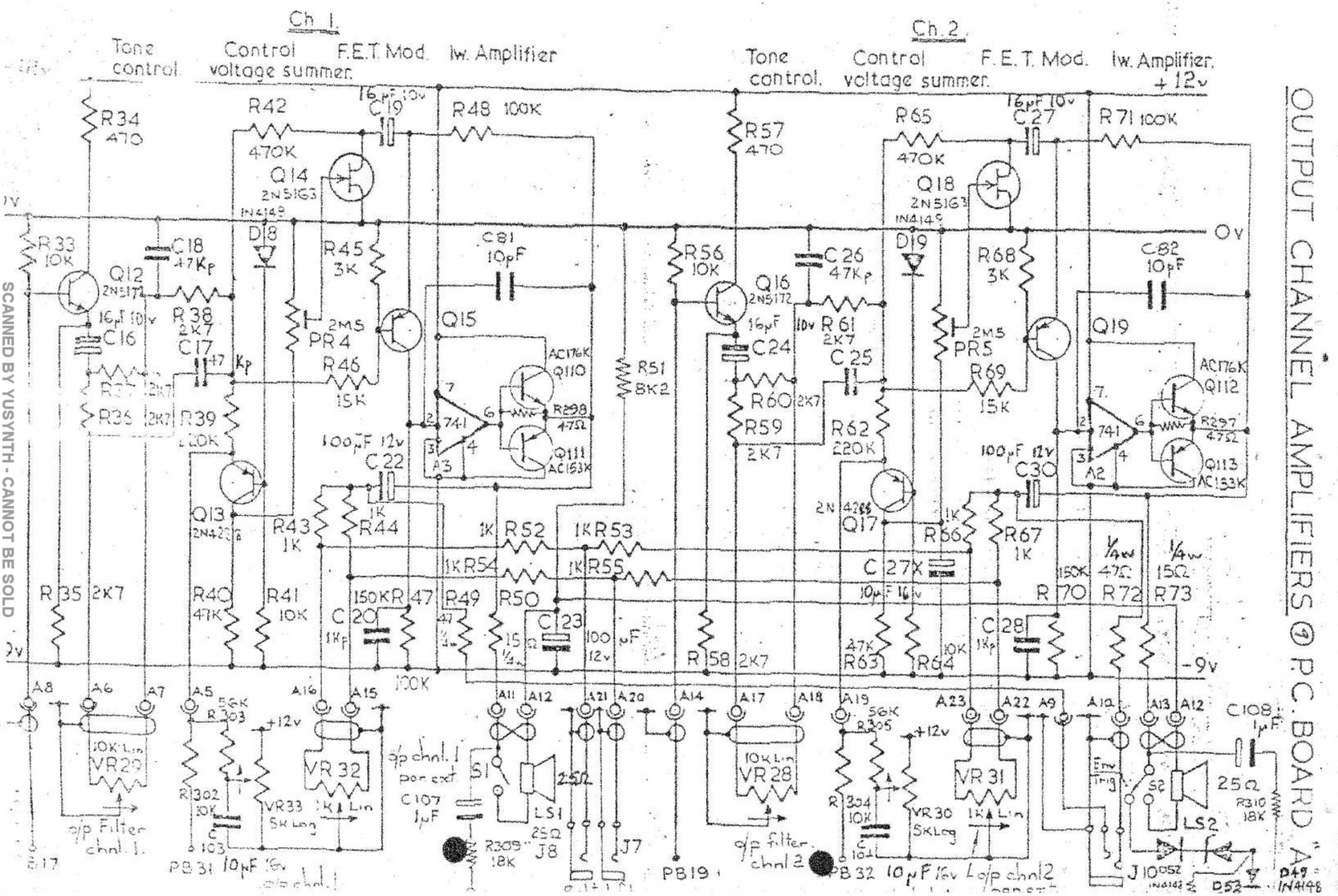


SCANNED BY YUSYNTH - CANNOT BE SOLD