Professional

ELKA

EK 22

PROGRAMMABLE
SYNTHESIZER

schematic diagrams

PLEASE NOTE

EK22/44 - EM22/44 MODIFICATIONS

IN ORDER TO AVOID:

A) DISMEMORIZATION OF RAM AT THE MOMENT OF SWITCHING ON OF AN INSTRUMENT CONNECTED WITH OTHERS DUE TO PARASITIC CURRENTS

B) FUSE'S BREAK OF + 5

WE SUGGEST YOU TO CONNECT WITH WIRE 0,50 OR 0,75 MASS TO EARTH ANCHORAGE.

BESIDES, TO AVOID THE CASUAL READING OF "CONSTRUCTOR'S CODE" ON EPROM OF BOARD 1708, WHICH COULD PROVOKE THE BAD FUNCTIONING OF DCG 1 AND/OR 2, CONNECT A DIODE WITH SIGNAL BA 130 OR EQUIVALENT BETWEEN PIN 24 AND PIN 28 (CATHODE ON 28) OF IC 1.

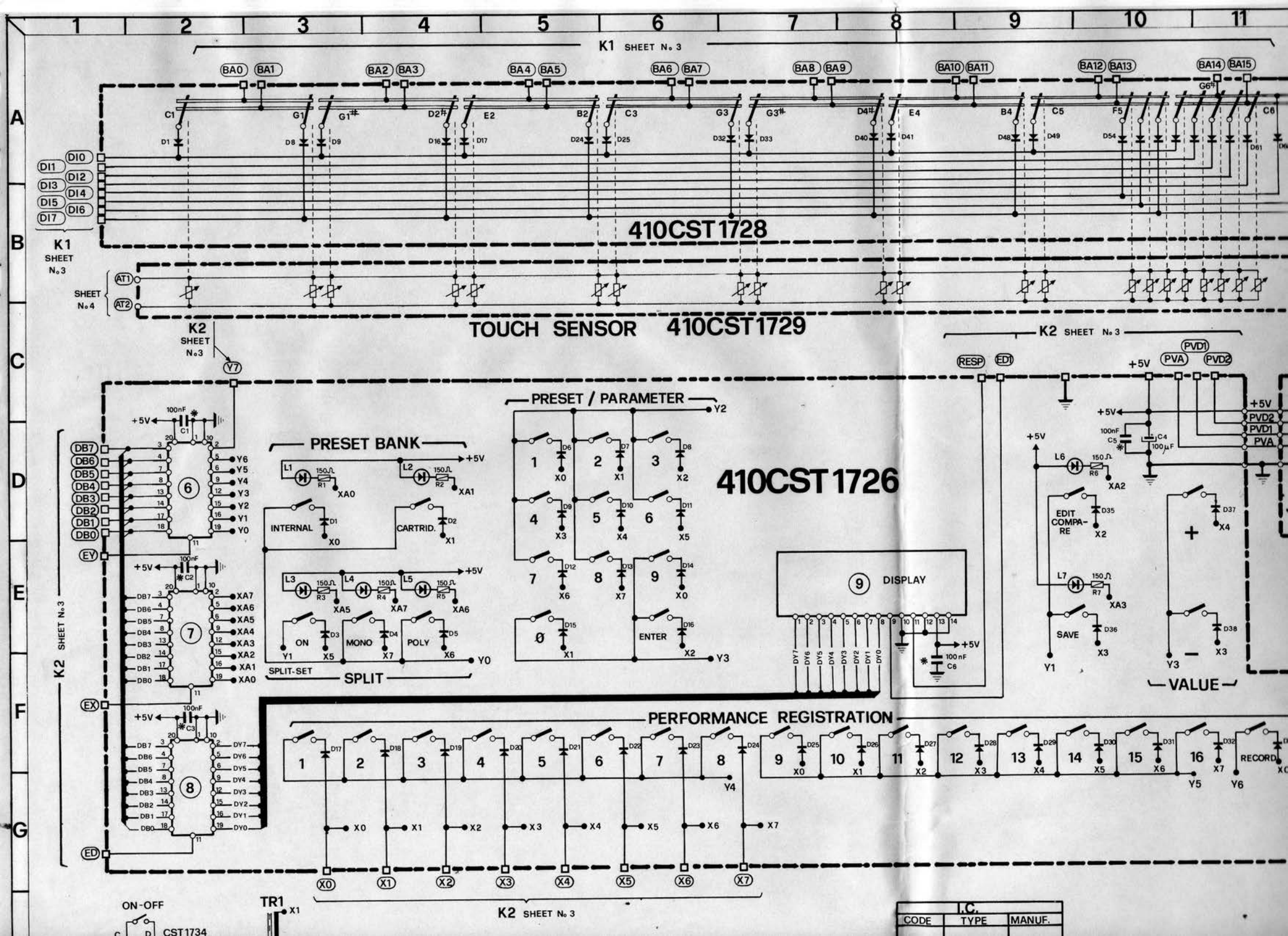

I.C.		
CODE	TYPE	MANUF.

410CST1726

410CST1733 POWER SUPPLY

I.C.		
CODE	TYPE	MANUF.
2	LM723	
3	78M12	
4	79M12	
5	μA79M05	
6	74LS377	
7	74AS374	
8	74LS377	
9	LCDLM016L	

CODE	TYPE	TRANS.
T1	TIP3055	
T2	TIP121	
T3	TIC116D	

LED = 935 B55

Z1 = 5,6V 0,5W
D1 = IN5404
D2÷D4 = 10D2 - 1N4002
F1 = Fuse 5AT
F2-F3 = » 500mAT
F4 = » 500mAT
F5 = » 1AT
BR1 = B80 C5000/3300
BR2 = W02-BS2-PG120
TR = TRANSFORMER T146N
TR1 = » T146K

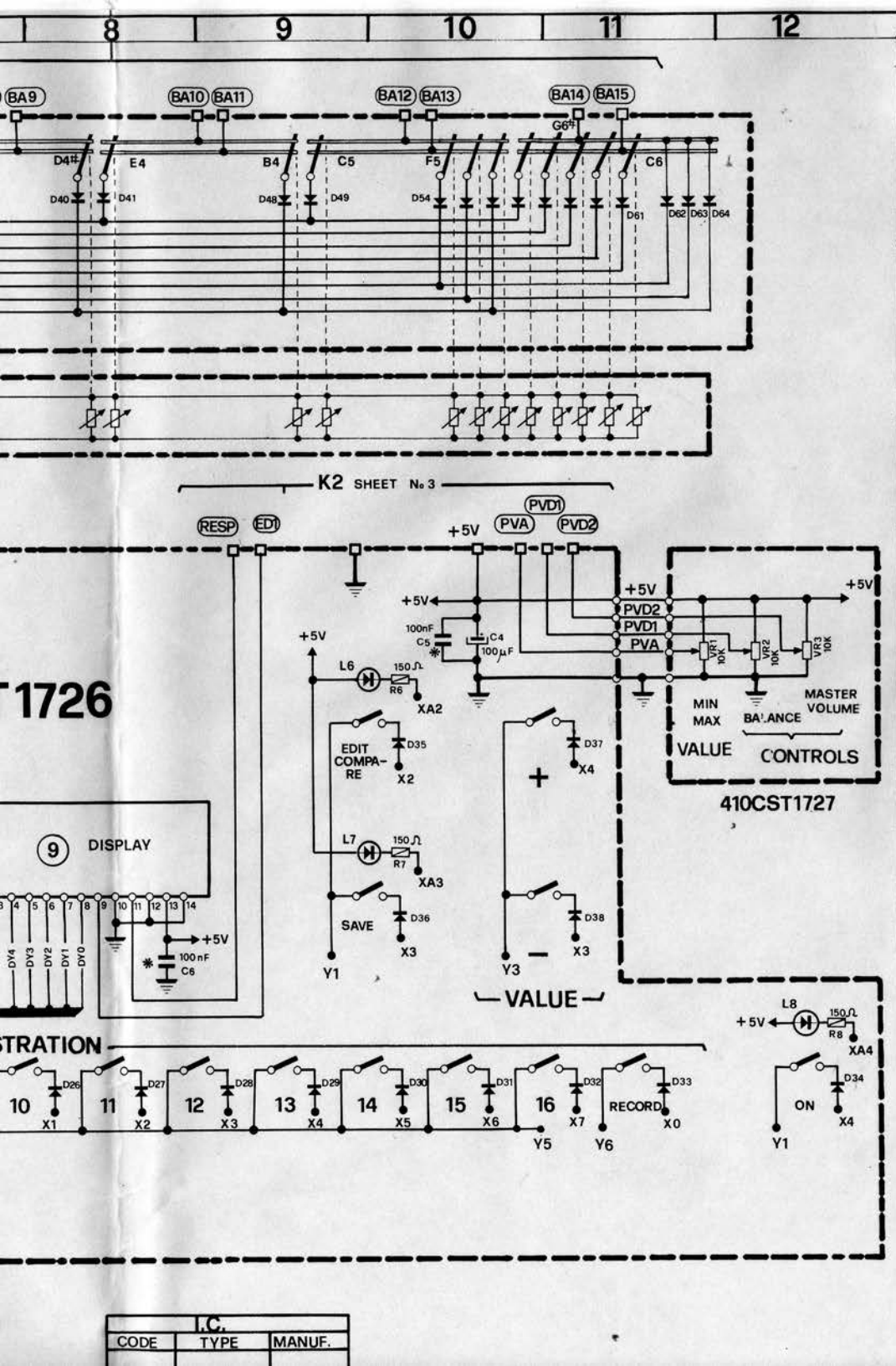

410CST1726

SWITCH SIDE

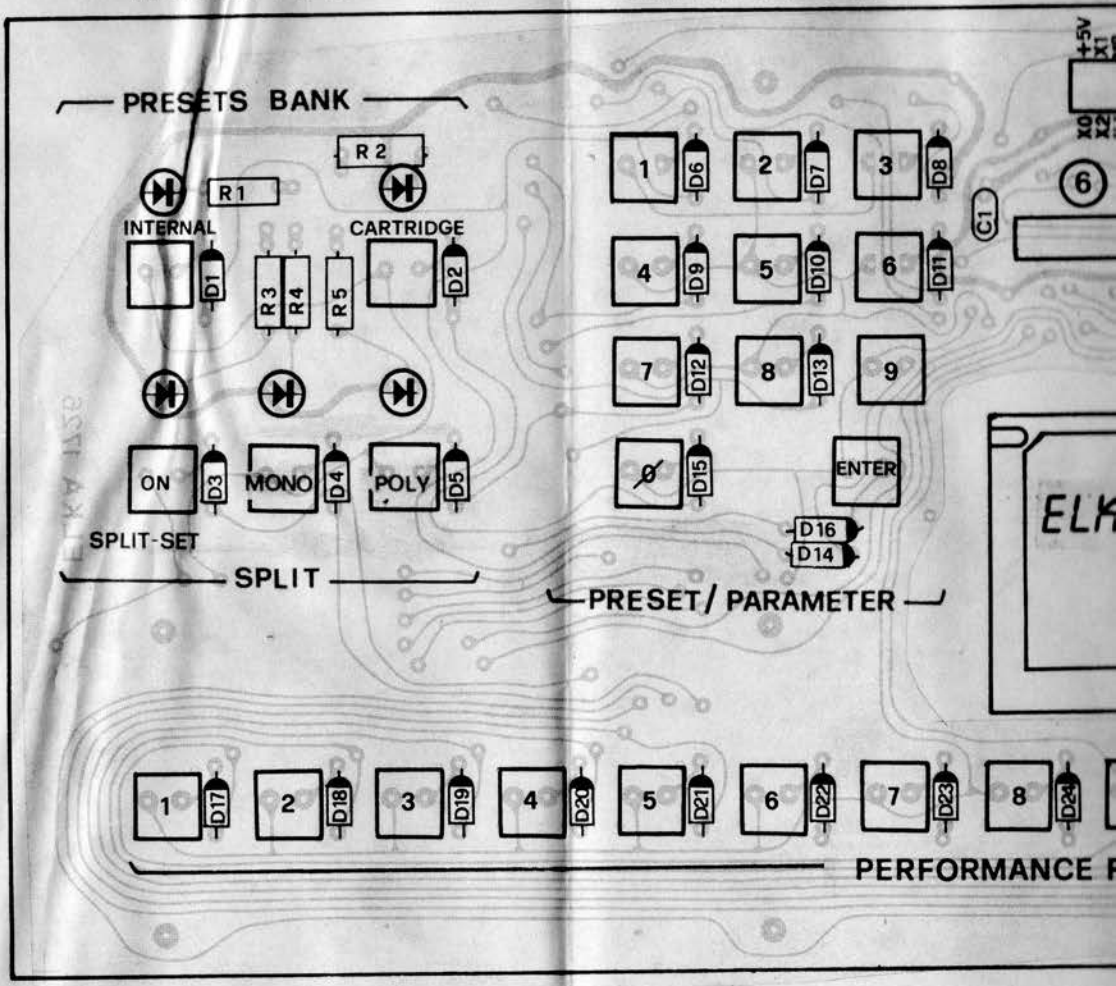

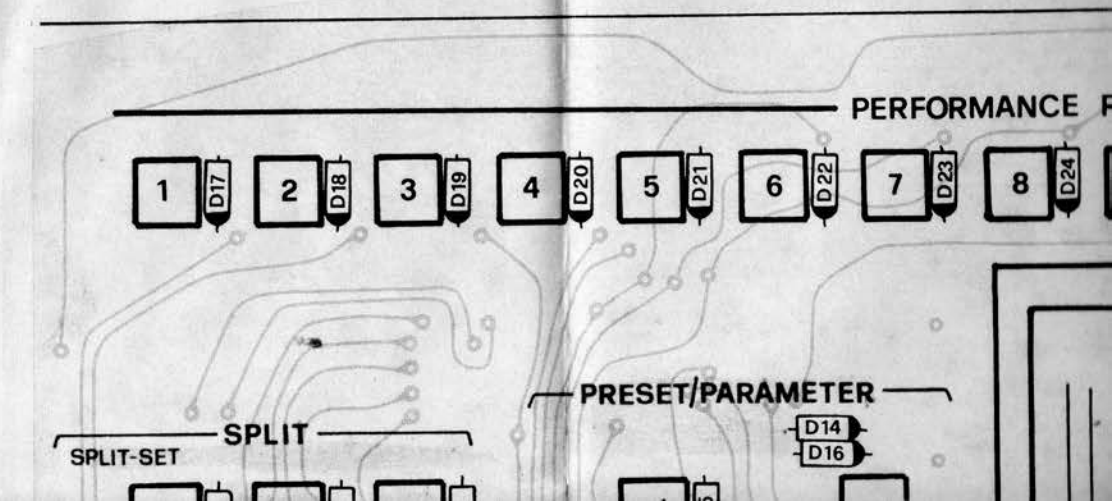

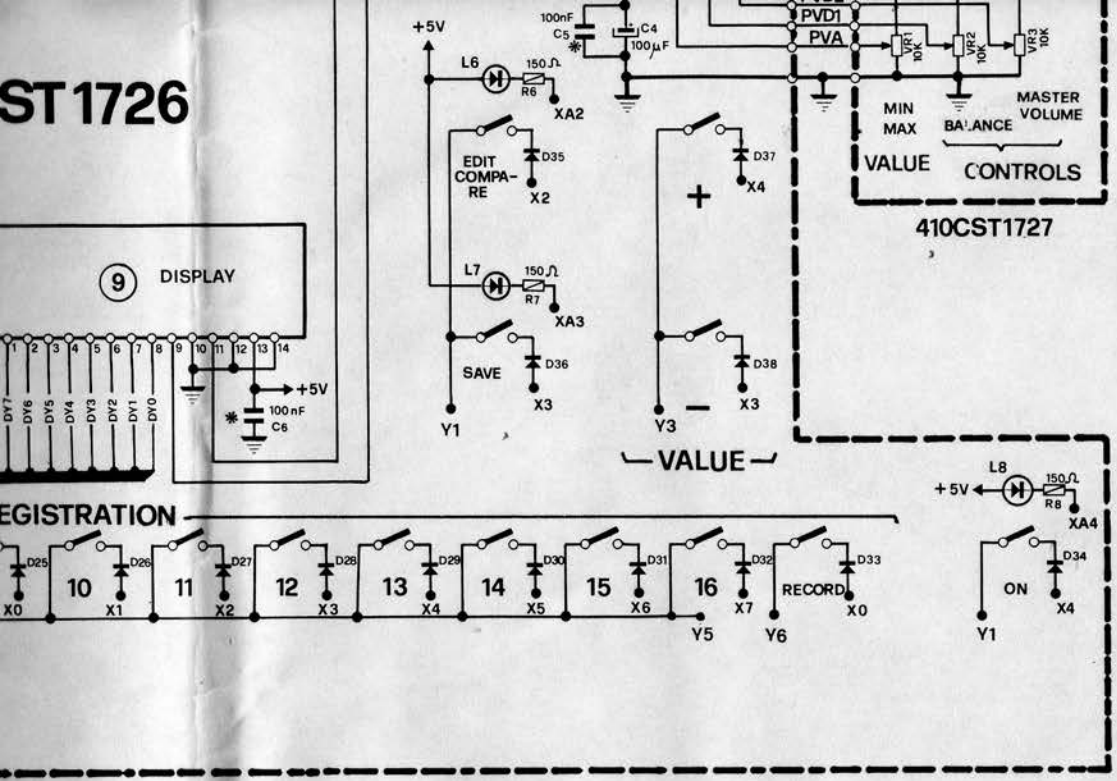

I.C.		
CODE	TYPE	MANUF.
2	LM723	
3	78M12	
4	79M12	
5	µA 79M05	
6	74LS377	
7	74AS374	
8	74LS377	
9	LCDLM016L	

CODE	TYPE	TRANS.
T1	TIP3055	
T2	TIP121	
T3	TIC116D	

LED = 935 B55

Z1 = 5,6V 0,5W
D1 = IN5404
D2÷D4 = 10D2 - 1N4002
F1 = Fuse 5AT
F2-F3 = » 500mAT
F4 = » 500mAT
F5 = » 1AT
BR1 = B80 C5000/3300
BR2 = W02-BS2-PG120
TR = TRANSFORMER T146N
TR1 = » T146K

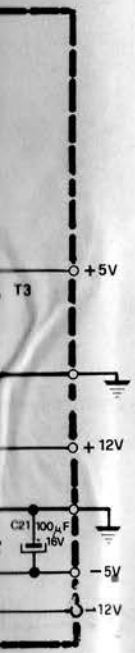

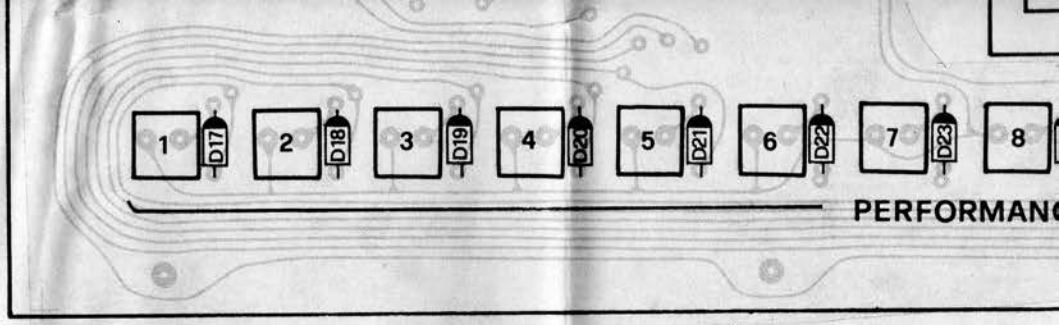

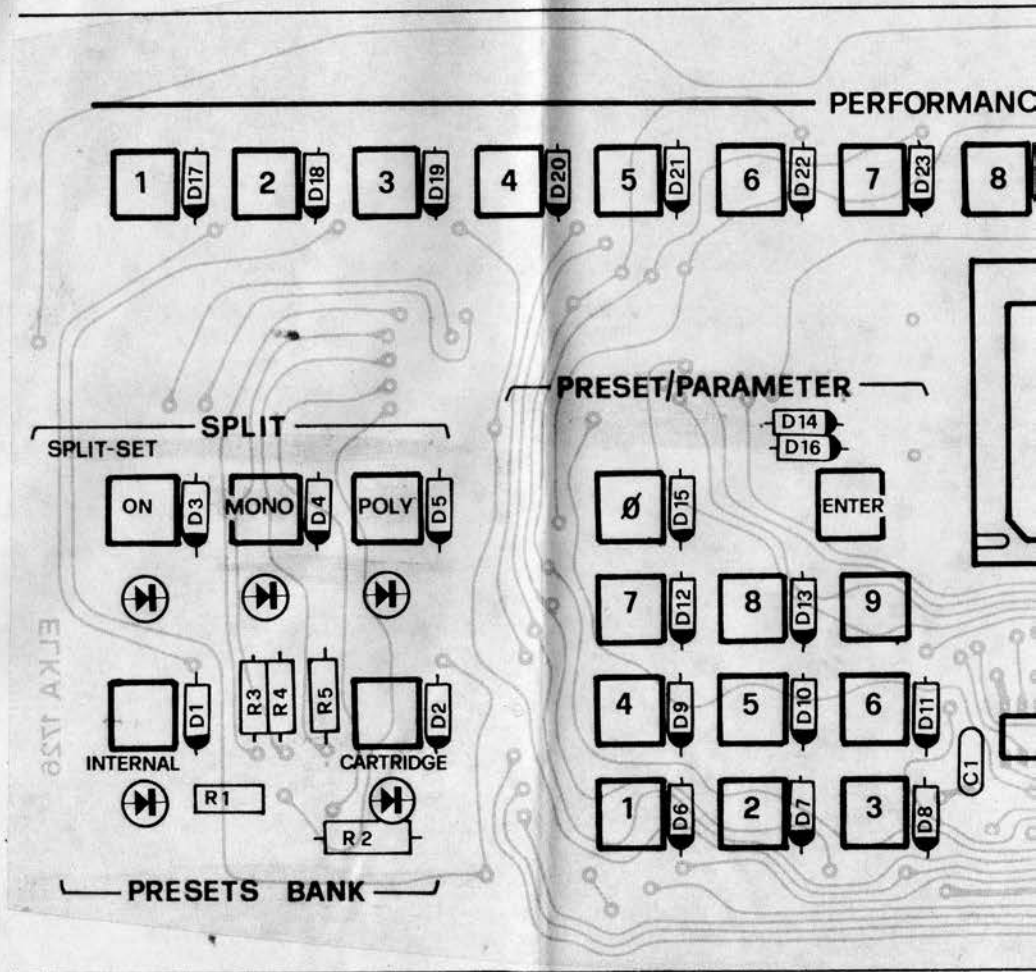

410CST1726 (COMPONENTS SID

8 9 10 11 12

26

SWITCH SIDE

(477GR17260)

410CST1727

(477GR17270)

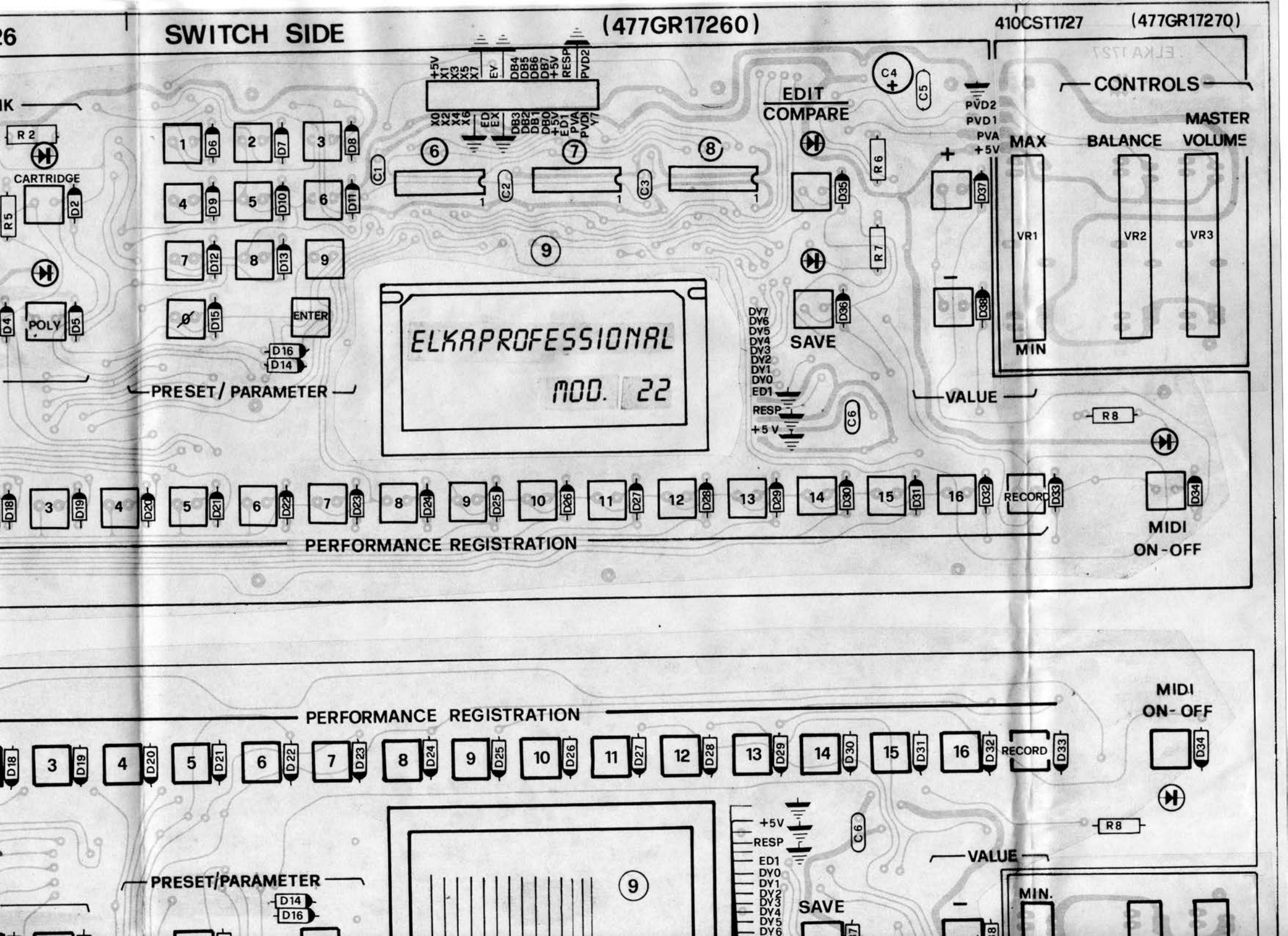

PERFORMANCE REGISTRATION
MIDI
ON- OFF
D18 3 D19 4 D20 5 D21 6 D22 7 D23 8 D24 9 D25 10 D26 11 D27 12 D28 13 D29 14 D30 15 D31 16 D32 RECORD D33
D34
R8
VALUE
C6
+5V
RESP
ED1
DY0
DY1
DY2
DY3
DY4
DY5
DY6
SAVE
PRESET/PARAMETER
D14
D16
9
MIN.

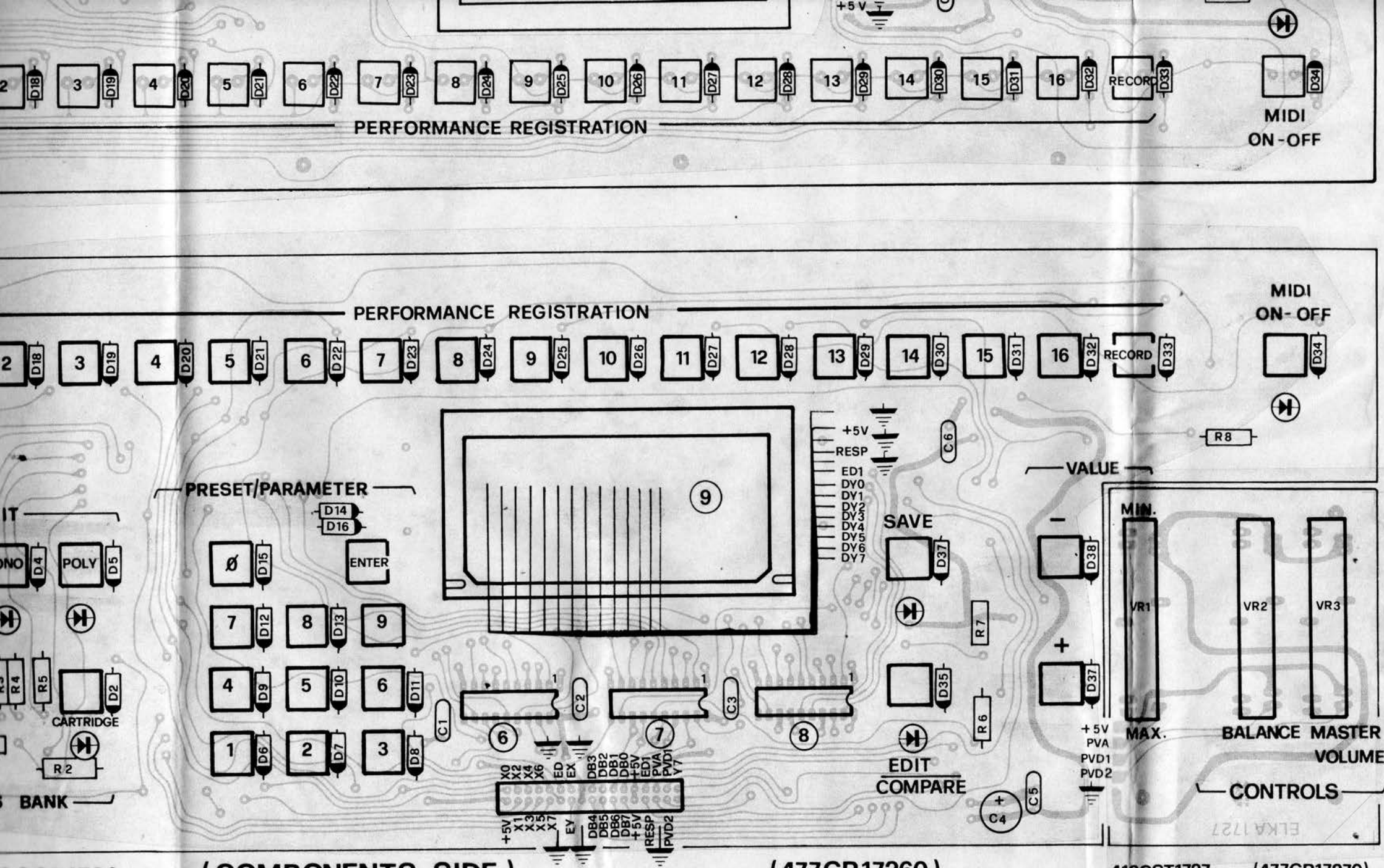

0CST1726 (COMPONENTS SIDE) (477GR17260) 410CST1727 (477GR17270)

Model :	EK 22
Sheet No.	2

410CST1728

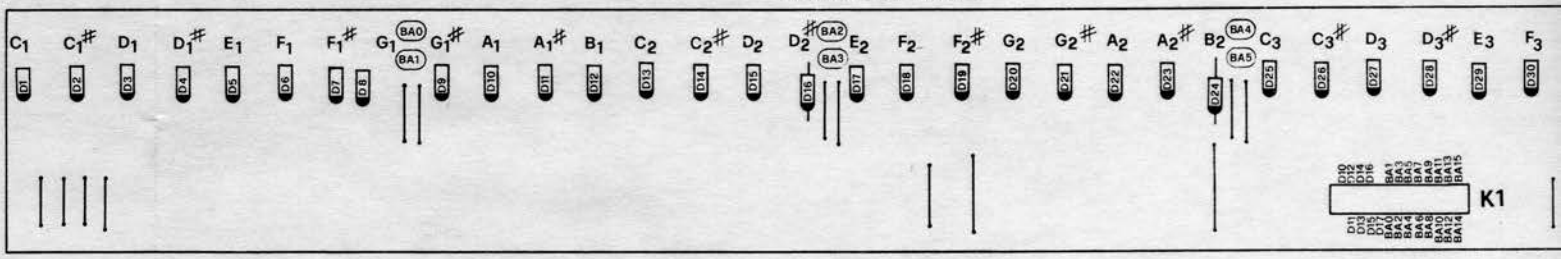

(COPPER SIDE)

410CST1729

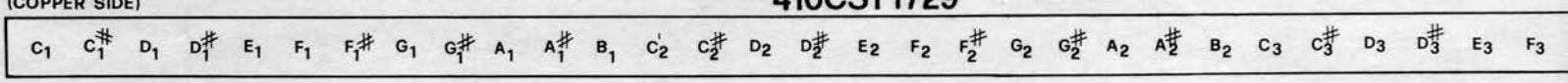

(477GR17330)
410CST1733

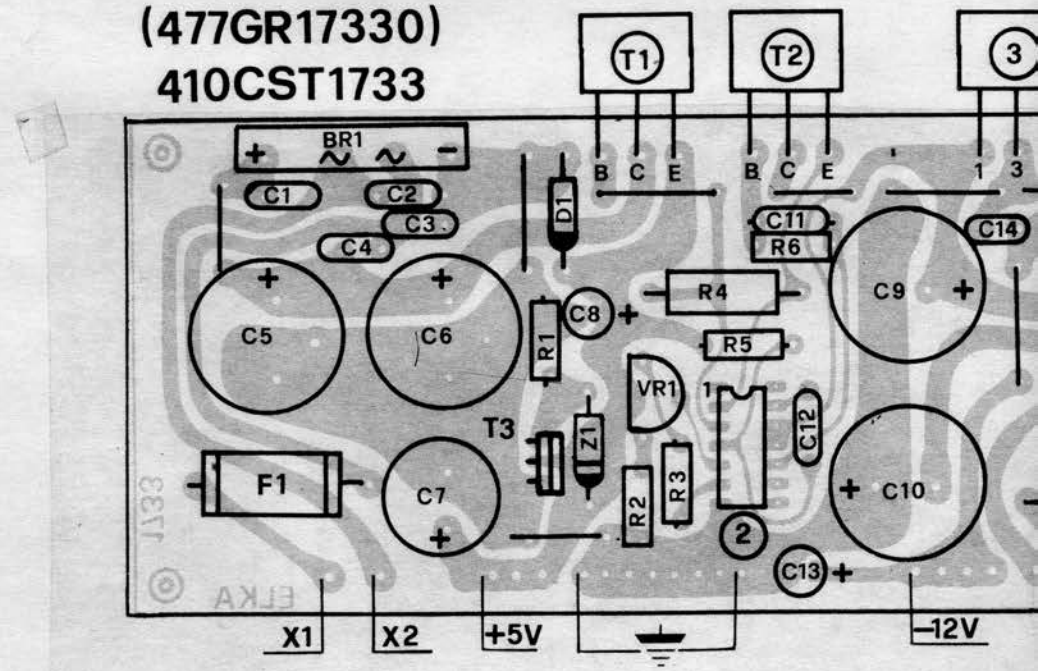

Model :	EK22
Sheet No.	2a

410CST1728

(477GR1

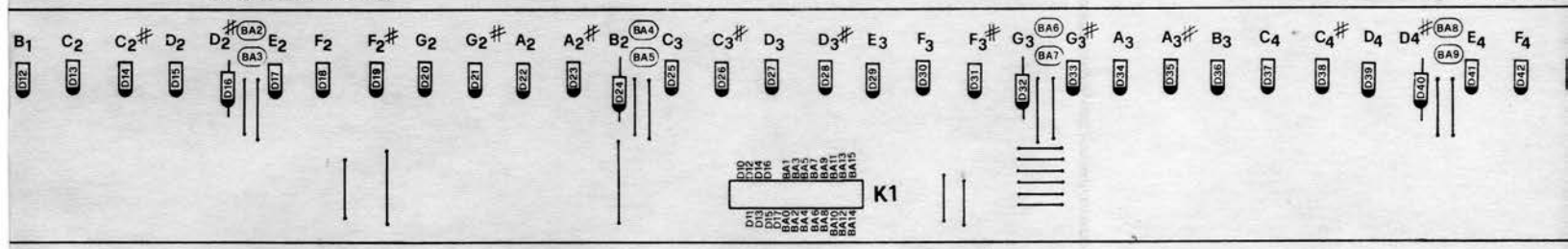

410CST1729

(477GR172

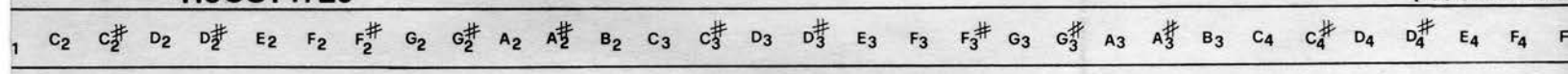

(477GR17330)
410CST1733

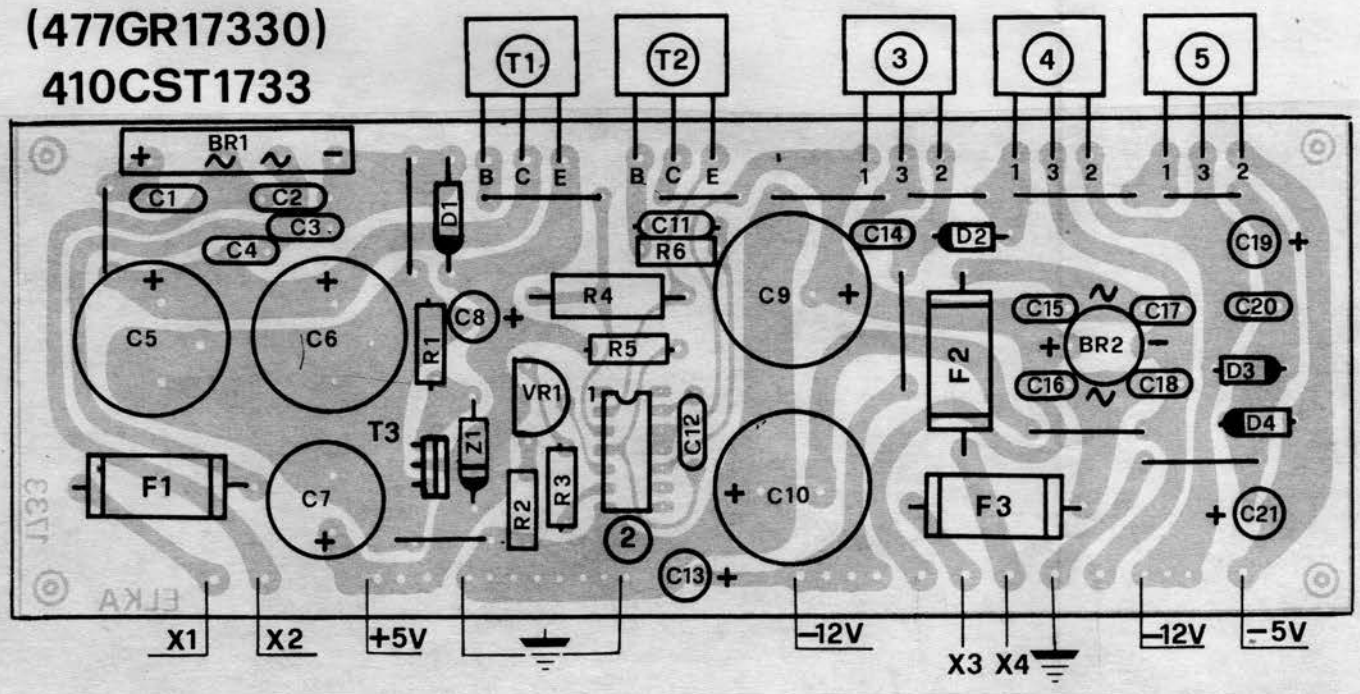

(477GR17280)

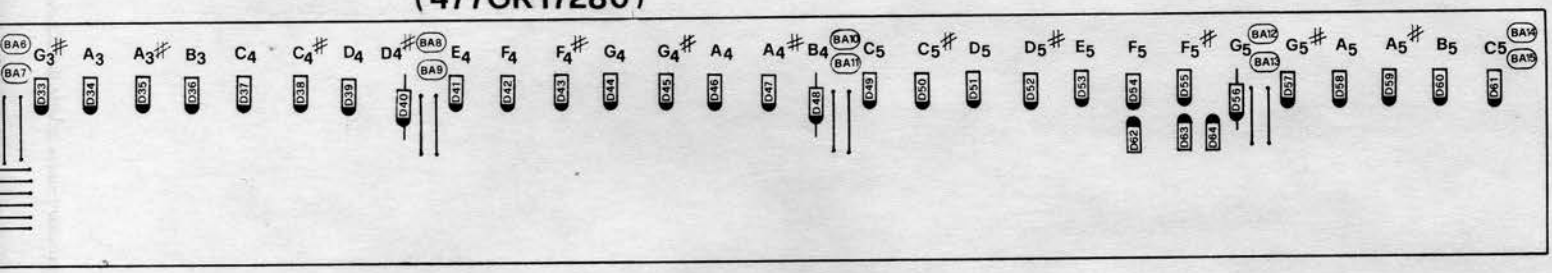

(477GR17290)

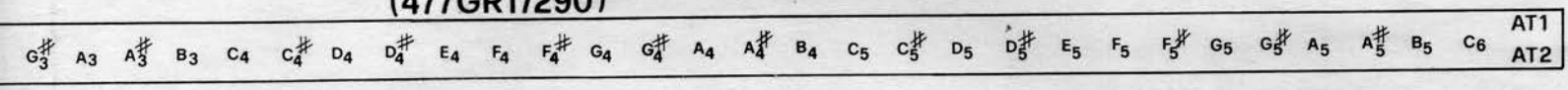

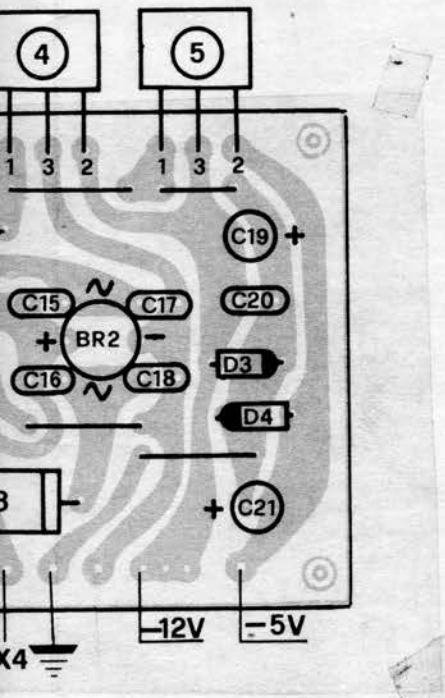

(410CST1734) (477GR17340)

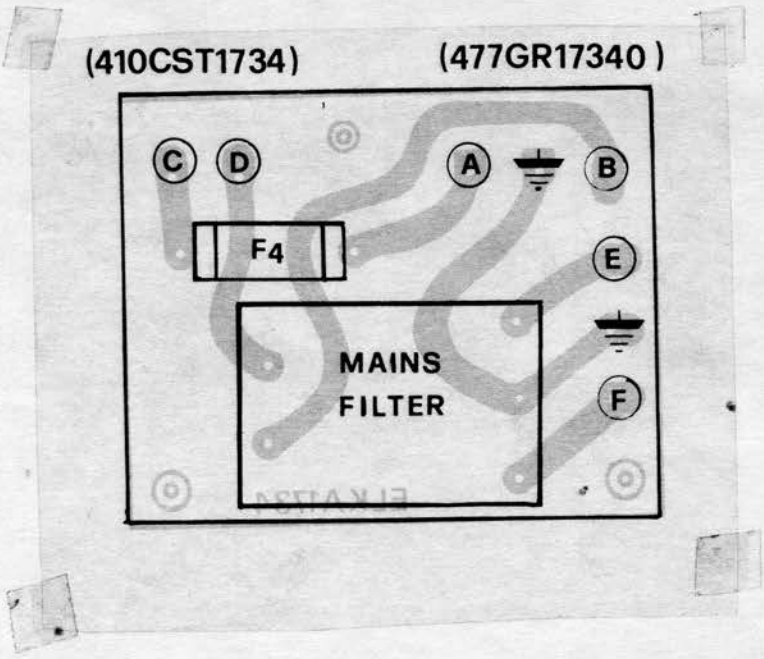

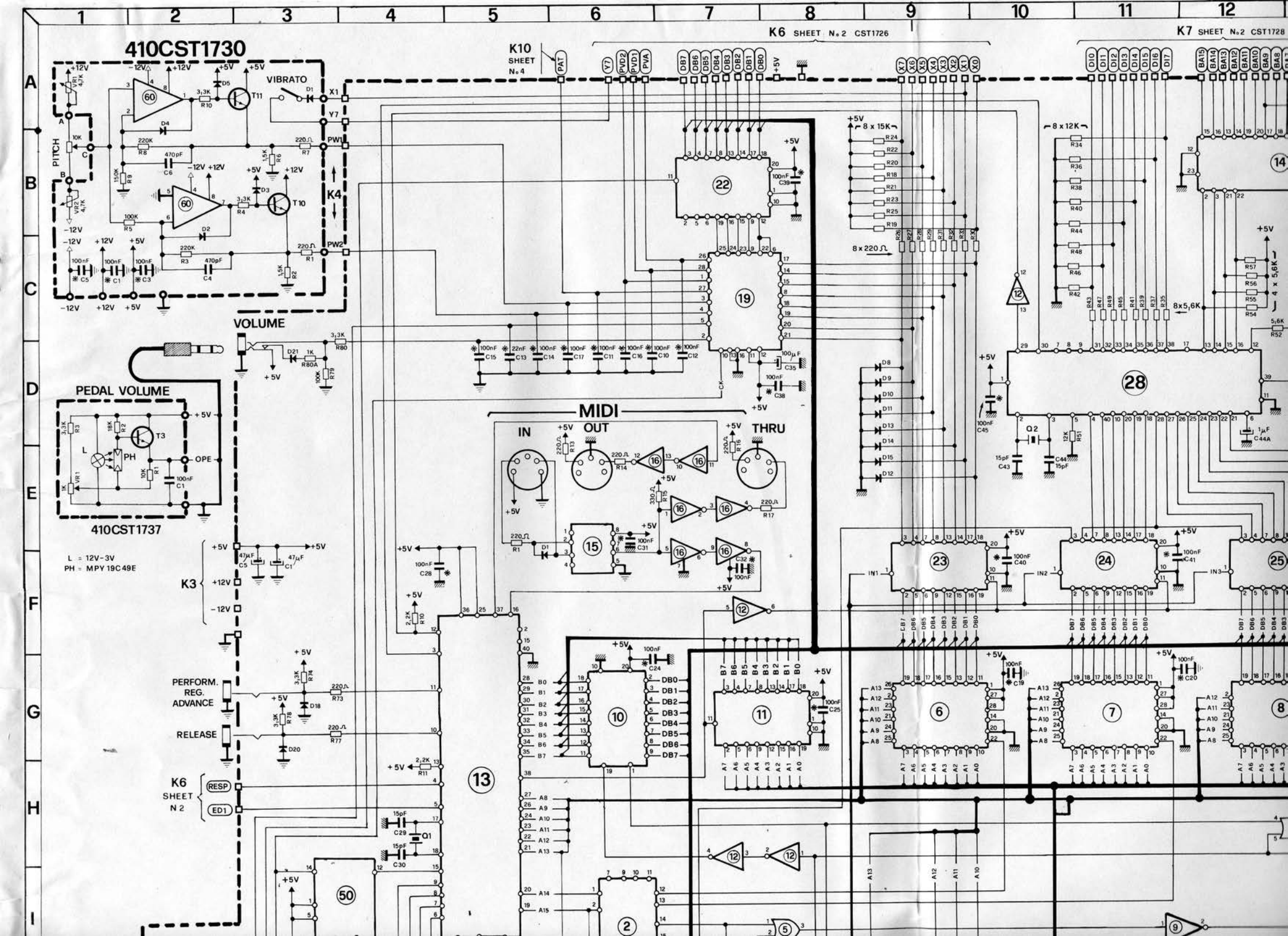
410CST1730
K10 SHEET No.4
K6 SHEET No.2 CST1726
K7 SHEET No.2 CST1728
VIBRATO
PITCH
VOLUME
PEDAL VOLUME
410CST1737
L = 12V-3V
PH = MPY 19C49E
MIDI
IN
OUT
THRU
PERFORM. REG. ADVANCE
RELEASE
K6 SHEET N 2
RESP
ED1
8 x 15K
8 x 12K
8 x 220
8x5,6K
4 x 5,6K

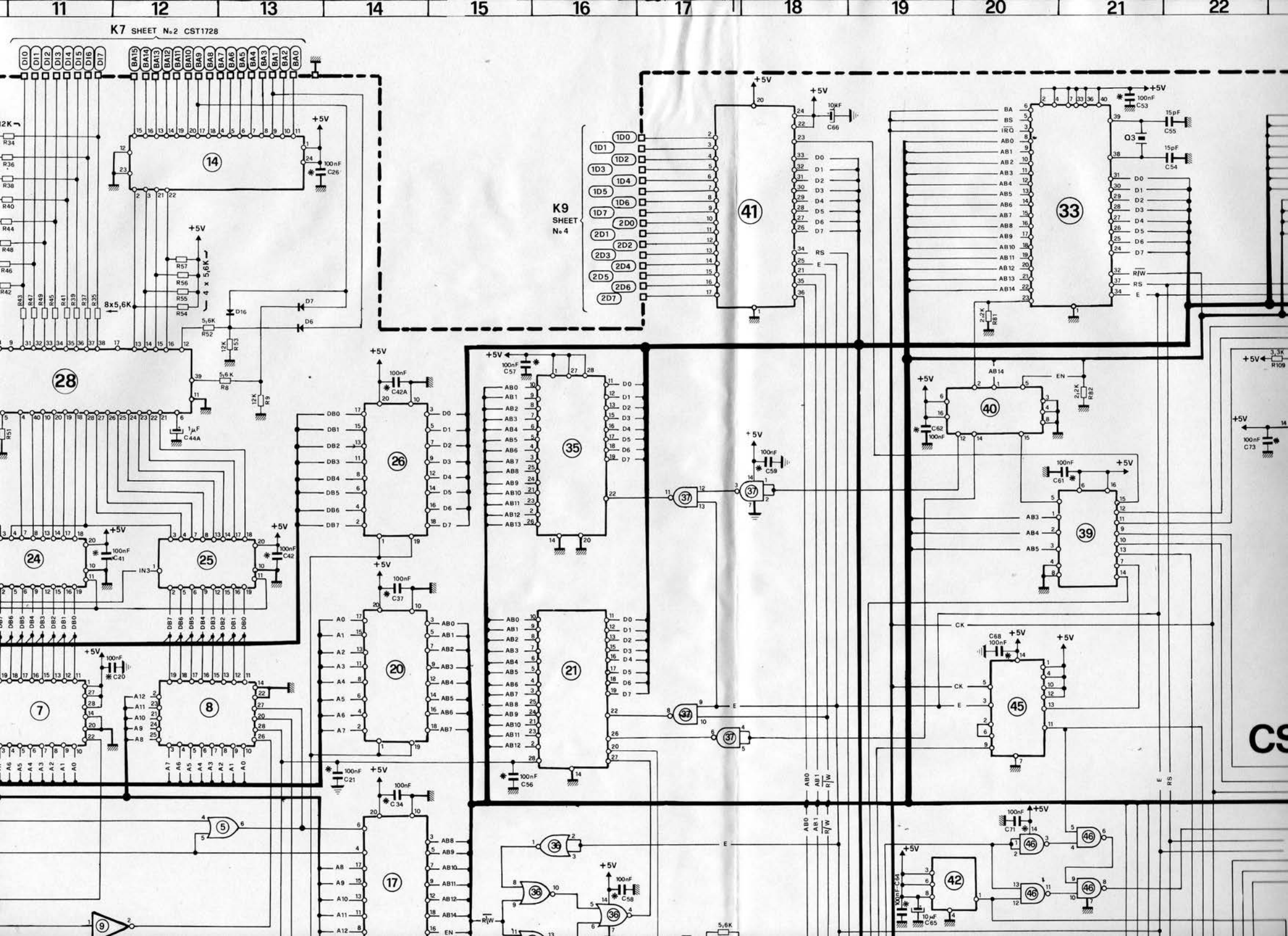

K7 SHEET No 2 CST1728
K9 SHEET No 4
CS

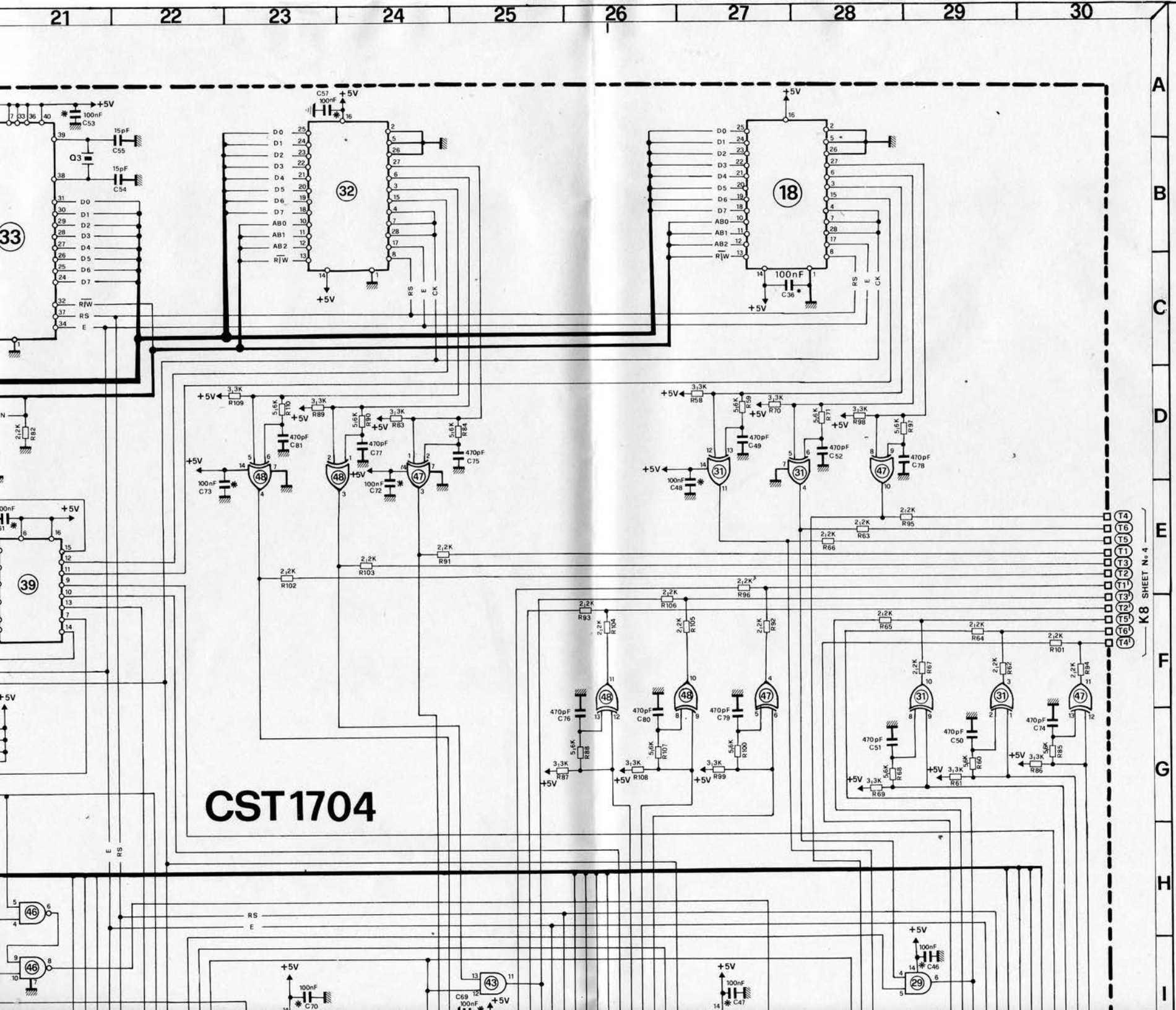

I.C.1704		
CODE	TYPE	MANUF.
1	7705	
2-3	74S138	
4-5	74S32	
6-7-35	27128	
8-21	6264-5565	
9	74S04	
10	74LS245	
11	74LS373	
13	TMS7001	
14	74HC4514	
15	6N138	
17-20-26	74LS244	
18-27-32-38	68B40	
19	ADC 809	
22	74LS377	
23÷25	74LS374	
28	Z8601	
29-43	74HC08	
30-37-44-46	74HC00	
31-47-48	74HC386	
33	68B09	
34-41-49	68B21	
36	74S02	
42	MM5437	
45	74LS74	
12	74LS04	
16	7404	
39-40	74LS138	
50	74LS93	
60	TL062	

CODE	TYPE	TRANS.
T2-T3 T10-T11	NPN	BC173B
T1	PNP	BC415B

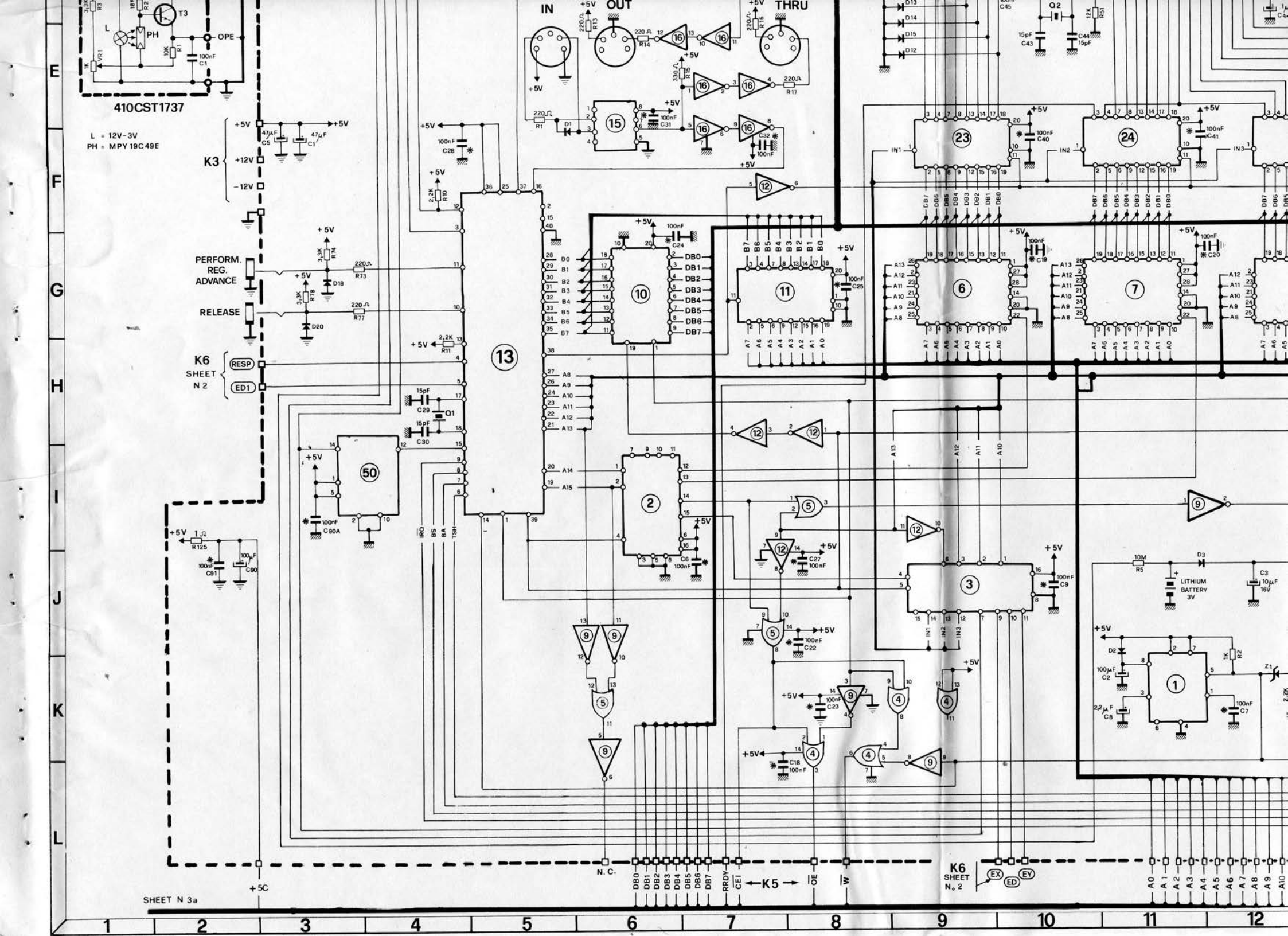
410CST1737
L = 12V-3V
PH = MPY 19C49E
IN
OUT
THRU
K3
+5V
+12V
-12V
PERFORM. REG. ADVANCE
RELEASE
K6 SHEET N 2
RESP
ED1
LITHIUM BATTERY 3V
K6 SHEET No 2
K5
N. C.
SHEET N 3a
+5C
IRQ
BS
BA
TSH
RRDY
CEI
OE
W
EX
ED
EY

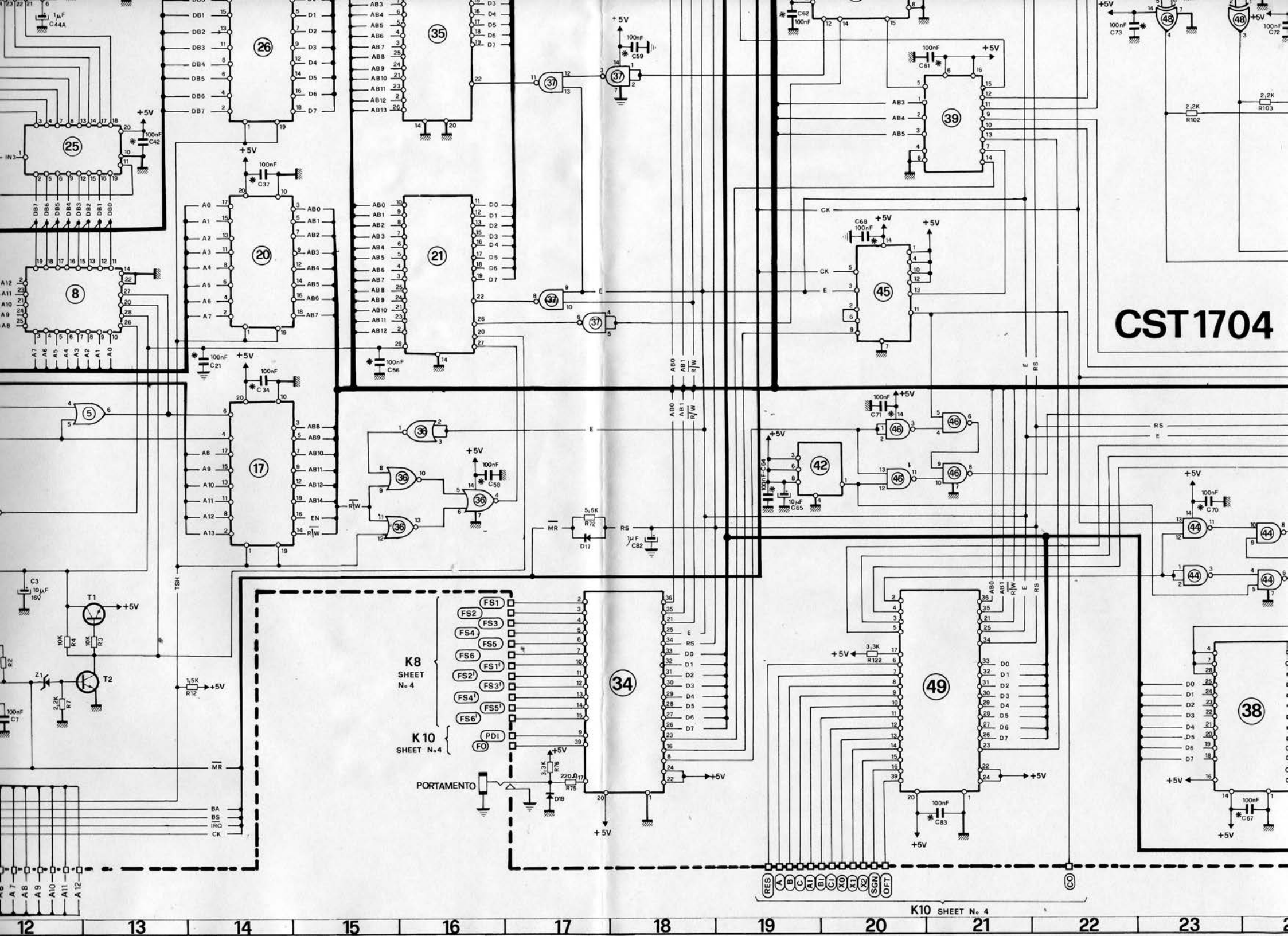
CST1704
K8 SHEET No 4
K10 SHEET No 4
PORTAMENTO
K10 SHEET No 4
12
13
14
15
16
17
18
19
20
21
22
23

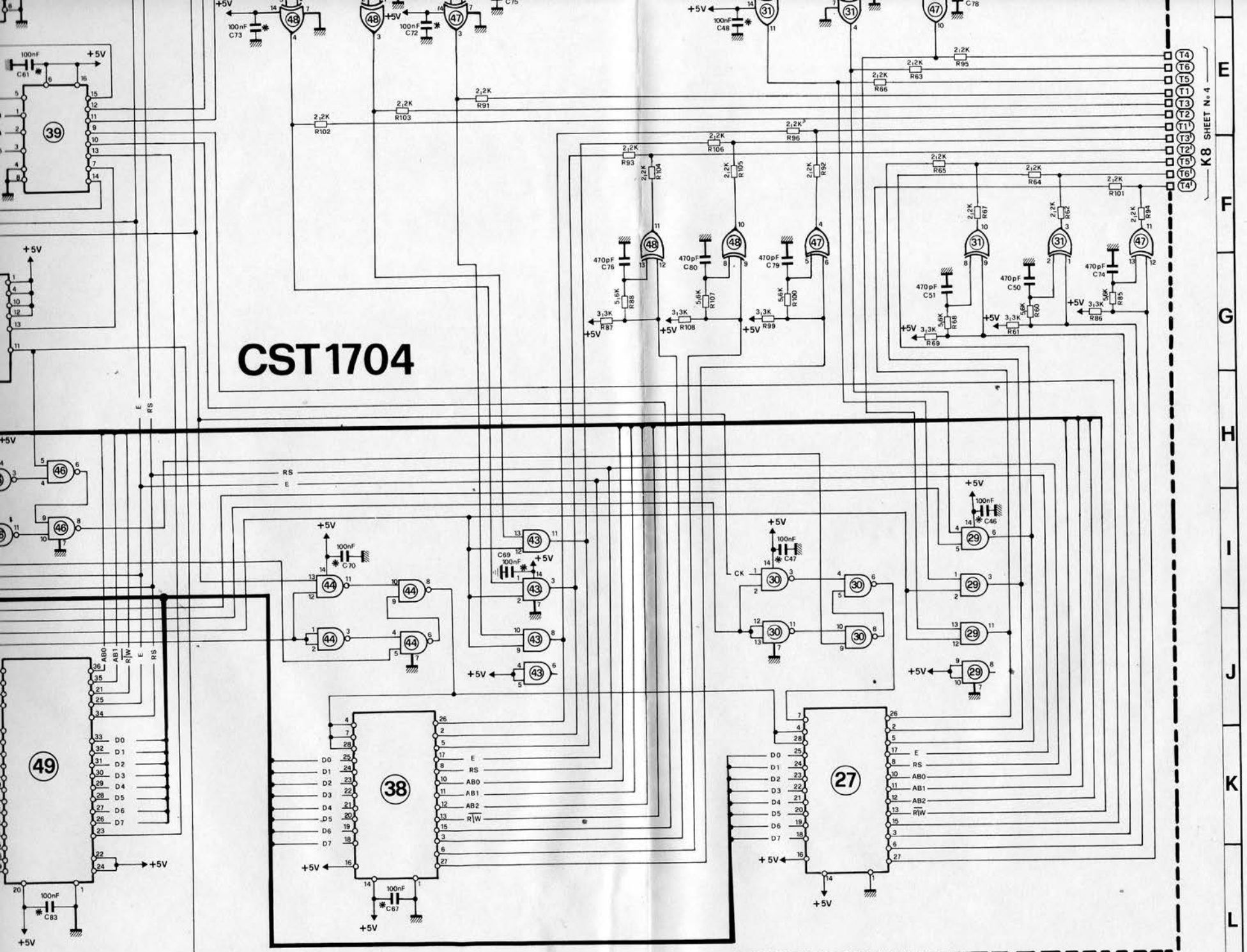

T2-T3 T10-T11	NPN	BC173B
T1	PNP	BC415B

Q1 = 8MHZ
Q2-Q3=5MHZ
Z1 = 3,9 Vz

Model : EK22
Sheet No. 3

410CST1737 (477GR17370)

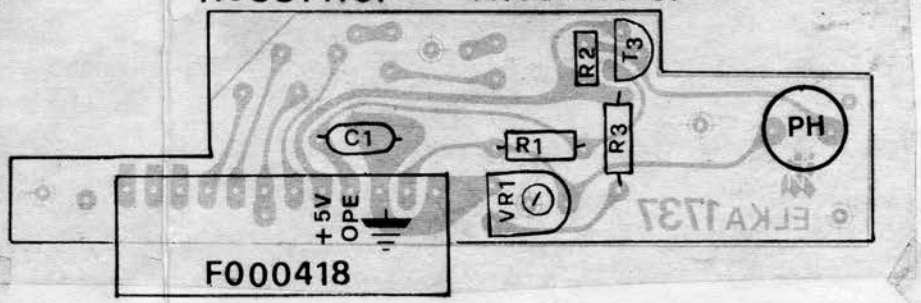

(477GR17020)
410CST1702

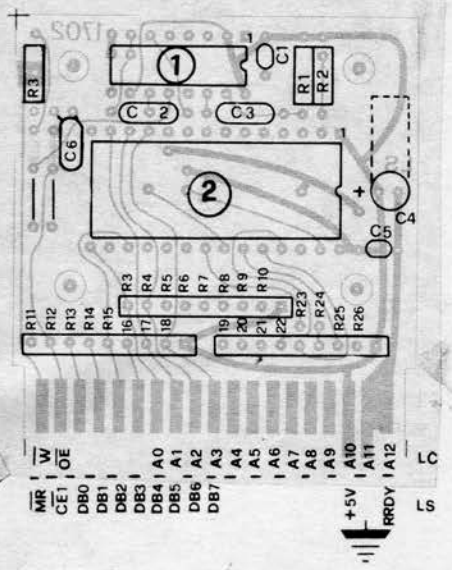

410CST1730 (477GR17300)

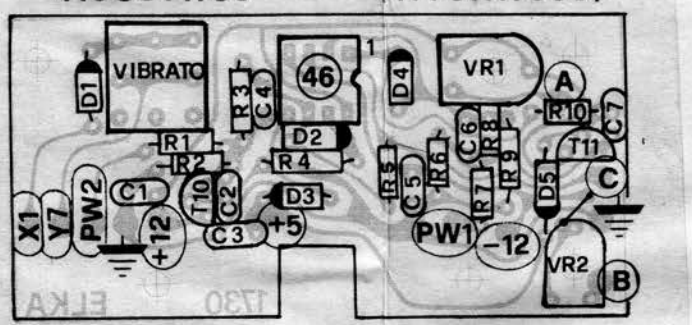

Model :	EK22
Sheet No.	3 a

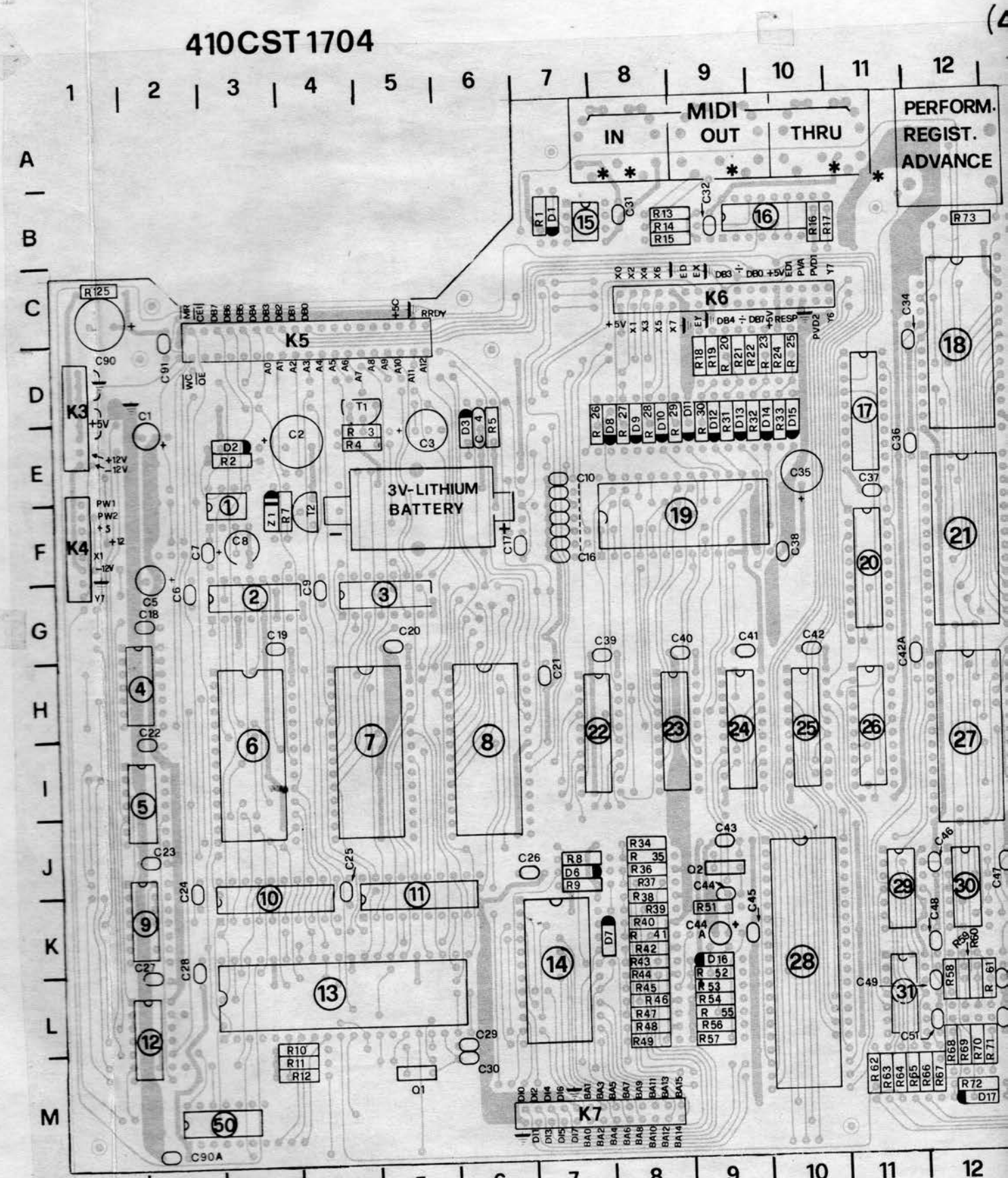
410CST1704
MIDI
IN
OUT
THRU
PERFORM.
REGIST.
ADVANCE
K5
K6
K3
K4
K7
3V-LITHIUM
BATTERY

(477GR17040)

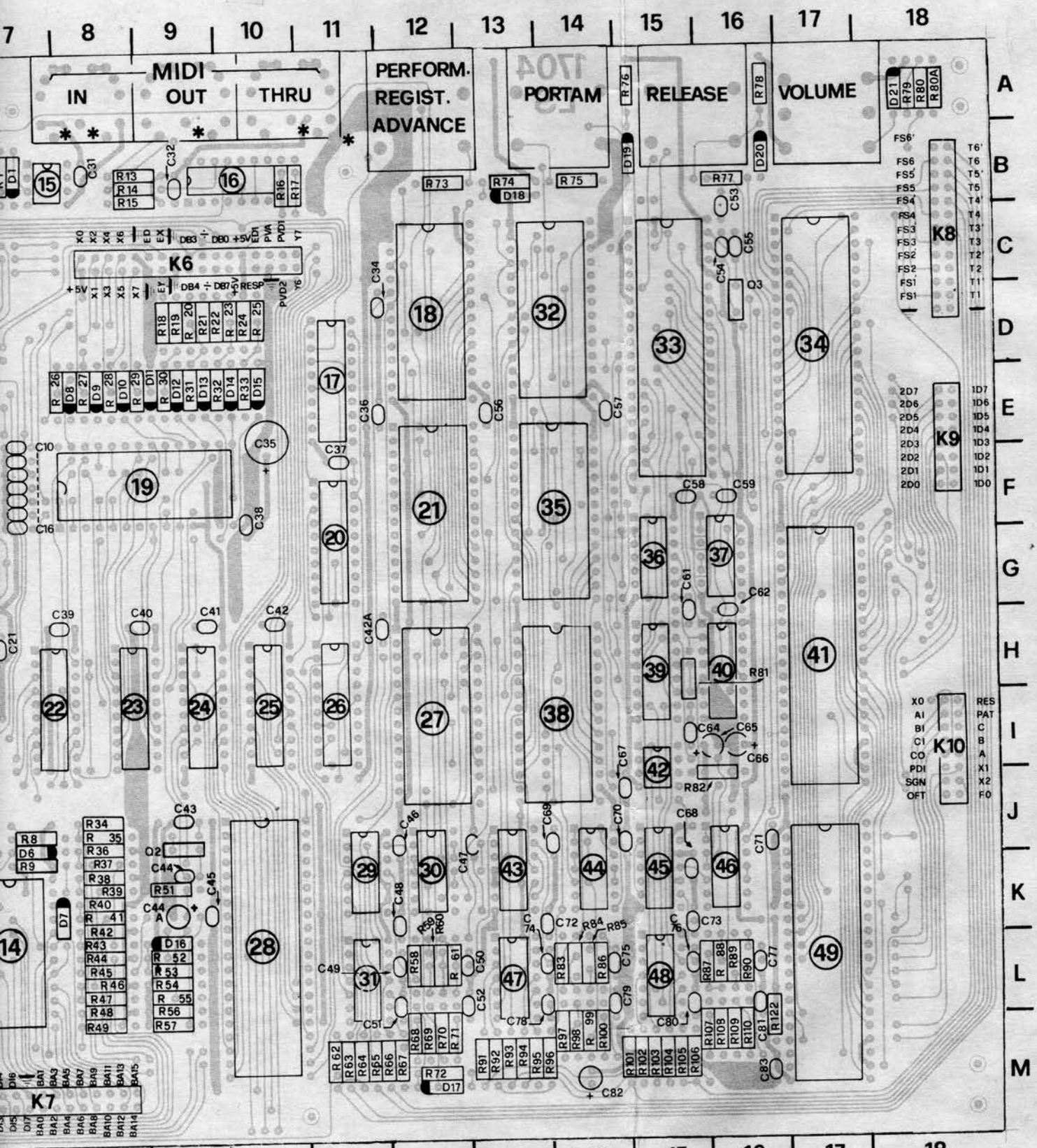
MIDI
IN
OUT
THRU
PERFORM.
REGIST.
ADVANCE
PORTAM
RELEASE
VOLUME
K6
K7
K8
K9
K10
7
8
9
10
11
12
13
14
15
16
17
18
A
B
C
D
E
F
G
H
I
J
K
L
M

COMP.	S. D.	P. B.
R1	E5	B7
R2	K12	E3
R3	J13	E4
R4	J12	E4
R5	J11	E6
R7	K12	F3
R8	D13	J7
R9	D13	K7
R10	F4	M4
R11	G4	M4
R12	K14	M4
R13	E6	B8
R14	E6	B8
R15	E7	B8
R16	E7	B10
R17	E8	B10
R18	B9	D9
R19	B9	D9
R20	B9	D9
R21	B9	D9
R22	B9	D9
R23	B9	D10
R24	B9	D10
R25	B9	D10
R26	C9	E8
R27	C9	E8
R28	C9	E8
R29	C9	E8
R30	C9	E9
R31	C9	E9
R32	C9	E9
R33	C9	E10
R34	B10	J8
R35	C11	J8
R36	B10	J8
R37	C11	K8
R38	B10	K8
R39	C11	K8
R40	B10	K8
R41	C11	K8
R42	C10	K8
R43	C11	L8
R44	B10	L8
R45	C11	L8
R46	C10	L8
R47	C11	L8
R48	C10	L8
R49	C11	L8
R51	D12	K9
R52	C12	L9
R53	D13	L9
R54	C12	L9
R55	C12	L8
R56	C12	L8
R57	C12	L8
R58	D27	L12
R59	D27	L12
R60	G29	L12
R61	G29	L12
R62	F29	M11
R63	E28	M11
R64	F29	M11
R65	F28	M11
R66	E28	M11
R67	F29	M12
R68	G28	M12
R69	G28	M12
R70	D27	M12
R71	D28	M12
R72	I17	M12
R73	H4	B12
R74	G4	B13
R75	L17	B14
R76	L17	A15
R77	H3	B16
R78	H2	A16
R79	D3	A18
R80	D3	A18
R80A	D3	A18
R81	C20	H15
R82	D21	J16
R83	D24	L14
R84	D24	L14
R85	G30	L14
R86	G30	L14
R87	G25	L16
R88	G26	L16
R89	D23	L16
R90	D24	L16
R91	E24	M13
R92	F27	M13
R93	F26	M13
R94	F30	M13
R95	E28	M13
R96	E27	M13
R97	D28	M14
R98	D28	M14
R99	G27	M14
R100	G27	M14
R101	F30	M14
R102	E23	M15
R103	E24	M15
R104	F26	M15
R105	F26	M15
R106	F26	M15
R107	G26	M16
R108	G26	M16
R109	D23	M16
R110	D23	M16
R122	K20	M16
R125	I2	C1
C1	E3	E2
C2	K11	E4
C3	J12	E5
C5	E3	G2
C6	J7	G2
C7	K12	F2
C8	K11	F3
C9	J10	G4
C10	D7	E7
C11	D7	F7
C12	D7	F7
C13	D6	F7
C14	D6	F7
C15	D6	F7
C16	D7	F7
C17	D6	F6
C18	L7	G2
C19	G10	G3
C20	G11	G5
C21	H14	H7
C22	J8	I2
C23	J6	J2
C24	G6	K2
C25	G8	K4
C26	B13	J6
C27	J8	L2

COMP.	S. D.	P. B.
C28	F4	L2
C29	H4	L6
C30	H4	M6
C31	E6	B8
C32	F7	B9
C34	H14	D11
C35	D8	E10
C36	C27	E11
C37	F14	F11
C38	D8	F10
C39	B8	H7
C40	F10	H8
C41	F11	H9
C42	F13	H10
C42A	D14	H11
C43	E10	J9
C44	E10	K9
C44A	D10	K9
C45	D12	K9
C46	I29	J12
C47	I27	J13
C48	D27	K12
C49	D27	L12
C50	G29	L12
C51	G28	L12
C52	D28	L12
C53	A21	C16
C54	B22	C16
C55	A22	C16
C56	H15	E13
C57	A23	E14
C58	I16	F15
C59	F18	F16
C61	E21	G15
C62	D19	H16
C64	I19	I15
C65	I19	I16
C66	A19	I16
C67	L24	J14
C68	G20	K15
C69	I25	J14
C70	I23	J14
C71	H20	J16
C72	E24	K13
C73	E23	K15
C74	G30	L13
C75	D25	L14
C76	G26	L15
C77	D24	L16
C78	D28	L13
C79	G27	L14
C80	G26	L15
C81	D23	L16
C82	I18	M14
C83	L21	M16
C90	J2	C1
C90A	I3	M2
C91	J2	C2
T1	J13	D4
T2	K13	F4
Q1	H4	M5
Q2	D10	J9
Q3	B21	D16
D1	F5	B7
D2	J11	E3
D3	J11	E6
D6	C3	J7
D7	C3	K7
D8	D9	E8
D9	D9	E8
D10	D9	E8
D11	D9	E9
D12	E9	E9
D13	D9	E9
D14	E9	E10
D15	E9	E10
D16	C13	K9
D17	I17	M12
D18	H4	B13
D19	L17	B15
D20	H20	B16
D21	C5	A18
D24		F2
IC1	K11	F3
IC2	I6	G3
IC3	J9	G5
IC4	L8	H2
IC5	J7	I2
IC6	G9	I3
IC7	G11	I4
IC8	G12	I6
IC9	I11	K2
IC10	G6	K3
IC11	G7	K5
IC12	I7	L2
IC13	H5	L4
IC14	B12	L7
IC15	E6	B7
IC16	E7	B10
IC17	I14	E11
IC18	B27	D12
IC19	C7	F9
IC20	G14	G11
IC21	G16	F12
IC22	B7	I7
IC23	F9	I8
IC24	F11	I9
IC25	F12	I10
IC26	E14	I11
IC27	K27	I12
IC28	D11	K10
IC29	I29	K11
IC30	I27	K12
IC31	F30	L11
IC32	B23	D14
IC33	B21	D15
IC34	K18	D17
IC35	E16	F14
IC36	I16	G15
IC37	F18	G16
IC38	K24	I14
IC39	E21	H15
IC40	D20	H16
IC41	B18	H17
IC42	I19	I15
IC43	I25	K13
IC44	I24	K14
IC45	G20	K15
IC46	H21	K16
IC47	D28	L13
IC48	D23	L15
IC49	K21	L17
IC50	I4	M2
LITHIUM BATTERY 3V	J11	F5
Z1	K12	F3

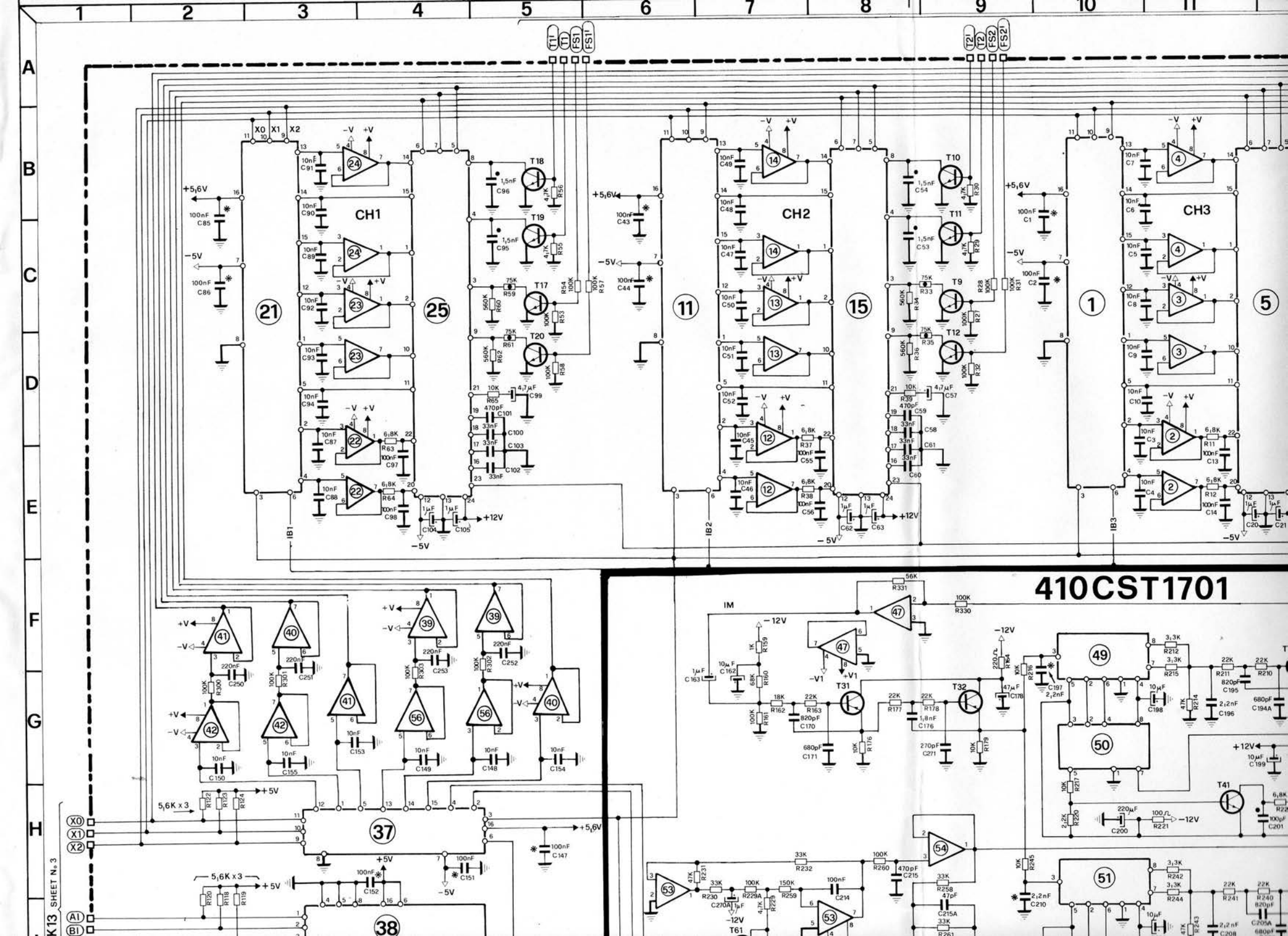

410CST1701
CH1
CH2
CH3
T1'
T1
FS1
FS1'
T2'
T2
FS2
FS2'
X0
X1
X2
IB1
IB2
IB3
IM
+5,6V
-5V
+12V
-12V
+5V
-V1
+V1
5,6K x 3
K13 SHEET No 3

410CST1701

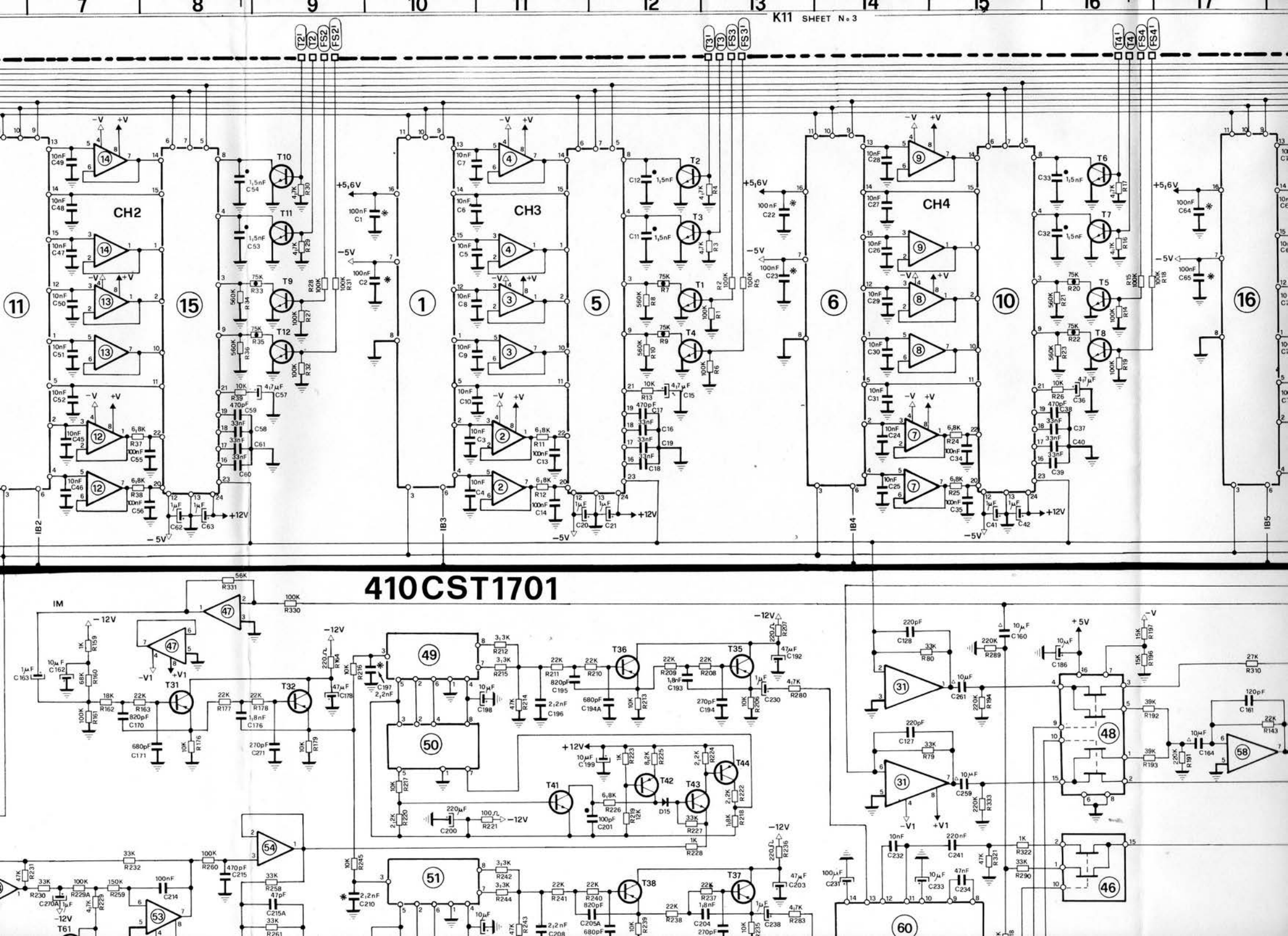

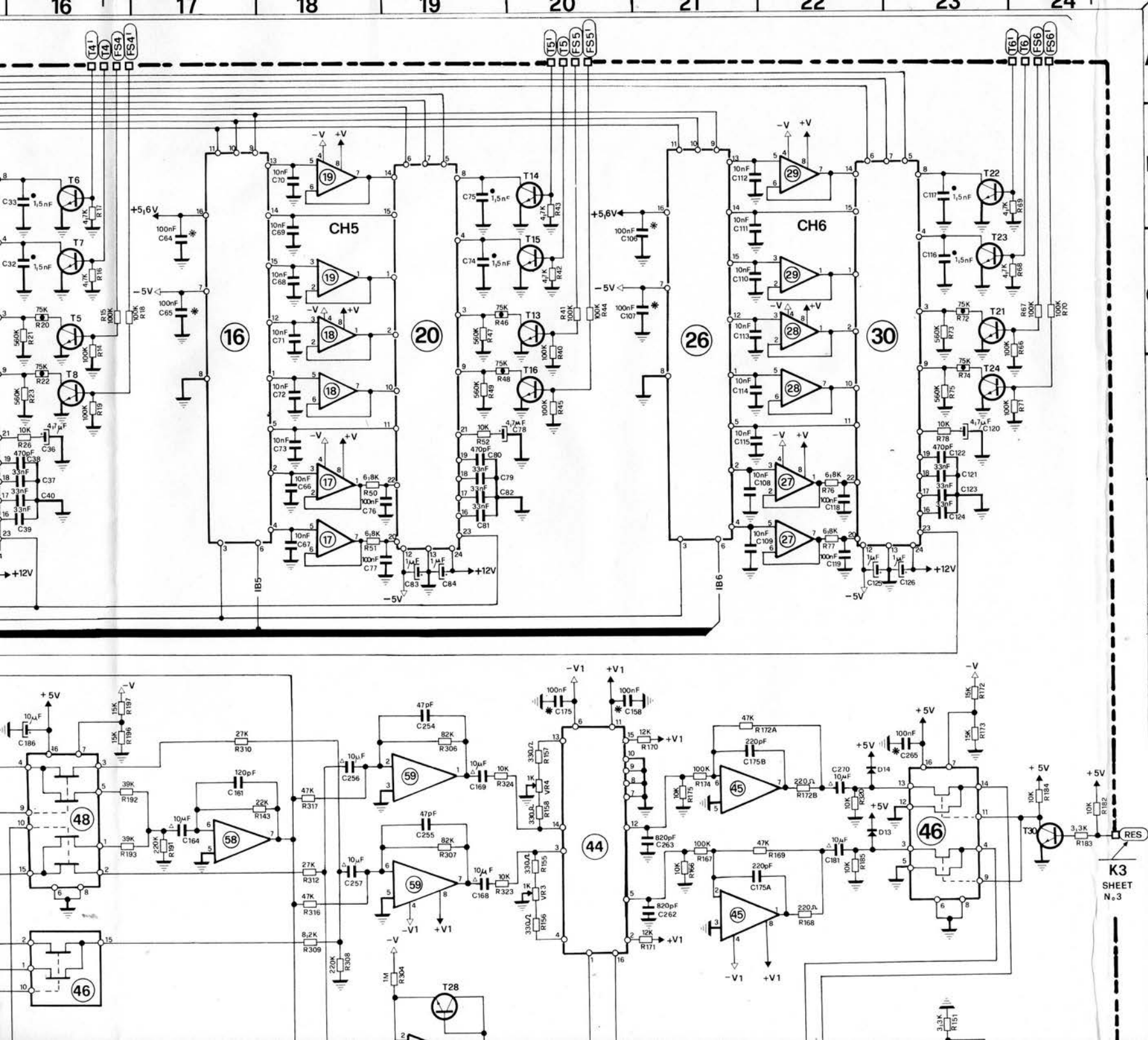

I. C.		
CODE	TYPE	MANUF.
1-6-11-16-21-26-37	4051	
2÷4-7÷9-12÷14 17÷19-22÷24 27÷29-39÷42 56-57	TL062	
5-10-15-20 25-30	3396	
32-33	DAC0808	
44	13600	
47-45-53÷55-31 34-36-58-59	TL082	
48-46	4053	
49-51	MN3009	
50-52	MN 3101	
60	DNR1894	
35	LM 393	
38	74HC138	
43	LM386N	

CODE	TYPE	TRANS.
T1÷T24-T26÷T30 T41÷T43 T46-T48-T61	NPN	BC173B
T25-T31-T32 T35÷T40-T42-T44 T47-T49	PNP	BC415C

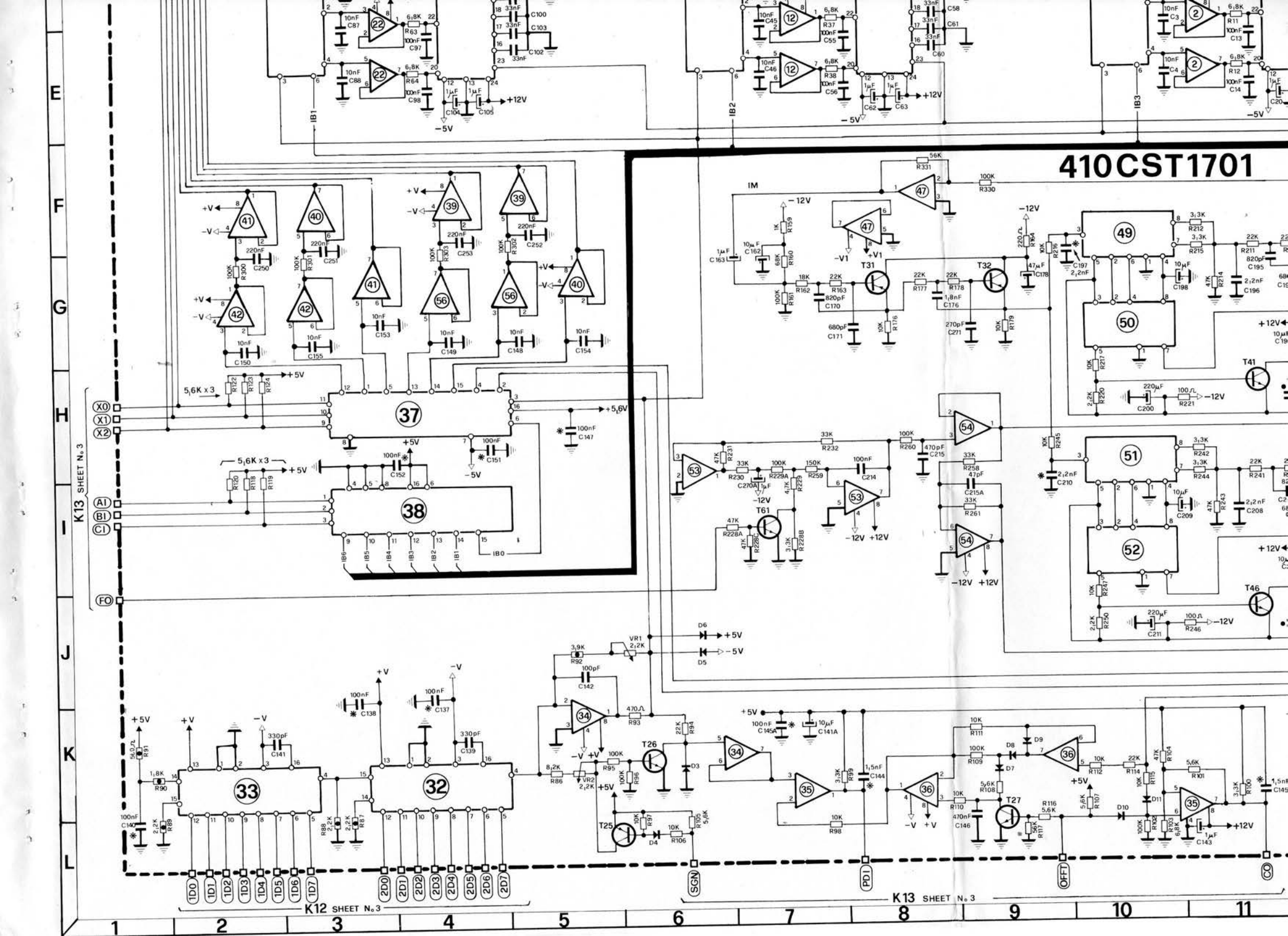
410CST1701
K13 SHEET No 3
K12 SHEET No 3
K13 SHEET No 3
X0
X1
X2
AI
BI
CI
FO
IB1
IB2
IB3
IB0
IB6
IB5
IB4
IB3
IB2
IB1
IM
+12V
-12V
+5V
-5V
+V
-V
5,6K x 3
+5,6V
1D0
1D1
1D2
1D3
1D4
1D5
1D6
1D7
2D0
2D1
2D2
2D3
2D4
2D5
2D6
2D7
SGN
PDI
OFFT
CO
T31
T32
T41
T46
T61
T25
T26
T27
VR1
VR2
D3
D4
D5
D6
D7
D8
D9
D10
D11
1
2
3
4
5
6
7
8
9
10
11
E
F
G
H
I
J
K
L

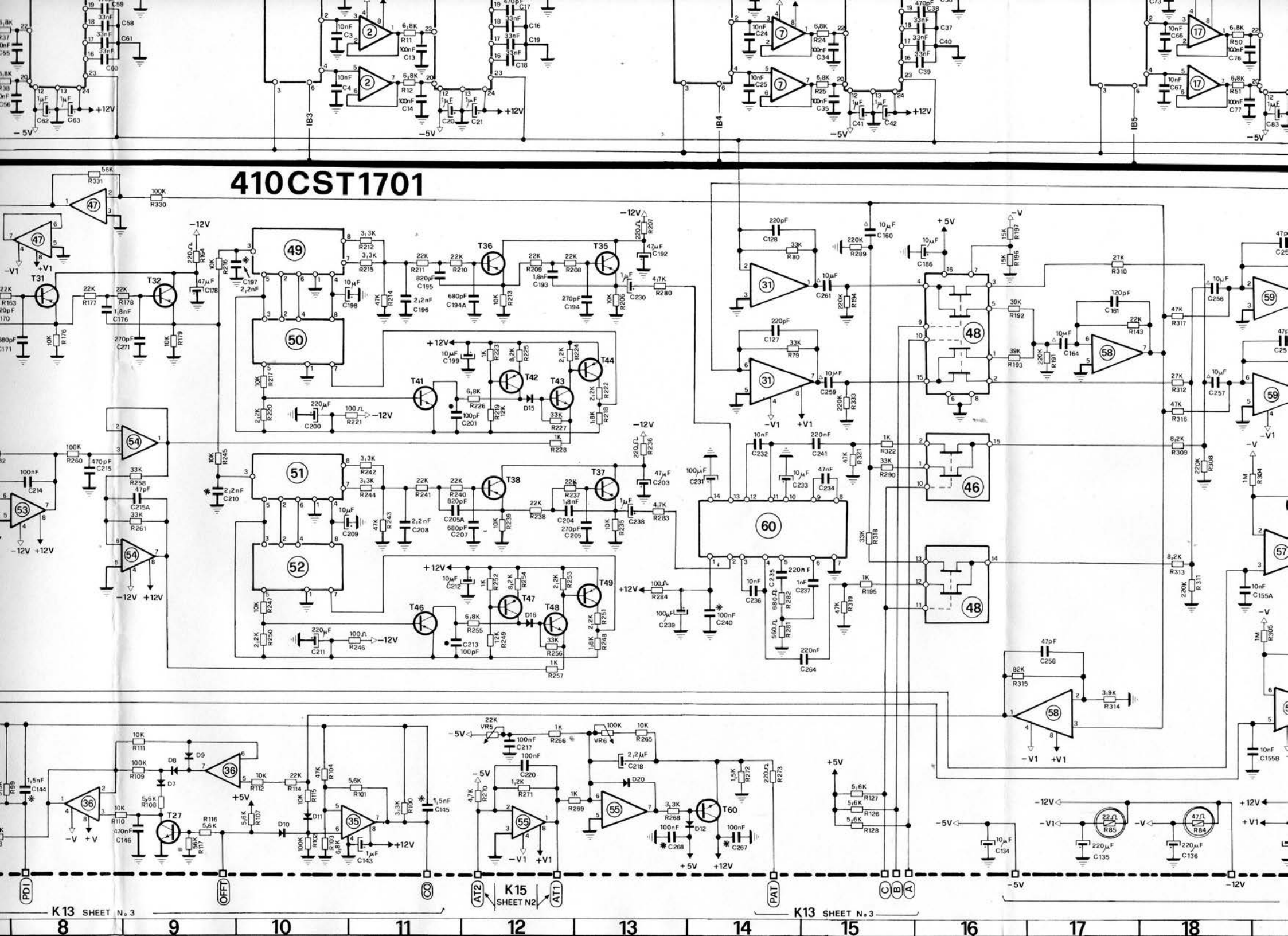
410CST1701
K13 SHEET No 3
K15 SHEET N2
K13 SHEET No 3
8
9
10
11
12
13
14
15
16
17
18

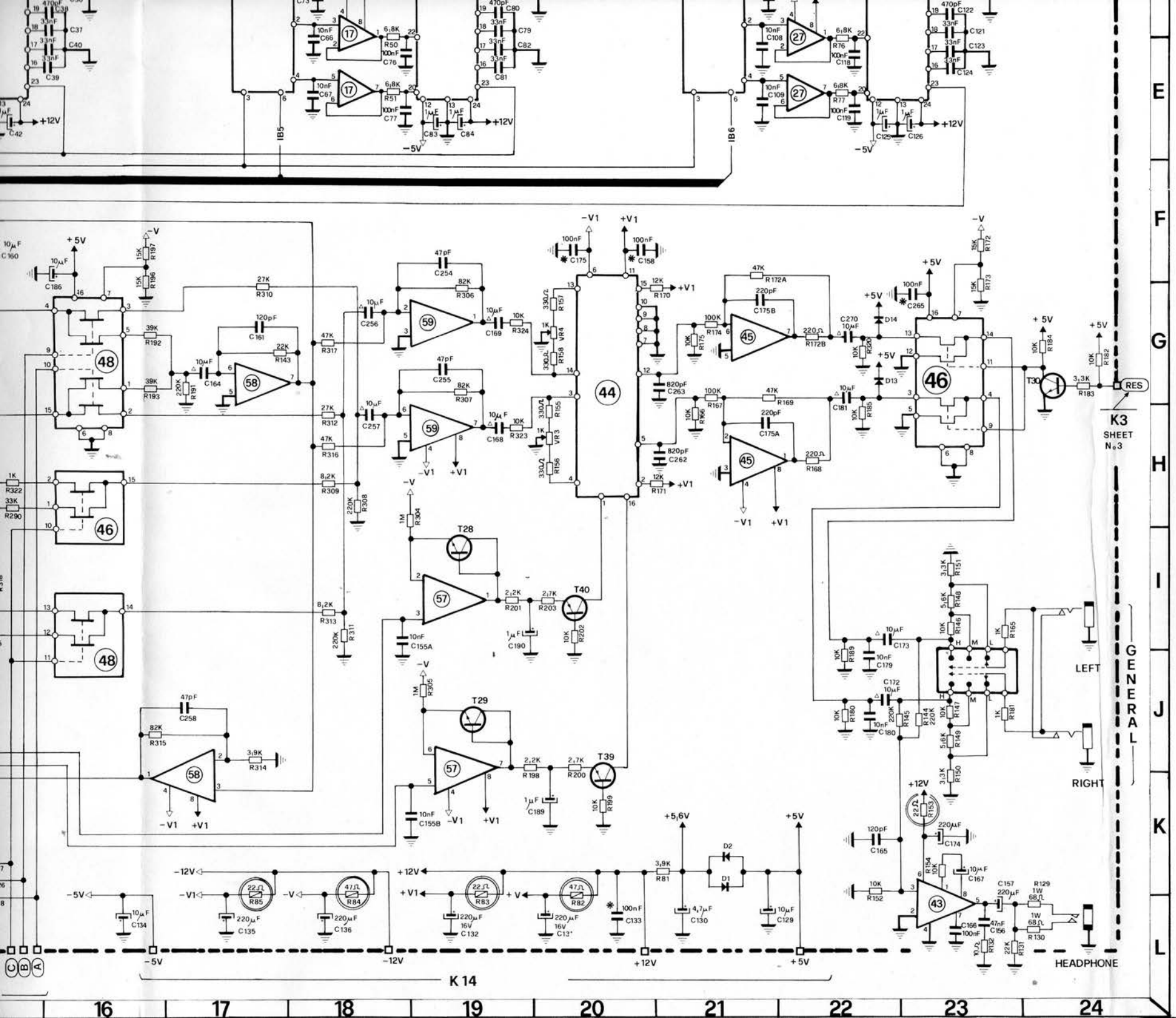

26 - 37	4051
2÷4-7÷9-12÷14 17÷19-22÷24 27÷29-39÷42 56 - 57	TL062
5 - 10 - 15 - 20 25 - 30	3396
32 - 33	DAC0808
44	13600
47-45-53÷55-31 34-36-58-59	TL082
48-46	4053
49 - 51	MN3009
50 - 52	MN 3101
60	DNR1894
35	LM 393
38	74HC138
43	LM386N

CODE	TYPE	TRANS.
T1÷T24-T26÷T30 T41÷T43 T46÷T48 - T61	NPN	BC173B
T25-T31 - T32 T35÷T40-T42-T44 T47 - T49	PNP	BC415C

Model :	EK 22
Sheet	No 4

410CST1701

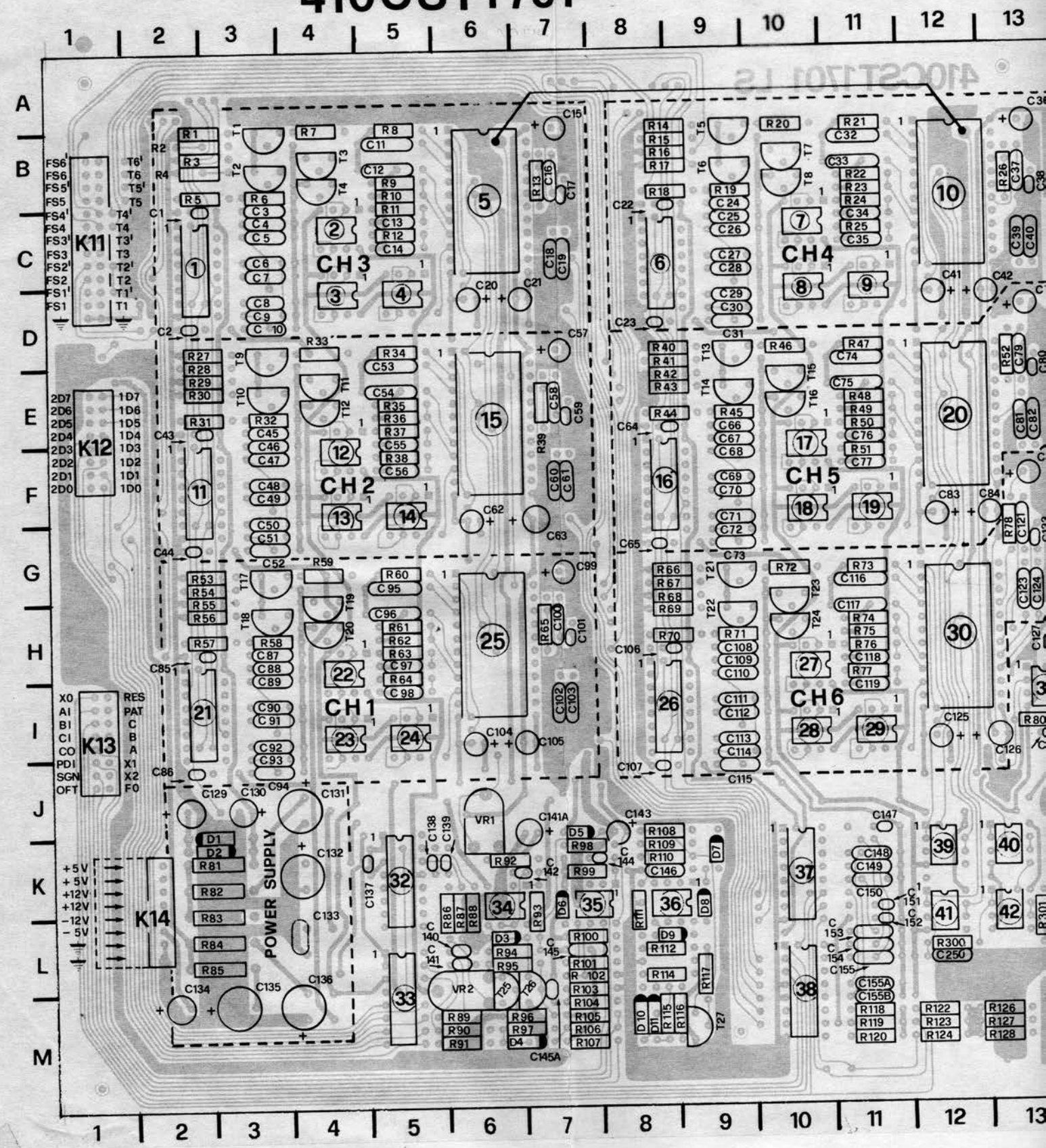

Model : EK22

Sheet No. 4a

(477GR17010)

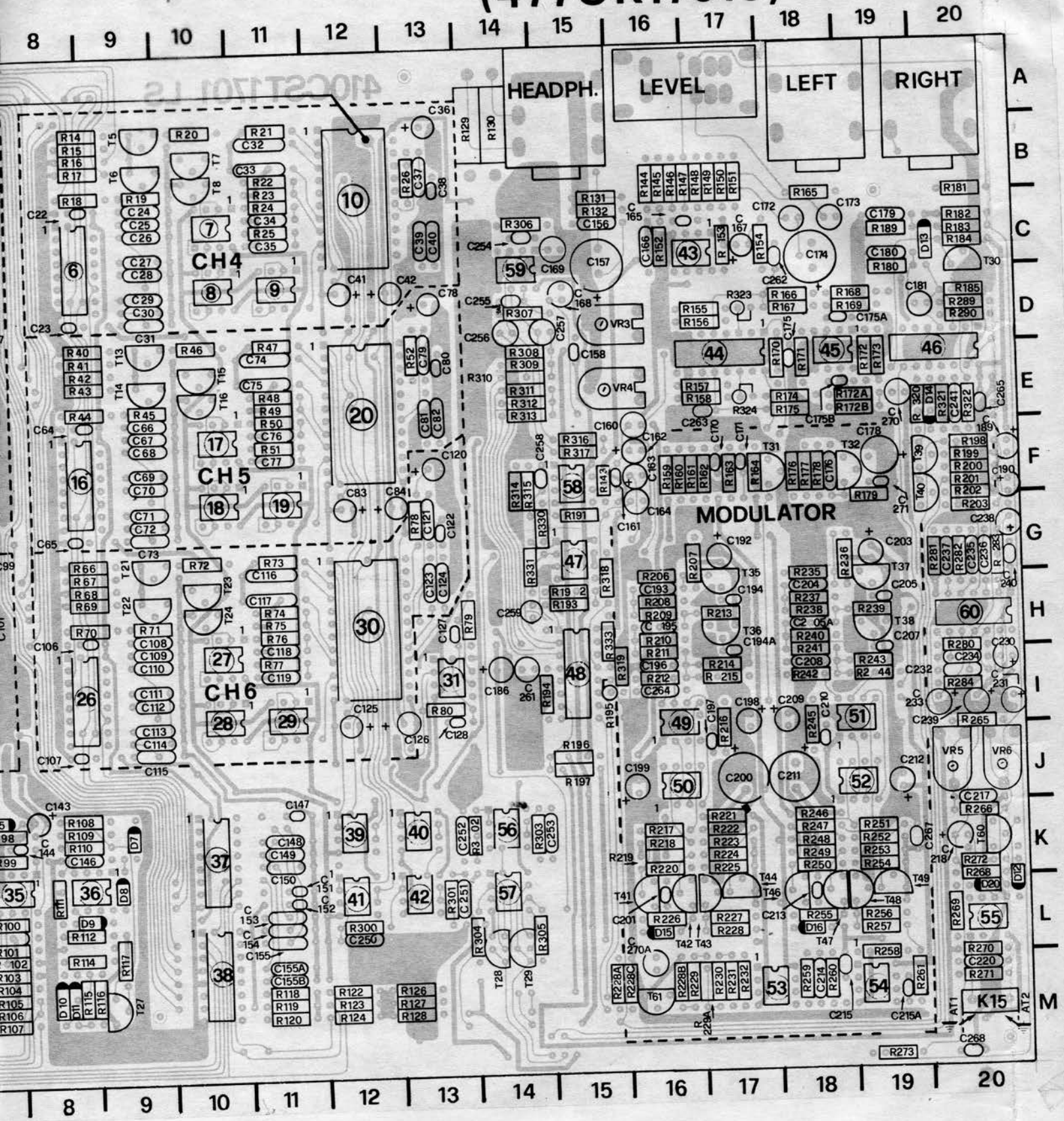

Model :	EK22
Sheet No.	4a

R1	C13	A2
R2	C13	B2
R3	C13	B2
R4	B13	B2
R5	C13	B2
R6	D13	B3
R7	C12	A4
R8	C12	A5
R9	D12	B5
R10	D12	B5
R11	E11	B5
R12	E11	C5
R13	D12	B7
R14	C16	A8
R15	C16	B8
R16	C16	B8
R17	B16	B8
R18	C16	B8
R19	D16	B9
R20	C16	A10
R21	C16	A11
R22	D16	B11
R23	D16	B11
R24	E15	B11
R25	E15	C11
R26	D16	B13
R27	C9	D2
R28	C9	E2
R29	C9	E2
R30	B9	E2
R31	C9	E2
R32	D9	E3
R33	C9	D4
R34	C8	D5
R35	D9	E5
R36	D8	E5
R37	D7	E5
R38	E7	F5
R39	D8	E7
R40	C20	D8
R41	C20	E8
R42	C20	E8
R43	B20	E8
R44	C20	E8
R45	D20	E9
R46	C19	D10
R47	C19	D11
R48	D19	E11
R49	D19	E11
R50	D18	E11
R51	E18	F11
R52	D19	D13
R53	C5	G2
R54	C5	G2
R55	C5	H2
R56	B5	H2
R57	C6	H2
R58	D5	H3
R59	C5	G4
R60	C5	G5
R61	D5	H5
R62	D5	H5
R63	D4	H5
R64	E4	H5
R65	D5	H7
R66	C23	G8
R67	C24	G8
R68	C23	G8
R69	B23	H8
R70	C24	H8
R71	D23	H9
R72	C23	G10
R73	C23	G11
R74	D23	H11
R75	D23	H11
R76	E22	H11
R77	E22	I11
R78	D23	G13
R79	G14	H13
R80	F14	I13
R81	K21	K2
R82	K20	K2
R83	K19	K2
R84	K18	L2
R85	K17	L2
R86	K5	L6
R87	L3	L6
R88	L3	L6
R89	L1	M6
R90	K1	M6
R91	K1	M6
R92	J5	K6
R93	K6	L7
R94	K6	L6
R95	K5	L6
R96	K6	M6
R97	L6	M6
R98	L7	K7
R99	K7	K7
R100	K11	L7
R101	K11	L7
R102	L10	L7
R103	L10	M7
R104	K10	M7
R105	L6	M7
R106	L6	M7
R107	K10	M7
R108	K9	K8
R109	K9	K8
R110	K8	K8
R111	K9	L8
R112	K10	L8
R114	K10	L8
R115	K10	M8
R116	L9	M8
R117	L9	L9
R118	I2	M11
R119	I2	M11
R120	I2	M11
R122	H2	M12
R123	H2	M12
R124	H2	M12
R126	K15	M13
R127	K15	M13
R128	K15	M13
R129	L24	A14
R130	L24	A14
R131	L23	B15
R132	L23	C15
R143	G17	F15
R144	J23	B16
R145	J22	B16
R146	I23	B16
R147	J23	B17
R148	I23	B17
R149	J23	B17
R150	K23	B17
R151	I23	B17
R152	K22	C16
R153	K23	C17
R154	K23	C18
R155	H20	D17
R156	H20	D17
R157	G20	E17
R158	G20	E17
R159	F7	F16
R160	G7	F16
R161	G7	F16
R162	G7	F17
R163	G7	F17
R164	F9	F17
R165	I23	B18
R166	H21	D18
R167	G21	D18
R168	H22	D19
R169	G21	D19
R170	G21	E18
R171	H21	E18
R172	F23	E19
R172A	F21	E19
R172B	G22	E19
R173	G23	E19
R174	G21	E18
R175	G21	E18
R176	G8	F18
R177	G8	F18
R178	G9	F18
R179	G9	G19
R180	J22	C19
R181	J23	B20
R182	G24	C20
R183	G24	C20
R184	G24	C20
R185	H22	D20
R189	J22	C19
R191	G17	G15
R192	G16	H15
R193	G16	H15
R194	G15	I14
R195	I15	I15
R196	F16	J15
R197	F16	J15
R198	J19	F20
R199	K20	F20
R200	J20	F20
R201	I19	F20
R202	I20	G20
R203	I20	G20
R206	G13	G16
R207	F13	G16
R208	F12	H16
R209	F12	H16
R210	F11	H16
R211	F11	I16
R212	F11	I16
R213	G12	H17
R214	G11	I17
R215	G11	I17
R216	F9	I17
R217	H10	K16
R218	H13	K16
R219	H12	K16
R220	H10	K16
R221	H11	K17
R222	H13	K17
R223	G12	K17
R224	G12	K17
R225	G12	K17
R226	H12	L16
R227	H12	L17
R228	H12	L17
R228A	I7	M15
R228B	I7	M16
R228C	I7	M15
R229	I7	M16
R229A	H7	M16
R230	H7	M17
R231	H6	M17
R232	H7	M17
R235	I13	G18
R236	H13	G18
R237	I12	H18
R238	I12	H18
R239	I12	H19
R240	H11	H18
R241	H11	I18
R242	H11	I18
R243	I11	I19
R244	H11	I19
R245	H9	I18
R246	J11	K18
R247	J10	K18
R248	J13	K18
R249	J12	K18
R250	J10	K18
R251	J13	K19
R252	I12	K19
R253	I12	K19
R254	I12	K19
R255	J12	L18
R256	J12	L19
R257	J12	L19
R258	H9	L19
R259	H7	M18
R260	H8	M18
R261	I9	M19
R265	K13	I20
R266	K12	K20
R268	K13	K20
R269	K13	L20
R270	K12	L20
R271	K12	M20
R272	K14	K20
R273	K14	M19
R280	G13	I20
R281	J14	G20
R282	I14	G20
R283	I13	G20
R284	I13	I20
R289	F15	D20
R290	H15	D20
R300	G2	L12
R301	G3	L13
R302	F5	K14
R303	F4	K14
R304	H19	L13
R305	J19	L14
R306	G19	C14
R307	G19	D14
R308	H18	E14
R309	H18	E14
R310	F17	E14
R311	I18	E14
R312	H18	E14
R313	I18	E14
R314	J17	F14
R315	J16	F14
R316	H18	F15
R317	G18	F15
R318	I15	G15
R319	J15	I15
R320	G22	E19
R321	H15	E20
R322	H15	E20
R323	H19	D17
R324	G19	E17
R330	F9	G14
R331	F8	G14
R333	H15	H15
C1	B10	C2
C2	C10	D2
C3	E10	C3
C4	E10	C3
C5	C10	C3
C6	B10	C3
C7	B10	C3
C8	C10	D3
C9	D10	D3
C10	D10	D3
C11	C12	B5
C12	B12	B5
C13	E11	C5
C14	E11	C5
C15	D12	A7
C16	D12	B7
C17	D12	B7
C18	E12	C7
C19	E12	C7
C20	E11	D6
C21	E12	D7
C22	B13	C8
C23	C13	D8
C24	E14	C9
C25	E14	C9
C26	C14	C9
C27	B14	C9
C28	B14	C9
C29	C14	D9
C30	D14	D9
C31	D14	D9
C32	C16	B11
C33	B16	B11
C34	E15	C11
C35	E15	C11
C36	D16	A13
C37	D16	B13
C38	D16	B13
C39	E16	C13
C40	E16	C13
C41	E15	D12
C42	E15	D13
C43	B6	E2
C44	C6	G2
C45	E7	E3
C46	E7	E3
C47	C7	F3
C48	B7	F3
C49	B7	F3
C50	C7	G3
C51	D7	G3
C52	D7	G3
C53	C8	E5
C54	B8	E5
C55	E8	E5
C56	E8	F5
C57	D9	D7
C58	D8	E7
C59	D8	E7
C60	E8	F7
C61	E8	F7
C62	E8	F6
C63	E8	F7
C64	B17	E8
C65	C17	G8
C66	E18	E9
C67	E18	E9
C68	C18	F9
C69	B18	F9
C70	B18	F9
C71	C18	G9
C72	D18	G9
C73	D18	G9
C74	C19	E11
C75	B19	E11
C76	E18	E11
C77	E18	F11
C78	D19	D13
C79	D19	E13
C80	D19	E13
C81	E19	E13
C82	E19	E13
C83	E19	F12
C84	E19	F13
C85	B2	H2
C86	C2	J2
C87	E3	H3
C88	E3	H3
C89	C3	I3
C90	B3	I3
C91	B3	I3
C92	C3	I3
C93	D3	J3
C94	D3	J3
C95	C5	G5
C96	B5	H5
C97	E4	H5
C98	E4	I5
C99	D5	G7
C100	D5	H7
C101	D5	H7
C102	E5	I7
C103	E5	I7
C104	E4	I6
C105	E4	I7
C106	B21	H8
C107	C21	J8
C108	E21	H9
C109	E21	H9
C110	C21	I9
C111	B21	I9
C112	B21	I9
C113	C21	I9
C114	D21	J9
C115	D21	J9
C116	C23	G11
C117	B23	H11
C118	E22	H11
C119	E22	I11
C120	D23	F13
C121	D23	G13
C122	D23	G13
C123	E23	G13
C124	E23	G13
C125	E22	I12
C126	E23	I13
C127	G14	H13
C128	F14	I13
C129	L21	J2
C130	L21	J3
C131	L20	J4
C132	L19	K4
C133	L20	L4
C134	L16	M2
C135	L17	M3
C136	L18	M4
C137	J4	K4
C138	J3	K5
C139	K4	K5
C140	L1	L6
C141	K2	L6
C141A	K7	J7
C142	J5	K6
C143	L11	J8
C144	K8	K7
C145	K11	L7
C145A	K7	M7
C146	L9	K8
C147	H5	J11
C148	G5	K11
C149	G4	K11
C150	G2	K11
C151	H4	K11
C152	H4	L11
C153	G3	L11
C154	G5	L11
C155	G3	L11
C155A	I18	M11
C155B	I19	M11
C156	L23	C15
C157	L23	C15
C158	F20	E15
C160	F15	E16
C161	G17	F15
C162	G7	F16
C163	G7	F16
C164	G17	F16
C165	K22	C16
C166	L23	C16
C167	K23	C17
C168	H19	D15
C169	G19	C15
C170	G7	F17
C171	G8	F17
C172	J22	C18
C173	I22	C18
C174	K23	C18
C175	F20	E18
C175A	H21	D18
C175B	G21	E18
C176	G8	F18
C178	G9	F19
C179	J22	C19
C180	J22	C19
C181	G22	D20
C186	F16	I14
C189	K20	F20
C190	I19	F20
C192	F13	G17
C193	G12	H16
C194	G13	H17
C194A	G12	I17
C195	G11	H16
C196	G11	I16
C197	F10	J17
C198	G10	I17
C199	G12	J16
C200	H10	J17
C201	H11	L16
C203	H13	G19
C204	I12	H18
C205	I13	H19
C205A	I11	H18
C207	I12	I19
C208	I11	I18
C209	I10	I18
C210	I9	J18
C211	J10	J18
C212	I12	J19
C213	J11	L18
C214	H8	M18
C215	H8	M18
C215A	I9	M19
C217	K12	J20
C218	K13	K20
C220	K12	M20
C230	G13	I20
C231	H14	I20
C232	H14	I20
C233	H14	I20
C234	H15	I20
C235	J14	G20
C236	I14	G20
C237	I15	G20
C238	I13	G20
C239	J13	I20
C240	J14	G20
C241	H15	E20
C250	F2	L12
C251	F3	L13
C252	F5	K13
C253	F4	K14
C254	F19	C14
C255	G19	D14
C256	G18	D14
C257	H18	D15
C258	J17	F14
C259	H15	H14
C261	G15	I14
C262	H21	C18
C263	G21	E17
C264	J15	I16
C265	G23	E20
C266	K14	K20
C267	L14	K19
C268	L13	M20
C270	G22	E19
C270A	I7	M16
C271	G9	F19
D1	K21	J2
D2	K21	K3
D3	K6	L6
D4	L6	M6
D5	J6	K7
D6	J6	K7
D7	K9	K9
D8	K9	K9
D9	K9	L8
D10	L10	M8
D11	K10	M8
D12	K14	L20
D13	G22	C20
D14	G22	E20
D15	H12	L16
D16	J12	L18
D20	K13	L20
VR1	J6	J7
VR2	K5	M6
VR3	H20	D15
VR4	G20	E15
VR5	K12	J20
VR6	K13	J20
T1	C12	B3
T2	B12	B3
T3	C12	B4
T4	D12	B4
T5	C16	B9
T6	B16	B9
T7	C16	B10
T8	D16	B10
T9	C9	D3
T10	D9	E3
T11	C9	E4
T12	D9	E4
T13	C20	D9
T14	B20	E9
T15	C20	E10
T16	D20	E10
T17	C5	G3
T18	B5	H3
T19	C5	H4
T20	D5	H4
T21	C23	G9
T22	B23	H9
T23	C23	H10
T24	D23	H10
T25	L6	M6
T26	K6	M7
T27	L9	M9
T28	I19	L14
T29	J19	L14
T30	G24	C20
T31	G8	F18
T32	G9	F19
T35	F13	H17
T36	F12	H17
T37	H13	H19
T38	H12	H19
T39	K20	F20
T40	I20	F20
T41	H11	L16
T42	H12	L16
T43	H12	L17
T44	G13	L17
T46	J11	L18
T47	J12	L18
T48	J12	L19
T49	I13	L19
T60	K14	K20
T61	I7	M16
IC1	C10	C2
IC2	E11	C4
IC3	D11	D4
IC4	B11	D5
IC5	C12	B6
IC6	C14	C8
IC7	E14	C10
IC8	D14	D10
IC9	B14	D11
IC10	C15	B12
IC11	C6	F2
IC12	E7	F4
IC13	C7	F4
IC14	B7	F5
IC15	C8	E6
IC16	C17	F8
IC17	E18	F10
IC18	D18	F10
IC19	B18	F11
IC20	C19	E12
IC21	C3	I2
IC22	E3	H4
IC23	C3	I4
IC24	B3	I5
IC25	C4	H6
IC26	C21	I8
IC27	E22	H10
IC28	D22	I10
IC29	B22	I11
IC30	C22	H12
IC31	G14	I13
IC32	K4	K5
IC33	K2	M5
IC34	K5	K6
IC35	K7	K7
IC36	K8	K8
IC37	H4	K10
IC38	I4	M10
IC39	F4	K12
IC40	F3	K13
IC41	F2	L12
IC42	G2	L13
IC43	L23	C17
IC44	G20	E17
IC45	H21	E18
IC46	H16	E20
IC47	F8	G15
IC48	G16	I15
IC49	F10	I16
IC50	G10	J16
IC51	H10	I19
IC52	I10	J19
IC53	I8	M17
IC54	I9	M19
IC55	K13	L20
IC56	G4	K14
IC57	I19	L14
IC58	G17	F15
IC59	G19	C14
IC60	I14	H20

Model : EK22

Sheet No. 4a

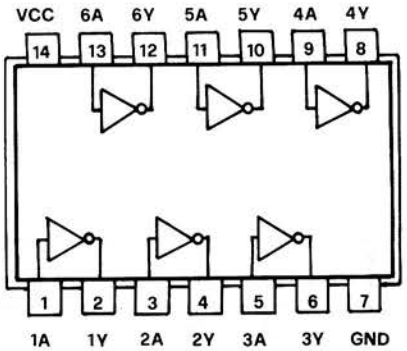

7404-74S04-74LS04

HEX INVERTERS

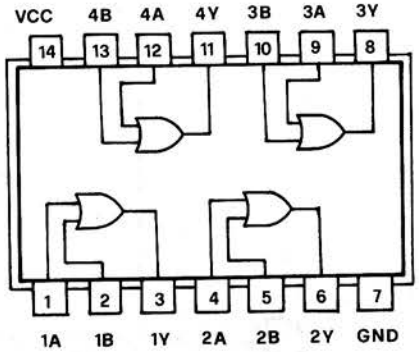

74S32

QUADRUPLE POSITIVE-OR

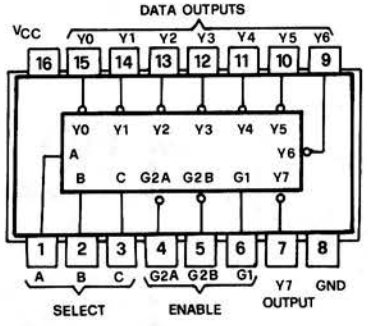

74LS138N-74S138 74HC138

3-TO-8 LINE DECODERS/MULTIPLEXERS

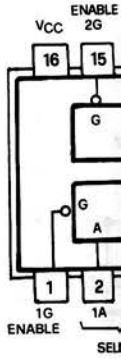

DUAL 2

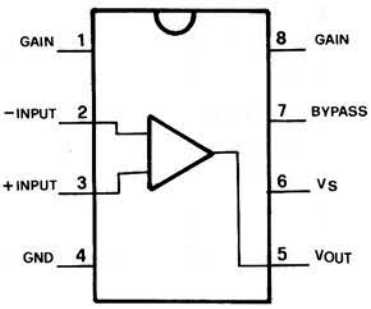

LM386

LOW VOLTAGE AUDIO POWER AMPLIFIER

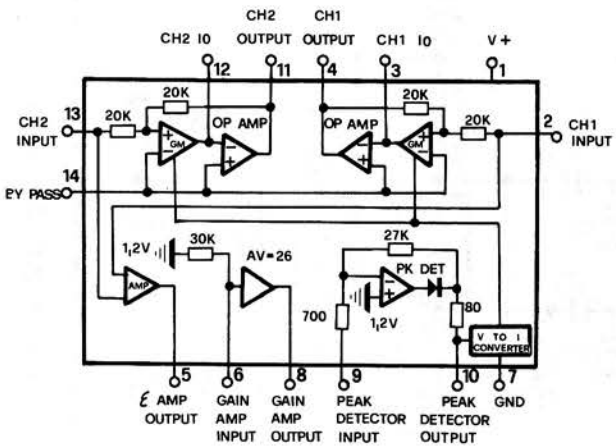

LM1894

DINAMIC NOISE REDUCTION SYSTEM DNR™

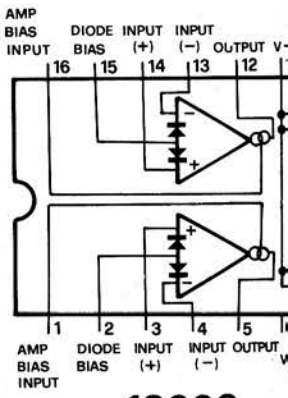

13600

DUAL OPERATIONAL TRANS-
AMPLIFIERS WITH LINEARIZ
AND BUFFERS

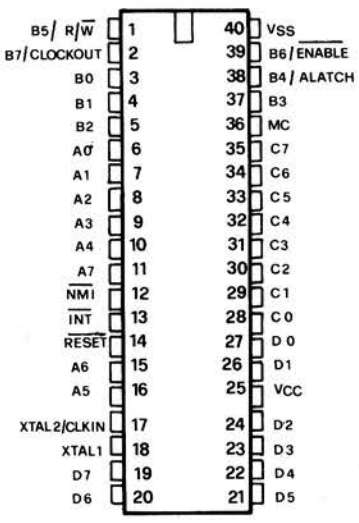

TMS7001

8-BIT MICROCOMPUTER

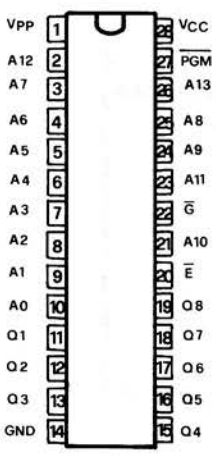

27128

16K x 8 BYTES EPROM

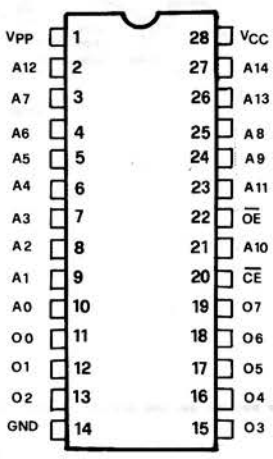

27256

256K (32K x 8) UV ERASABLE PROM

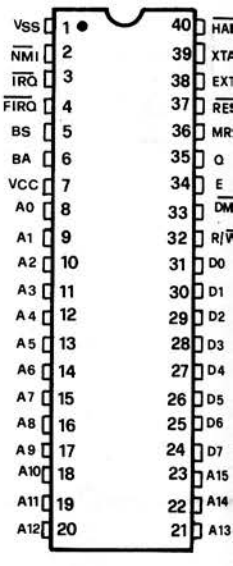

68B09

8-BIT MICROPROCESSO

Model	EK22 - EK44
Sheet N°	

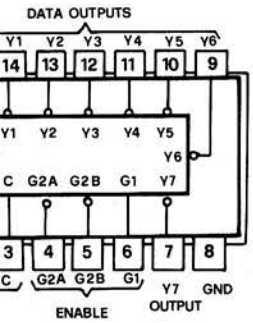

S138N-74S138
74HC138
E DECODERS/MULTIPLEXERS

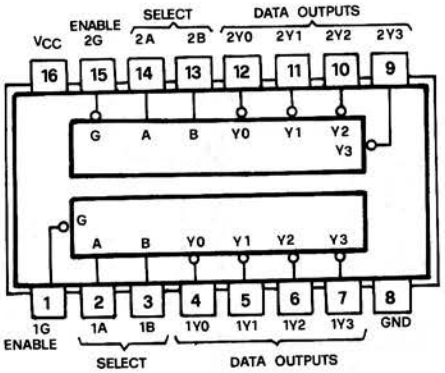

74LS139
DUAL 2-TO-4 LINE DECODERS/ MULTIPLEXERS

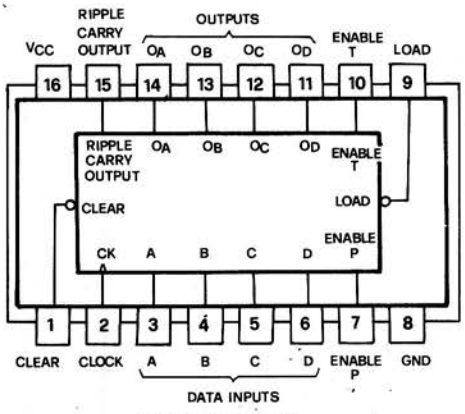

74 LS161
SYNCHRONOUS 4 BIT CONTERS

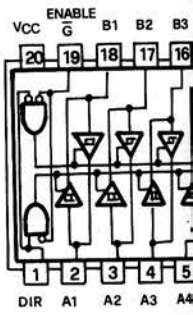

74L
OCTAL BUS

CH1 INPUT

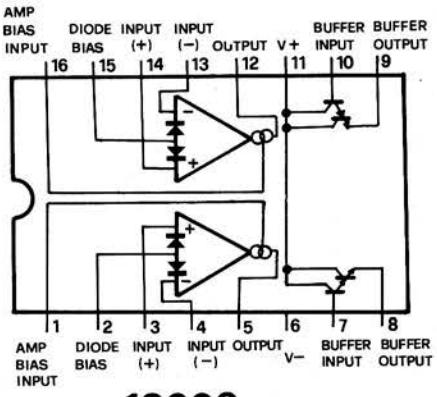

13600
DUAL OPERATIONAL TRANSCONDUTTANCE AMPLIFIERS WITH LINEARIZING DIODES AND BUFFERS

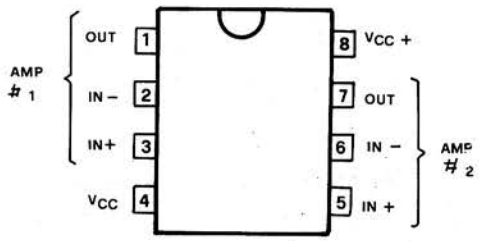

TL062
D, GR, OR P DUAL-IN-LINE PACKAGE

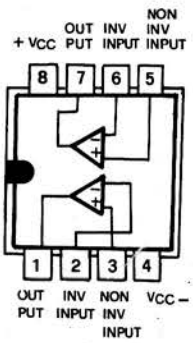

TL082
JFET-INPUT OPERATIONAL AMPLIFIER

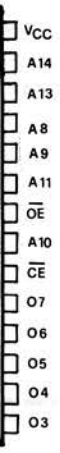

ASABLE

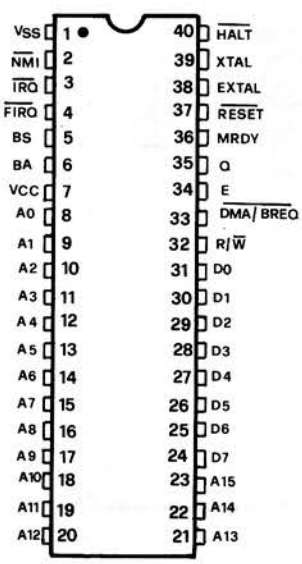

68B09
8-BIT MICROPROCESSOR

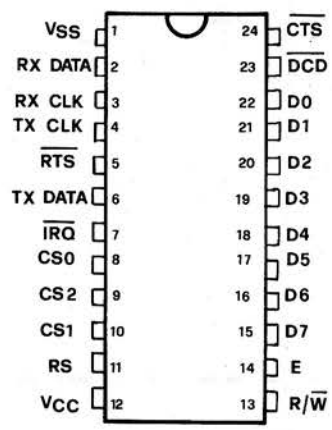

68B50
ASYNCHRONOUS COMMUNICATIONS INTERFACE ADAPTER

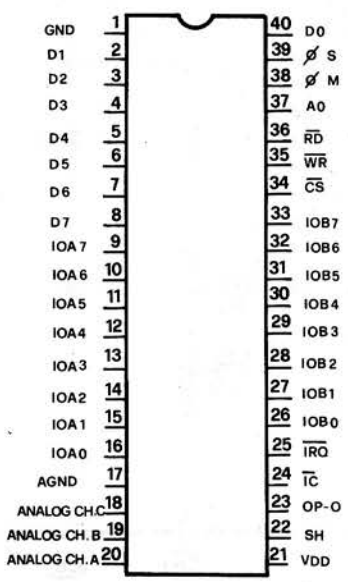

SG1
SOUND GENERATIONS

VDD

TO BUF

LOA

SI

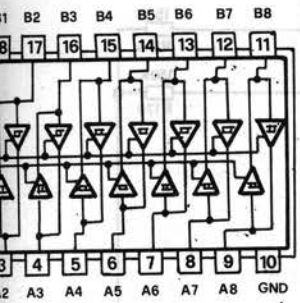

74LS245

OCTAL BUS TRANCEIVERS

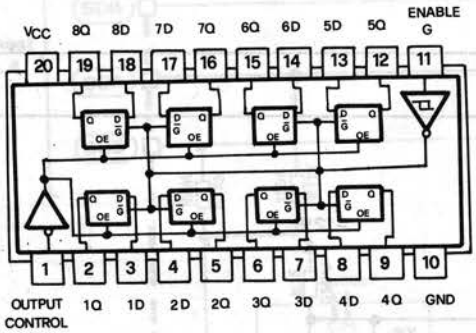

74LS373

OCTAL D-TYPE LATCHES

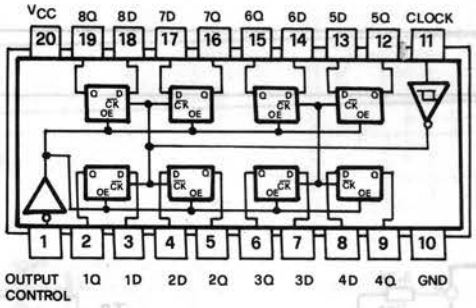

74LS374-74AS374

OCTAL D-TYPE FLIP-FLOPS

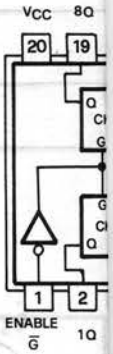

OC

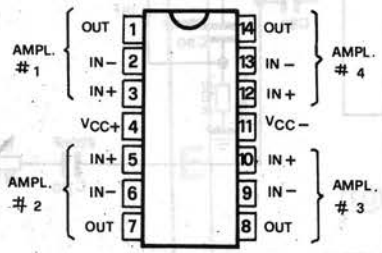

TL084

JFET-INPUT OPERATIONAL AMPLIFIERS

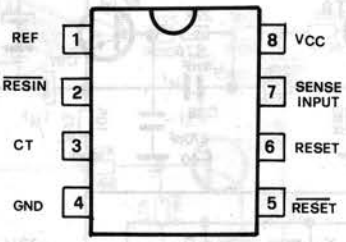

TL7705

D OR P DUAL-IN-LINE PACKAGE

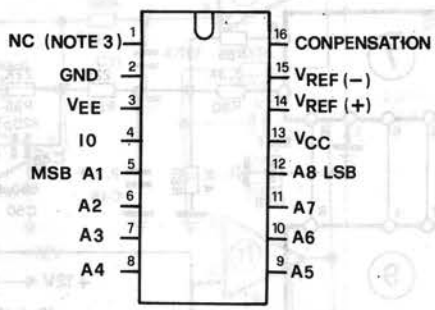

DAC0808

8 BIT D/A CONVERTERS

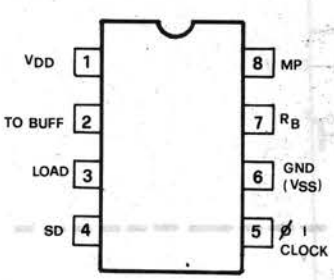

DA1

DIGITAL ANALOGIC

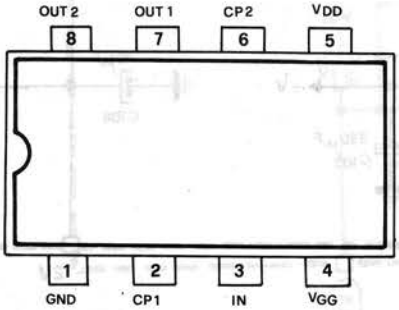

MN3009

TERMINAL ASSIGNMENTS

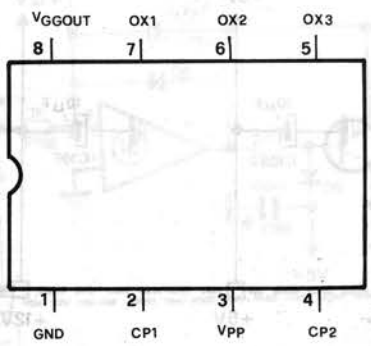

MN3101

CLOCK GENERATOR DRIVER



SPLIT

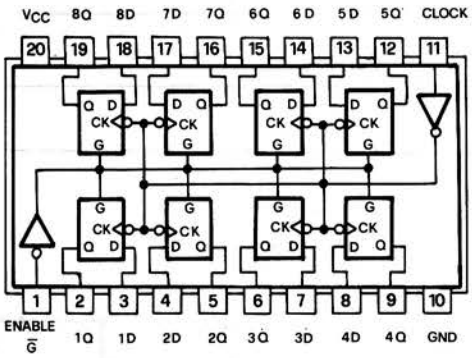

74LS377

OCTAL D-TYPE FLIP-FLOPS

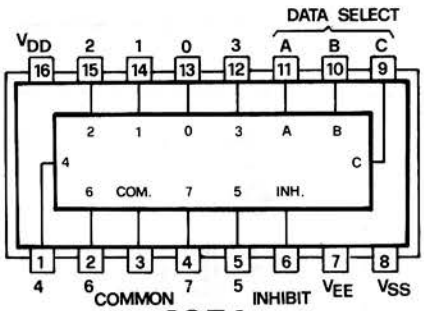

4051

SINGLE 8-CHANNEL
MULTIPLEXER/ DEMULTIPLEXER

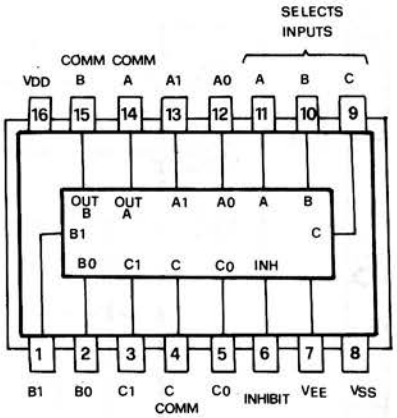

4053

TRIPLE 2 CHAN. ANALOG
MULTIPLEXER DE MULTIPLEXER

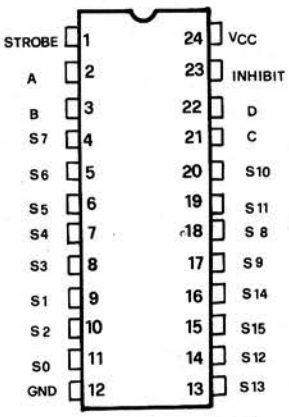

HC4514

4-TO-16 LINE DECODER/LATCH

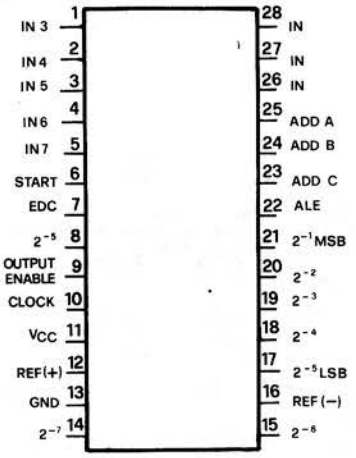

ADC0809

8-BIT μP COMPATIBLE A/D
CONVERTERS WITH 8-CHANNEL
MULTIPEXER

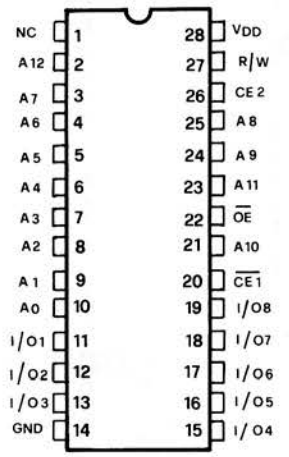

5565-6264

8, 192 WORD x 8 BIT CMOS STATIC
RAM

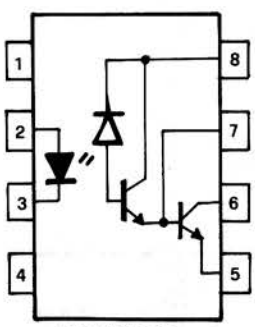

6N138

SPLIT DARLINGTON OPTOISOLATORS

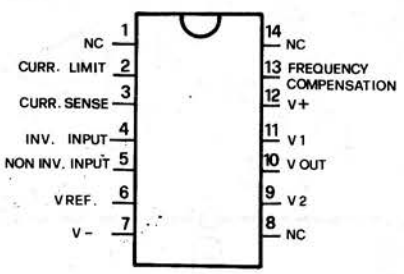

LM723 or LM723C

VOLTAGE REGULATORS

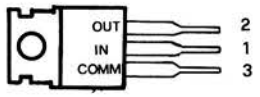

79M12-79M05

NEGATIVE VOLTAGE REGULATOR

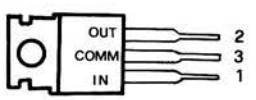

78M12

POSITIVE VOLTAGE REGULATOR

Manufactured by **ELKA**