ELKA

CONCORDE 119

schematic diagrams



	Model	Object :	Sheet No A
	Concorde 119	Inside view of the organ	Date 11 + 2 - 82

1. 410CST1291 - Rhythm Unit Potentiometers
2. 410CST1333 - Rhythm Unit Switches
3. 410CST1416 - 74LS00 Circuit
4. 410CST1292 - Tempo Potentiometers
5. 410CST1334 - Bass and Chord Registers
6. 410CST1337 - Volume Potentiometers
7. 410CST1320 - 410CST1375 / 410CST1376 - 410CST1379 } Contacts Assembly for Chord and Bass
8. 410CST1335 - Treble Registers
9. 410CST1289 - Presets Switches
10. 410CST1288 - Presets Latch
11. 410CST1336 - Motion Effects and Vibrato Registers
12. 410CST1321 - 410CST1377 / 410CST1378 - 410CST1380 - 410CST1381 } Contacts Assembly for Treble
13. 410CST1313 - Master Volume Potentiometer
14. 410CST1404 - Mains Filter

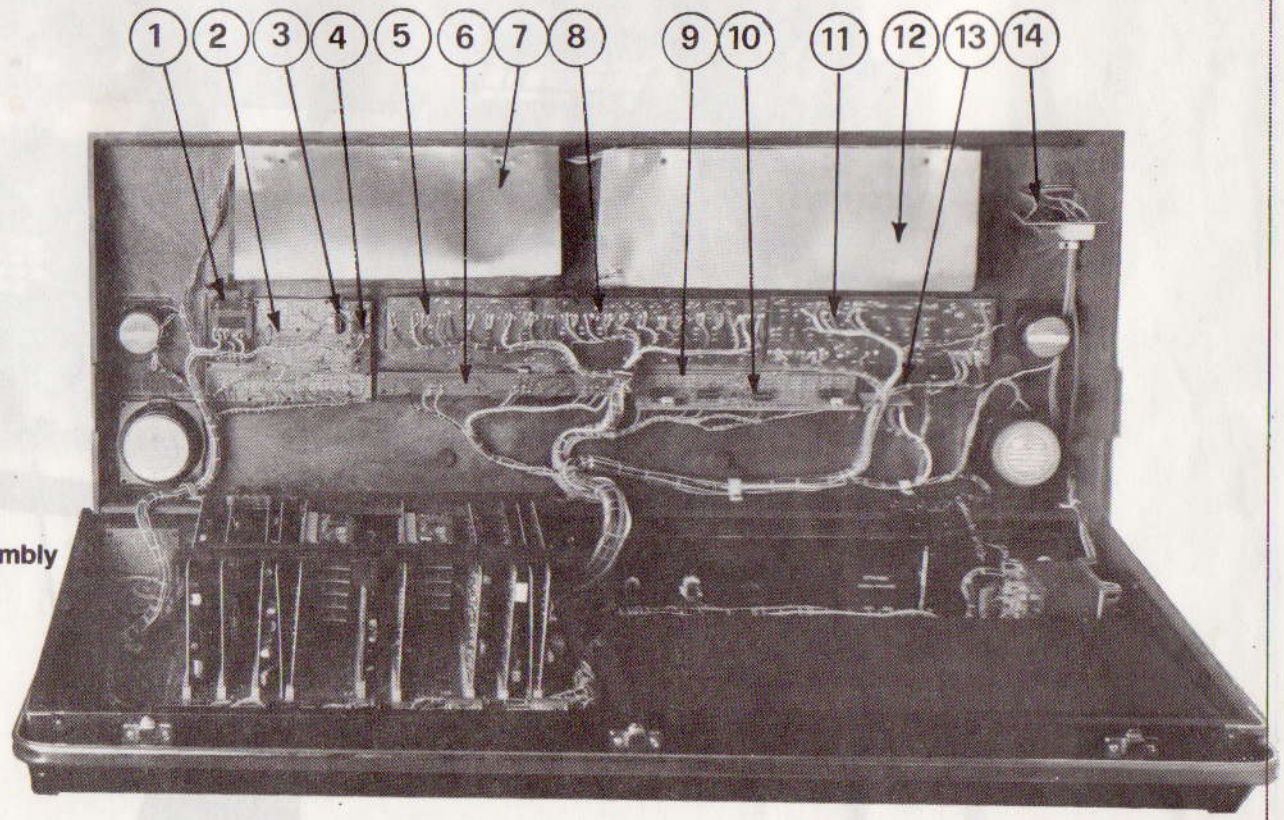

	Model	Object:	Sheet No B
	Concorde 119	Inside view of the organ	Date 12-2-82

1. 410CST1280 - Master Board
2. 410CST1272 - Motion Effects
3. 410CST1273 - Percussion and Brass
4. 410CST1274 - Upper Filters and Pedal Control
5. 410CST1294 - Shield
6. 410CST1275 - Upper Generator
7. 410CST1295 - Upper Switches and Squelch
8. 410CST1296x6 - Upper Switches
9. 410CST1275 - Lower Generator
10. 410CST1297 - Lower Switches and Squelch
11. 410CST1298x5 - Lower Switches
12. 410CST1277 - Rhythm Unit
13. 410CST1278 - Vibrato Lower and Bass Filters
14. 410CST1294 - Shield
15. 410CST1279 - Solo
16. 410CST1269 - Microprocessor

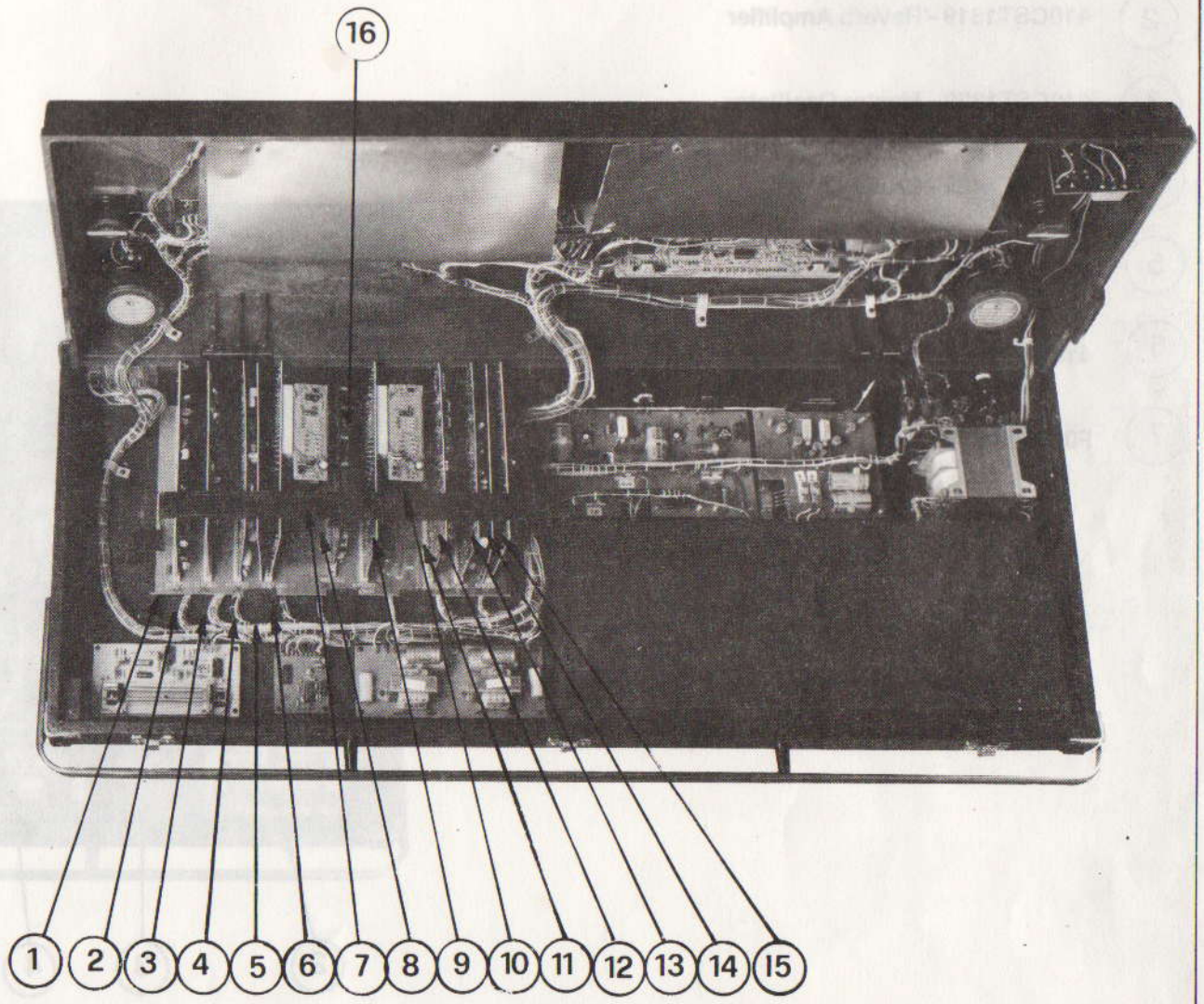

	Model	Object :	Sheet No C
	Concorde 119	Inside view of the organ	Date 11-2-82

1. 410CST1282 - Decoder
2. 410CST1319 - Reverb Amplifier
3. 410CST1339 - Master Oscillator
4. 410CST1405 - Cross-Over
5. 410CST1338 - Power Supply
6. 410CST1340 - Amplifier
7. F000504 - Tuning Circuit

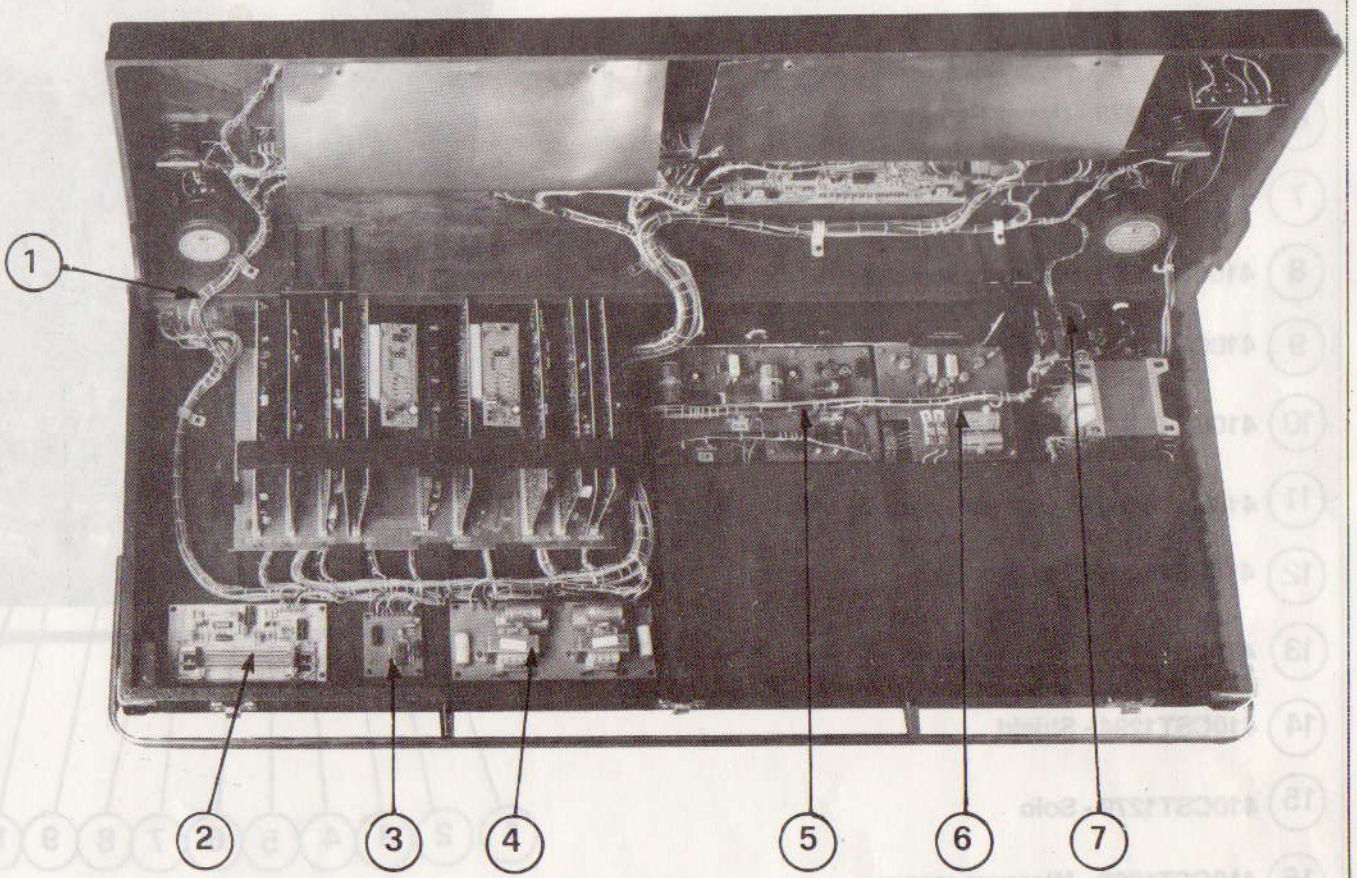

	Model	Object:	Sheet No D
	Concorde 119	Inside view of the organ	Date 11- 2- 82

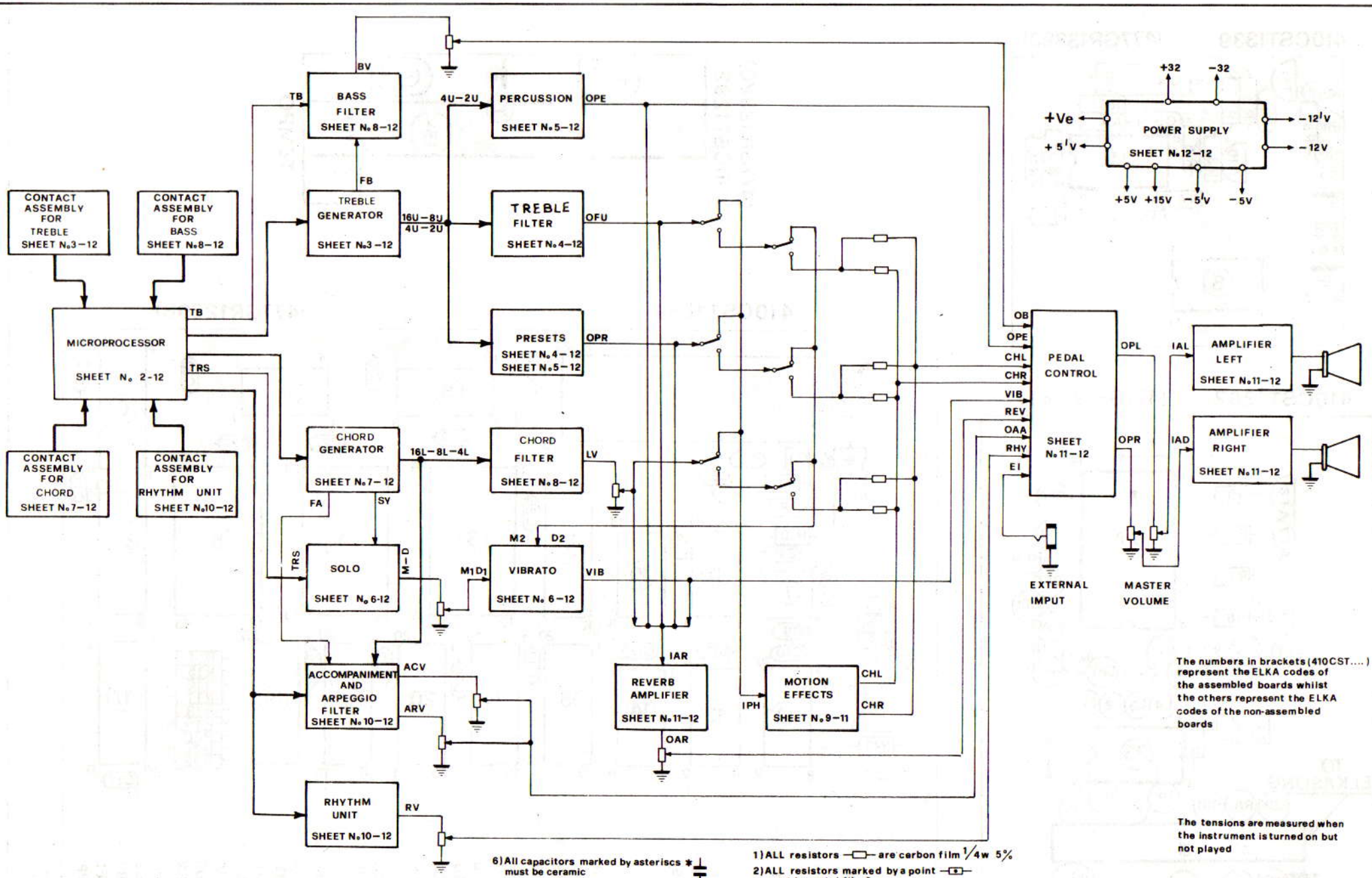

6) All capacitors marked by asteriscs * must be ceramic

1) ALL resistors —□— are carbon film 1/4w 5%
2) ALL resistors marked by a point —□— must be metal film 2%
3) ALL capacitors marked by a point must be plastic film 2%
4) ALL resistors must be mounted 10mm above board
5) ALL resistors must be mounted 10mm above board and non-flammable

Transistors	Equivalent
BC 171	BC173–BC10 –BC208–BC209
BC 173	BC109–BC209–BC 239
BC 415B	BC 205–BC 308 B
BC 415C	BC 205–308 C

ALL diodes are:
FDH 9439 Fairchild
or 125 ITT
or BA 130
or 2pF

The numbers in brackets (410CST....) represent the ELKA codes of the assembled boards whilst the others represent the ELKA codes of the non-assembled boards

The tensions are measured when the instrument is turned on but not played

The firm reserves the right to make changes without any warning and to their own discretion

DESIGNED BY	DRAWN BY	CHECHED BY

Model	Object:	Sheet
Concorde 119	BLOCK DIAGRAM	N° 1–12
		Date 29–9–81

410CST1339 (477GR13390)

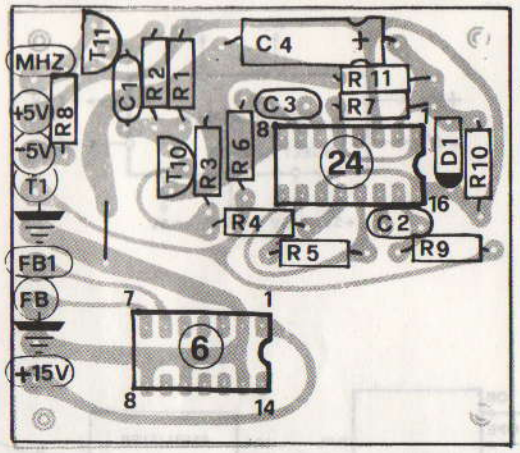

(477GR12920) 410CST1292 TEMPO

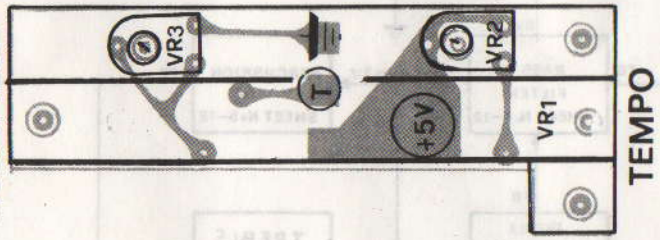

410CST1282 (477GR12821)

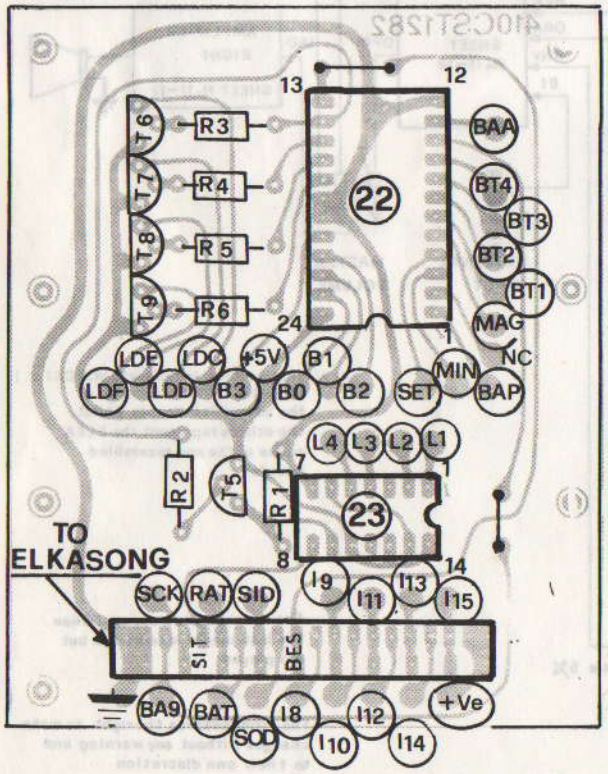

410CST1269 (477GR1269B)

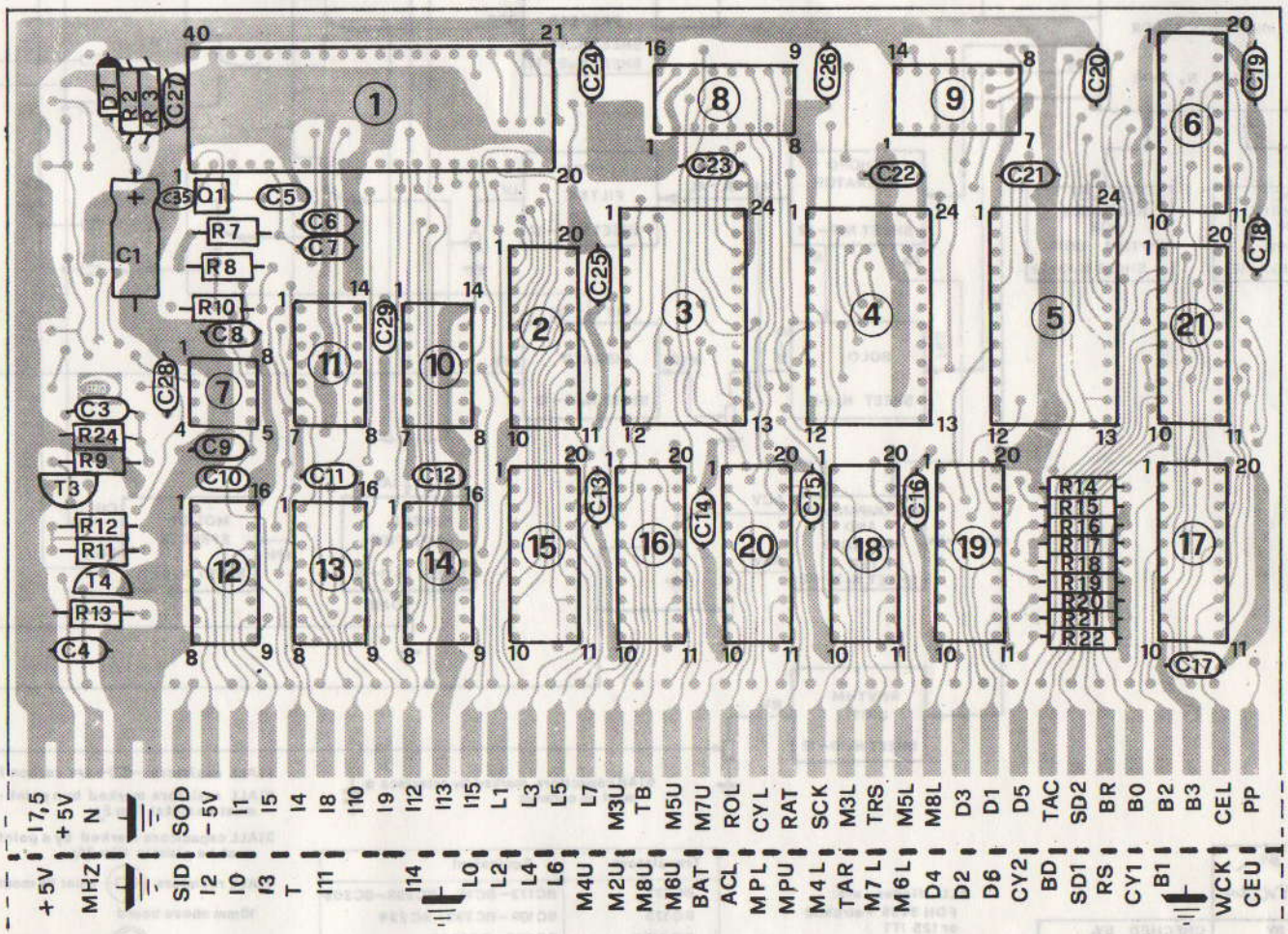

	Model	Object:	Sheet No 2a-12
	Concorde 119	Assembly of Printed Circuits	Date 2-1-82

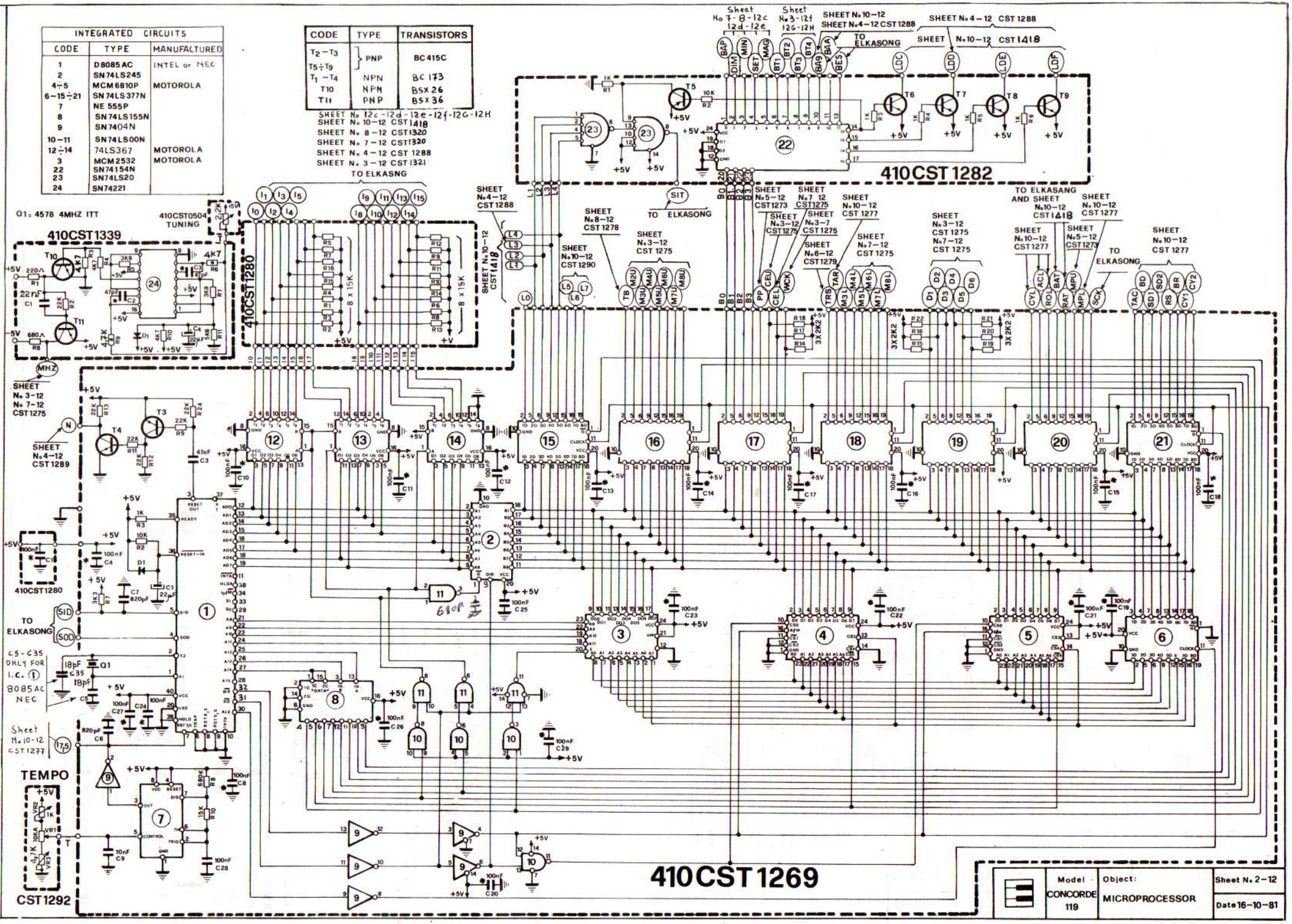
INTEGRATED CIRCUITS
CODE | TYPE | MANUFACTURED
1 | D8085AC | INTEL or NEC
2 | SN74LS245 |
4÷5 | MCM6810P | MOTOROLA
6-15÷21 | SN74LS377N |
7 | NE 555P |
8 | SN74LS155N |
9 | SN7404N |
10-11 | SN74LS00N |
12÷14 | 74LS367 | MOTOROLA
3 | MCM2532 | MOTOROLA
22 | SN74154N |
23 | SN74LS20 |
24 | SN74221 |
CODE | TYPE | TRANSISTORS
T2-T3 | PNP | BC 415C
T5÷T9 | PNP | BC 415C
T1-T4 | NPN | BC 173
T10 | NPN | BSX 26
T11 | PNP | BSX 36
SHEET No 12c-12d-12e-12f-12G-12H
SHEET No 10-12 CST 1418
SHEET No 8-12 CST 1320
SHEET No 7-12 CST 1320
SHEET No 4-12 CST 1288
SHEET No 3-12 CST 1321
TO ELKASNG
Q1= 4578 4MHZ ITT
410CST0504 TUNING
410CST1339
410CST1280
410CST1282
410CST1269
CST1292
TEMPO
TO ELKASONG
SHEET No 4-12 CST 1288
SHEET No 10-12 CST 1418
SHEET No 4-12 CST 1288
SHEET No 10-12 CST 1277
SHEET No 8-12 CST 1278
SHEET No 10-12 CST 1290
SHEET No 3-12 CST 1275
SHEET No 5-12 CST 1273
SHEET No 7 12 CST 1275
SHEET No 3-12 CST 1275
SHEET No 3-7 CST 1275
SHEET No 6-12 CST 1279
SHEET No 10-12 CST 1277
SHEET No 7-12 CST 1275
SHEET No 3-12 CST 1275
SHEET No 7-12 CST 1275
SHEET No 10-12 CST 1277
SHEET No 5-12 CST 1273
SHEET No 10-12 CST 1277
SHEET No 3-12 CST 1275
SHEET No 7-12 CST 1275
SHEET No 4-12 CST 1289
Model CONCORDE 119
Object: MICROPROCESSOR
Sheet No 2-12
Date 16-10-81

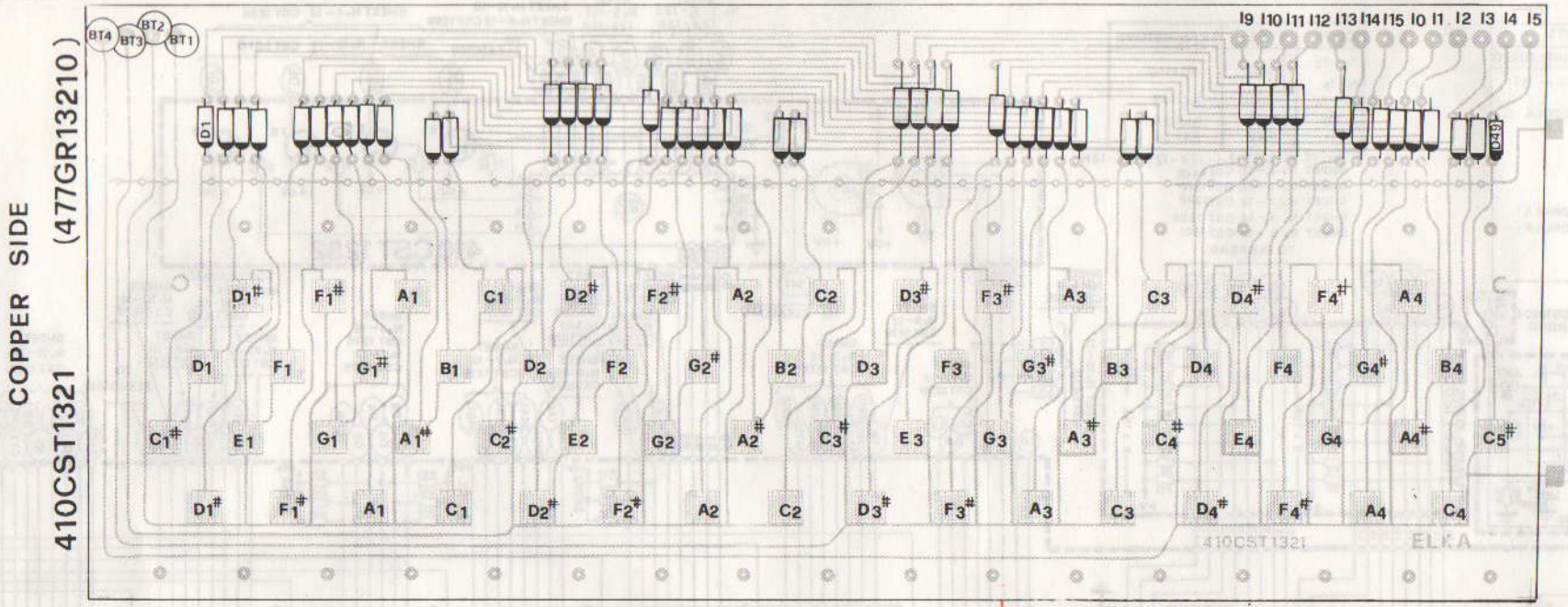

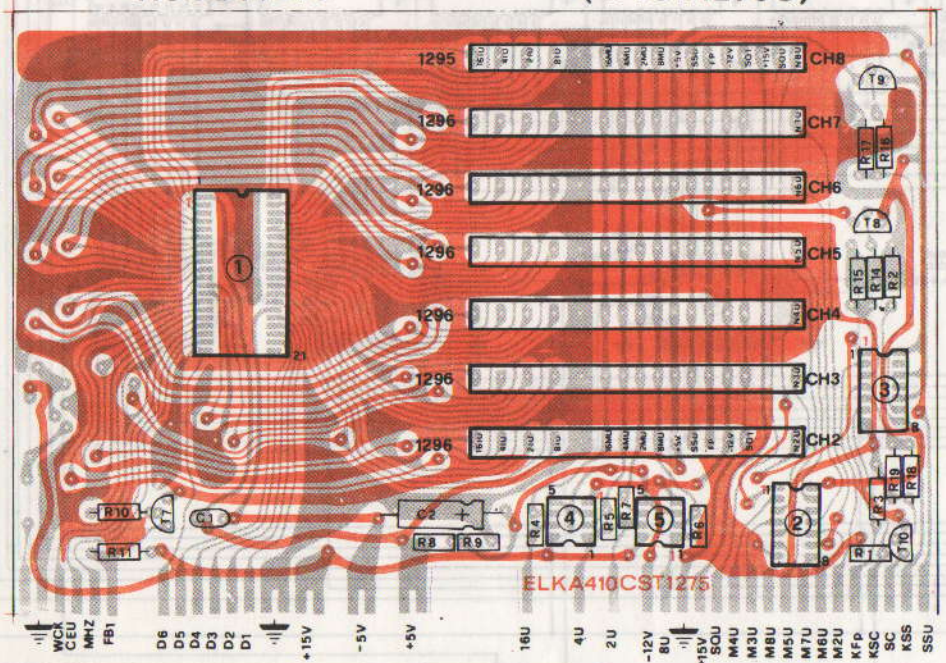

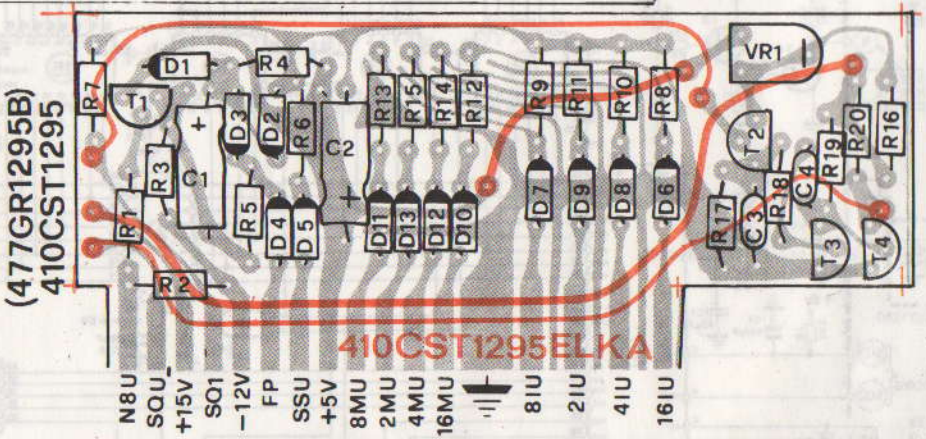

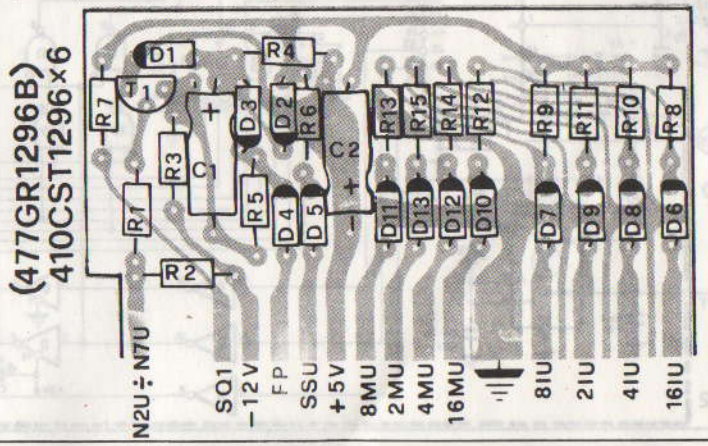

	Model Concorde 119	Object: Assembly of Printed Circuits	Sheet No 3a-12
			Date 3-2-82

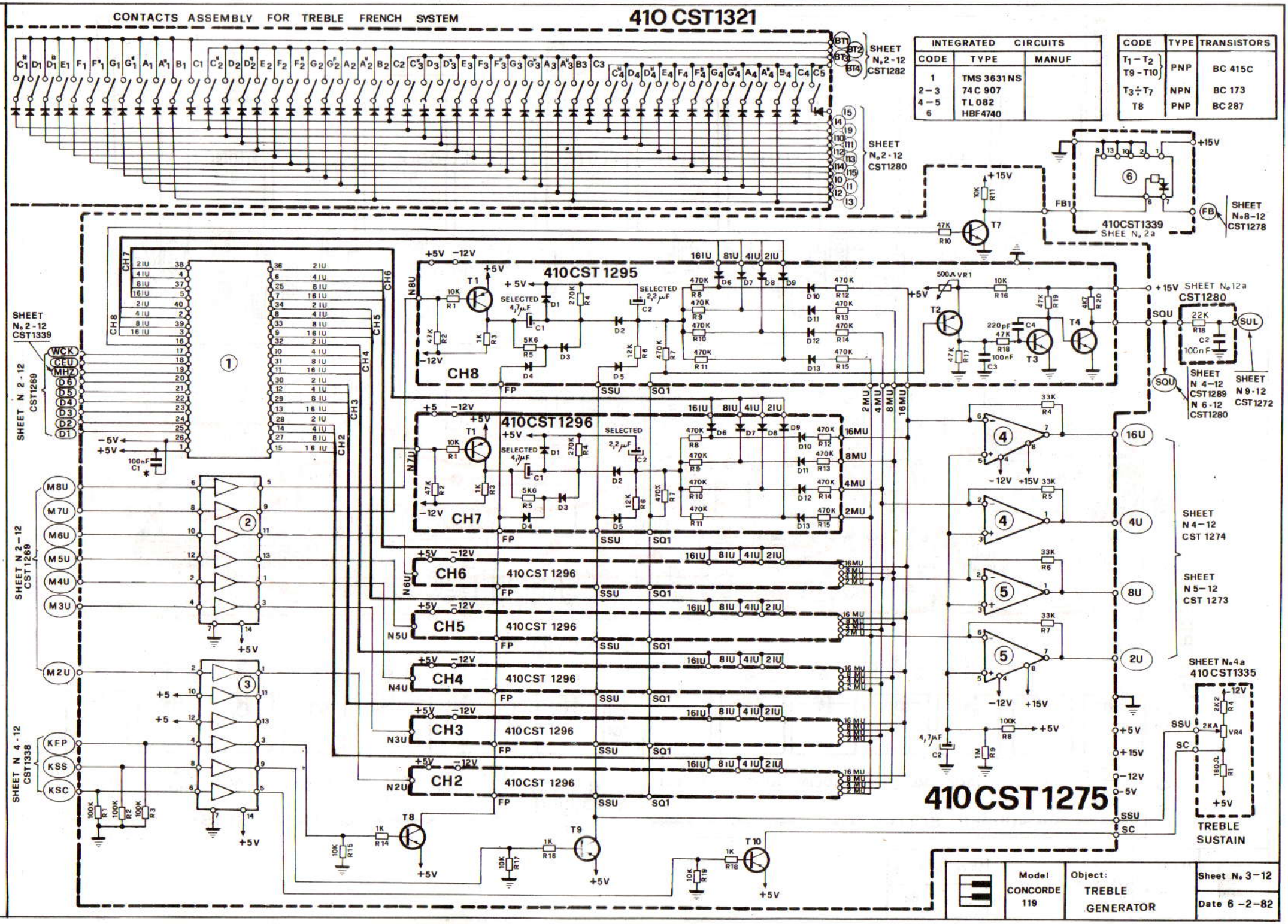
CONTACTS ASSEMBLY FOR TREBLE FRENCH SYSTEM
410 CST1321
SHEET N°2-12 CST1282
SHEET N°2-12 CST1280
INTEGRATED CIRCUITS
CODE | TYPE | MANUF
1 | TMS 3631 NS
2-3 | 74 C 907
4-5 | TL 082
6 | HBF4740
CODE | TYPE | TRANSISTORS
T1 - T2 / T9 - T10 | PNP | BC 415C
T3 ÷ T7 | NPN | BC 173
T8 | PNP | BC 287
410CST1339 SHEE N°2a
SHEET N°8-12 CST1278
SHEET N°2-12 CST1339
SHEET N 2-12 CST1269
410 CST 1295
410CST 1296
CH8
CH7
CH6
CH5
CH4
CH3
CH2
SHEET N°12a CST1280
SHEET N 4-12 CST1289 N 6-12 CST1280
SHEET N 9-12 CST1272
SHEET N 2-12 CST1269
SHEET N 4-12 CST1338
SHEET N°4-12 CST 1274
SHEET N 5-12 CST 1273
SHEET N°4a 410 CST1335
TREBLE SUSTAIN
410CST1275
Model CONCORDE 119
Object: TREBLE GENERATOR
Sheet N° 3-12
Date 6-2-82

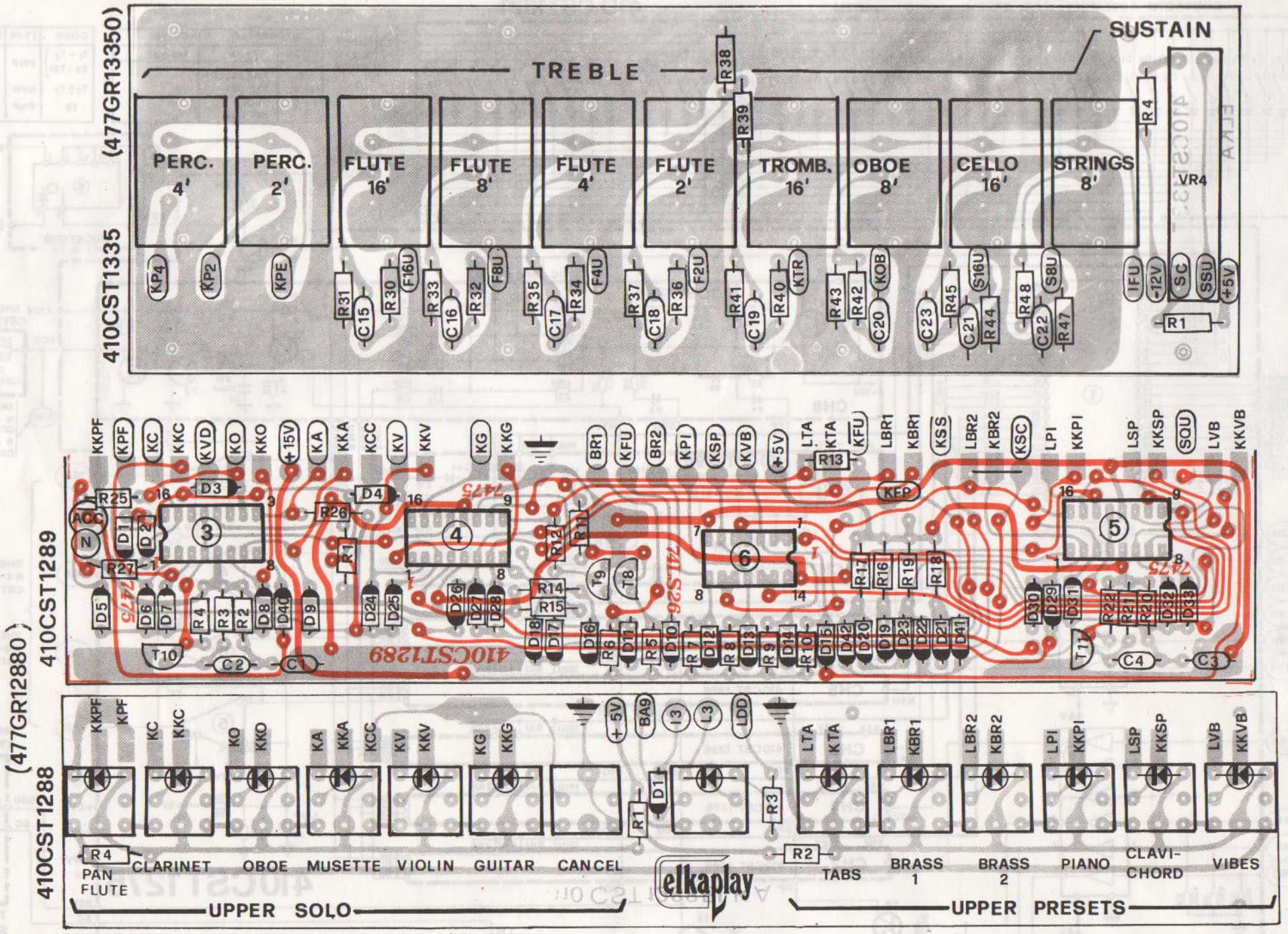

	Model	Object:	Sheet No 4a-12
	Concorde 119	Assembly of Printed Circuits	Date 6-1-82

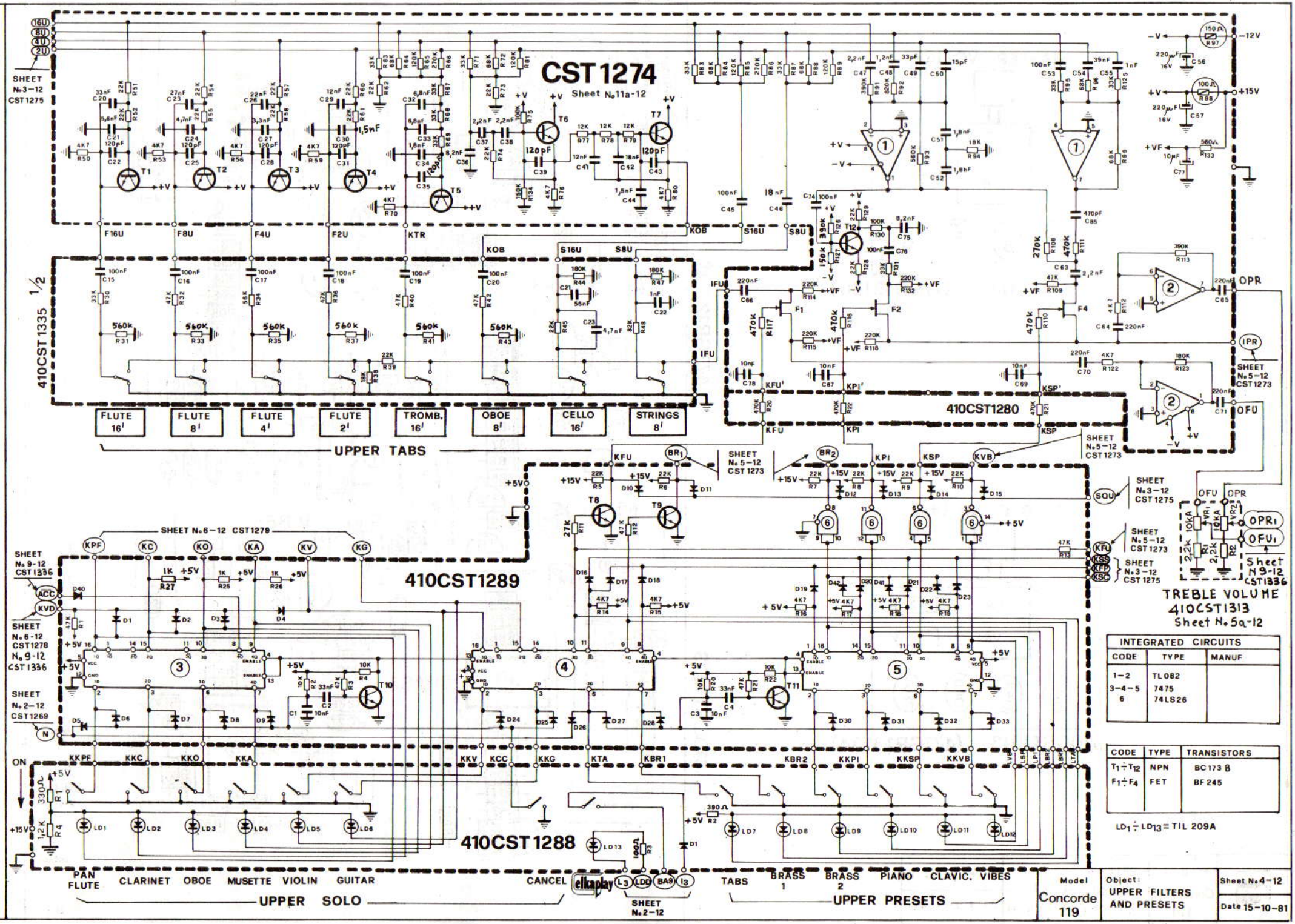

INTEGRATED CIRCUITS		
CODE	TYPE	MANUF
1-2	TL082	
3-4-5	7475	
6	74LS26	

CODE	TYPE	TRANSISTORS
$T_1 \div T_{12}$	NPN	BC173 B
$F_1 \div F_4$	FET	BF245

$LD_1 \div LD_{13}$ = TIL 209A

Model	Object:	Sheet N°4-12
Concorde 119	UPPER FILTERS AND PRESETS	Date 15-10-81

MASTER VOLUME

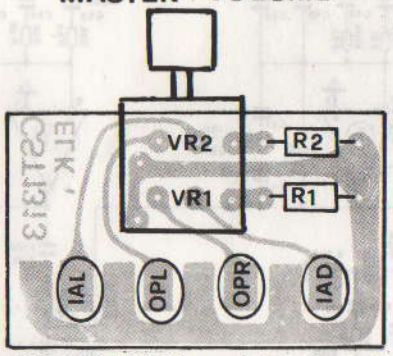

410CST1313 (477GR13130)

TREBLE VOLUME

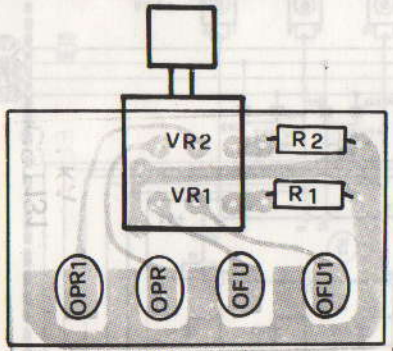

410CST1313 (477GR1313A)

(477GR12730)

410CST1273

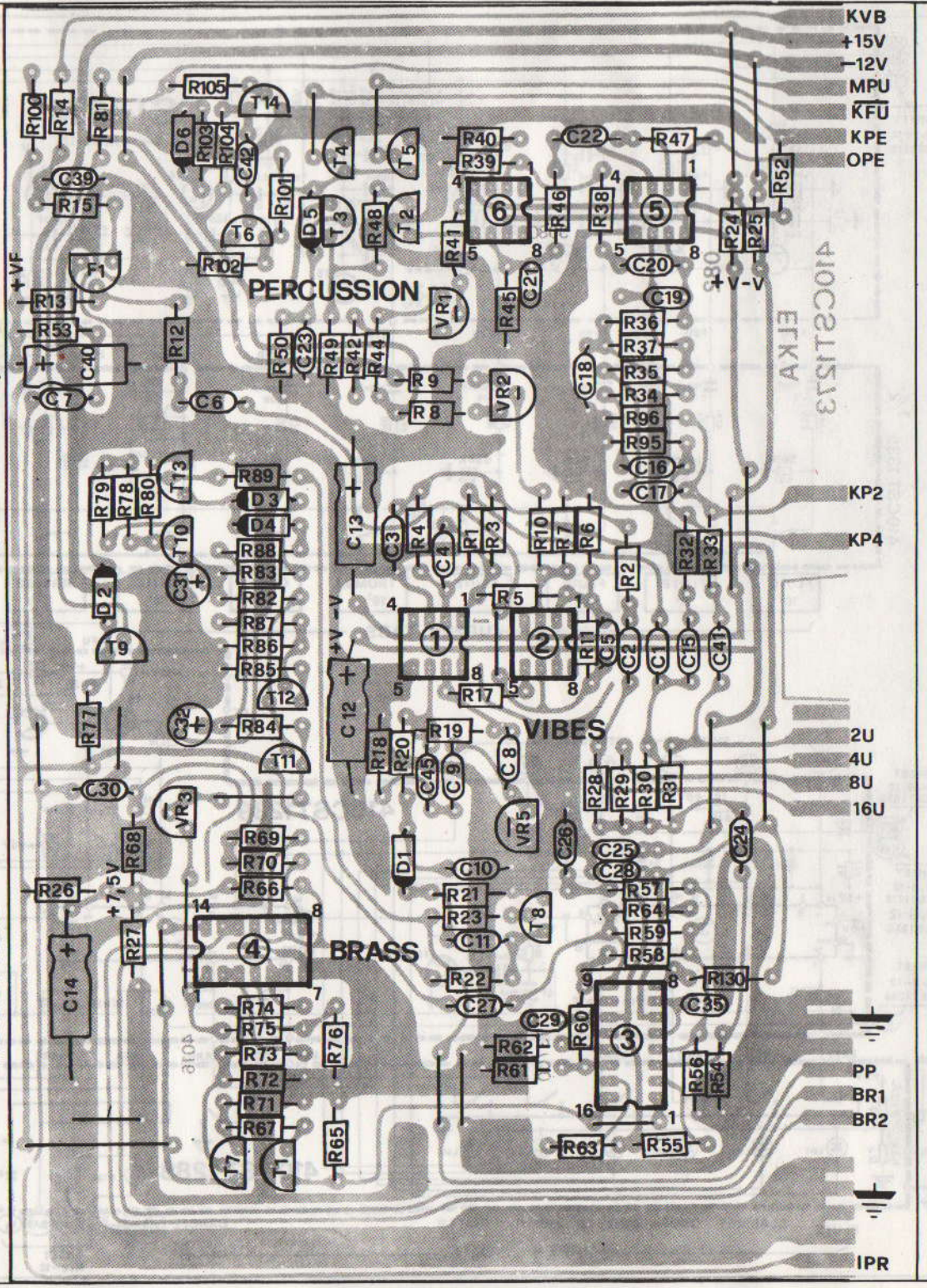

	Model	Object:	Sheet No 5a-12
	Concorde 119	Assembly of Printed Circuits	Date 5-1-82

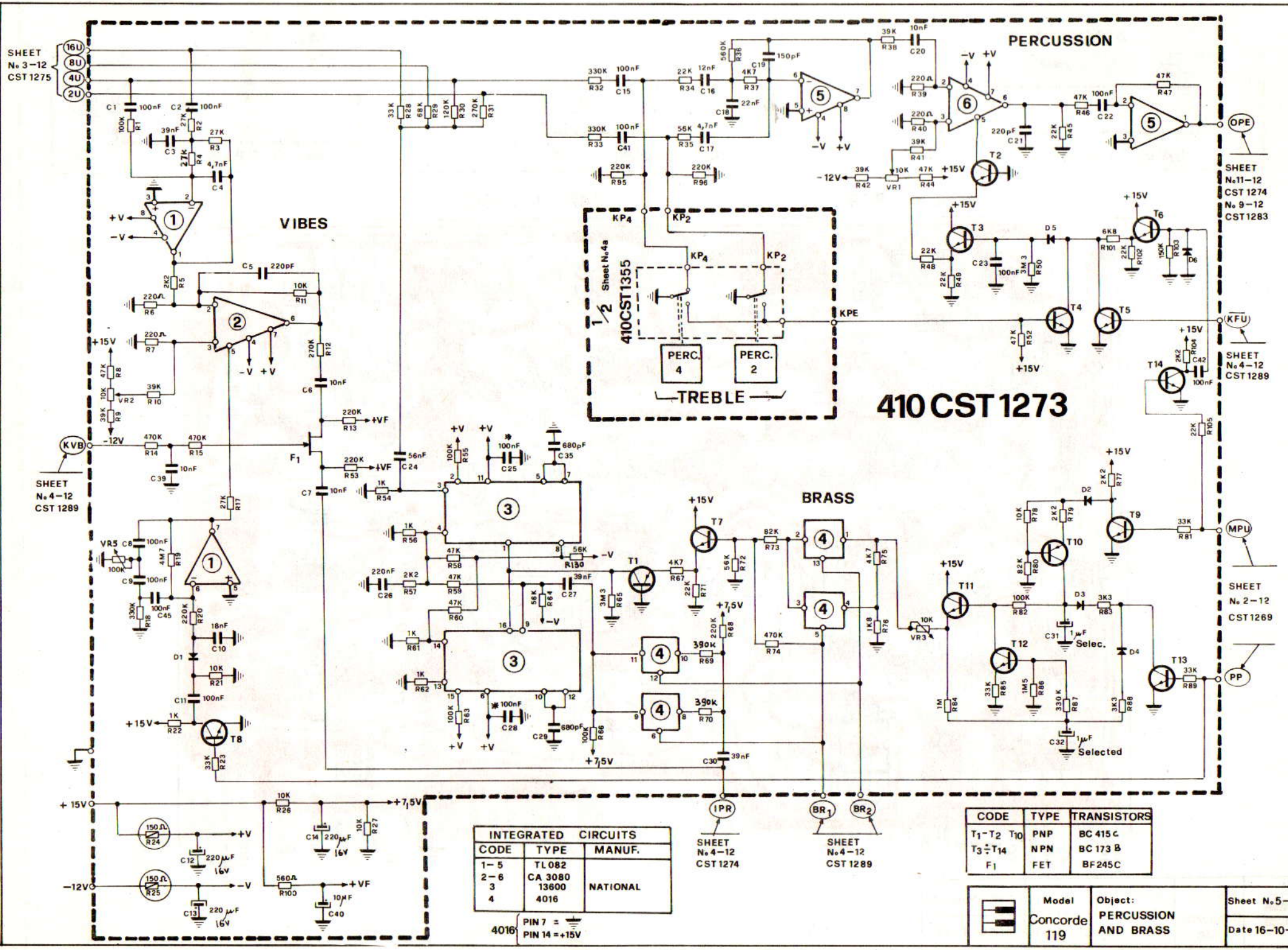

INTEGRATED CIRCUITS		
CODE	TYPE	MANUF.
1–5	TL082	
2–6	CA 3080	
3	13600	NATIONAL
4	4016	

4016: PIN 7 = ⏚, PIN 14 = +15V

CODE	TYPE	TRANSISTORS
T_1–T_2 T_{10}	PNP	BC 415 C
T_3 ÷ T_{14}	NPN	BC 173 B
F_1	FET	BF245C

	Model	Object:	Sheet No 5–12
	Concorde 119	PERCUSSION AND BRASS	Date 16–10–81

410CST1337

(477GR13370)

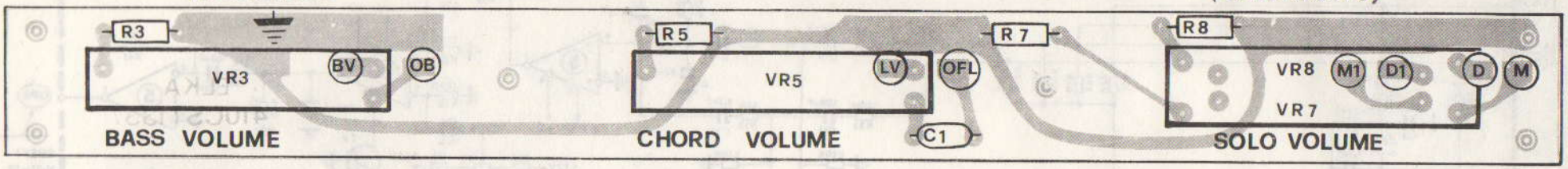

410CST1279

(477GR1279C)

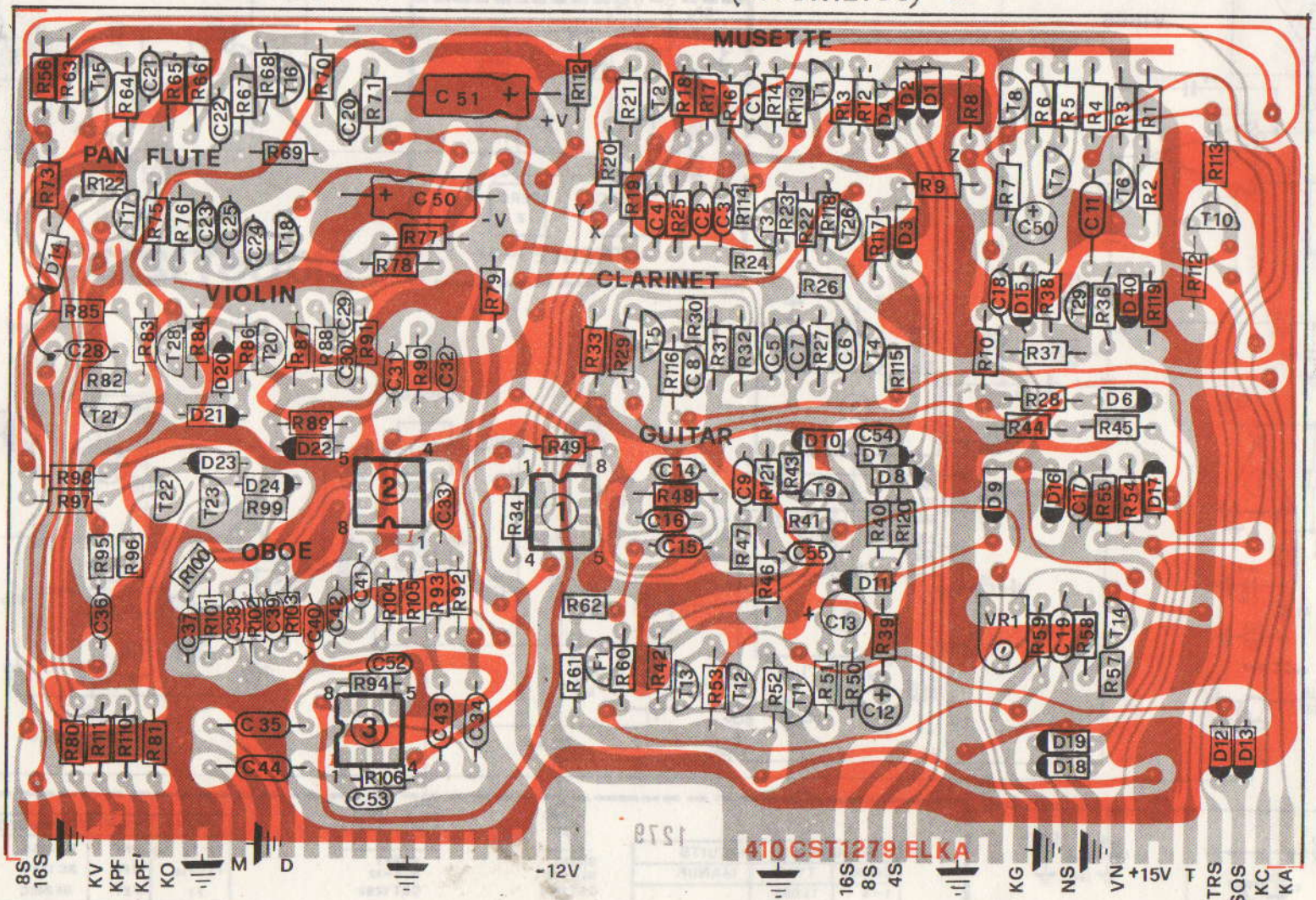

	Model	Object:	Sheet No 6a-12
	Concorde 119	Assembly of Printed Circuits	Date 6-1-82

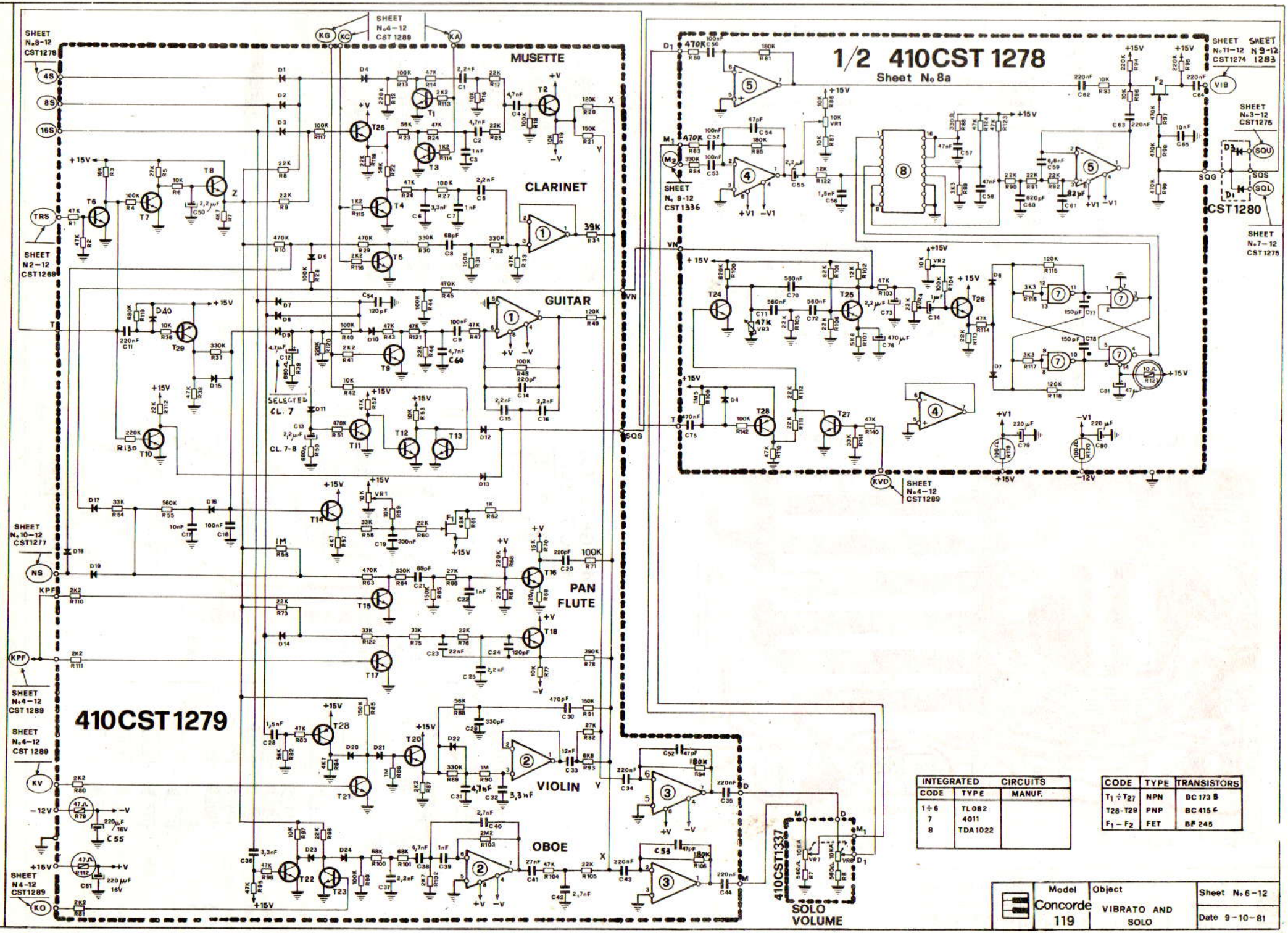

INTEGRATED CIRCUITS		
CODE	TYPE	MANUF.
1÷6	TL082	
7	4011	
8	TDA1022	

CODE	TYPE	TRANSISTORS
$T_1 \div T_{27}$	NPN	BC 173 B
T28-T29	PNP	BC 415 C
$F_1 - F_2$	FET	BF 245

Model	Object	Sheet No 6-12
Concorde 119	VIBRATO AND SOLO	Date 9-10-81

COPPER SIDE (477GR13200)

410CST1320

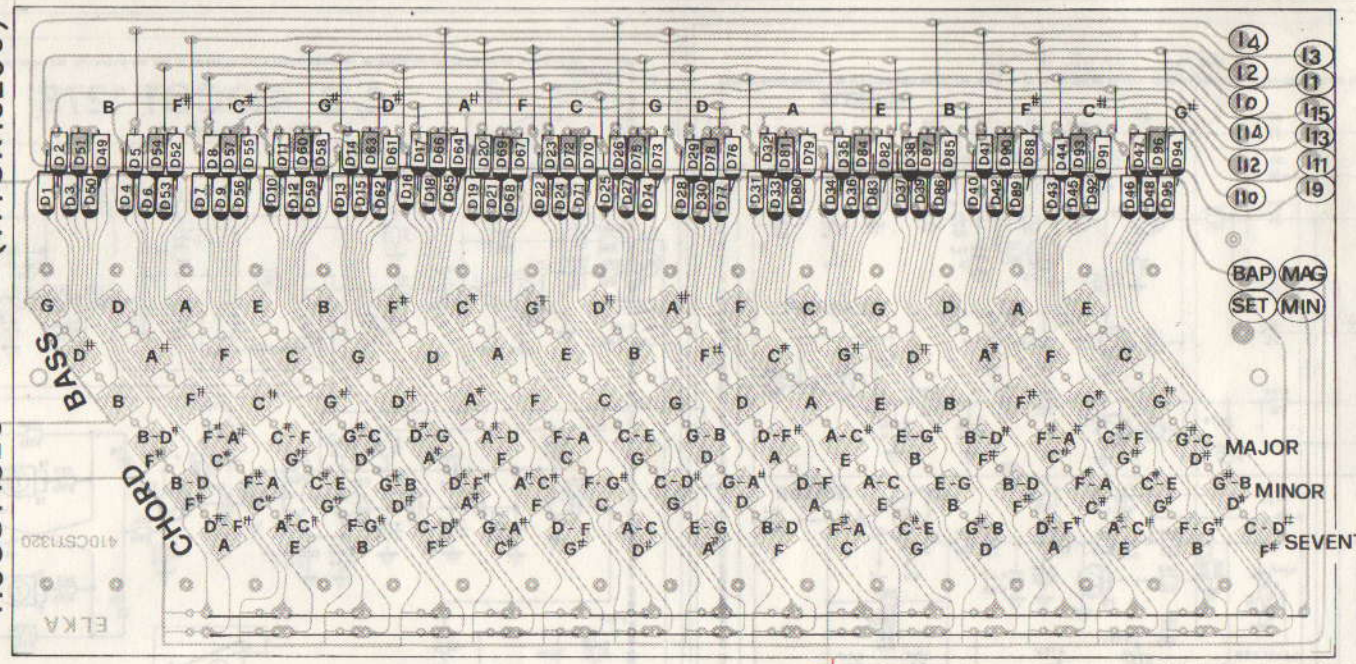

410CST1275 (477GR1275D)

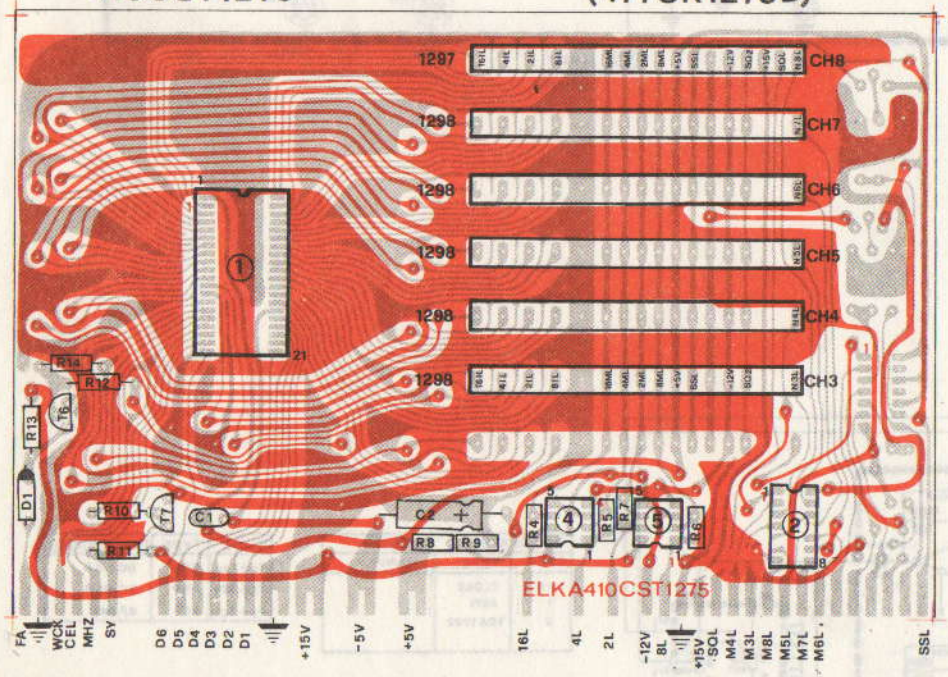

(477GR12970) 410CST1297

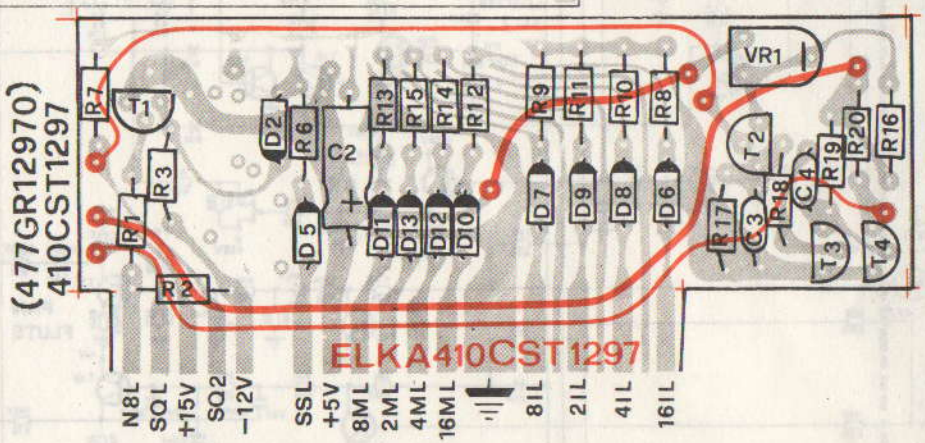

(477GR1298C) 410CST1298×5

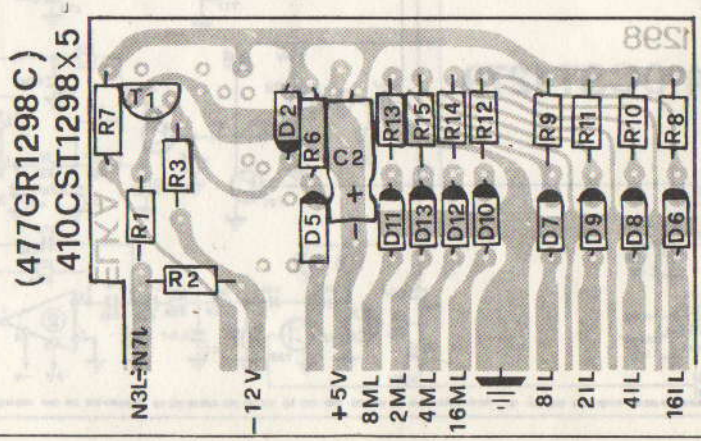

	Model	Object:	Sheet No.
	Concorde 119	Assembly of Printed Circuits	7a-12
			Date 3-2-82

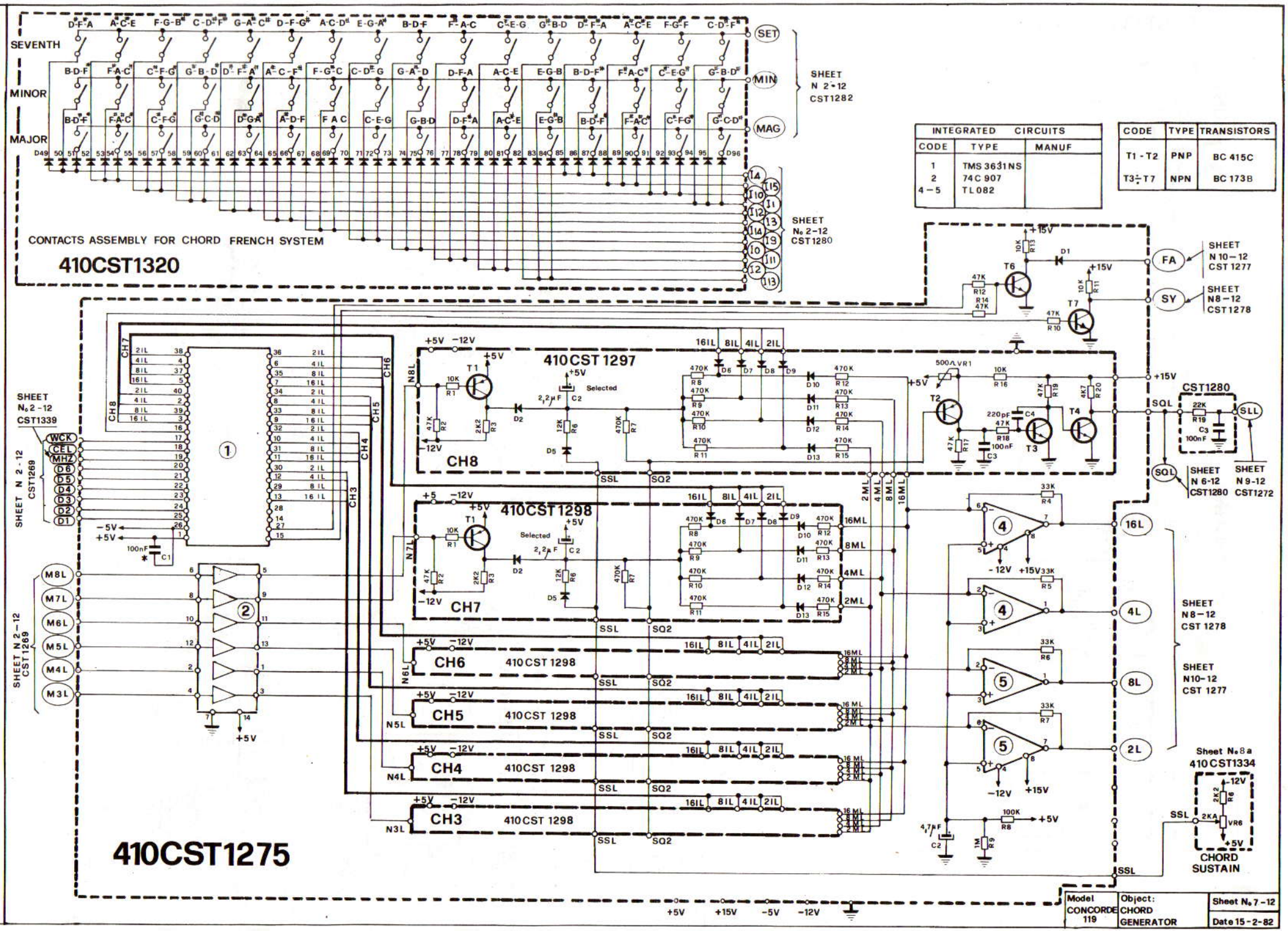
SEVENTH
MINOR
MAJOR
SET
MIN
MAG
SHEET N 2-12 CST1282
SHEET N° 2-12 CST1280
CONTACTS ASSEMBLY FOR CHORD FRENCH SYSTEM
410CST1320
INTEGRATED CIRCUITS
CODE | TYPE | MANUF
1 | TMS 3631NS
2 | 74C 907
4-5 | TL082
CODE | TYPE | TRANSISTORS
T1 - T2 | PNP | BC 415C
T3 ÷ T7 | NPN | BC 173B
FA
SY
SHEET N 10-12 CST 1277
SHEET N8-12 CST1278
410CST 1297
CH8
410CST 1298
CH7
CH6
CH5
CH4
CH3
SSL
SQ2
SQL
SLL
CST1280
SHEET N 6-12 CST1280
SHEET N 9-12 CST1272
SHEET N° 2-12 CST1339
SHEET N 2-12 CST1269
WCK
CEL
MHZ
D6
D5
D4
D3
D2
D1
M8L
M7L
M6L
M5L
M4L
M3L
16L
4L
8L
2L
SHEET N8-12 CST 1278
SHEET N10-12 CST 1277
Sheet N°8a
410CST1334
CHORD SUSTAIN
410CST1275
Model CONCORDE 119
Object: CHORD GENERATOR
Sheet N° 7-12
Date 15-2-82

410CST1334 (477GR13340)

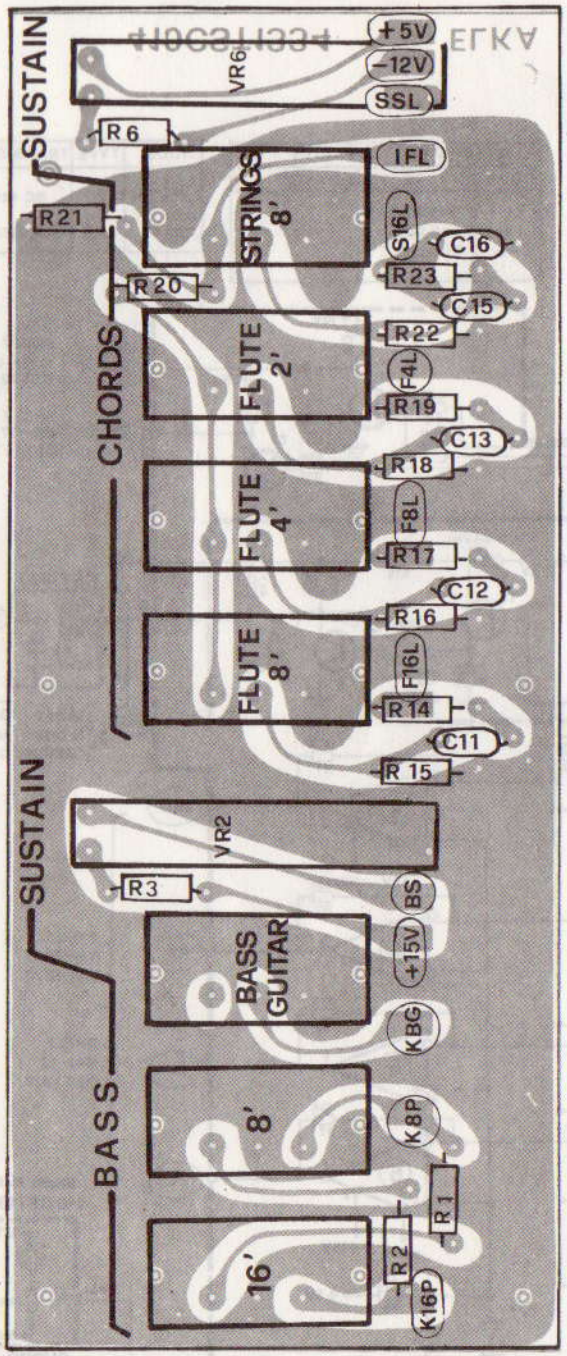

Model	Object:	Sheet No 8a-12
Concorde 119	Assembly of Printed Circuits	Date 8-1-82

(477GR1278C)

410CST1278

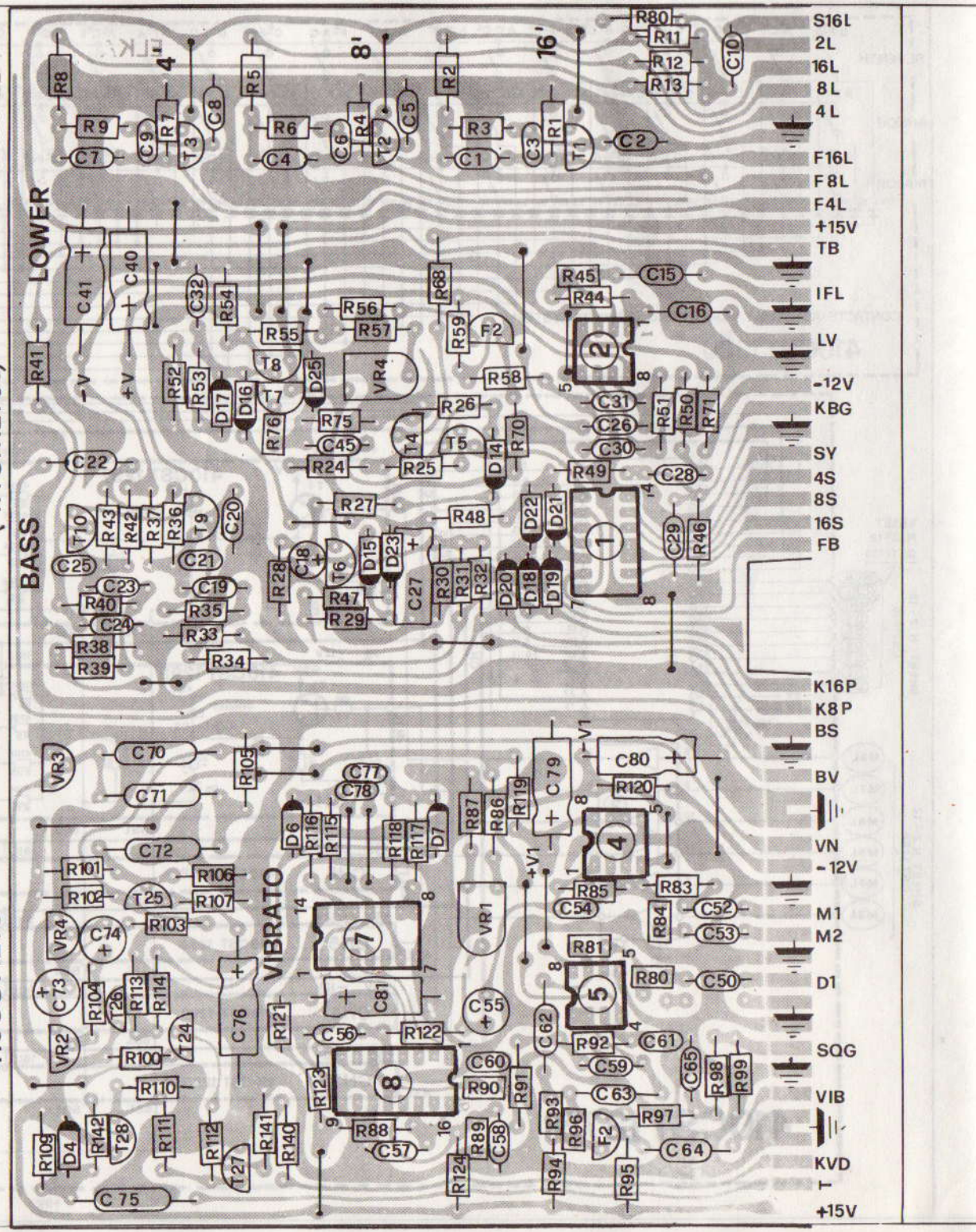

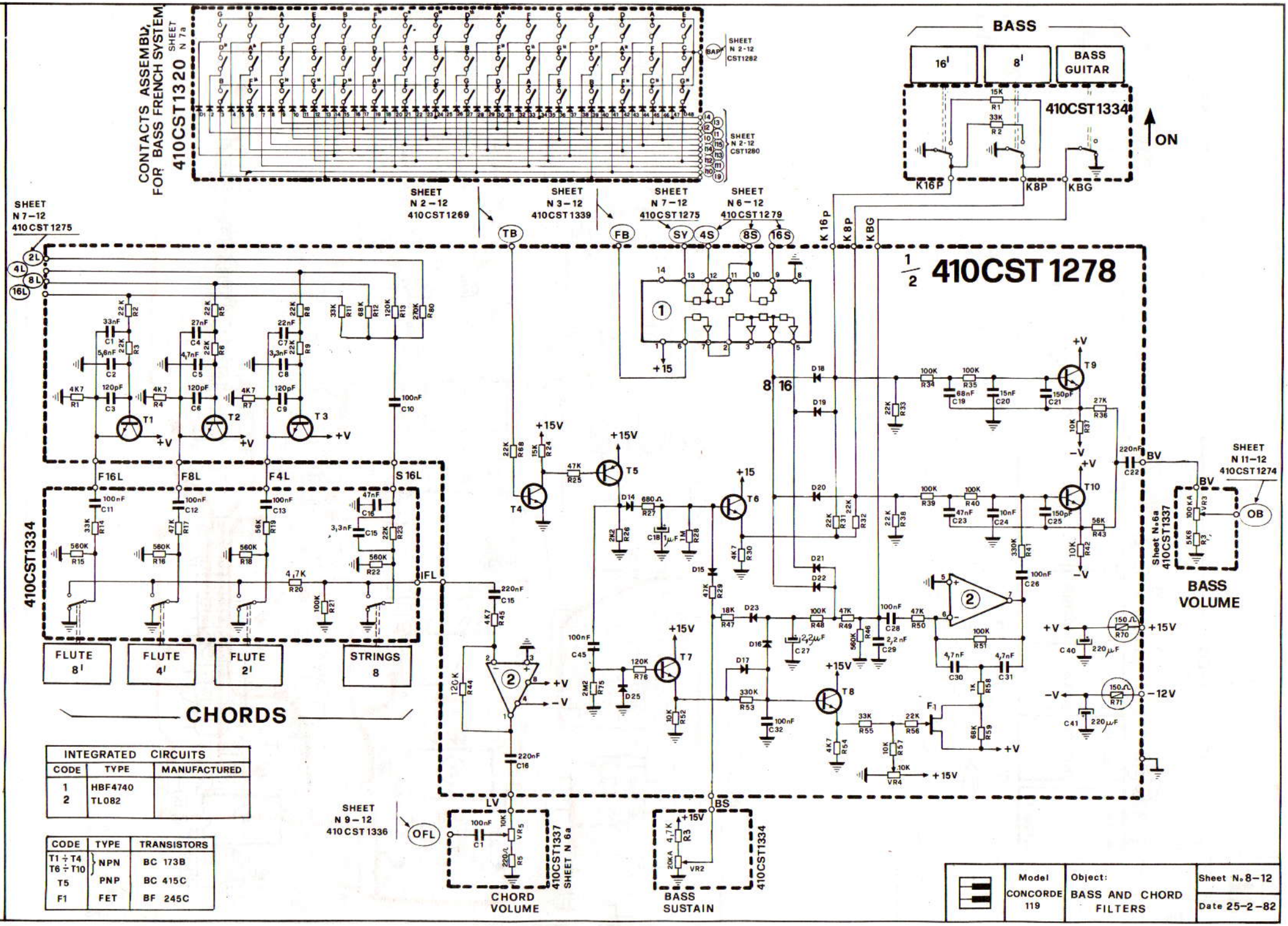

INTEGRATED CIRCUITS		
CODE	TYPE	MANUFACTURED
1	HBF4740	
2	TL082	

CODE	TYPE	TRANSISTORS
T1 ÷ T4 / T6 ÷ T10	NPN	BC 173B
T5	PNP	BC 415C
F1	FET	BF 245C

Model	Object:	Sheet N. 8-12
CONCORDE 119	BASS AND CHORD FILTERS	Date 25-2-82

Model Concorde 119

Object: Assembly of Printed Circuits

Sheet No 9a-12

Date 9-1-82

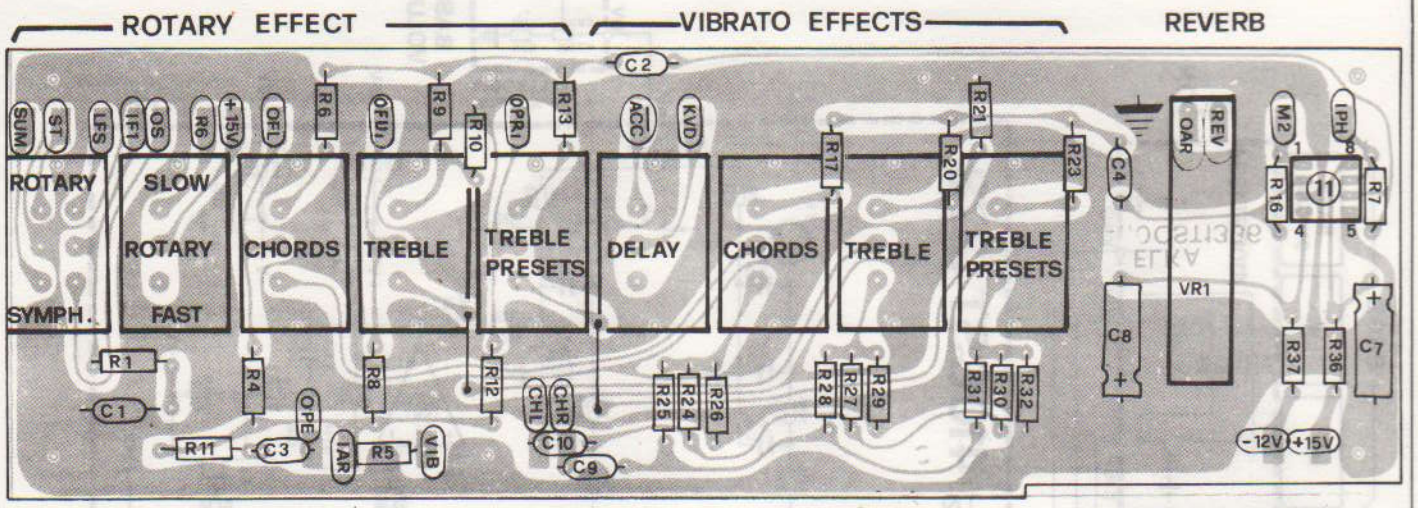

410CST1336

(477GR13360)

410CST1272

(477GR12720)

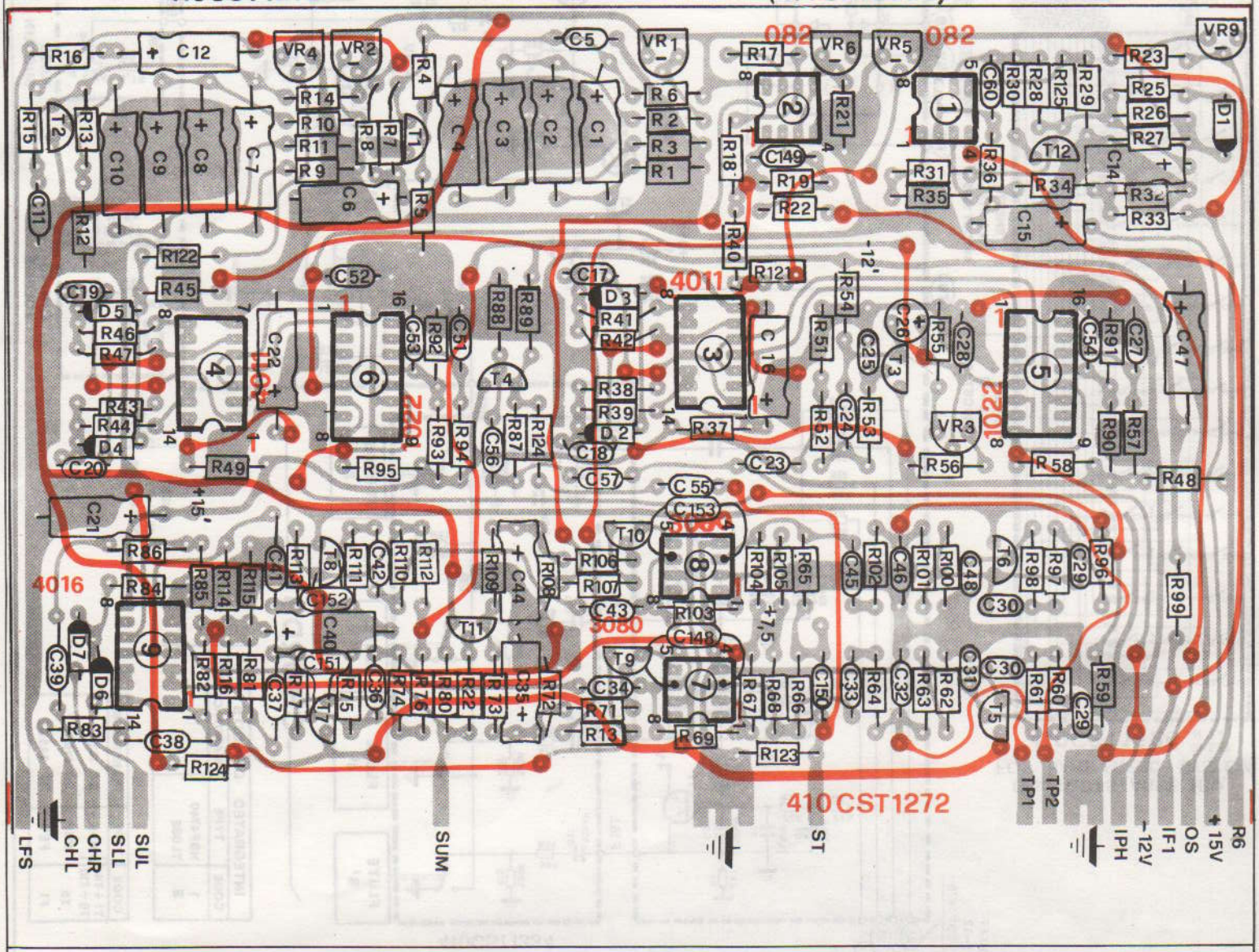

INTEGRATED CIRCUITS		
CODE	TYPE	MANUFACTURED
1–2	TL 082	
3 – 4	4011	
5 – 6	TDA 1022	
7 – 8	CA 3080	
9	4016	

CODE	TYPE	TRANSISTORS
T1 ÷ T8	NPN	BC 173
T12 - T13		
T9 ÷ T11	PNP	BC 415C

SHEET N 8–12 CST1337 — OFL
SHEET N 6–12 CST1278 — VIB
SHEET N 4–12 CST 1313 — OFU1
SHEET N 5 –12 CST1273 — OPE
SHEET N 4-12 CST 1313 — OPR1
SHEET N 11-12 F000683 — IAR
SHEET N 4–12 CST1289 — KVD, ACC
SHEET N 6-12 CST1278 — M2
SHEET N 11–12 CST 1274 — CHR, CHL

410CST1336

ROTARY SINPHONIC | SLOW FAST | CHORDS | TREBLE | TREBLE PRESETS — ROTARY EFFECT
VIBRATO DELAY | CHORDS | TREBLE | TREBLE PRESETS — VIBRATO - EFFECTS

SELECT. CL.6

410CST1272

SHEET N 11–12 CST 1274 — CHL
SHEET N 3–12 CST 1280 — SUL
SHEET N 7 – 12 CST 1280 — SLL
SHEET N 11–12 CST 1274 — CHR

Model	Object:	Sheet N. 9 - 12
Concorde 119	ROTARY EFFECT	Date 25 - 9 - 81

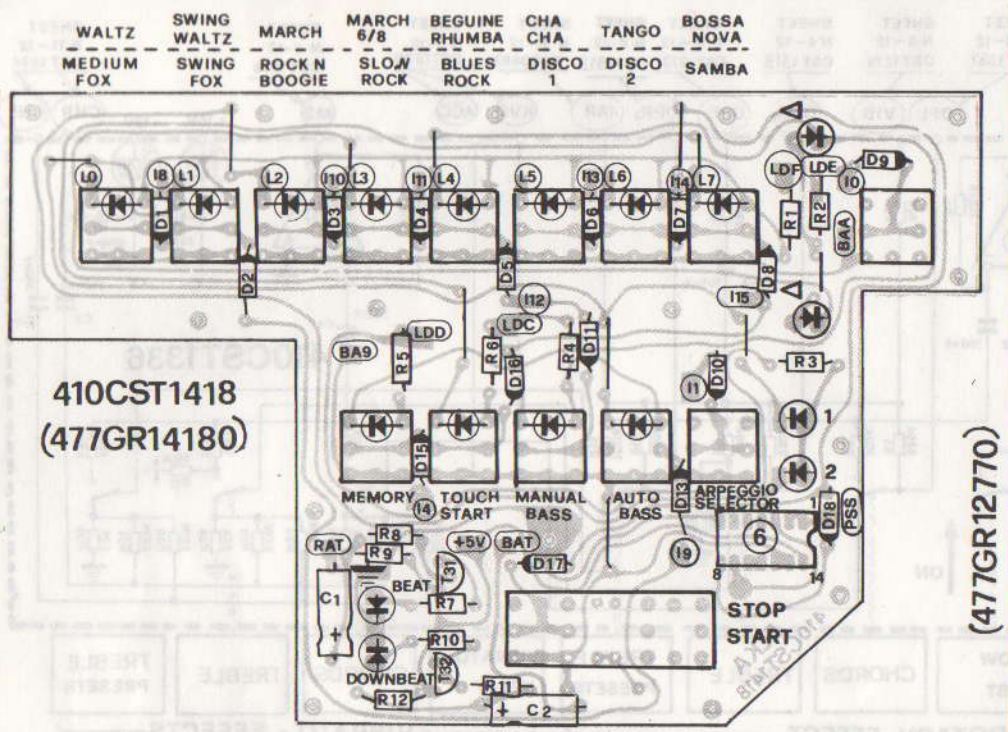

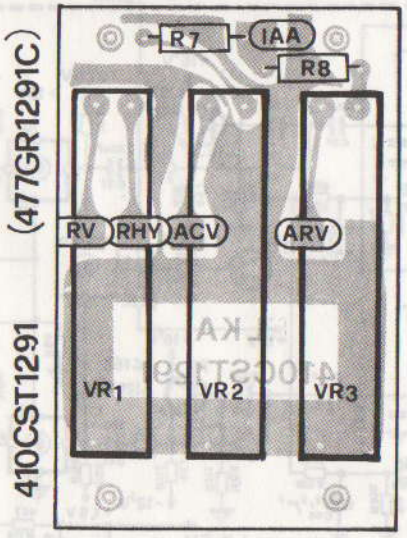

RHYTHM – PIANO – ARPEGGIO

410CST1277

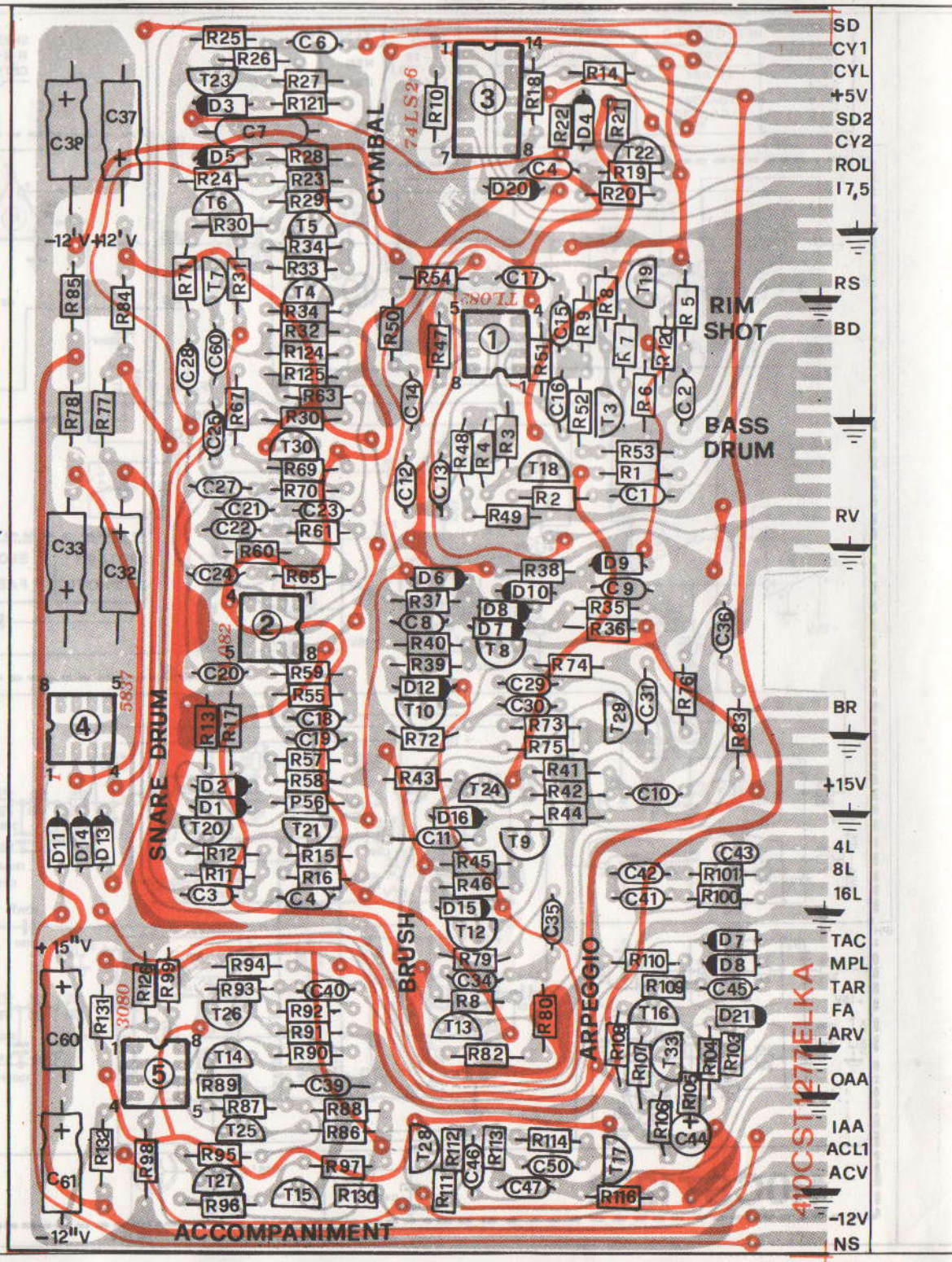

	Model	Object:	Sheet No 10a-12
	Concorde 119	Assembly of Printed Circuits	Date 8-4-82

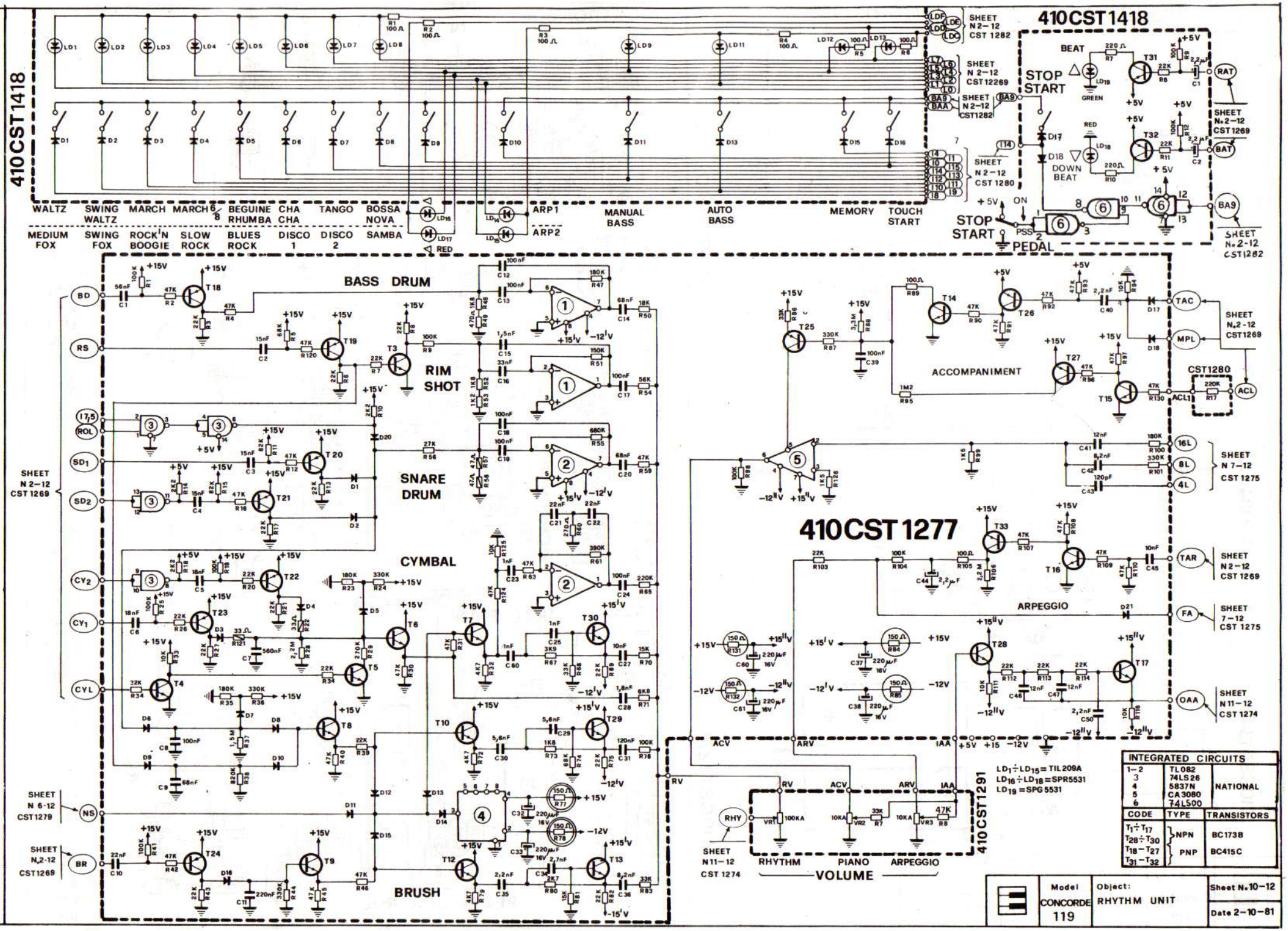
410CST1418
410CST1277
410CST1291
WALTZ
SWING WALTZ
MARCH
MARCH 6/8
BEGUINE RHUMBA
CHA CHA
TANGO
BOSSA NOVA
MEDIUM FOX
SWING FOX
ROCK'N BOOGIE
SLOW ROCK
BLUES ROCK
DISCO 1
DISCO 2
SAMBA
ARP1
ARP2
MANUAL BASS
AUTO BASS
MEMORY
TOUCH START
BEAT
STOP START
GREEN
DOWN BEAT
RED
ON
PEDAL
BASS DRUM
RIM SHOT
SNARE DRUM
CYMBAL
BRUSH
ACCOMPANIMENT
ARPEGGIO
RHYTHM
PIANO
ARPEGGIO
VOLUME
SHEET N 2-12 CST 1282
SHEET N 2-12 CST12269
SHEET N 2-12 CST1280
SHEET N 2-12 CST1269
SHEET N 7-12 CST 1275
SHEET N 2-12 CST 1269
SHEET 7-12 CST 1275
SHEET N 11-12 CST 1274
SHEET N 6-12 CST1279
SHEET N,2-12 CST1269
SHEET N 11-12 CST 1274
LD1÷LD15 = TIL209A
LD16÷LD18 = SPR5531
LD19 = SPG 5531
INTEGRATED CIRCUITS
1-2 TL082
3 74LS26
4 5837N
5 CA3080
6 74LS00
NATIONAL
CODE
TYPE
TRANSISTORS
T1÷T17 NPN BC173B
T28÷T30 NPN BC173B
T18-T27 PNP BC415C
T31-T32 PNP BC415C
Model CONCORDE 119
Object: RHYTHM UNIT
Sheet N.10-12
Date 2-10-81

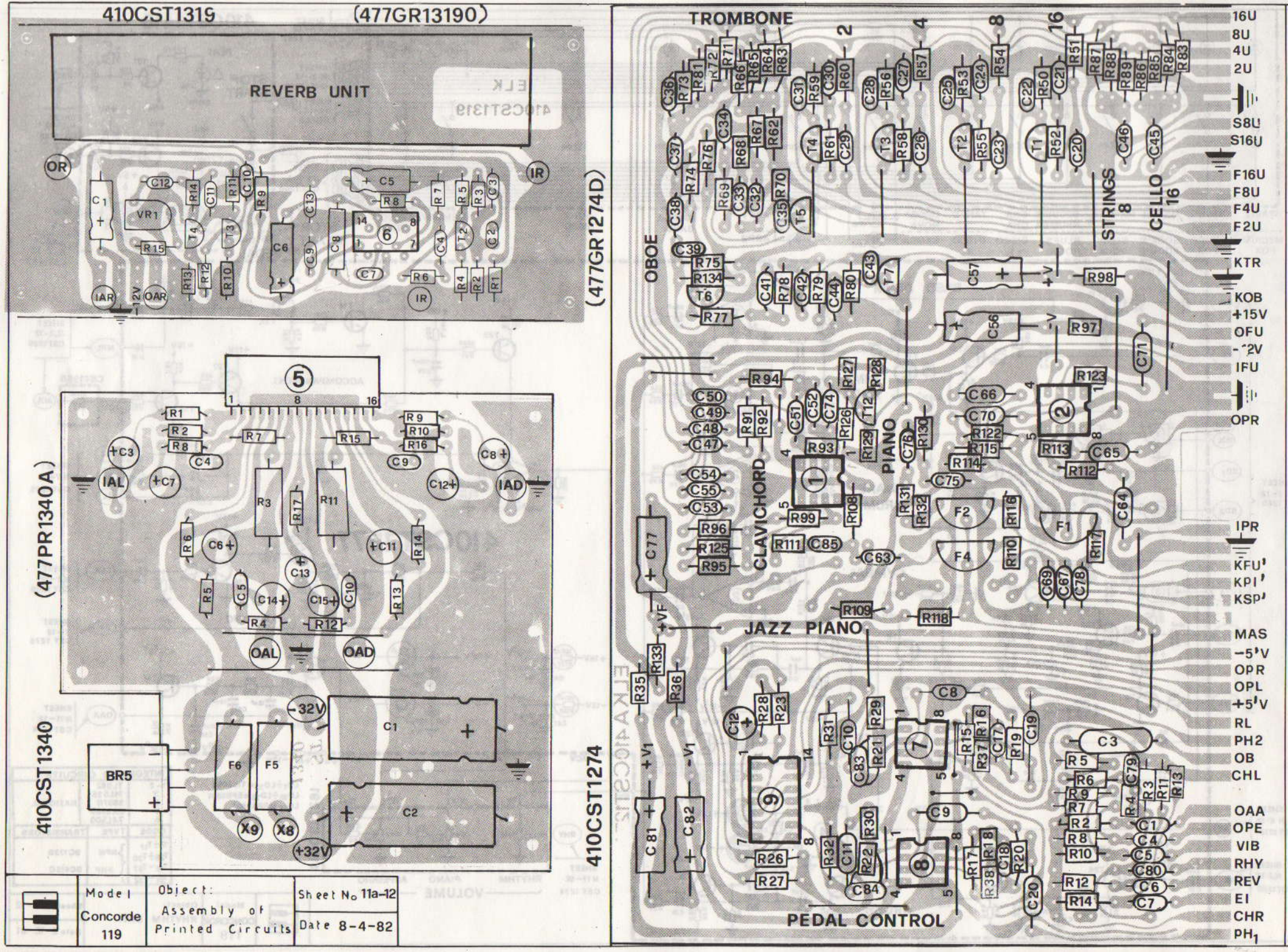

	Model	Object:	Sheet No. 11a-12
	Concorde 119	Assembly of Printed Circuits	Date 8-4-82

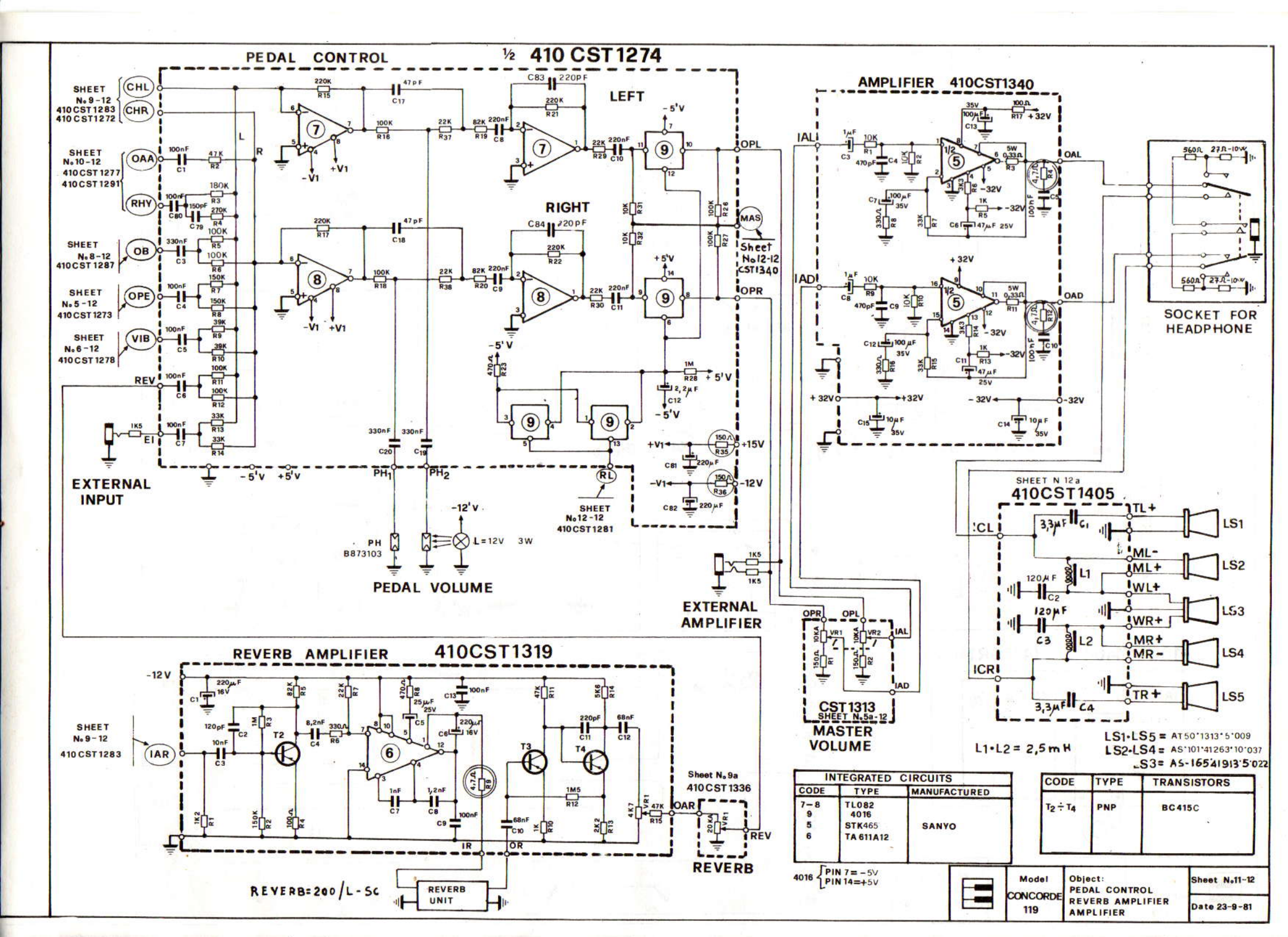

INTEGRATED CIRCUITS		
CODE	TYPE	MANUFACTURED
7-8	TL082	SANYO
9	4016	
5	STK465	
6	TA 611A12	

4016 { PIN 7 = -5V, PIN 14 = +5V }

CODE	TYPE	TRANSISTORS
$T_2 \div T_4$	PNP	BC415C

Model	Object:	Sheet No.11-12
CONCORDE 119	PEDAL CONTROL REVERB AMPLIFIER AMPLIFIER	Date 23-9-81

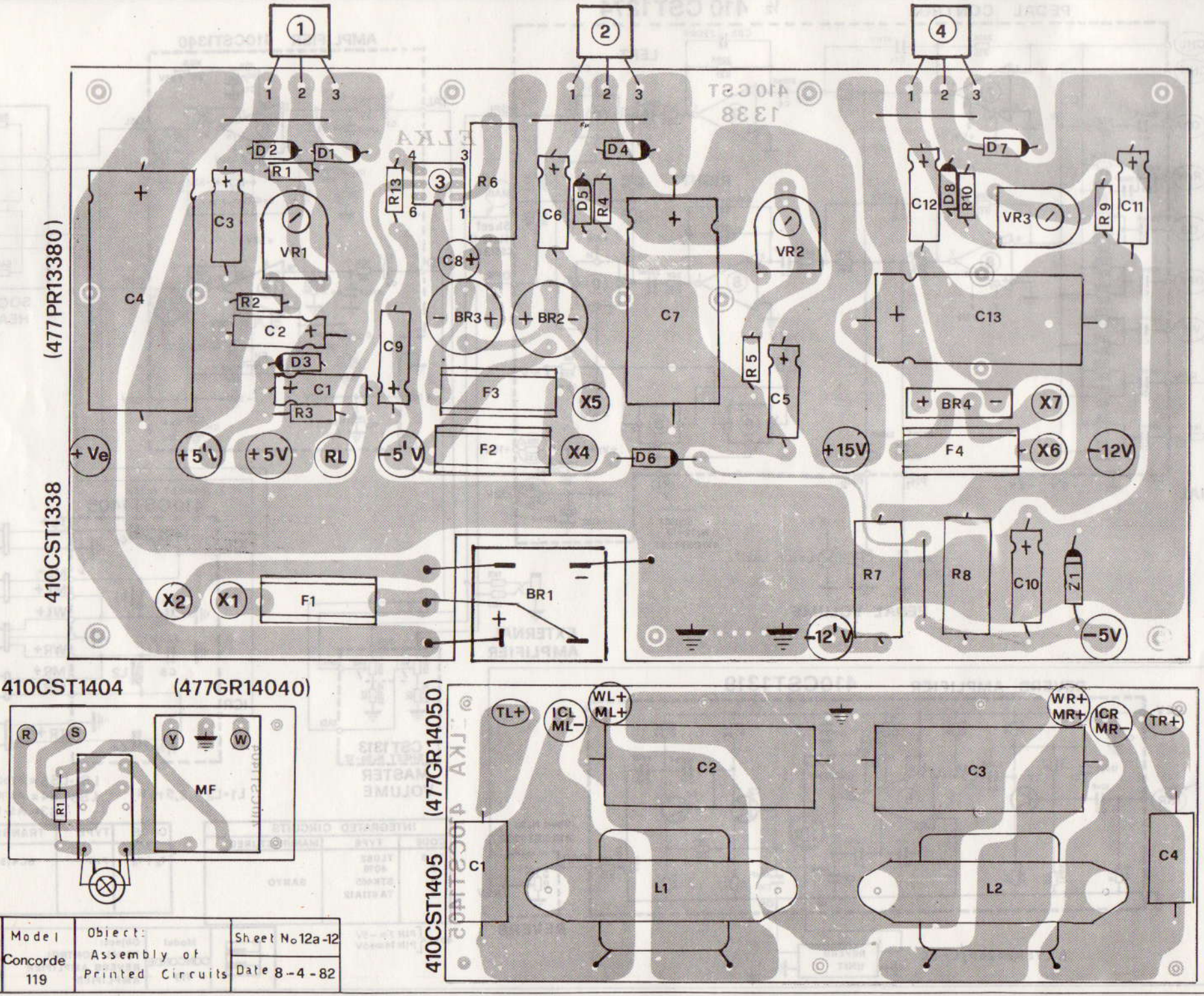
(477PR13380)
410CST1338
1
2
3
4
D2
D1
R1
D4
D7
C3
VR1
R13
R6
C6
D5
R4
C12
D8
R10
VR3
R9
C11
C4
C8
VR2
R2
BR3
BR2
C7
C13
C2
C9
D3
C1
R3
F3
X5
R5
C5
BR4
X7
+Ve
+5'V
+5V
RL
-5'V
F2
X4
D6
+15V
F4
X6
-12V
X2
X1
F1
BR1
R7
R8
C10
Z1
-12'V
-5V
410CST1404
(477GR14040)
R
S
Y
W
MF
R1
(477GR14050)
410CST1405
TL+
ICL
ML-
WL+
ML+
WR+
MR+
ICR
MR-
TR+
C2
C3
C1
C4
L1
L2
Model
Concorde
119
Object:
Assembly of
Printed Circuits
Sheet No 12a-12
Date 8-4-82

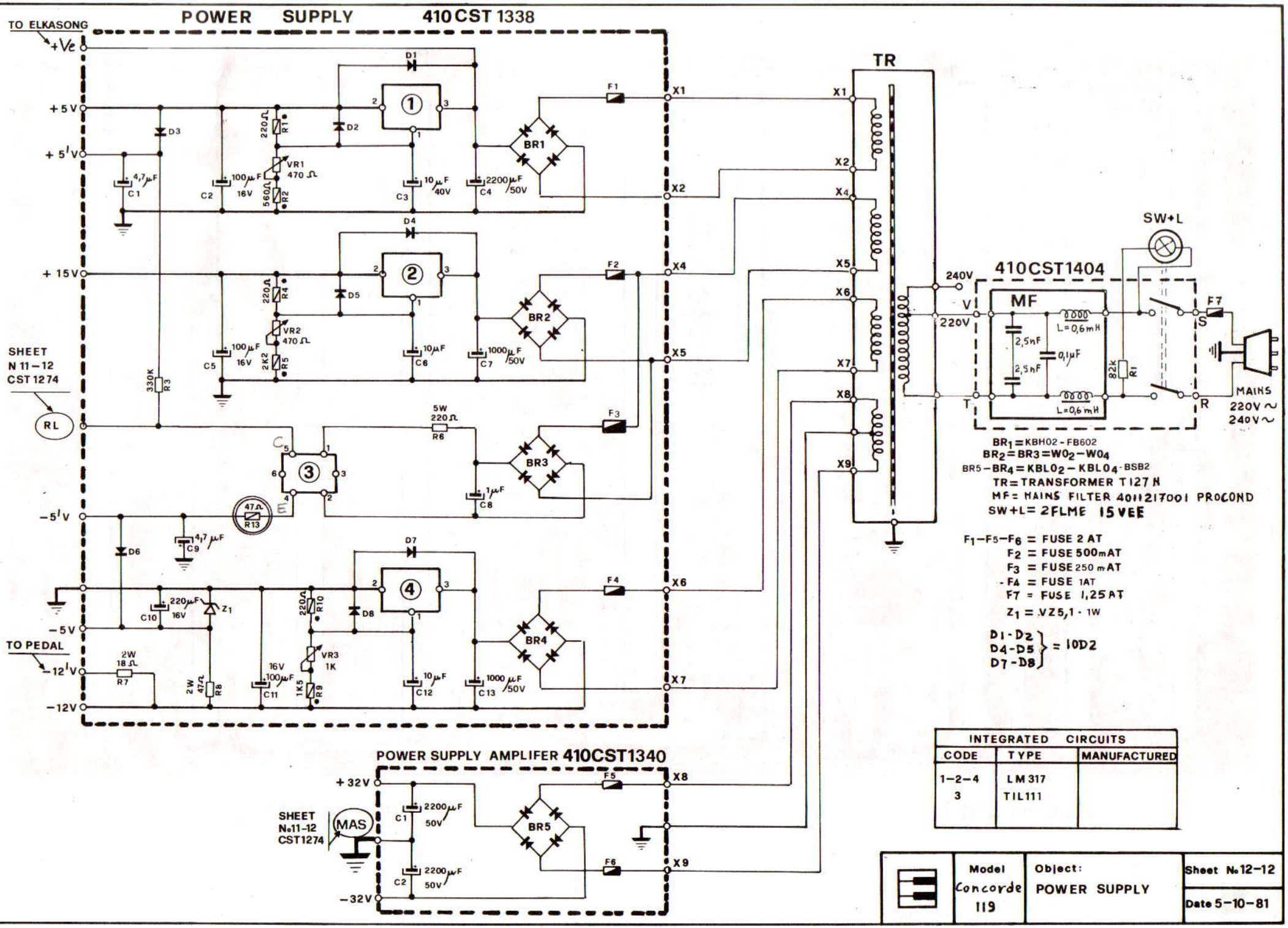
POWER SUPPLY 410CST 1338
TO ELKASONG
+Ve
+5V
+5'V
+15V
-5'V
-5V
TO PEDAL
-12'V
-12V
SHEET N 11-12 CST 1274
RL
D1
D2
D3
D4
D5
D6
D7
D8
BR1
BR2
BR3
BR4
F1
F2
F3
F4
X1
X2
X4
X5
X6
X7
C1 4,7µF
C2 100µF 16V
C3 10µF 40V
C4 2200µF 50V
C5 100µF 16V
C6 10µF
C7 1000µF 50V
C8 1µF
C9 4,7µF
C10 220µF 16V
C11 100µF 16V
C12 10µF
C13 1000µF 50V
R1 220Ω
R2 560Ω
R3 330K
R4 220Ω
R5 2K2
R6 5W 220Ω
R7 2W 18Ω
R8 2W 47Ω
R9 1K5
R10 220Ω
R13 47Ω
VR1 470Ω
VR2 470Ω
VR3 1K
Z1
POWER SUPPLY AMPLIFER 410CST1340
+32V
-32V
SHEET No11-12 CST1274
MAS
BR5
F5
F6
X8
X9
C1 2200µF 50V
C2 2200µF 50V
TR
X1
X2
X4
X5
X6
X7
X8
X9
410CST1404
240V
220V
MF
L=0,6mH
2,5nF
0,1µF
2,5nF
82k R1
F7
SW+L
S
T
R
MAINS 220V~ 240V~
BR1=KBH02-FB602
BR2=BR3=W02-W04
BR5-BR4=KBL02-KBL04-BSB2
TR=TRANSFORMER T127N
MF= MAINS FILTER 401217001 PROCOND
SW+L= 2FLME 15VEE
F1-F5-F6 = FUSE 2 AT
F2 = FUSE 500mAT
F3 = FUSE 250 mAT
F4 = FUSE 1AT
F7 = FUSE 1,25AT
Z1 = VZ5,1 - 1W
D1-D2 } = 10D2
D4-D5 }
D7-D8 }
INTEGRATED CIRCUITS
CODE | TYPE | MANUFACTURED
1-2-4 | LM317
3 | TIL111
Model Concorde 119
Object: POWER SUPPLY
Sheet No.12-12
Date 5-10-81

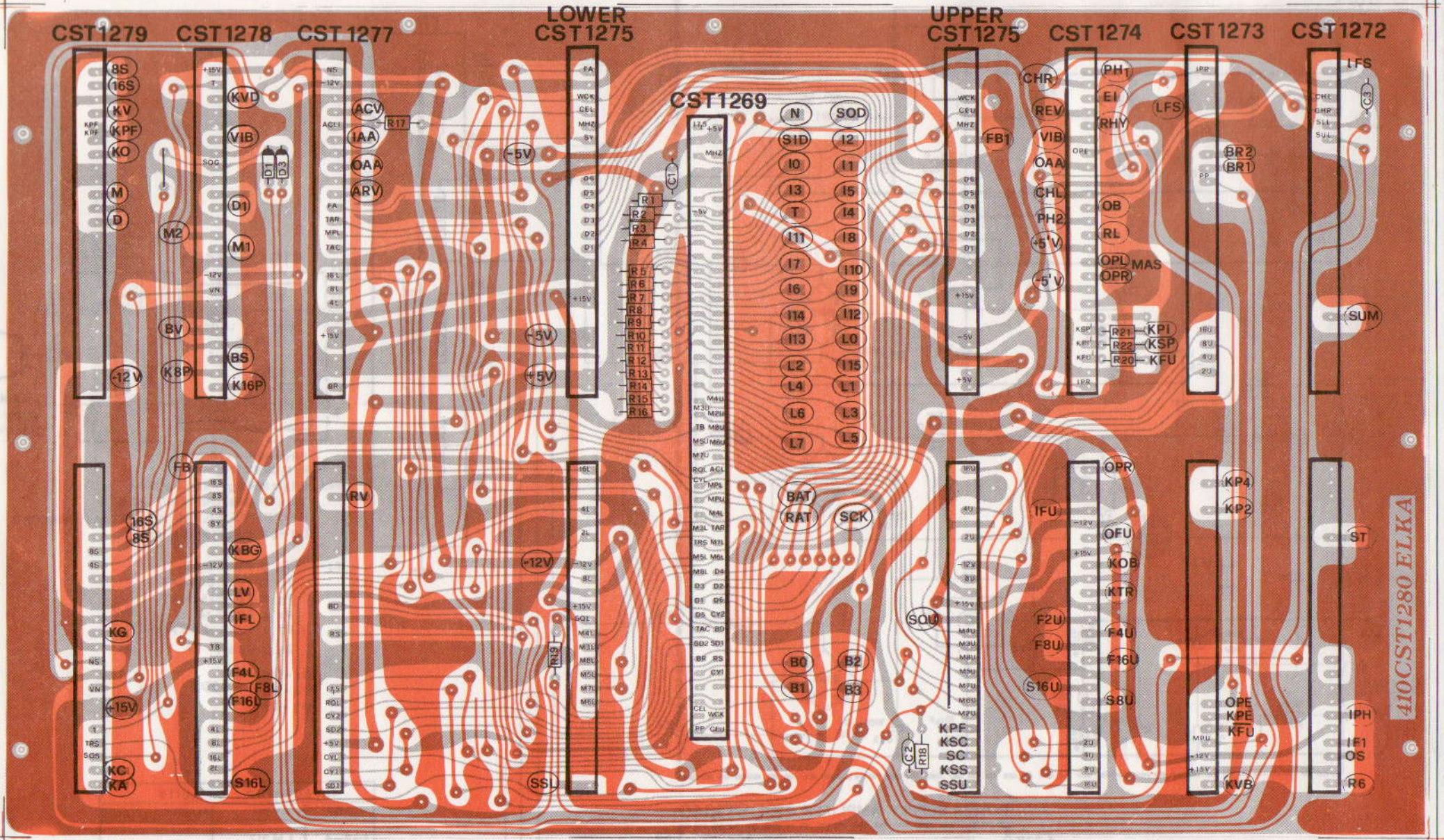

410CST1280 (477GR12801)

	Model Concorde 119	Object: Assembly of Printed Circuits	Sheet No12b-12
			Date9-1-82

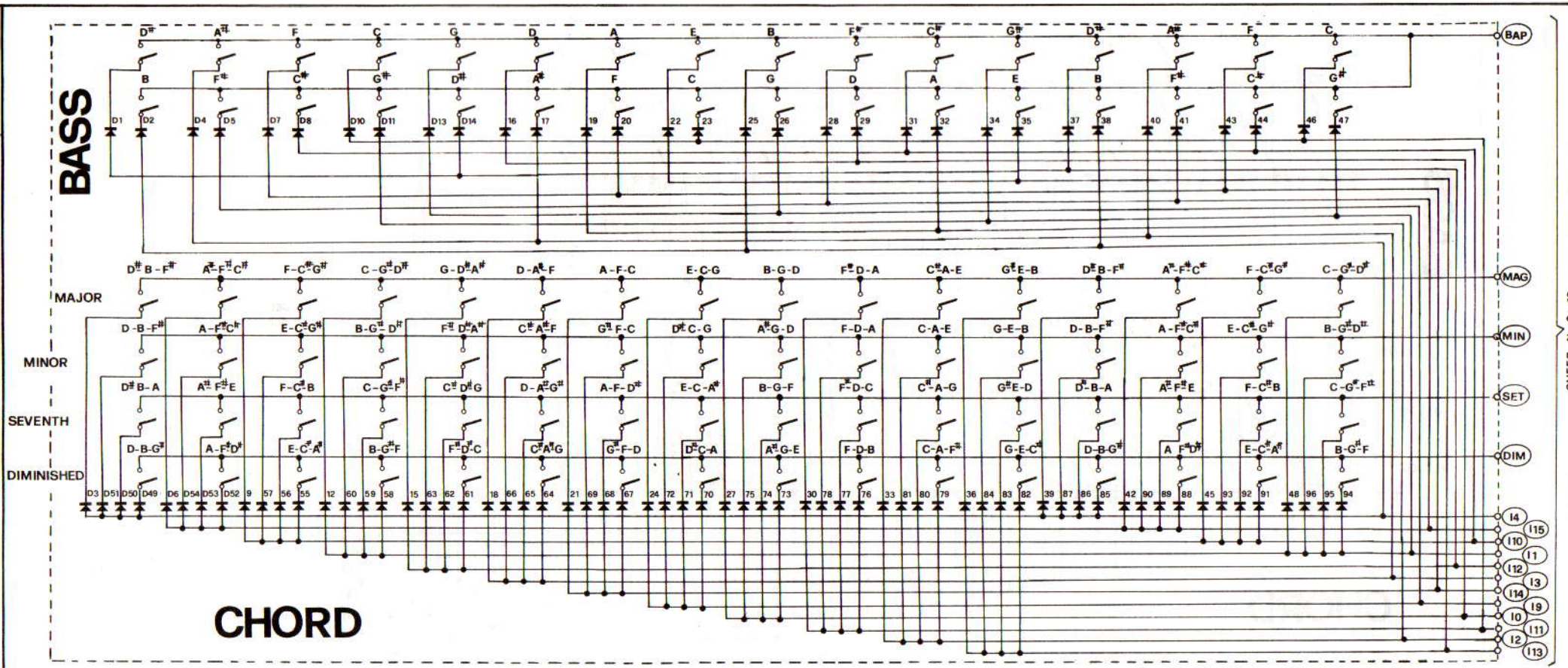

COPPER SIDE

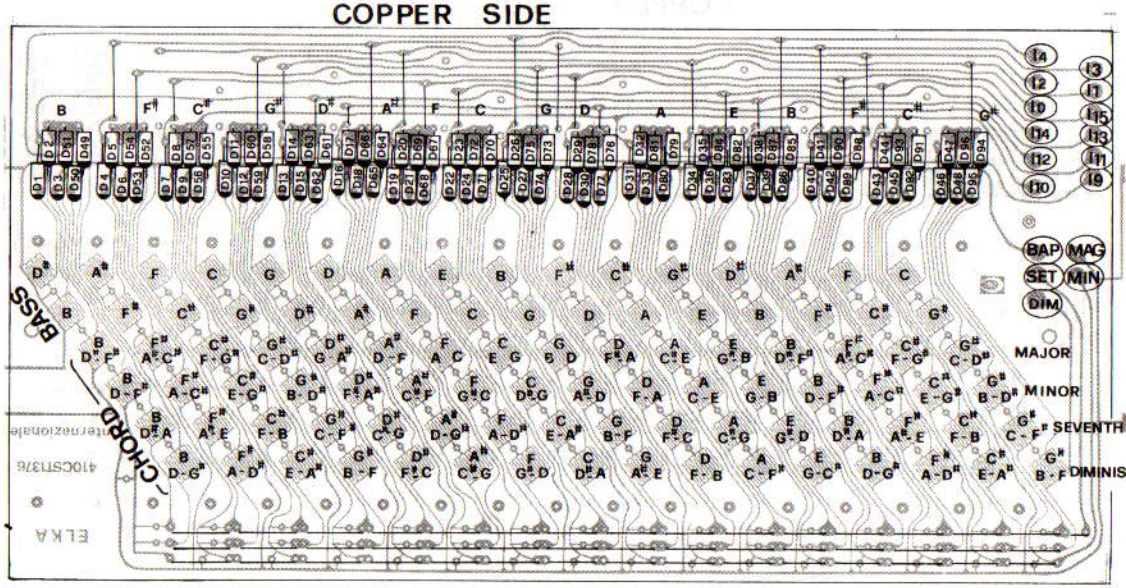

410CST1376

INTERNATIONAL SYSTEM

	Model	Object:	Sheet N.12c - 12
	Concorde 119		Date 12 - 2 - 82

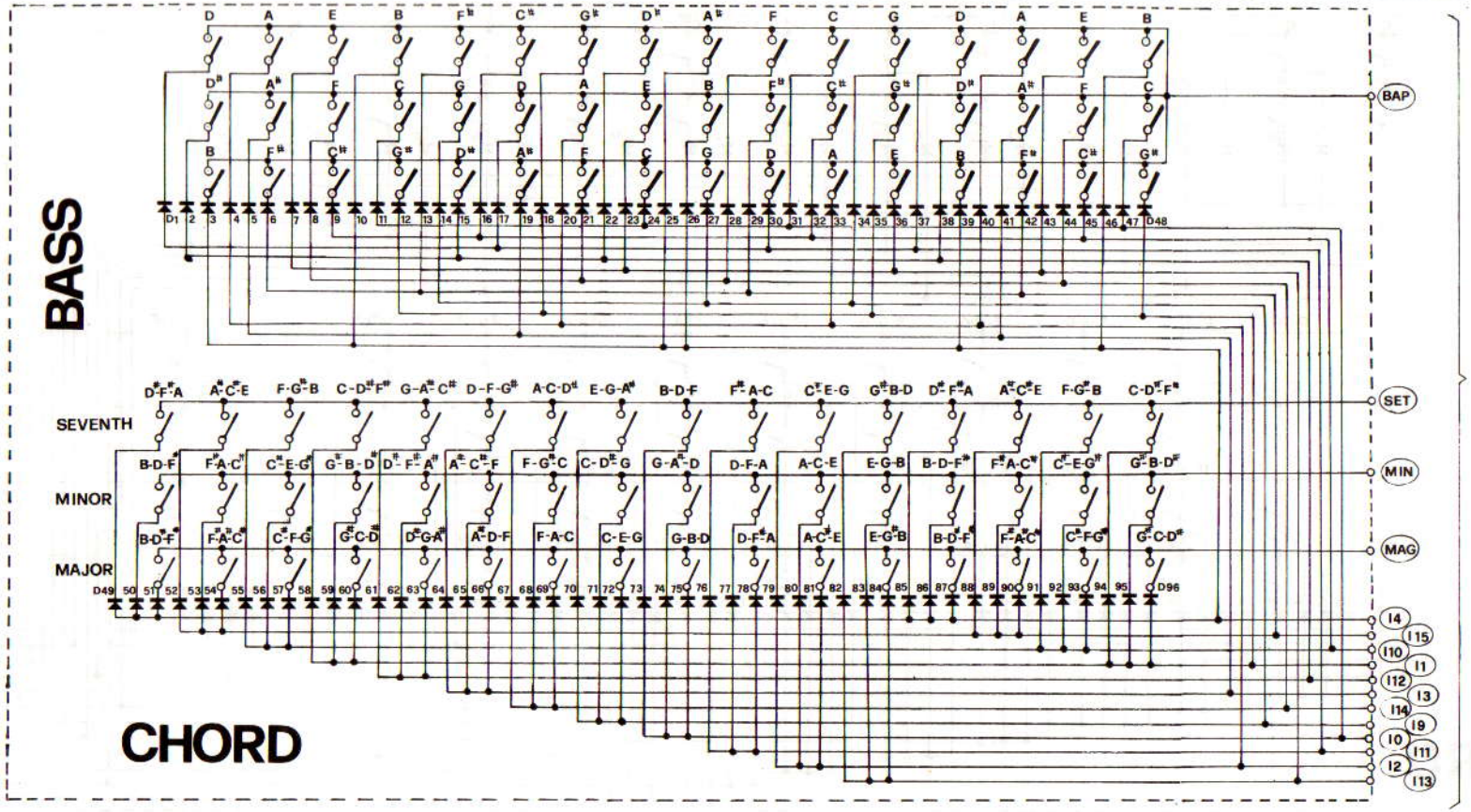

410CST1375

DUTCH SYSTEM

COPPER SIDE

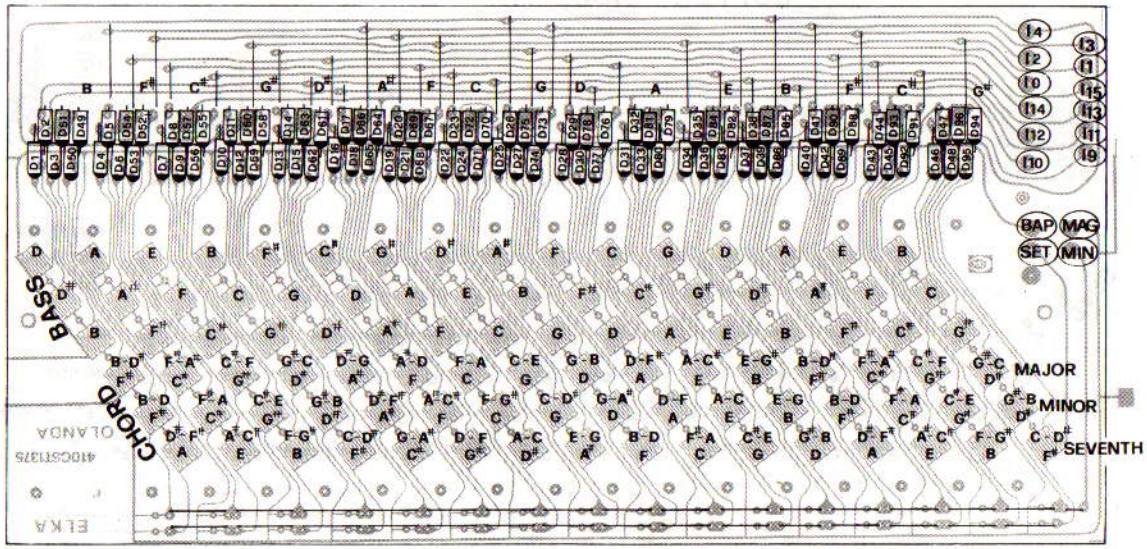

	Model	Object:	Sheet N°12d-12
	Concorde 119		Date 11-2-82

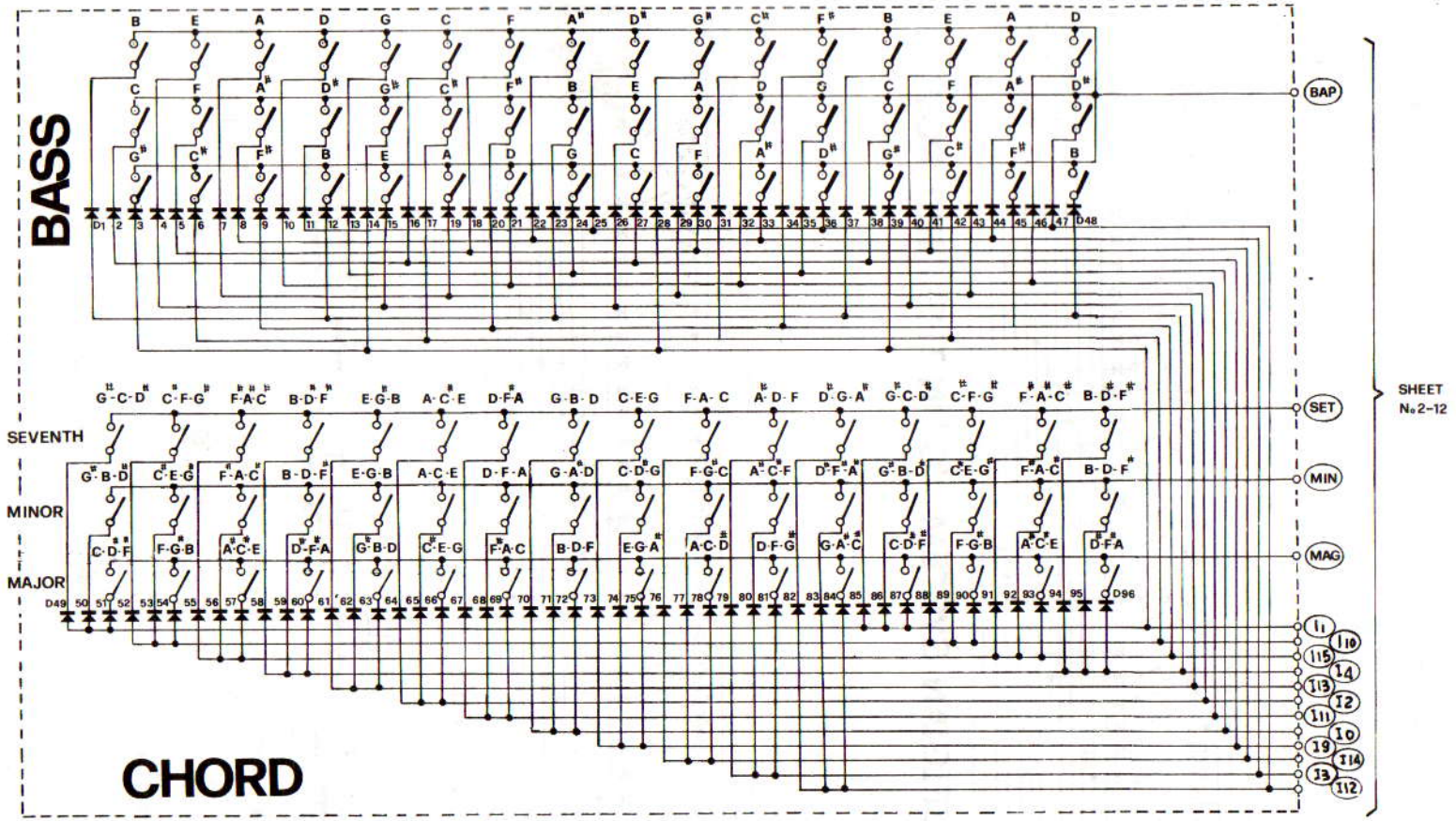

COPPER SIDE

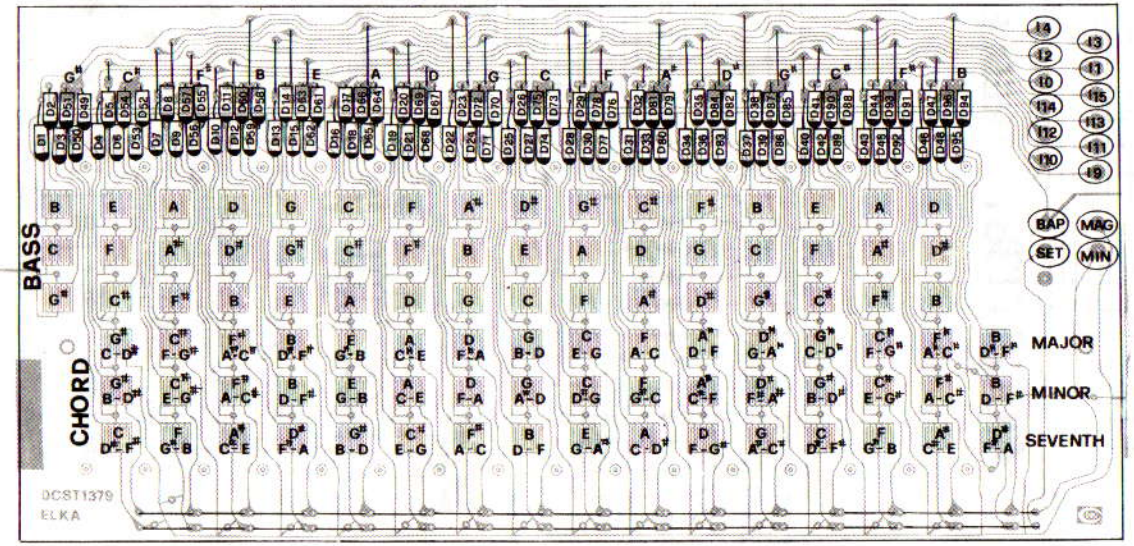

410CST1379

BELGIAN SYSTEM

	Model	Object:	Sheet No. 12e-12
	Concorde 119		Date 11-2-82

Model: Concorde 119

Object:

Date 11-2-82

Sheet N°12f-12

COPPER SIDE

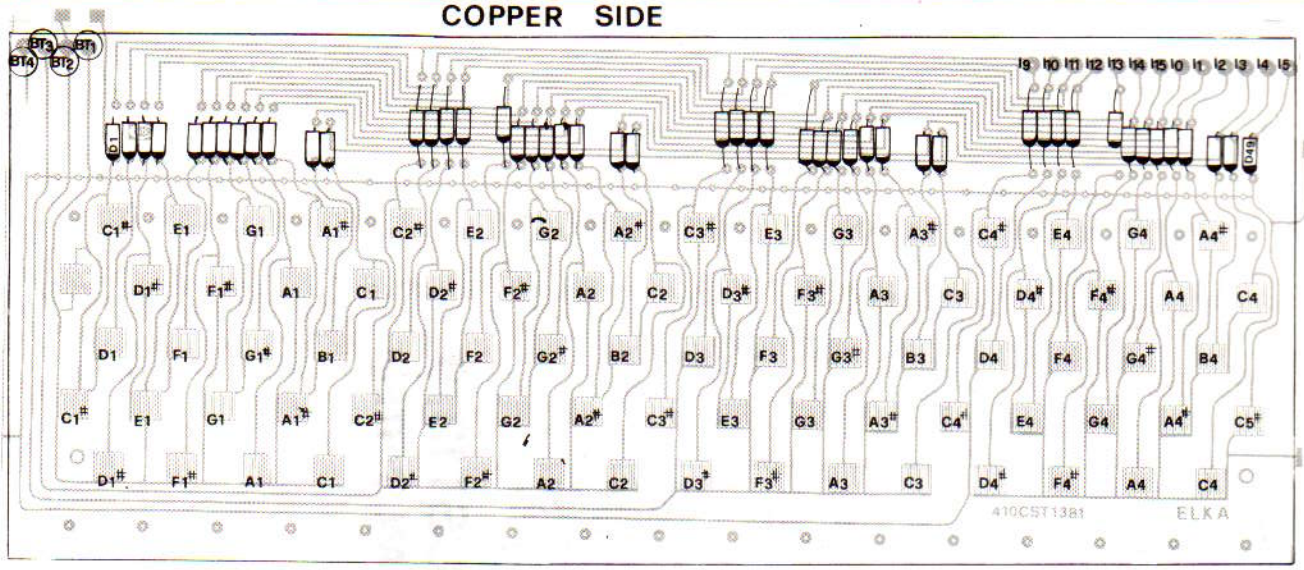

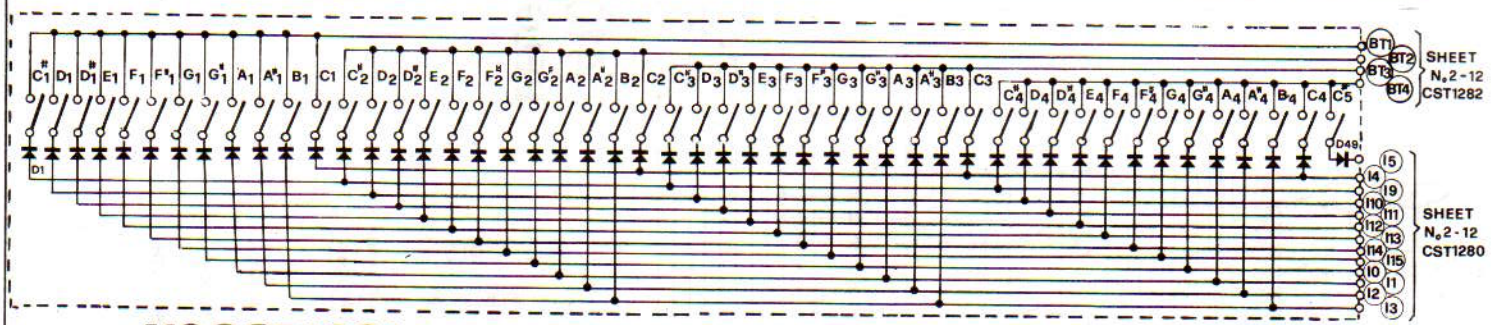

410CST1381 TREBLE BELGIAN SYSTEM "C" IN THE FIRST ROW

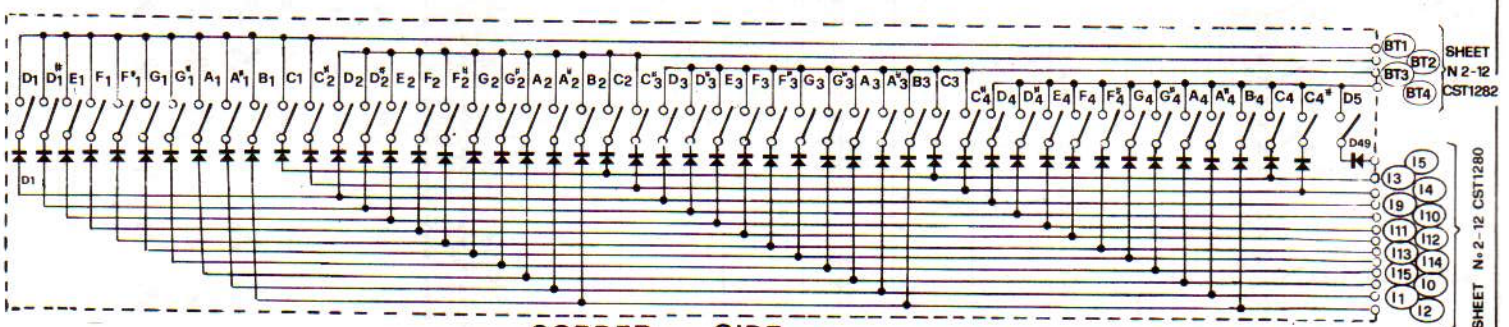

COPPER SIDE

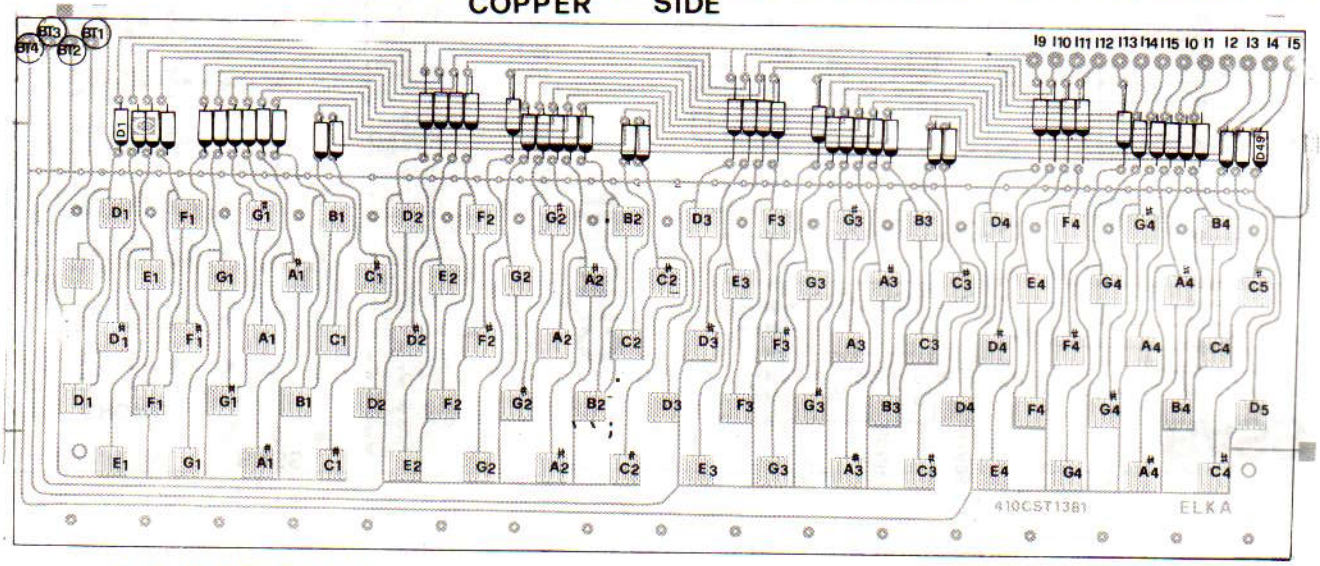

410CST1381 TREBLE FINNISH SYSTEM "C" IN THE THIRD ROW

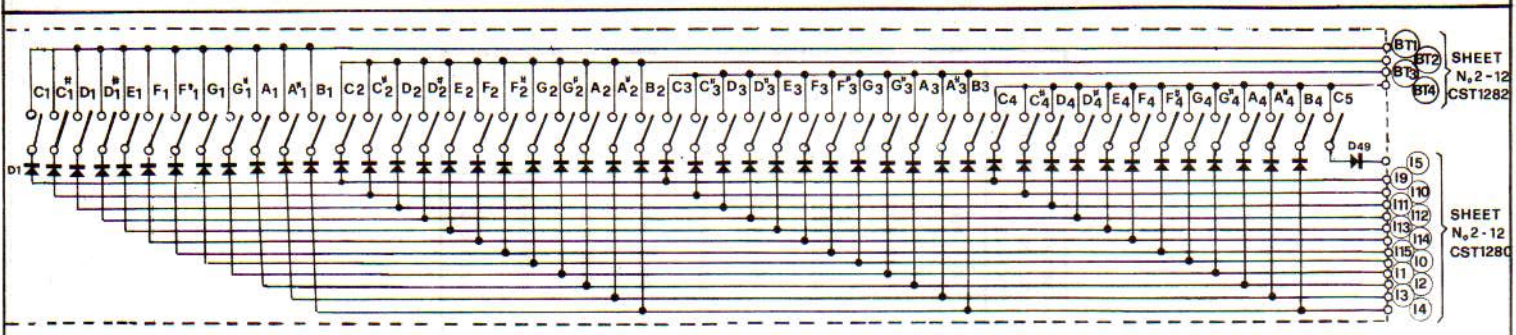

COPPER SIDE

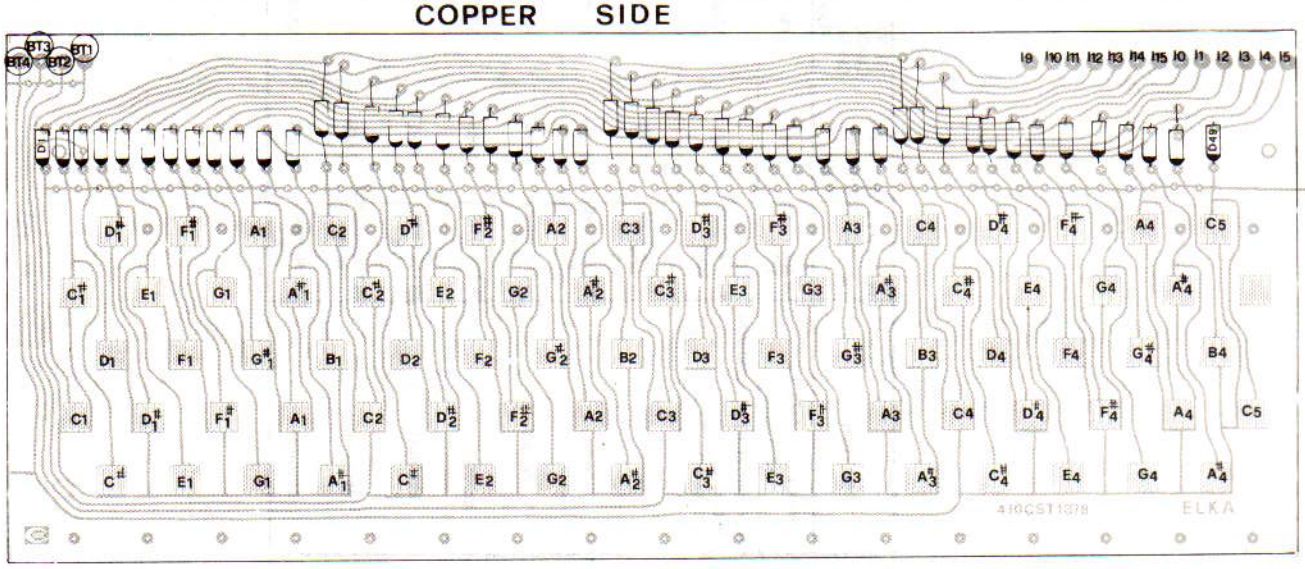

410CST1378 TREBLE BELGIAN SYSTEM "C" IN THE SECOND ROW

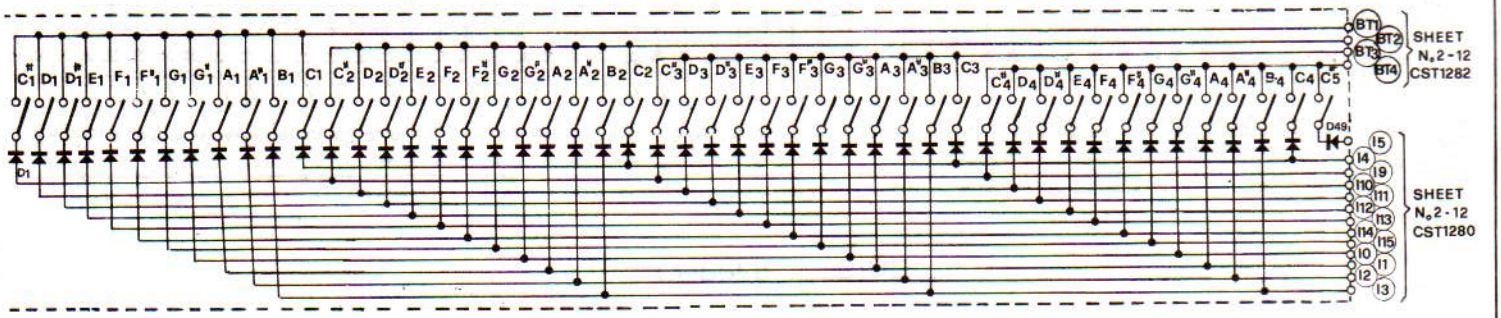

COPPER SIDE

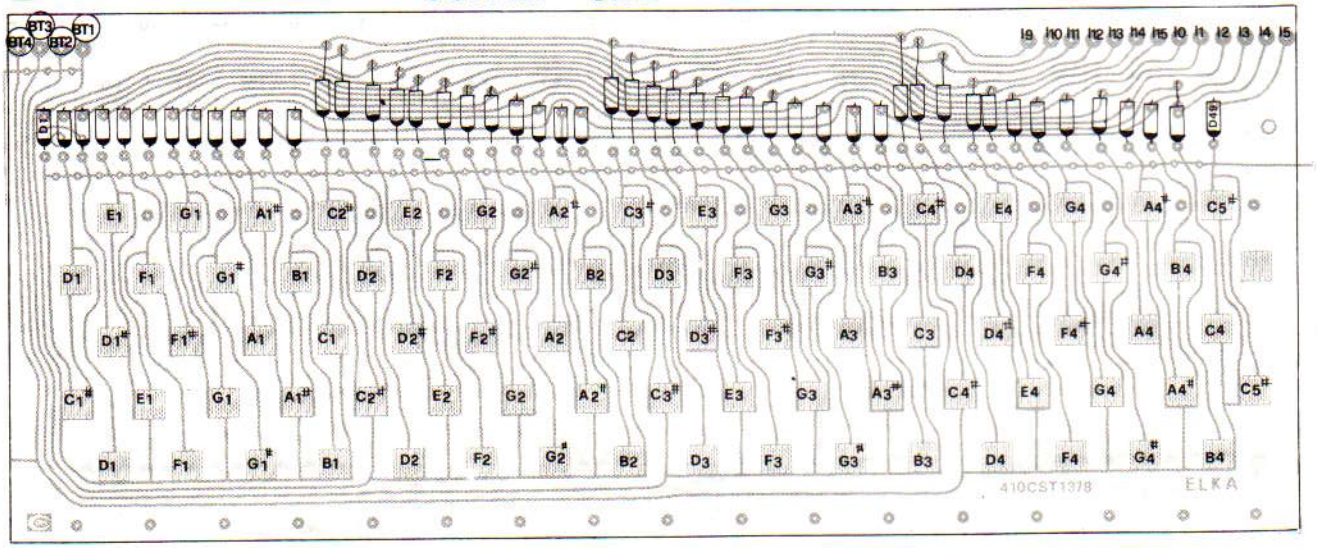

410CST1378 TREBLE BELGIAN SYSTEM "C" IN THE THIRD ROW

Model Concorde 119

Object:

Date 11-2-82

Sheet N° 12g-12

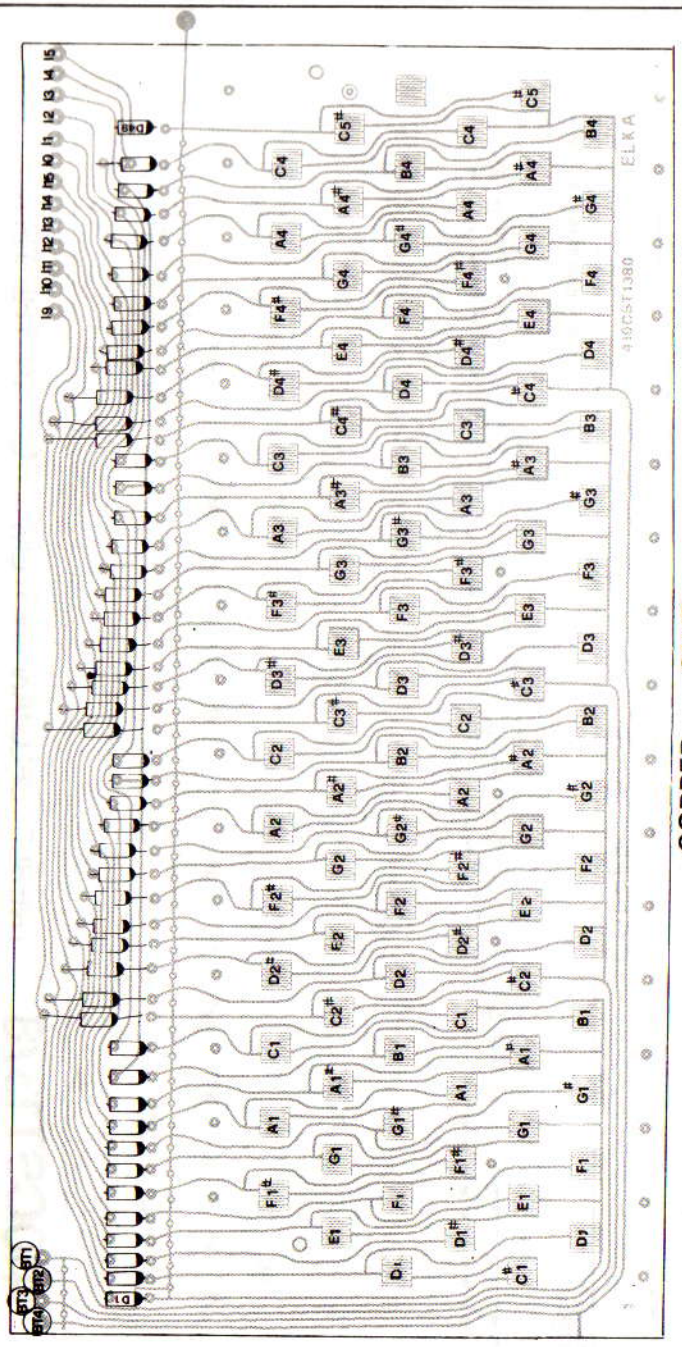

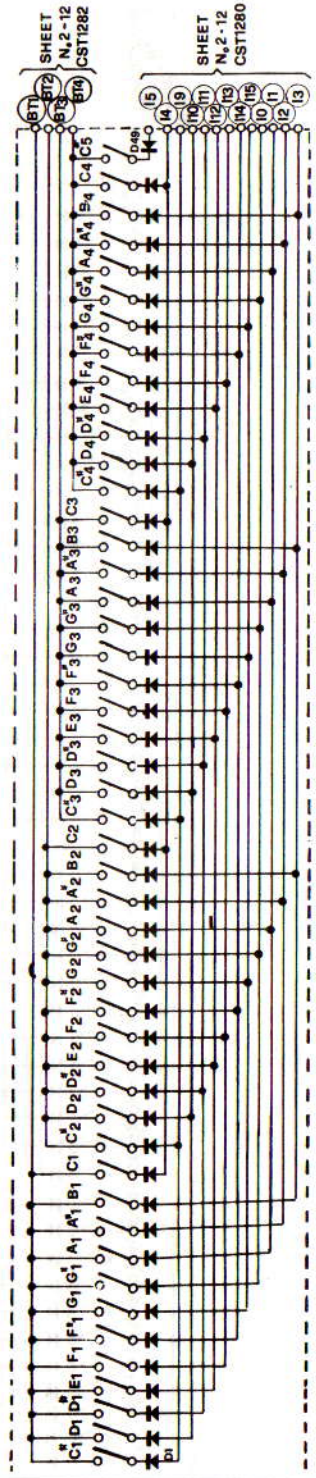

410CST1380 JUGOSLAVIA SYSTEM "C" IN THE THIRD ROW

NATION	POSITION OF "C"	PRINTED CIRCUIT TREBLE	PRINTED CIRCUIT CHORD AND BASS	MEMORY COLOR MCM 2532	MEMORY CODE MCM2532
FRANCE - LUXEMBURG PORTUGAL	"C" IN THE FIRST ROW	1321	1320	GOLD-RED	C# 3 + 3
ITALY - SWITZERLAND - DENMARK SWEDEN - USA LUXEMBURG	"C" IN THE FIRST ROW	1381	1376	GOLD - BLUE	C# 2 + 4
HOLLAND	"C" IN THE THIRD ROW	1378	1375	GOLD - RED	C# 3 + 3
NORWAY	"C" IN THE THIRD ROW	1378	1376	GOLD-BLUE	C# 2 + 4
FINLAND	"C" IN THE THIRD ROW	1381	1376	GOLD - WHITE	D 2 + 4
JUGOSLAVIA	"C" IN THE THIRD ROW	1380	1375	GOLD - RED	C# 3 + 3
BELGIUM	"C" IN THE FIRST ROW	1381	1379	GOLD - RED	C# 3 + 3
BELGIUM	"C" IN THE SECOND ROW	1376	1379	GOLD - GREEN	C 3 + 3
BELGIUM	"C" IN THE THIRD ROW	1378	1379	GOLD-RED	C# 3 + 3

	Model	Object:	Sheet N.12h-12
	Concorde 119		Date 11-2-82

ELKA

ERRATA CORRIGE

MODEL Concorde 119

Sheet No.	Date	Printed Circuit	MODIFICATIONS	
			Before	Now
10/12	30/09/83	CST1277	T17 - T28 = NPN BC 173 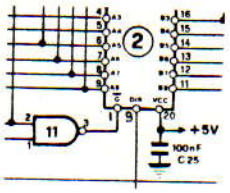	T17 - T28 = NPN BC 550 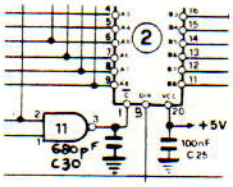
2/12	15/12/83	CST1269		

The following modification starts with the instrument having serial number

EUROPE
AMERICA