HD125

High Frequency Driver

Key Features

1 inch exit throat
109 dB SPL 1W / 1m average sensitivity
25,4 mm (1 in) edgewound aluminum voice coil
50 Watt program power handling
Low weight, easy mounting and handling structure
Usable in two way or multiway systems



General Description

The HD125 1 inch exit HF unit has been designed as the natural evolution of the industry standard HD120 compression driver. It delivers an unmatched combination of extended linear frequency response and very high efficiency.
The HD125 diaphragm assembly is made in proprietary treated polyethylene material. This design maintains the minimum resonance frequency point value at 1600 Hz, extending the frequency response in the mid region when compared to HD120 compression driver.
The design of diaphragm and its surround in polyester material allow a best movement and stress control; the special radial ribs increase stiffness avoiding uncontrolled vibration modes in the usable frequency range.
An edge-wound aluminum voice coil, wounded on proprietary treated Nomex, completes diaphragm assembly. Thanks to its physical properties, the voice coil former shows 30% higher value of tensile elongation at working operative temperature (200°C) when compared to Kapton. This plus is capable to keep properly energy transfer control to the dome in real working conditions. Moreover, this particular former material is suitable to work also in higher moisture contents environments.
The polypropylene phase plug is the result of a meticulous design exercise. Its shape assures the correct acoustic impedance of the radiating dome, reducing distortion levels across a very wide frequency range. At the end, it results in a smooth coherent wavefront in the horn entrance, high thermal stability and manufacturing consistency.
The HD125 compact size and lightweight ceramic magnet assembly has been designed to obtain 16 KGauss in the gap.

0421M8H100 8 Ohm
0421M6H100 16 Ohm

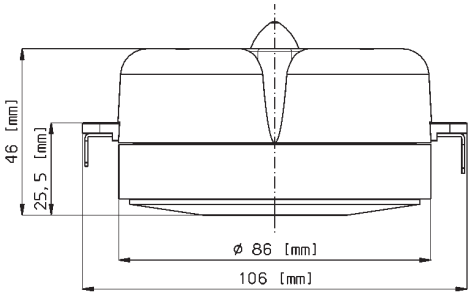

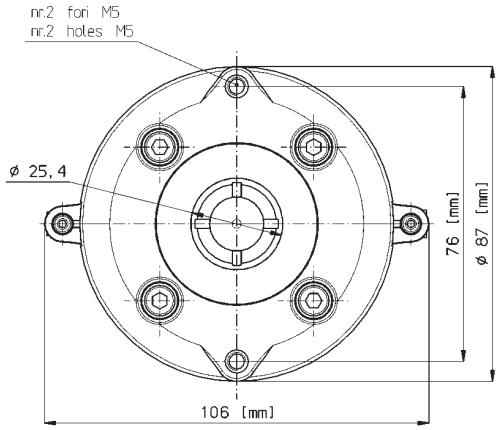

info@eighteensound.com
www.eighteensound.com

HD125
High Frequency Driver

GENERAL SPECIFICATIONS

THROAT DIAMETER	25,4 mm (1 in)
RATED IMPEDANCE	8 ohm
DC RESISTANCE	5,7 Ohm
MINIMUM IMPEDANCE	8 ohms 5000Hz
AES POWER (1)	25 W above 2,5 kHz
PROGRAM POWER (2)	50 W above 2,5 kHz
SENSITIVITY(1W@1M) (3)	109 dB
FREQUENCY RANGE	2 kHz ÷ 18 kHz
RECOMM. XOVER FREQUENCY	2500 Hz (12dB/oct slope)
DIAPHRAGM MATERIAL	Polyester
VOICE COIL DIAMETER	25,4 mm (1 in)
VOICE COIL WINDING MATERIAL	Edge-wound aluminum
MAGNET MATERIAL	Ferrite
FLUX DENSITY	1,65 T
BL FACTOR	3,5 N/A
POLARITY	Positive voltage on + terminal gives positive pressure in the throat

MOUNTING INFORMATIONS

Overall diameter	87 mm (3,4 in)
Mounting holes diameter	2 M5 at 180 degrees
Bolt circle diameter	76 mm (3 in)
Total depth	46 mm (1,8 in)
Net weight	0,8 Kg (1,77 lb)
Shipping weight	0,9 Kg (1,99 lb)
CardBoard Packaging dimensions	90x90x70 mm(3,5x3,5x2,8 in)

HD125 MEASURED WITH 1W INPUT ON RATED IMPEDANCE AT 1MT DISTANCE ON AXIS FROM THE MOUTH OF HORN XT120

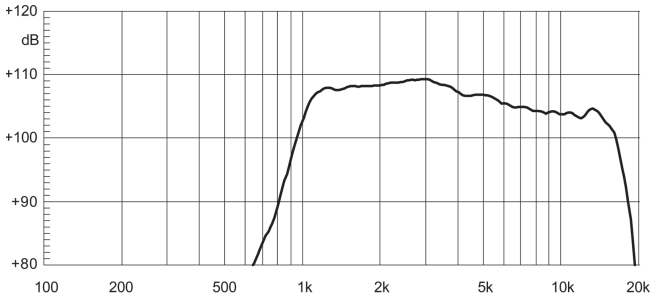

FREE AIR IMPEDANCE MAGNITUDE CURVE

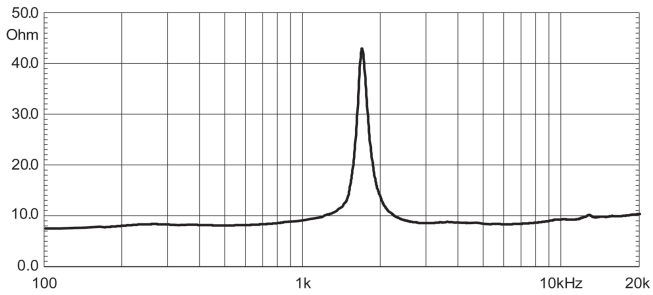

NOTES

(1) AES power rating is tested with a pink noise input having a 6 dB crest factor for two hours duration within the specified range. Power calculated on minimum impedance.

(2) Program power rating is defined as 3 dB greater than AES rating, and is a conservative expression of the transducer ability to handle music program material.

(3) Sensitivity is measured on 1 W input on rated impedance at 1 m on axis from the mouth of XT 120 horn, averaged in the 3 kHz octave band

Eighteen Sound engages in research and product improvement. New materials and design refinements can be introduced into existing products without notice.