PAM 960/560/360 - TESTING RULES

PRELIMINARY:

GROUND LINK Testing. Verify that when the switch is at the ON position there is continuity between the chassis ground and the speakers ground terminal and that the opposite happens at the OFF position. Leave it at ON.

Put the power amplifier in stereo mode. We will need, at least, a 1500VA variac for our tests.

Connect an ammeter (10A DC scale) in place of one of the fuses of the module in which the tests will be made. Put the oscilloscope probe between TP-GND.

SET UP

Unplug the fuses of the module that we are NOT setting up. Connect the power amplifier mains cable to the output of the variac. Set the variac output at 0V.

Switch the power amplifier on,with no load or signal. Turn the variac up progressively step by step until you reach 220V. Make sure the module's current does never exceed 0.8A. Once the circuit is stable make sure the current is 350mA/210mA/140mA and the symmetry (measured up with the oscilloscope probe) is ≤50mV. If necessary, adjust CURRENT (5K) and SYMMETRY (470Ω) untill you get the above mentioned values.

Test the operational amplifier power supply (±18V) ±1V.

Put the fuse back into the module (with the power amplifier turned off) and repeat the same procedure for the other channel.

CROSS DISTORTION:

Introduce, by means of a signal generator, a level of 100mV RMS at 1kHz and check there is no cross distortion at the amplifier output (attenuators at 0dB position).

MOSFETS CONDUCTION:

By using a signal generator introduce a level of 0.5V at 1kHz and load the amplifier with 4Ω. Check that all MOSFETs are conducting approximately the same current level (measure this current with the oscilloscope probe by placing it on the 0,22Ω source resistances). The maximum conduction difference between MOSFETs should be ±100mV. When making this test be sure the oscilloscope ground is not connected to any other place of the circuit when making the reading; only to the 0,22Ω resistance. Else you could produce a shortcircuit between two points of the circuit and therefore a very important damage.

POWER:

Verify the amplifier's power at 8 and 4Ω.
Maintain the mains voltage at 220V by means of the variac.
Check that the following is true at close-to-clip point:

	PAM 960	PAM 560	PAM 360
Vin≈1VRMS/ Vo 4Ω ≥	42.0V RMS	32.0V RMS	26.5V RMS
Vin≈1VRMS/ Vo 8Ω ≥	46.0V RMS	37.0V RMS	30.5V RMS

FREQUENCY RESPONSE:

0.5V input signal. Verify frequency response at 20Hz/2kHz/20kHz. We must get the same signal output for the actual load at any of these frequencies. Set the frequency at 50kHz; the output level, should not decrease more than 1 or 2 dB and there should not be any noticeable distortion.

CLIPPING AT 1KHz:

Introduce such a signal that the amplifier is just about to clip.
Measure the voltage up at the output (over the load) and check that when the voltage decreases between 0.5 and 1 dB the clipping LEDs stop lighting. Check that each LED corresponds to its fader.

DC OUT:

For this test you must disconnect the load from the amplifier.

Introduce a 1V signal at ≤5Hz with the generator. Turn the output of the generator up untill the protection relays open and close.

MONO-STEREO:

Make this test with a load of 8Ω connected between left and right channels' red terminals.

Set the MONO-STEREO switch at MONO. Verify that the fader of channel 1 is operating while the one from channel 2 is NOT operating. Check the signal cut over the load is clean. Set the amplifier back to STEREO mode.

PROTECTIONS:

Disconnect one of the cables which are usually plugged to the thermals and check that the THERMAL LED is lighting up and the relay opens its contacts. Plug a functions generator connected to the amplifier input,select 1V RMS scale, leave the amplitude control at its minimum and leave at the OFF position. Connect a load of 0,5Ω/200W. Make sure we have a mains voltage of 220V. Connect the oscilloscope in parallel with the load (5V/div. scale). Set the generator at the ON position and slowly turn the amplitude up while checking, at the same time, that the output voltage is limited in both the positive and negative half-cycles between:

PAM 960: ±10V and ±16V peak.
PAM 560: ± 6V and ±10V peak.
PAM 360: ± 4V and ± 7V peak.

This voltage jump will happen as we apply more signal to the input through the generator's level control and it shows the transition from the B Zone to the C Zone in the figure we saw before about the theory of the protections operation. When you perform this measure you must also control the mains voltage by means of the variac, reducing it if necessary to be able to cleanly watch the jump from one level to the next.

In order to work in the A Zone we will use a load of 0,22Ω/40W. Before connecting the load, set the generator at the OFF position and select the 300mV RMS scale, leaving the amplitude control at its minimum. Load the amplifier output with 0,22Ω and connect the oscilloscope probe in parallel with it. Connect the generator and slowly turn the amplitude up while verifying that the signal over the load is not higher than:

PAM 960: ±4V peak.
PAM 560: ±3V peak.
PAM 360: ±2V peak.

If there is a level jump happening when we increase the input signal, this can be the transition point from the A Zone to the B Zone. Change a little bit the variac voltage, slowly increasing it untill the signal cut is clean and inside the indicated values.

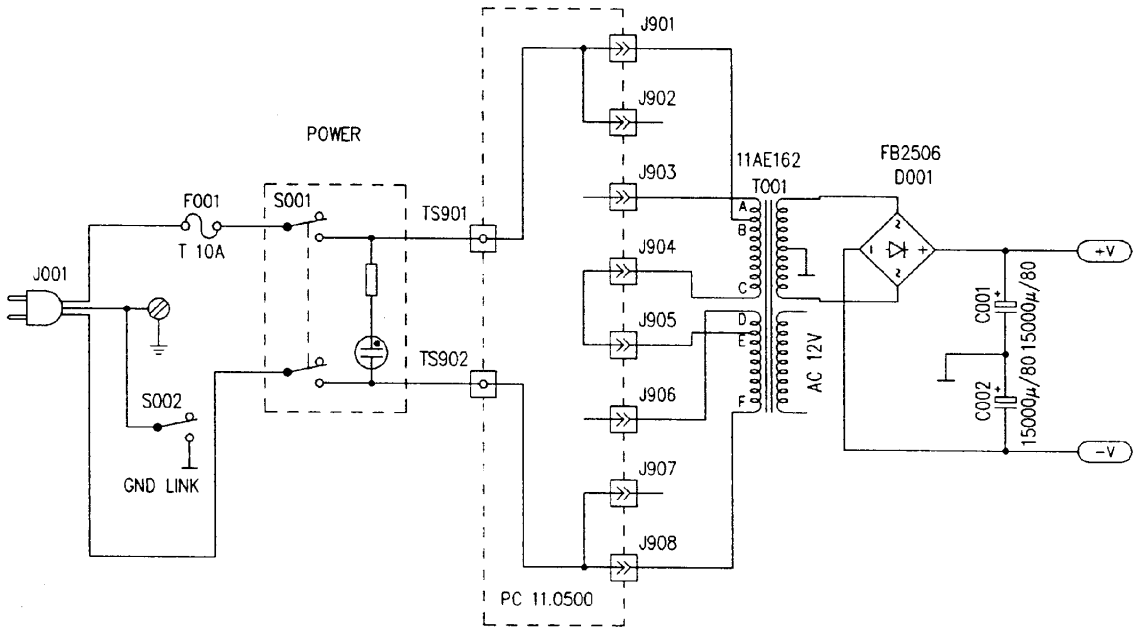

110V	120V	220V	230V	240V
1 – B	1 – A	1 – B	1 – A	1 – A
2 – E	2 – D	2 –	2 –	2 –
3 – A	3 – B	3 – A	3 – B	3 – B
4 –	4 –	4 – C	4 – C	4 – C
5 –	5 –	5 – E	5 – E	5 – D
6 – D	6 – E	6 – D	6 – D	6 – E
7 – C	7 – C	7 –	7 –	7 –
8 – F	8 – F	8 – F	8 – F	8 – F

TITLE: POWER SUPPLY		MODEL: PAM960	ECLEREE LABORATORIO DE ELECTRO-ACUSTICA BARCELONA ESPAÑA
		SHEET 7 OF 9	
DRAWN: J.QUERALT	DATE: 25.01.96	REPLACES:	DRW. NO. 10.0319 / REV.
CHECKED:	DATE:	REPLACED BY:	

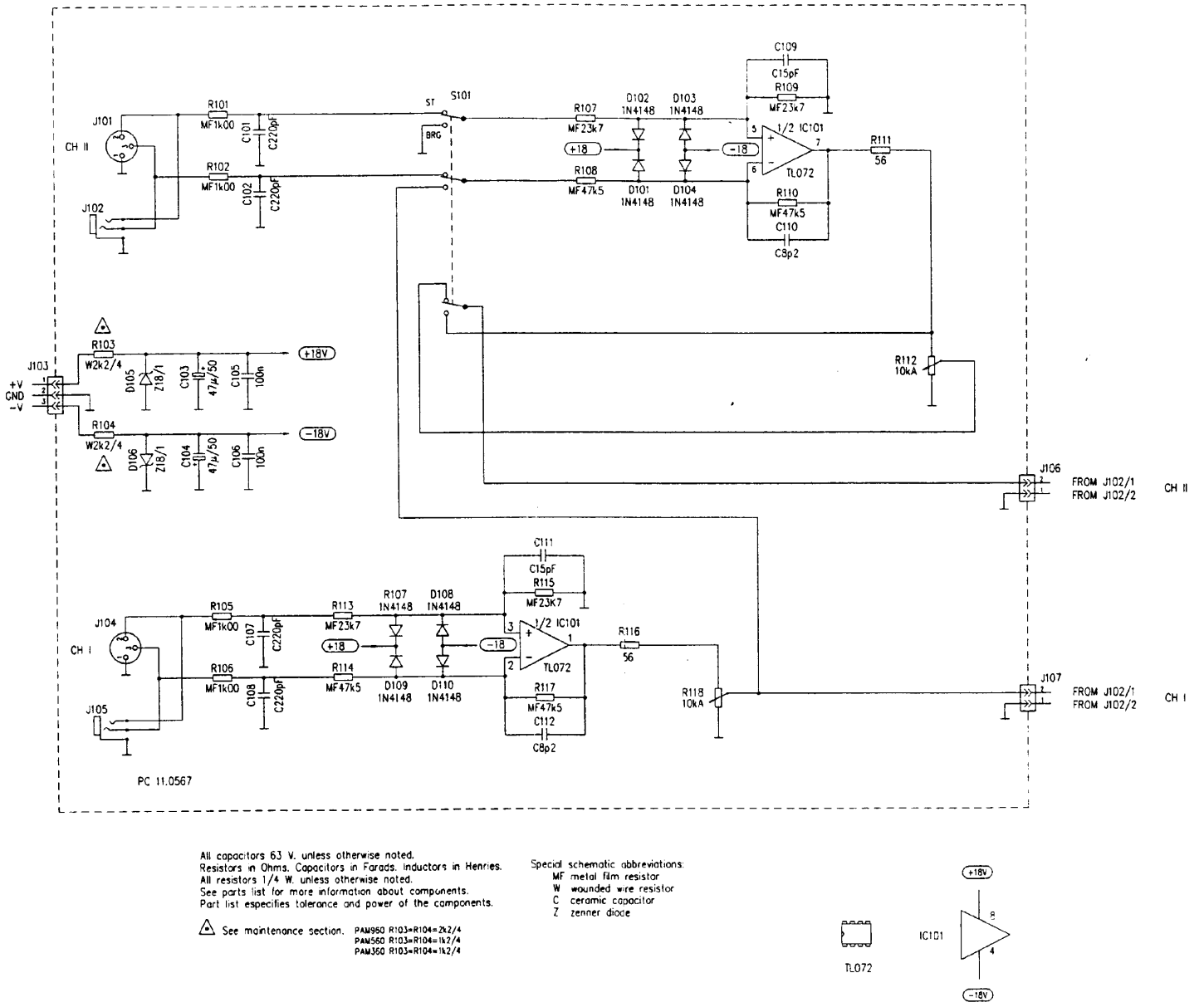

All capacitors 63 V. unless otherwise noted.
Resistors in Ohms. Capacitors in Farads. Inductors in Henries.
All resistors 1/4 W. unless otherwise noted.
See parts list for more information about components.
Part list especifies tolerance and power of the components.

⚠ See maintenance section. PAM960 R103=R104=2k2/4
PAM560 R103=R104=1k2/4
PAM360 R103=R104=1k2/4

Special schematic abbreviations:
MF metal film resistor
W wounded wire resistor
C ceramic capacitor
Z zenner diode

TITLE: INPUT CIRCUIT		MODEL: PAM960/560/360	ECLER LABORATORIO DE ELECTRO-ACUSTICA BARCELONA ESPAÑA
		SHEET 1 OF 9	
DRAWN: J.QUERALT	DATE: 24.01.96	REPLACES:	DRW. NO. 10.0317 / REV.
CHECKED:	DATE:	REPLACED BY:	

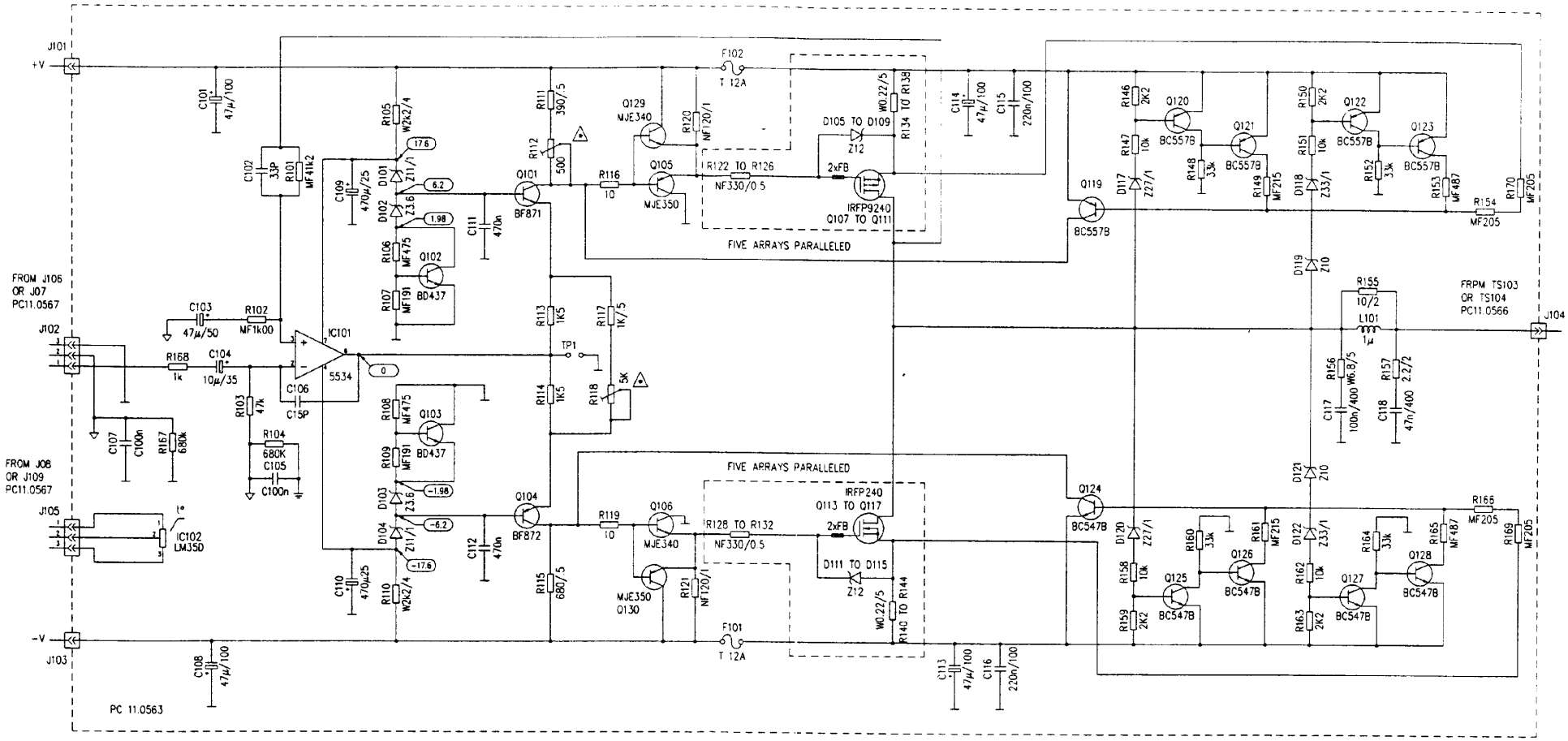

LM350 BC557B BC547B BD437 BF871 BF872 MJE340 MJE350 IRFP240 IRFP9240 NE5534

All capacitors 63 V unless otherwise noted.
Resistors in Ohms. Capacitors in Farads. Inductors in Henries.
All resistors 1/4 W unless otherwise noted.
See parts list for more information about components.

⚠ Factory adjusted.

Special schematic abbreviations:
MF metal film resistor
W wounded wire resistor
NF non inflammable resistor
C ceramic capacitor
Z zenner diode

TITLE: SWITCHING POWER MOSFET AMPLIFIER		MODEL: PAM960	ECLER LABORATORIO DE ELECTRO-ACUSTICA BARCELONA ESPAÑA
		SHEET 4 OF 9	
DRAWN: J.QUERALT	DATE: 22.01.96	REPLACES:	DRW NO 10.0315 / REV.
CHECKED:	DATE:	REPLACED BY:	

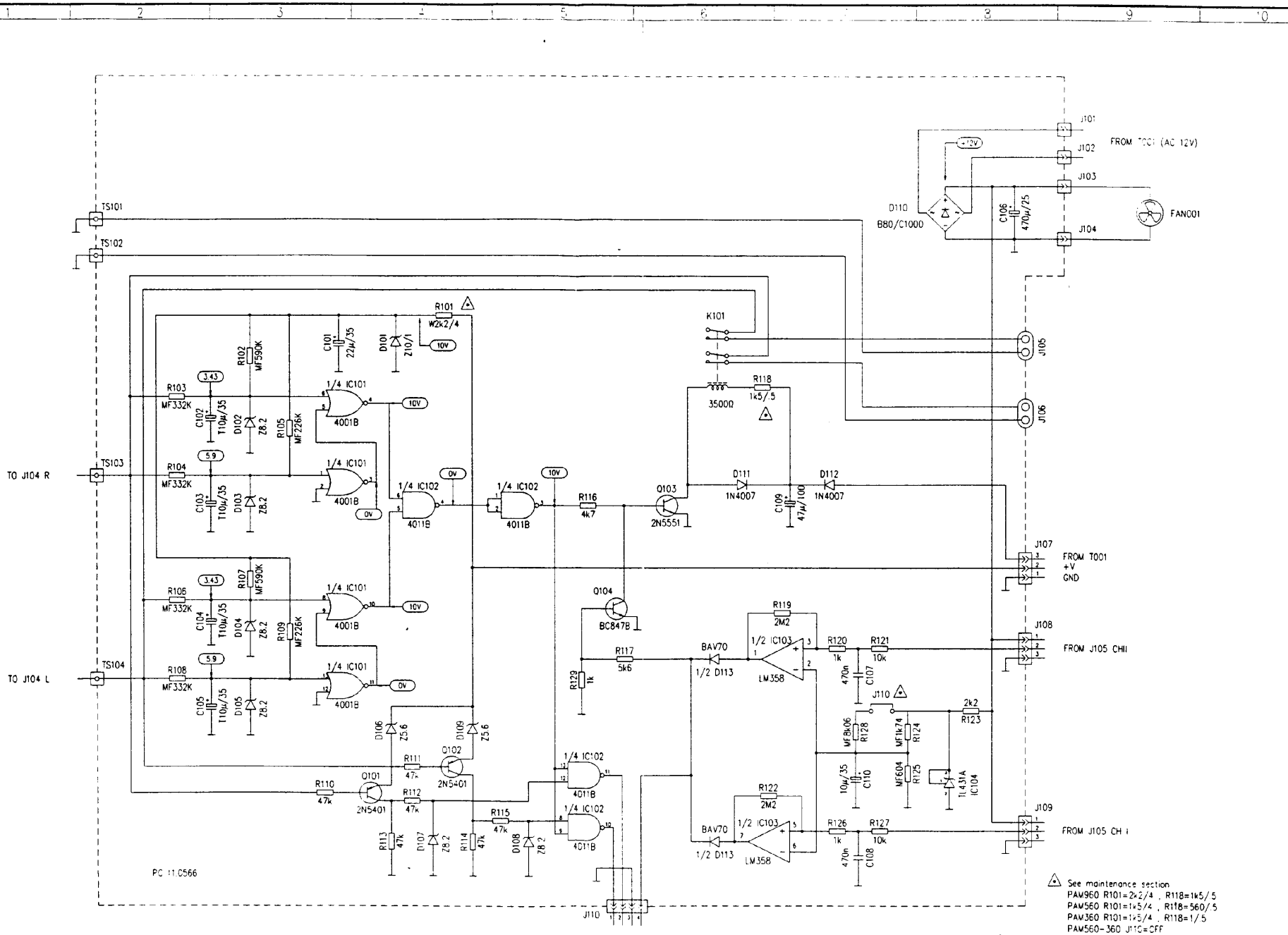

TITLE: DC OUT AND THERMAL PROTECTION CIRCUIT	MODEL: PAM960/560/360	ECLER LABORATORIO DE ELECTRO-ACUSTICA BARCELONA ESPAÑA	
	SHEET 5 OF 9		
DRAWN: J.QUERALT DATE: 23.01.96	REPLACES:	DRW. NO 10.0316	REV
CHECKED: DATE:	REPLACED BY:		