

WEB: www.yorkville.com

WORLD HEADQUARTERS

CANADA

Yorkville Sound Limited
550 Granite Court
Pickering, Ontario
L1W 3Y8 CANADA

Voice: 905-837-8481
Fax: 905-837-8746

U.S.A.

Yorkville Sound Inc.
4625 Witmer Industrial Estate
Niagara Falls, New York
14305, USA

Voice: 716-297-2920
Fax: 716-297-3689

Quality and Innovation Since 1963

Printed in Canada

SERVICE MANUAL

E10P

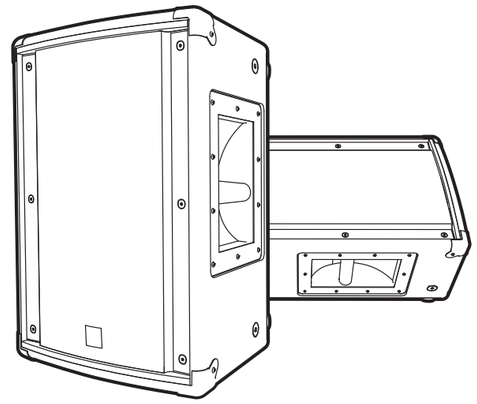

SMT Disclaimer

Due to the complex nature of the use of SMT installed components in Yorkville equipment, we highly caution all service technicians in attempting to repair or replace SMT factory installed components.

Many of these components may be glued prior to initial soldering.

Replacing SMT components requires expensive specialized de-soldering equipment and training.

Yorkville Sound will repair and replace defective SMT components to ensure proper quality assurance and installation is maintained.

Manual-Service-e10p-00-1v7 • Sept. 6, 2018•

IMPORTANT SAFETY INSTRUCTIONS

This lightning flash with arrowhead symbol, within an equilateral triangle, is intended to alert the user to the presence of uninsulated "dangerous voltage" within the product's enclosure that may be of sufficient magnitude to constitute a risk of electric shock to persons.

Ce symbole d'éclair avec tête de flèche dans un triangle équilatéral est prévu pour alerter l'utilisateur de la présence d'un «voltage dangereux» non-isolé à proximité de l'enceinte du produit qui pourrait être d'ampleur suffisante pour présenter un risque de choque électrique.

IEC 60417-5041

CAUTION • AVIS

RISK OF ELECTRIC SHOCK DO NOT OPEN
RISQUE DE CHOC ELECTRIQUE NE PAS OUVRIR

CAUTION: HOT SURFACE
ATTENTION: SURFACE CHAUDE

S2125A

The exclamation point within an equilateral triangle is intended to alert the user to the presence of important operating and maintenance (servicing) instructions in the literature accompanying the appliance.

Le point d'exclamation à l'intérieur d'un triangle équilatéral est prévu pour alerter l'utilisateur de la présence d'instructions importantes dans la littérature accompagnant l'appareil en ce qui concerne l'opération et la maintenance de cet appareil.

FOLLOW ALL INSTRUCTIONS

Instructions pertaining to a risk of fire, electric shock, or injury to a person

CAUTION: TO REDUCE THE RISK OF ELECTRIC SHOCK, DO NOT REMOVE COVER (OR BACK). NO USER SERVICEABLE PARTS INSIDE. REFER SERVICING TO QUALIFIED SERVICE PERSONNEL. THIS DEVICE IS FOR INDOOR USE ONLY!

Read Instructions: The Owner's Manual should be read and understood before operation of your unit. Please, save these instructions for future reference and heed all warnings.

Clean only with dry cloth.

Packaging: Keep the box and packaging materials, in case the unit needs to be returned for service.

Warning: To reduce the risk or fire or electric shock, do not expose this apparatus to rain or moisture. *Do not use this apparatus near water!*

Warning: When using electric products, basic precautions should always be followed, including the following:

Power Sources

Your unit should be connected to a power source only of the voltage specified in the owners manual or as marked on the unit. This unit has a polarized plug. Do not use with an extension cord or receptacle unless the plug can be fully inserted. Precautions should be taken so that the grounding scheme on the unit is not defeated. An apparatus with CLASS I construction shall be connected to a Mains socket outlet with a protective earthing ground. Where the MAINS plug or an appliance coupler is used as the disconnect device, the disconnect device shall remain readily operable.

Hazards

Do not place this product on an unstable cart, stand, tripod, bracket or table. The product may fall, causing serious personal injury and serious damage to the product. Use only with cart, stand, tripod, bracket, or table recommended by the manufacturer or sold with the product. Follow the manufacturer's instructions when installing the product and use mounting accessories recommended by the manufacturer. Only use attachments/accessories specified by the manufacturer
Note: Prolonged use of headphones at a high volume may cause health damage on your ears.

The apparatus should not be exposed to dripping or splashing water; no objects filled with liquids should be placed on the apparatus.

Terminals marked with the "lightning bolt" are hazardous live; the external wiring connected to these terminals require installation by an instructed person or the use of ready made leads or cords.

Ensure that proper ventilation is provided around the appliance. Do not install near any heat sources such as radiators, heat registers, stoves, or other apparatus (including amplifiers) that produce heat.

No naked flame sources, such as lighted candles, should be placed on the apparatus.

Power Cord

Do not defeat the safety purpose of the polarized or grounding-type plug. A polarized plug has two blades with one wider than the other. A grounding type plug has two blades and a third grounding prong. The wide blade or the third prong are provided for your safety. If the provided plug does not fit into your outlet, consult an electrician for replacement of the obsolete outlet. The AC supply cord should be routed so that it is unlikely that it will be damaged. Protect the power cord from being walked on or pinched particularly at plugs. If the AC supply cord is damaged DO NOT OPERATE THE UNIT. To completely disconnect this apparatus from the AC Mains, disconnect the power supply cord plug from the AC receptacle. The mains plug of the power supply cord shall remain readily operable.

Unplug this apparatus during lightning storms or when unused for long periods of time.

Service

The unit should be serviced only by qualified service personnel. Servicing is required when the apparatus has been damaged in any way, such as power-supply cord or plug is damaged, liquid has been spilled or objects have fallen into the apparatus, the apparatus has been exposed to rain or moisture, does not operate normally, or has been dropped.

SUIVEZ TOUTES LES INSTRUCTIONS

Instructions relatives au risque de feu, choc électrique, ou blessures aux personnes

AVIS: AFIN DE REDUIRE LES RISQUE DE CHOC ELECTRIQUE, N'ENLEVEZ PAS LE COUVERT (OU LE PANNEAU ARRIERE) NE CONTIENT AUCUNE PIECE REPARABLE PAR L'UTILISATEUR. CONSULTEZ UN TECHNICIEN QUALIFIE POUR L'ENTRETIENT CE PRODUIT EST POUR L'USAGE À L'INTÉREUR SEULEMENT

Veuillez Lire le Manuel: Il contient des informations qui devraient êtres comprises avant l'opération de votre appareil. Conservez. Gardez S.V.P. ces instructions pour consultations ultérieures et observez tous les avertissements.

Nettoyez seulement avec le tissu sec.

Emballage: Conservez la boite au cas ou l'appareil devait être retourner pour réparation.

Avertissement: Pour réduire le risque de feu ou la décharge électrique, n'exposez pas cet appareil à la pluie ou à l'humidité. *N'utilisez pas cet appareil près de l'eau!*

Attention: Lors de l'utilisation de produits électrique, assurez-vous d'adhérer à des précautions de bases incluant celle qui suivent:

Alimentation

L'appareil ne doit être branché qu'à une source d'alimentation correspondant au voltage spécifié dans le manuel ou tel qu'indiqué sur l'appareil. Cet appareil est équipé d'une prise d'alimentation polarisée. Ne pas utiliser cet appareil avec un cordon de raccordement à moins qu'il soit possible d'insérer complètement les trois lames. Des précautions doivent êtres prises afin d'eviter que le système de mise à la terre de l'appareil ne soit désengagé. Un appareil construit selon les normes de CLASS I devrait être raccordé à une prise murale d'alimentation avec connexion intacte de mise à la masse. Lorsqu'une prise de branchement ou un coupleur d'appareils est utilisée comme dispositif de débranchement, ce dispositif de débranchement devra demeurer pleinement fonctionnel avec raccordement à la masse.

Risque

Ne pas placer cet appareil sur un chariot, un support, un trépied ou une table instables. L'appareil pourrait tomber et blesser quelqu'un ou subir des dommages importants. Utiliser seulement un chariot, un support, un trépied ou une table recommandés par le fabricant ou vendus avec le produit. Suivre les instructions du fabricant pour installer l'appareil et utiliser les accessoires recommandés par le fabricant. Utilisez seulement les attachements/accessoires indiqués par le fabricant
Note: L'utilisation prolongée des écouteurs à un volume élevé peut avoir des conséquences néfastes sur la santé sur vos oreilles. .

Il convient de ne pas placer sur l'appareil de sources de flammes nues, telles que des bougies allumées.

L'appeil ne doit pas être exposé à des égouttements d'eau ou des éclaboussures et qu'aucun objet rempli de liquide tel que des vases ne doit être placé sur l'appareil.

Assurez que lappareil est fourni de la propre ventilation. Ne procédez pas à l'installation près de source de chaleur tels que radiateurs, registre de chaleur, fours ou autres appareils (incluant les amplificateurs) qui produisent de la chaleur.

Les dispositifs marqués d'une symbole "d'éclair" sont des parties dangereuses au toucher et que les câblages extérieurs connectés à ces dispositifs de connection extérieure doivent être effectivés par un opérateur formé ou en utilisant des cordons déjà préparés.

Cordon d'Alimentation

Ne pas enlever le dispositif de sécurité sur la prise polarisée ou la prise avec tige de mise à la masse du cordon d'alimentation. Une prise polarisée dispose de deux lames dont une plus large que l'autre. Une prise avec tige de mise à la masse dispose de deux lames en plus d'une troisième tige qui connecte à la masse. La lame plus large ou la tige de mise à la masse est prévu pour votre sécurité. La prise murale est désuète si elle n'est pas conçue pour accepter ce type de prise avec dispositif de sécurité. Dans ce cas, contactez un électricien pour faire remplacer la prise murale. Évitez d'endommager le cordon d'alimentation. Protégez le cordon d'alimentation. Assurez-vous qu'on ne marche pas dessus et qu'on ne le pince pas en particulier aux prises. N'UTILISEZ PAS L'APPAREIL si le cordon d'alimentation est endommagé. Pour débrancher complètement cet appareil de l'alimentation CA principale, déconnectez le cordon d'alimentation de la prise d'alimentation murale. Le cordon d'alimentation du bloc d'alimentation de l'appareil doit demeurer pleinement fonctionnel.

Débranchez cet appareil durant les orages ou si inutilisé pendant de longues périodes.

Service

Consultez un technicien qualifié pour l'entretien de votre appareil. L'entretien est nécessaire quand l'appareil a été endommagé de quelque façon que se soit. Par exemple si le cordon d'alimentation ou la prise du cordon sont endommagés, si il y a eu du liquide qui a été renversé à l'intérieur ou des objets sont tombés dans l'appareil, si l'appareil a été exposé à la pluie ou à l'humidité, si il ne fonctionne pas normalement, ou a été échappé.

IMPORTANT SAFETY INSTRUCTIONS (UL60065)

The Lightning Flash with arrowhead symbol within an equilateral triangle, is intended to alert the user to the presence of uninsulated "dangerous voltage" within the product enclosure that may be of sufficient magnitude to constitute a risk of shock to persons

The exclamation point within an equilateral triangle is intended to alert the user to the presence of important operating and maintenance (servicing) instructions in the literature accompanying the product

1. Read these instructions.
2. Keep these instructions.
3. Heed all warnings.
4. Follow all instructions.
5. Do not use this apparatus near water.
6. Clean only with dry cloth.
7. Do not block any ventilation openings. Install in accordance with the manufacturer's instructions.
8. Do not install near any heat sources such as radiators, heat registers, stoves, or other apparatus (including amplifiers) that produce heat.
9. Do not defeat the safety purpose of the polarized or grounding-type plug. A polarized plug has two blades with one wider than the other. A grounding type plug has two blades and a third grounding prong. The wide blade or the third prongs are provided for your safety. If the provided plug does not fit into your outlet, consult an electrician for replacement of the obsolete outlet.
10. Protect the power cord from being walked on or pinched particularly at plugs, convenience receptacles, and the point where they exit from the apparatus.
11. Only use attachments/accessories specified by the manufacturer.
12. Use only with the cart, stand, tripod, bracket, or table specified by the manufacturer, or sold with the apparatus. When a cart is used, use caution when moving the cart/apparatus combination to avoid injury from tip-over.
13. Unplug this apparatus during lightning storms or when unused for long periods of time.
14. Refer all servicing to qualified service personnel. Servicing is required when the apparatus has been damaged in any way, such as power-supply cord or plug is damaged, liquid has been spilled or objects have fallen into the apparatus, the apparatus has been exposed to rain or moisture, does not operate normally, or has been dropped.

WARNING:

- To reduce the risk of fire or electric shock, do not expose this apparatus to rain or moisture and objects filled with liquids, such as vases, should not be placed on this apparatus.
- To completely disconnect this apparatus from the ac mains, disconnect the power supply cord plug from the ac receptacle.
- The mains plug of the power supply cord or appliance coupler shall remain readily accessible.

Le symbole représentant un éclair avec une flèche à l'intérieur d'un triangle équilatéral est utilisé pour prévenir l'utilisateur de la présence d'une tension électrique dangereuse non isolée à l'intérieur de l'appareil. Cette tension est d'un niveau suffisamment élevé pour représenter un risque d'électrocution

Le symbole représentant un point d'exclamation à l'intérieur d'un triangle équilatéral, signale à l'utilisateur la présence d'instructions importantes relatives au fonctionnement et à l'entretien de l'appareil dans cette notice d'installation

1. Lisez ces instructions.
2. Conservez ces instructions.
3. Respecter tous les avertissements.
4. Suivez toutes les instructions.
5. N'utilisez pas l'appareil près de l'eau.
6. Nettoyer uniquement avec chiffon sec.
7. Ne bloquez pas les ouvertures de ventilation. Installer en suivant les instructions du fabricant.
8. Ne pas installer près des sources de chaleur telles que radiateurs, bouches de chaleur, four ou autres appareils (y compris les amplificateurs) produisant de la chaleur.
9. N'annulez pas l'objectif sécuritaire de la fiche polarisée ou de la tige de mise à la terre. Une fiche polarisée possède deux lames avec une plus large que l'autre. Une prise avec mise à la terre possède deux lames et une troisième tige. La lame large ou la troisième tige sont fournis pour votre sécurité. Si la fiche n'entre pas dans votre prise, consultez un électricien pour remplacer la prise obsolète.
10. Protéger le cordon d'alimentation des piétinements ou pincements en particulier près des fiches, des prises de courant et au point de sortie de l'appareil.
11. Utilisez uniquement les accessoires spécifiés par le fabricant.
12. Utiliser uniquement avec un charriot, stand, trépied ou une table spécifiée par le fabricant, ou vendus avec l'appareil.
13. Débranchez l'appareil durant un orage ou lorsqu'il reste inutilisé pendant de longues périodes de temps.
14. Confiez toute réparation à un technicien qualifié. Une réparation est nécessaire lorsque l'appareil a été endommagé de quelque façon que ce soit; comme lorsque le cordon d'alimentation ou la fiche est endommagé, lorsque du liquide a été renversé ou des objets sont tombés à l'intérieur, lorsque l'appareil a été exposé à la pluie ou l'humidité, ne fonctionne pas normalement, ou est tombé.

AVERTISSEMENT:

- Pour réduire les risques d'incendie ou de choc électrique, ne pas exposer cet appareil à la pluie ou à l'humidité et ne placez pas d'objets contenant des liquides, tels que des vases, sur l'appareil.
- Pour isoler totalement cet appareil de l'alimentation secteur, débranchez totalement son cordon d'alimentation du réceptacle CA.
- La prise du cordon d'alimentation ou du prolongateur, si vous en utilisez un comme dispositif de débranchement, doit rester facilement accessible

CAUTION
TO PREVENT ELECTRIC SHOCK HAZARD,
DO NOT CONNECT TO MAINS POWER SUPPLY
WHILE GRILLE IS REMOVED.

AVIS
POUR PRÉVENIR LES RISQUES D'ÉLECTROCUTION,
NE PAS RACCORDER A L'ALIMENTATION ÉLECTRIQUE ALORS
QUE LA GRILLE EST RETIRÉE.

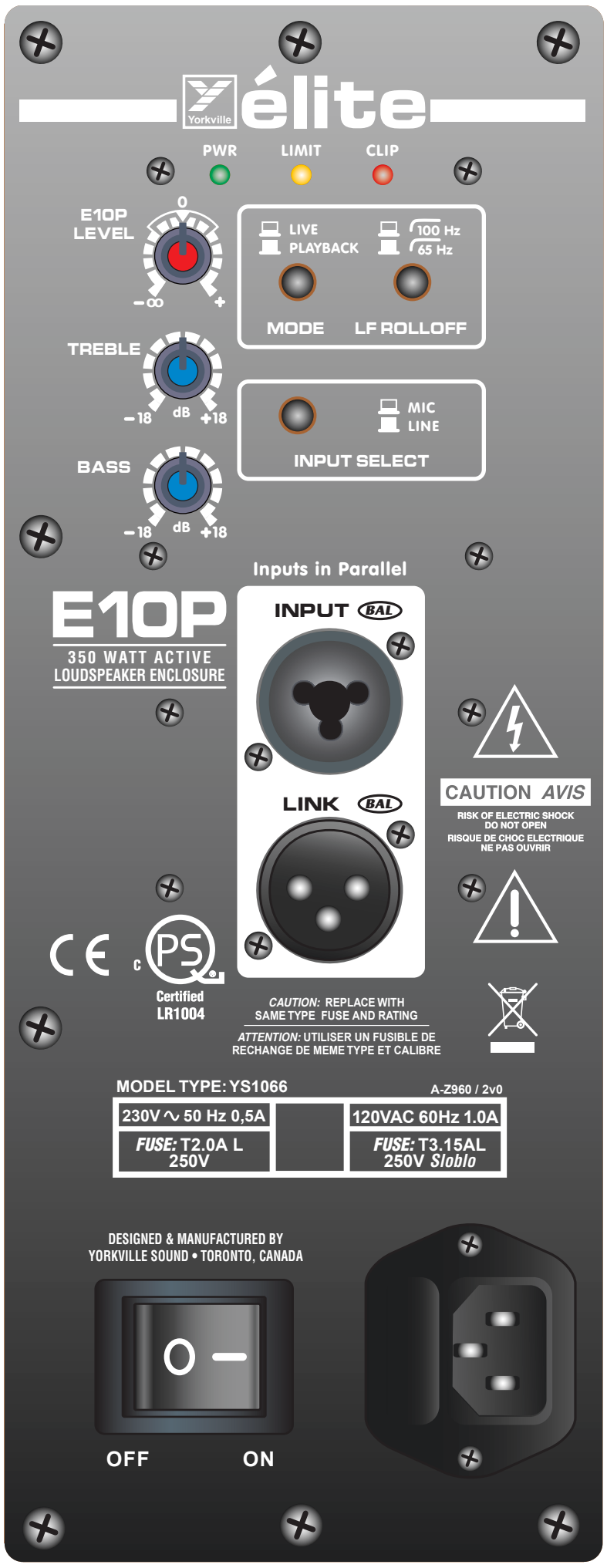
Yorkville
élite
PWR
LIMIT
CLIP
E10P
LEVEL
0
−∞
+
LIVE
PLAYBACK
100 Hz
65 Hz
MODE
LF ROLLOFF
TREBLE
−18
dB
+18
MIC
LINE
INPUT SELECT
BASS
−18
dB
+18
Inputs in Parallel
E10P
350 WATT ACTIVE
LOUDSPEAKER ENCLOSURE
INPUT BAL
LINK BAL
CAUTION AVIS
RISK OF ELECTRIC SHOCK
DO NOT OPEN
RISQUE DE CHOC ELECTRIQUE
NE PAS OUVRIR
CE
c PS
Certified
LR1004
CAUTION: REPLACE WITH
SAME TYPE FUSE AND RATING
ATTENTION: UTILISER UN FUSIBLE DE
RECHANGE DE MEME TYPE ET CALIBRE
MODEL TYPE: YS1066
A-Z960 / 2v0
230V ∿ 50 Hz 0,5A
FUSE: T2.0A L
250V
120VAC 60Hz 1.0A
FUSE: T3.15AL
250V Sloblo
DESIGNED & MANUFACTURED BY
YORKVILLE SOUND • TORONTO, CANADA
O −
OFF
ON

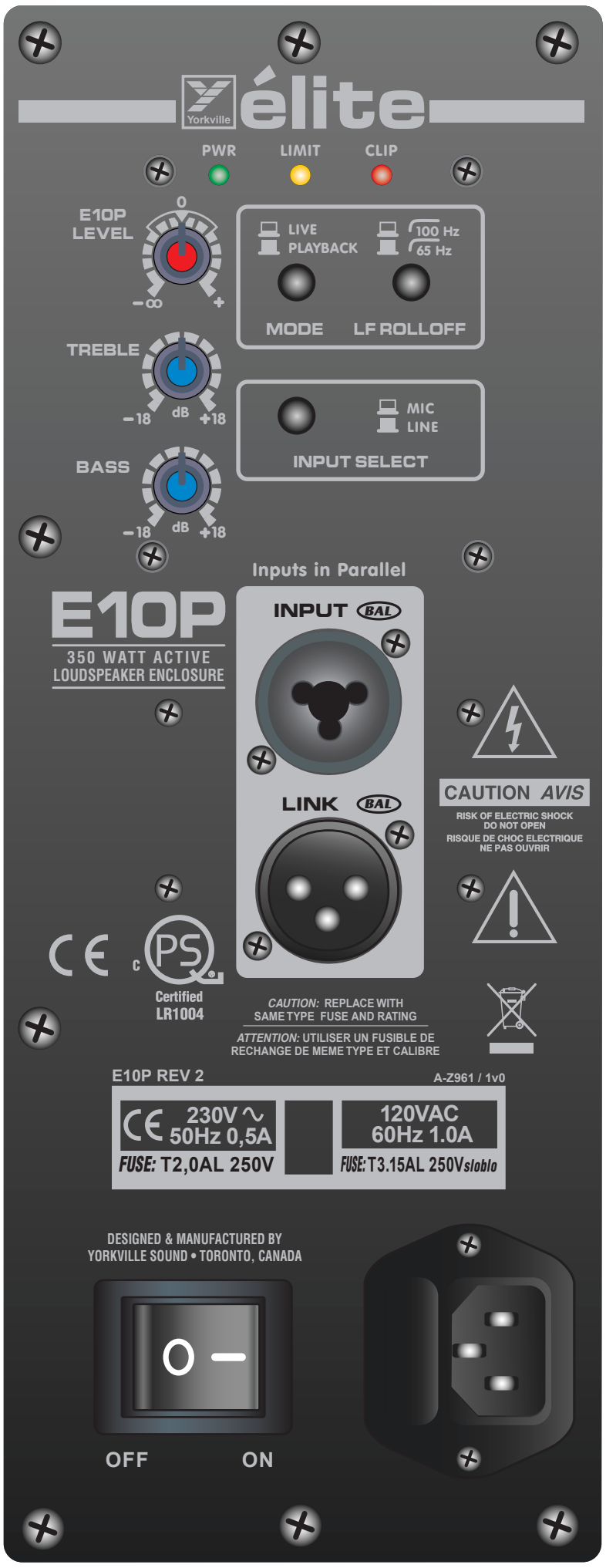
élite
Yorkville
PWR
LIMIT
CLIP
E10P LEVEL
0
−∞
+
LIVE
PLAYBACK
100 Hz
65 Hz
MODE
LF ROLLOFF
TREBLE
−18
dB
+18
MIC
LINE
INPUT SELECT
BASS
−18
dB
+18
Inputs in Parallel
E10P
350 WATT ACTIVE
LOUDSPEAKER ENCLOSURE
INPUT BAL
LINK BAL
CAUTION AVIS
RISK OF ELECTRIC SHOCK
DO NOT OPEN
RISQUE DE CHOC ELECTRIQUE
NE PAS OUVRIR
Certified
LR1004
CAUTION: REPLACE WITH
SAME TYPE FUSE AND RATING
ATTENTION: UTILISER UN FUSIBLE DE
RECHANGE DE MEME TYPE ET CALIBRE
E10P REV 2
A-Z961 / 1v0
230V ~
50Hz 0,5A
FUSE: T2,0AL 250V
120VAC
60Hz 1.0A
FUSE: T3.15AL 250V slablo
DESIGNED & MANUFACTURED BY
YORKVILLE SOUND • TORONTO, CANADA
OFF
ON

Specifications

Model:	E10p
System Type:	powered loudspeaker
Active or Passive:	Active
Program Power (Watts):	350
Biamp Operation Only:	Internally biamped
Frequency Response (Hz +/- 3db):	65 to 20k
Crossover Frequency (Hz):	1500
Driver Configuration:	2 way
HF Driver(s):	1 inch
HF Program Power (Watts):	50
HF Impedance (ohms):	8
HF Dispersion (°H x °V):	100 x 25
LF Driver(s):	10 inch
LF Program Power(Watts):	300
LF Impedance(ohms):	4-ohms
LF Protection:	excursion and RMS
Total Power (Watts):	350
HF Power Amplifier (Watts):	50
HF Processing:	peak and average limiting
LF Power Amplifier (Watts):	300
LF Processing:	peak and average limited, boost limited with multi slope curve
Cooling Scheme:	convection
Power Cable:	removable IEC
Power Switch:	yes
Power Consumption (typ/max):	120 va/200va
Inputs - 1/4-inch Jacks:	1 combi w xlr
Inputs - XLR:	1 combi w 1/4 inch
Input Impedance (Bal/UnBal):	4k ohms / 2k ohms
Input Sensitivity (Vrms Sine):	Line in 1.4 w control at center 0.35 at max Mic in -50 dBv @ max
Level Controls:	1, curve changes in mic or line mode
EQ Controls:	Bass and Treble
Limiter:	peak and average on horn and woofer, boost limited with multi slope curve
LED Indicators:	power, clip, limit
Other Controls / Features:	Dynamic 75 Hz boost, tone control frequencies and slopes differ in live/rec mode, sub/no sub switch, live recorded eq mode switch
Corners:	8
Feet:	4
Flying Hardware:	4 Flypoints - 2 Top + 2 Bottom + Pull back
Included Hardware:	1/4-20
Bar Handles:	1
Pole Mount Adapter (1 3/8-inch/3.5cm):	yes
Enclosure Materials:	15mm (5/8inch) 11-ply Russian Birch
Port(s):	1, located on rear
Grille:	Perforated Metal
Covering / Finish:	Black Ozite (Carpet)
Optional Covering / Finishes:	Black Ultrathane Paint (E10PB)
Processor (optional):	Internally biamped
Dimensions (DWH xbackW, inches):	12 x 13 x 18.5 x 5.5
Dimensions (DWH xbackW, cm):	30 x 33 x 45 x 14
Weight (lbs/kg):	34/15.5

Spécifications

Modèle:	E10p
Type de Système:	Enceinte amplifiée à haut-parleur
Actif ou Passif:	Actif
Puissance nominale (Watts):	350
Opération en mode de Biamplification Seulement:	Biamplification interne
Réponse en Fréquence (Hz +/- 3db):	65 to 20k
Fréquence de coupure(Hz):	1500
Configuration de Drivers:	2 voix
Driver(s) Hautes Fréquences:	1 pouce
Puissance Nominale pour les HF (Watts):	50
Impédance HF (ohms):	8
Dispersion HF (°H x °V):	100 x 25
Driver(s) Basses Fréquences :	10 pouces
Puissance Nominale BF (Watts):	300
Impédance BF (ohms):	4 ohms
Protection BF :	excursion et RMS
Puissance Totale (Watts):	350
Amplificateur De Puissance HF (Watts):	50
Processing HF :	Limitation de Pointe et de moyenne
Amplificateur de Puissance BF (Watts):	300
Processing LF :	Limitation de Pointe et de moyenne, Limiteur boost avec multiple pente d'atténuation
Système de refroidissement:	Convection
Cordon d'Alimentation:	IEC amovible
Commutateur de mise en marche:	Oui
Consommation de Puissance (typ/max):	120 va/200va
Entrées – Prises 1/4-pouce :	1 combi avec xlr
Entrées - XLR:	1 combi avec 1/4 pouce
Impédance d'Entrée (Sym/Asym):	4k ohms / 2k ohms
Sensibilité d'entrée (Vrms Sine):	Entrée ligne 1.4 avec contrôle au centre 0.35 au max Entrée Mic -50 dBv @ max
Contrôles de Niveau:	1, courbe change selon le mode utilisé (mic ou line)
Contrôles d'Égalisation:	Graves et Aiguës
Limiteur:	Pointe et moyenne sur le pavillon et le woofer, Limiteur boost avec multiple pente d'atténuation
DEL Indicatrices:	Alimentation, clip, limit
Autres Contrôles / Caractéristiques:	Dynamique boost 75 Hz, fréquence des contrôles de tonalité et courbe de réponse Diffèrent en mode live/rec, sélecteur sub/sans sub, Sélecteur d'égalisation pour modes Live/préenregistré
Coins:	8
Pieds:	4
Quincaillerie de suspension:	4 point de suspension - 2 dessus + 2 dessous + tire
Quincaillerie incluse:	1/4/2020
Poignés:	1
Adaptateur pour montage sur pôle (1 3/8-	Oui
Matériau de construction:	Contreplaqué de bouleau Russe 15 mm (5/8 pouce) 11-plie
Évent(s):	1, situé à l'arrière
Grille:	Métal Perforé
Recouvrement / Finition:	Ozite Noire (tapis)
Recouvrement optionnel / Finitions:	Peinture Ultra thane Noire (E10PB)
Processeur (optionnel):	Bi amplifié (interne)
Dimensions (PLH x arrière L, pouces):	12 x 13 x 18.5 x 5.5
Dimensions (PLH x arrière L, cm):	30 x 33 x 45 x 14
Poids (livres/kg):	34/15.5

E10P Block Diagram

DESIGNED & MANUFACTURED BY YORKVILLE SOUND

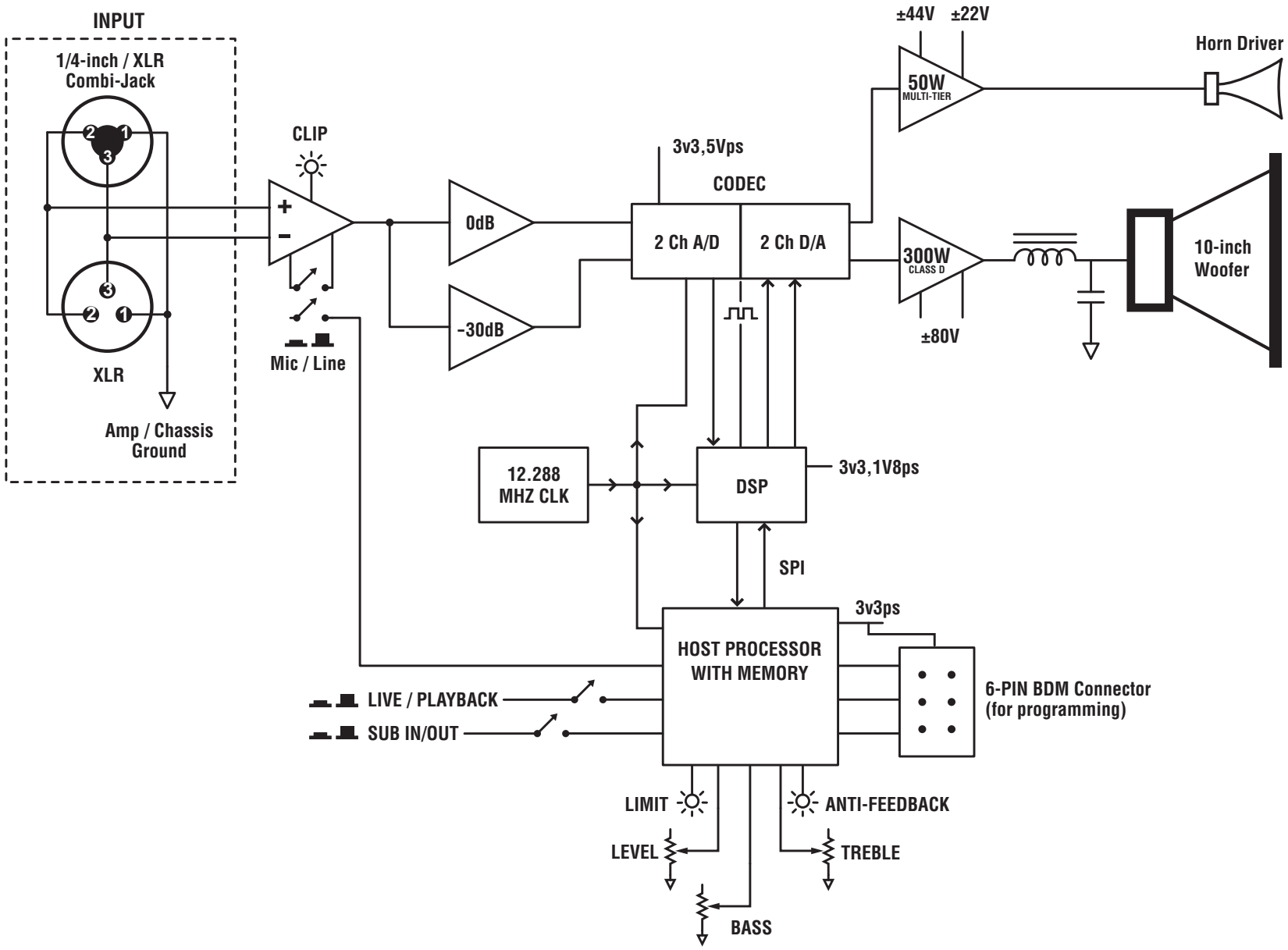

BLOCK-DIAG-e10p-00-2v0.ai

E10P Parts List 9/21/2015

YS #	Description	Qty.	YS #	Description	Qty.	YS #	Description	Qty.
6451	__4N7 250V 20%CAP BLK 'Y' 10MM AC	1						
5242	100N 250V 20%CAP BLK 'X2' 15MM AC	1						
5266	680N 250V 20%CAP BLK 'X2' 27MM AC	1						
5912	2200U 63V 20%CAP RADIAL ELECT BULK	4						
5910	4700U 100V 10%CAP BLK 35X40MM 4PS	2						
4388	100K B LIN 9MM DETENT KNURL P30	3						
5906	RED 3MM LED 1V9 20MA.4SPCER T&R	1						
5907	YEL 3MM LED 1V9 20MA.4SPCER T&R	1						
5908	GRN 3MM LED 1V9 20MA.4SPCER T&R	1						
6438	1N4007 1000V 1A0 DIODE T&R	2						
5190	MBS4992 TO92 8V5 DIAC T&R	1						
3759	___4UH COIL 14AWG ZOBEL VERTICAL	1						
6562	_192UH CHOKE 74T20AWG/77256MAGNTKS	1						
6492	1300UH COIL COMMON MODE 4AMP	1						
8476	2X2-IB-1/4" FLYING HARDWARE BRACKET	4						
8578	3 X 3 ROLLED EDGE TR-PP3R8X3	16						
3601	RING TERMINAL 16AWG WIRE & #8 SCREW	12						
6509	1/4"& XLR PCB MT VERT COMBO NEUTRIK	1						
4100	XLR MALE PCB MT VERT	1						
2337	4 CIR XH-HEADER 0.098IN	2						
2327	6 CIR XH-HEADER 0.098IN	2						
2329	12 CIR XH-HEADER 0.098IN	2						
3063	PATCH 04 22AWG 05.0 XH FLAT	1						
3045	PATCH 06 22AWG 10.0 XH FLAT	1						
3037	PATCH 12 22AWG 15.0 XH FLAT	1						
2899	EMI FERRITE SPLIT/SNAP-ON CORE	1						
2475	T3,15ALGDC BUSSMANN 5X20MM FUSE	1						
8565	BAR HANDLE ALL METAL RECTANGULAR	1						
7477	8R 60W 1" DRIVER 18 SOUNDND1030A	1						
3822	HEATSHRINK 1-1/4"ID BLACK	0.052						
3810	4" NYLON CABLE TIE	11						
9000	ADAPTOR FLANGE FOR HORN	1						
HRN0036	HORN LENS 230 X 36.5 X 80MM	1						
4148	06 CIR DUAL ROW HDR VT 0.1	1						
6535	26 SKT 25SQ 100 SIL BOT-ENTRY	1						
3558	TERM HOUSING 4 CIR .156/RAMP	1						
3538	24 PIN BREAKAWAY LOCK .156	0.167						
4147	6 PIN POWER PIN HEADER MALE POLZED	1						
4145	9PIN 3X3 POWER PIN HEADER	1						
3549	TRIFURCON TERM .156	4						
8632	KNOB ROUND PUSHBUTTON 1/4" GREY	3						
3426	8' 3/16 SJT AC LINE CORD REMOVB-CSA	1						
6562CORE	77256-A7 KOOL-MU TOROID CORE	1						
8701	4-40 KEPS NUT ZINC	1						
9985	4-40 NYLON INSERT LOK NUT	6						
8800	6-32 KEPS NUT ZINC	3						
8604	10-32 T NUT	4						
8602	1/4-20 T NUT	1						
8898	1/4-20 CAGE NUT	4						
9977	5/16-18 NYLON INSERT LOK NUT ZN CLR	1						
4055	SIL-PAD GASKET 5.825"X2.95"	1						
8877	4-40X1/4 FILLISTER PH MS ZN	1						
9001	4-40X5/16 PAN PH MS ZN C/W STAR	34						
8742	4-40X3/8 PAN PH TAPTITE JS500	8						
9975	#4X1/2 PAN PHIL TYPE A B.O.8	4						
8801	6-32X3/8 PAN PH TAPTITE JS500	6						
8811	#6X1X1/4 FLAT HD SQ SCKT WS ZN	6						
8785	#8X3/4 OVAL PH TYPE A BLACK	16						
8756	#10X3/4 PAN PH TYPE A BLACK O	38						
8781	#10X7/8 FLAT QUAD TYPE A JS50	8						
8783	10-32X1 PAN QUAD TT JS500 BLA	8						
8786	10-32X1X1/4 PAN QD MS JS500 BLAC	4						
8777	#14X1 FLAT PH TYPE A JS500	4						
8928	#14X1X1/4 ALLEN FLHD WOOD SCRW	6						
8847	1/4-20X1X1/4 FLAT PH MS JS500	13						
8794	5/16-18X3X1/2 GRD5 HEX BOLT JS50	1						
3859	#4X1/2 PLASTIC HEX SPACER	17						
7530	10" 4R 300WPGM SPEAKER CER SOUND 18	1						
8966	9/16" NEOPRENE E10P SPONGE GASKET	1						
8489	1/4-20 SPLIT WASHER BLACK OXIDE	2						
8961	#4X.062 13F SHOULDER WASHER NSW	5						
8818	3/4ODX3/8IDX.080 THICK WASHER	1						
3440	4PDT MINI VERT ALT SWITCH	1						
3522	DPDT MINI PC VERT SNP ALT	2						
3688	DPDT ROKR SW QUIK 250"AC/25A ON-OFF	1						
4076	WHITE VHB TAPE 1/8X1/2X108 FEET PSA	0.5						
CH1342U	XFMR:E10P	1						

M1310 Parts Reference List 8/29/2018

REF	YS #	Description	REF	YS #	Description	REF	YS #	Description
C1		_4N7 50V 5%CAP 1206 SMT NPO	D7		MMBZ5231B 5V1 0W35 5% SMT ZEN	R34		W125 33K 5% 0805 SMT RES
C2		100N 50V 5%CAP 0805 SMT X7R	D8		MM3Z18VT1G 18V0 0W2 5% SMT ZEN	R35		W125 1K02 0.1% 0805 SMT RES
C3		100N 50V 5%CAP 0805 SMT X7R	D9		ES1H 500V 1A0 D214 UPGT 8814	R36		W125 330R 0.5% 0805 SMT RES
C4		180P 50V 5%CAP 0805 SMT NPO	D10		ES1H 500V 1A0 D214 UPGT 8814	R37		W125 47R 5% 0805 SMT RES
C5		180P 50V 5%CAP 0805 SMT NPO	D11		MM3Z18VT1G 18V0 0W2 5% SMT ZEN	R38		W125 33K 5% 0805 SMT RES
C6		__4N7 50V 5%CAP 1206 SMT NPO	D48		ES3D 200V 3A0 D214 SMT SMC	R39		1W00 100K 5% 2512 SMT RES
C7		680P 50V 5%CAP 0805 SMT C0G	D49		CDSF4148 75V 0A15 1005 SMT	R40		W100 475R 1% 0805 SMT RES
C8		_10U 25V 20%CAP 5X5.4 SMT EL	D50		CDSF4148 75V 0A15 1005 SMT	R42		W100 100R 1% 0805 SMT RES
C9		680P 50V 5%CAP 0805 SMT C0G	D51		ES3D 200V 3A0 D214 SMT SMC	R43		W125 4K7 5% 0805 SMT RES
C10		_10U 25V 20%CAP 5X5.4 SMT EL	D52		ES3D 200V 3A0 D214 SMT SMC	R44		W125 4K7 5% 0805 SMT RES
C11		__1N 50V 5%CAP 0805 SMT NPO	D53		ES3D 200V 3A0 D214 SMT SMC	R45		W125 10K00 0.1% 0805 SMT RES
C12		__1N 50V 5%CAP 0805 SMT NPO	D54		ES3D 200V 3A0 D214 SMT SMC	R46		W125 330R 0.5% 0805 SMT RES
C13		270P 50V 5%CAP 0805 SMT NPO	D55		ES3D 200V 3A0 D214 SMT SMC	R47		W100 200R 1% 0805 SMT RES
C14		270P 50V 5%CAP 0805 SMT NPO	D56		ES3D 200V 3A0 D214 SMT SMC	R48		W250 10R 5% 1206 SMT RES
C15		_33U 25V 20%CAP 6.3X5.5 SMT EL	D57		ES3D 200V 3A0 D214 SMT SMC	R49		W250 10R 5% 1206 SMT RES
C16		__1U 50V 20%CAP 4.3X3.9 SMT ELC	D58		ES3D 200V 3A0 D214 SMT SMC	R50		W250 10R 5% 1206 SMT RES
C17		_33U 25V 20%CAP 6.3X5.5 SMT EL	D59		ES3D 200V 3A0 D214 SMT SMC	R51		W250 10R 5% 1206 SMT RES
C18		__4U7 25V 20%CAP 4X5.5 SMT ELC	D60		ES3D 200V 3A0 D214 SMT SMC	R52		W100 475K 1% 0805 SMT RES
C20		_47P 50V 5%CAP 0805 SMT NPO	D61		ES3D 200V 3A0 D214 SMT SMC	R53		W100 475K 1% 0805 SMT RES
C21		100N 50V 5%CAP 0805 SMT X7R	D62		ES3D 200V 3A0 D214 SMT SMC	R54		W125 4K7 5% 0805 SMT RES
C22		_10N 50V 5%CAP 1206 SMT NPO	D63		ES3D 200V 3A0 D214 SMT SMC	R55		W125 1K800 0.1% 0805 SMT RES
C23		100U 25V 20%CAP 8X5.4 SMT ELE	HW1	M1607BLANK	FR4 ONLY 217.23SQIN 168PER YS#4100	R57		W250 22R 5% 1206 SMT RES
C24		680U 6V3 20%CAP 8X10 SMT ELE	HW2	3822	HEATSHRINK 1-1/4"ID BLACK	R58		W125 1K800 0.1% 0805 SMT RES
C26		100N 50V 5%CAP 0805 SMT X7R	HW3	3841	5.5" NYLON CABLE TIE	R59		W125 1M 5% 0805 SMT RES
C27		100N 50V 5%CAP 0805 SMT X7R	HW4	3841	5.5" NYLON CABLE TIE	R60		W100 274K 1% 0805 SMT RES
C28		_10U 25V 20%CAP 5X5.4 SMT EL	J1	4100	XLR MALE PCB MT VERT	R62		W250 10R 5% 1206 SMT RES
C30		100N 50V 5%CAP 0805 SMT X7R	J3	6509	1/4"& XLR PCB MT VERT COMBO NEUTRIK	R63		W125 1K800 0.1% 0805 SMT RES
C31		100N 50V 5%CAP 0805 SMT X7R	L1		_4.7UH 20% COIL 12MM SMT	R64		W125 1K02 0.1% 0805 SMT RES
C40		100N 100V 10%CAP 1206 SMT X7R	L2	6562	_192UH CHOKE 74T20AWG/77256MAGNTKS	R65		W100 18K2 1% 0805 SMT RES
C45		100N 50V 5%CAP 0805 SMT X7R	L3		8.2UH COIL 1210 SMT	R66		W100 475R 1% 0805 SMT RES
C48		100N 50V 5%CAP 0805 SMT X7R	L5	6492	1300UH COIL COMMON MODE 4AMP	R67		W125 1M 5% 0805 SMT RES
C49		__2U2 100V 20%CAP 1812 SMT X7R	L56		120UH COIL 0R4 10MMSQ SMT	R68		W250 10R 5% 1206 SMT RES
C50		__2U2 100V 20%CAP 1812 SMT X7R	LD2	5907	YEL 3MM LED 1V9 20MA.4SPCER T&R	R75		W125 33K 5% 0805 SMT RES
C52		100N 50V 5%CAP 0805 SMT X7R	LD3	5908	GRN 3MM LED 1V9 20MA.4SPCER T&R	R78		W125 4K7 5% 0805 SMT RES
C53		100N 50V 5%CAP 0805 SMT X7R	LD4	5906	RED 3MM LED 1V9 20MA.4SPCER T&R	R79		W125 4K7 5% 0805 SMT RES
C54		100N 50V 5%CAP 0805 SMT X7R	P3	4388	100K B LIN 9MM DETENT KNURL P30	R80		W125 33K 5% 0805 SMT RES
C55		100N 50V 5%CAP 0805 SMT X7R	P4	4388	100K B LIN 9MM DETENT KNURL P30	R81		W125 4K7 5% 0805 SMT RES
C57		_15P 50V 5%CAP 0603 SMT NPO	P5	4388	100K B LIN 9MM DETENT KNURL P30	R82		W125 4K7 5% 0805 SMT RES
C60		100N 50V 5%CAP 0805 SMT X7R	PCB1	M1310BLANK	2_OZ 2SD 65.32 SQIN 01PER E10P	R83		W125 33K 5% 0805 SMT RES
C61		100U 6V3 20%CAP 6.3X5.4 SMT ELE	Q1		MMBF4391LT1 NCH JFET SOT-23 SMT T&R	R84		W125 33K 5% 0805 SMT RES
C62		100N 50V 5%CAP 0805 SMT X7R	Q2		LM317S POS REG SMT TO263	R85		W125 33K 5% 0805 SMT RES
C63	5910	4700U 100V 10%CAP BLK 35X40MM 4PS	Q4		T810-600G-TR 8A TRIAC D2PAK SMT	R86		W125 33K 5% 0805 SMT RES
C64		_10U 25V 20%CAP 5X5.4 SMT EL	Q5		12.288MHZ CRYSTAL 4-PIN SMT	R87		W125 33K 5% 0805 SMT RES
C65		100N 50V 5%CAP 0805 SMT X7R	Q6		MMBTA14 NPN DARL SOT-23 SMT	R88		W125 33K 5% 0805 SMT RES
C66		100N 50V 5%CAP 0805 SMT X7R	Q8		MMBT3906LT1 PNP SOT-23 SMT T&R	R89		W125 33K 5% 0805 SMT RES
C67		100N 50V 5%CAP 0805 SMT X7R	Q9		MMBT5401 PNP SOT-23 SMT	R90		W125 33K 5% 0805 SMT RES
C68		100N 50V 5%CAP 0805 SMT X7R	Q10	5190	MBS4992 TO92 8V5 DIAC T&R	R91		W125 4K7 5% 0805 SMT RES
C69		__1U 50V 20%CAP 4.3X3.9 SMT ELC	R1		W125 4K7 5% 0805 SMT RES	R92		W125 4K7 5% 0805 SMT RES
C70		_10U 25V 20%CAP 5X5.4 SMT EL	R2		W125 4K7 5% 0805 SMT RES	R93		W125 4K7 5% 0805 SMT RES
C71		100N 50V 5%CAP 0805 SMT X7R	R3		W125 11K0 1% 0805 SMT RES	R94		W125 4K7 5% 0805 SMT RES
C72		100N 50V 5%CAP 0805 SMT X7R	R4		W125 11K0 1% 0805 SMT RES	R95		W125 4K7 5% 0805 SMT RES
C73		_47U 16V 20%CAP 6X5.4 SMT ELE	R5		W100 200R 1% 0805 SMT RES	R96		W125 4K7 5% 0805 SMT RES
C74		100N 50V 5%CAP 0805 SMT X7R	R6		W100 200R 1% 0805 SMT RES	R187		1W00 1K8 5% 2512 SMT RES
C75		100N 50V 5%CAP 0805 SMT X7R	R7		W125 4K7 5% 0805 SMT RES	R220		W250 10R 5% 1206 SMT RES
C76		100N 50V 5%CAP 0805 SMT X7R	R8		W100 200R 1% 0805 SMT RES	S3	3522	DPDT MINI PC VERT SNP ALT
C77		_47U 16V 20%CAP 6X5.4 SMT ELE	R9		W125 4K7 5% 0805 SMT RES	S4	3440	4PDT MINI VERT ALT SWITCH
C78		100N 50V 5%CAP 0805 SMT X7R	R10		W100 12K1 1% 0603 SMT RES	S8	3522	DPDT MINI PC VERT SNP ALT
C79		100N 50V 5%CAP 0805 SMT X7R	R11		W100 12K1 1% 0603 SMT RES	U1		SN74AC74DR DUAL FPFLOP SMT IC
C80		_47U 16V 20%CAP 6X5.4 SMT ELE	R12		W100 200R 1% 0805 SMT RES	U2		AK4620A VSOP-30 CODEC SMT IC
C81		100N 50V 5%CAP 0805 SMT X7R	R13		W125 1K02 0.1% 0805 SMT RES	U3		NE5532D DUAL OPAMP SMT SO-8
C82		__3N3 25V 5%CAP 0805 SMT NPO	R14		W125 18K00 0.1% 0805 SMT RES	U4		NE5532D DUAL OPAMP SMT SO-8
C83		100N 50V 5%CAP 0805 SMT X7R	R15		W125 10K00 0.1% 0805 SMT RES	U6		LM2671 3V3 REG 0A5 SMT SO8
C84		_47U 16V 20%CAP 6X5.4 SMT ELE	R16		FUSE SLOW 7A 125V SMT 6125	U7		MC9S08GT60 MICROCNTRLLER SMT QFP44
C85		100N 50V 5%CAP 0805 SMT X7R	R17		FUSE SLOW 7A 125V SMT 6125	U8		ADAU1401 28/56 DSP 2AD4DA SMT IC
C86		100N 50V 5%CAP 0805 SMT X7R	R18		W125 18K00 0.1% 0805 SMT RES	W1	6535	HEADER SIL (FEMALE) 26 SOCKET
C102	5242	100N 250V 20%CAP BLK 'X2' 15MM AC	R19		W125 10K00 0.1% 0805 SMT RES	W2		06 CIR DUAL ROW HDR VT 0.1SPC SMT
C104	5670	3300U 63V 20%CAP 18X40MM CUT5MM EL	R20		W125 1K800 0.1% 0805 SMT RES	W3	4145	9PIN 3X3 POWER PIN HEADER
C105	5860	3300U 35V 20%CAP BLK 16X35.5MM EL	R21		W125 1M 5% 0805 SMT RES	W4	3538	24 PIN BREAKAWAY LOCK .156
C106	5266	680N 250V 20%CAP BLK 'X2' 27MM AC	R22		W125 1K800 0.1% 0805 SMT RES	W7	2369	3 CIR PH-HEADER 2MM
C111	5860	3300U 35V 20%CAP BLK 16X35.5MM EL	R23		W125 330R 0.5% 0805 SMT RES	W7_	2369	3 CIR PH-HEADER 2MM
C112	6451	__4N7 250V 20%CAP BLK 'Y' 10MM AC	R24		W100 2K32 1% 0805 SMT RES	W12	2329	12 CIR XH-HEADER 0.098IN
C115	5670	3300U 63V 20%CAP 18X40MM CUT5MM EL	R25		W125 33K 5% 0805 SMT RES	W13	2327	6 CIR XH-HEADER 0.098IN
C118		__2N2 50V 10%CAP 0603 SMT COG	R26		W250 10R 5% 1206 SMT RES	W14	2327	6 CIR XH-HEADER 0.098IN
C123	5910	4700U 100V 10%CAP BLK 35X40MM 4PS	R27		W125 1K02 0.1% 0805 SMT RES	W15	2329	12 CIR XH-HEADER 0.098IN
D1		MM3Z10VT1G 10V0 0W2 5% SMT ZEN	R28		W125 30K 0.5% 0805 SMT RES	W30	4147	6 PIN POWER PIN HEADER MALE POLZED
D2		MM3Z10VT1G 10V0 0W2 5% SMT ZEN	R29		W125 1K800 0.1% 0805 SMT RES	W34	4147	6 PIN POWER PIN HEADER MALE POLZED
D3		CDSF4148 75V 0A15 1005 SMT	R30		W125 330R 0.5% 0805 SMT RES			
D4		CDSF4148 75V 0A15 1005 SMT	R31		W125 10K00 0.1% 0805 SMT RES			
D5		CDSF4148 75V 0A15 1005 SMT	R32		1W00 100K 5% 2512 SMT RES			
D6		MBRA340T3 40V 3A SHTKY 403D SMT	R33		W100 2K32 1% 0805 SMT RES			

M1311 Parts Reference List 8/27/2018

REF	YS #	Description	REF	YS #	Description	REF	YS #	Description
C1		__4N7 50V 5%CAP 1206 SMT NPO	D6		MBRA340T3 40V 3A SHTKY 403D SMT	R43		W125 4K7 5% 0805 SMT RES
C2		100N 25V 10%CAP 0805 SMT X7R	D7		MMBZ5231B 5V1 0W35 5% SMT ZEN	R44		W125 4K7 5% 0805 SMT RES
C3		100N 25V 10%CAP 0805 SMT X7R	D8		MM3Z18VT1G 18V0 0W2 5% SMT ZEN	R45		W125 10K00 0.1% 0805 SMT RES
C4		680P 50V 5%CAP SMT C0G	D9		ES1H 500V 1A0 D214 SMT SMC	R46		W125 330R 0.5% 0805 SMT RES
C5		680P 50V 5%CAP SMT C0G	D10		ES1H 500V 1A0 D214 SMT SMC	R47		W100 200R 1% 0805 SMT RES
C6		__4N7 50V 5%CAP 1206 SMT NPO	D48		ES3D 200V 3A0 D214 SMT SMC	R48		W250 10R 5% 1206 SMT RES
C7		680P 50V 5%CAP SMT C0G	D49		CDSF4148 75V 0A15 1005 SMT	R49		W250 10R 5% 1206 SMT RES
C8		_10U 25V 20%CAP 5X5.4 SMT EL	D50		CDSF4148 75V 0A15 1005 SMT	R50		W250 10R 5% 1206 SMT RES
C9		680P 50V 5%CAP SMT C0G	D51		ES3D 200V 3A0 D214 SMT SMC	R51		W250 10R 5% 1206 SMT RES
C10		_10U 25V 20%CAP 5X5.4 SMT EL	D52		ES3D 200V 3A0 D214 SMT SMC	R52		W100 475K 1% 0805 SMT RES
C11		__1N 50V 5%CAP 0805 SMT NPO	D53		ES3D 200V 3A0 D214 SMT SMC	R53		W100 475K 1% 0805 SMT RES
C12		__1N 50V 5%CAP 0805 SMT NPO	D54		ES3D 200V 3A0 D214 SMT SMC	R54		W125 4K7 5% 0805 SMT RES
C13		270P 50V 5%CAP 0805 SMT NPO	D55		ES3D 200V 3A0 D214 SMT SMC	R55		W125 1K800 0.1% 0805 SMT RES
C14		270P 50V 5%CAP 0805 SMT NPO	D56		ES3D 200V 3A0 D214 SMT SMC	R56		W125 33K 5% 0805 SMT RES
C15		_33U 25V 20%CAP 6.3X5.5 SMT EL	D57		ES3D 200V 3A0 D214 SMT SMC	R57		W250 22R 5% 1206 SMT RES
C16		__1U 50V 20%CAP 4.3X3.9 SMT ELC	D58		ES3D 200V 3A0 D214 SMT SMC	R58		W125 1K800 0.1% 0805 SMT RES
C17		_33U 25V 20%CAP 6.3X5.5 SMT EL	D59		ES3D 200V 3A0 D214 SMT SMC	R59		W125 1M 5% 0805 SMT RES
C18		__4U7 25V 20%CAP 4X5.5 SMT ELC	D60		ES3D 200V 3A0 D214 SMT SMC	R60		W100 274K 1% 0805 SMT RES
C20		_47P 50V 5%CAP 0805 SMT NPO	D61		ES3D 200V 3A0 D214 SMT SMC	R61	2487	_7.0 AMP SLO-BLO T&R FUSE
C21		100N 25V 10%CAP 0805 SMT X7R	D62		ES3D 200V 3A0 D214 SMT SMC	R62		W250 10R 5% 1206 SMT RES
C22		_10N 50V 5%CAP 1206 SMT NPO	D63		ES3D 200V 3A0 D214 SMT SMC	R63		W125 1K800 0.1% 0805 SMT RES
C23		100U 25V 20%CAP 8X5.4 SMT ELE	J1	4100	XLR MALE PCB MT VERT	R64		W125 1K02 0.1% 0805 SMT RES
C24		680U 6V3 20%CAP 8X10 SMT ELE	J3	6509	1/4"& XLR PCB MT VERT COMBO NEUTRIK	R65		W100 18K2 1% 0805 SMT RES
C26		100N 25V 10%CAP 0805 SMT X7R	L1	3759	___4UH COIL 14AWG ZOBEL VERTICAL	R66		W100 475R 1% 0805 SMT RES
C27		100N 25V 10%CAP 0805 SMT X7R	L2	6562	_192UH CHOKE 74T20AWG/77256MAGNTKS	R68		W250 10R 5% 1206 SMT RES
C28		_10U 25V 20%CAP 5X5.4 SMT EL	L3		_8.2UH COIL 1210 SMT	R98	2487	_7.0 AMP SLO-BLO T&R FUSE
C29		100N 25V 10%CAP 0805 SMT X7R	L5	6492	1300UH COIL COMMON MODE 4AMP	R187		1W00 1K8 5% 2512 SMT RES
C30		100N 25V 10%CAP 0805 SMT X7R	L56		120UH COIL A67 0R4 SMT	R220		W250 10R 5% 1206 SMT RES
C31		100N 25V 10%CAP 0805 SMT X7R	LD2	5907	YEL 3MM LED 1V9 20MA.4SPCER T&R	S3	3522	DPDT MINI PC VERT SNP ALT
C40		100N 100V 10%CAP 1206 SMT X7R	LD3	5908	GRN 3MM LED 1V9 20MA.4SPCER T&R	S4	3440	4PDT MINI VERT ALT SWITCH
C45		100N 25V 10%CAP 0805 SMT X7R	LD4	5906	RED 3MM LED 1V9 20MA.4SPCER T&R	S8	3522	DPDT MINI PC VERT SNP ALT
C48		100N 25V 10%CAP 0805 SMT X7R	P3	4388	100K B LIN 9MM DETENT KNURL P30	U1		SN74AC74DR DUAL FPFLOP SMT IC
C49		__2U2 100V 20%CAP 1812 SMT X7R	P4	4388	100K B LIN 9MM DETENT KNURL P30	U2		AK4620A VSOP-30 CODEC SMT IC
C50		__2U2 100V 20%CAP 1812 SMT X7R	P5	4388	100K B LIN 9MM DETENT KNURL P30	U3		NE5532D DUAL OPAMP SMT SO-8
C52		100N 25V 10%CAP 0805 SMT X7R	Q2		LM317S POS REG SMT TO263	U4		NE5532D DUAL OPAMP SMT SO-8
C53		100N 25V 10%CAP 0805 SMT X7R	Q4		T810-600G-TR 8A TRIAC D2PAK SMT	U6		LM2671 3V3 REG 0A5 SMT SO8
C54		100N 25V 10%CAP 0805 SMT X7R	Q5		12.288MHZ CRYSTAL 4-PIN SMT	U7		MC9S08GT60 MICROCNTRLLER SMT QFP44
C55		100N 25V 10%CAP 0805 SMT X7R	Q6		MMBTA14 NPN DARL SOT-23 SMT	U8		ADAU1701 28/56 DSP 2AD4DA SMT IC
C57		_15P 50V 5%CAP 0603 SMT NPO	Q7		MMBTA14 NPN DARL SOT-23 SMT	W2	4148	06 CIR DUAL ROW HDR VT 0.1
C60		100N 25V 10%CAP 0805 SMT X7R	Q8		MMBT3906LT1 PNP SOT-23 SMT T&R	W3	4145	9PIN 3X3 POWER PIN HEADER
C61		100U 6V3 20%CAP 6.3X5.4 SMT ELE	Q9		MMBT5401 PNP SOT-23 SMT	W4	3538	24 PIN BREAKAWAY LOCK .156
C62		100N 25V 10%CAP 0805 SMT X7R	Q10	5190	MBS4992 TO92 8V5 DIAC T&R	W6	6535	26 SKT 25SQ 100 SIL BOT-ENTRY
C63	5910	4700U 100V 10%CAP BLK 35X40MM 4PS	R1		W125 4K7 5% 0805 SMT RES	W7	2337	4 CIR XH-HEADER 0.098IN
C64		_10U 25V 20%CAP 5X5.4 SMT EL	R2		W125 4K7 5% 0805 SMT RES	W8	2337	4 CIR XH-HEADER 0.098IN
C65		100N 25V 10%CAP 0805 SMT X7R	R3		W125 4K7 5% 0805 SMT RES	W12	2329	12 CIR XH-HEADER 0.098IN
C66		100N 25V 10%CAP 0805 SMT X7R	R4		W125 4K7 5% 0805 SMT RES	W13	2327	6 CIR XH-HEADER 0.098IN
C67		100N 25V 10%CAP 0805 SMT X7R	R5		W100 200R 1% 0805 SMT RES	W14	2327	6 CIR XH-HEADER 0.098IN
C68		100N 25V 10%CAP 0805 SMT X7R	R6		W100 200R 1% 0805 SMT RES	W15	2329	12 CIR XH-HEADER 0.098IN
C69		__1U 50V 20%CAP 4.3X3.9 SMT ELC	R7		W125 4K7 5% 0805 SMT RES	W16	3949	G/Y 18AWG STRANDED GRN BASE YEL STR
C70		_10U 25V 20%CAP 5X5.4 SMT EL	R8		W100 200R 1% 0805 SMT RES	W17	3958	BLK 18AWG 36STND WIRE DOU/INS
C71		100N 25V 10%CAP 0805 SMT X7R	R9		W125 4K7 5% 0805 SMT RES	W18	3957	WHT 18AWG 36STND WIRE DOU/INS
C72		100N 25V 10%CAP 0805 SMT X7R	R10		W100 15K0 1% 0805 SMT RES	W21	3941	BLK 18AWG TR64 PREFUSED WIRE
C73		_47U 16V 20%CAP 6X5.4 SMT ELE	R11		W100 15K0 1% 0805 SMT RES	W22	3941	BLK 18AWG TR64 PREFUSED WIRE
C74		100N 25V 10%CAP 0805 SMT X7R	R12		W100 200R 1% 0805 SMT RES	W23	3941	BLK 18AWG TR64 PREFUSED WIRE
C75		100N 25V 10%CAP 0805 SMT X7R	R13		W125 1K02 0.1% 0805 SMT RES	W24	3941	BLK 18AWG TR64 PREFUSED WIRE
C76		100N 25V 10%CAP 0805 SMT X7R	R14		W125 18K00 0.1% 0805 SMT RES	W25	3941	BLK 18AWG TR64 PREFUSED WIRE
C77		_47U 16V 20%CAP 6X5.4 SMT ELE	R15		W125 10K00 0.1% 0805 SMT RES	W26	3941	BLK 18AWG TR64 PREFUSED WIRE
C78		100N 25V 10%CAP 0805 SMT X7R	R16		FUSE SLOW 7A 125V SMT 6125	W27	3941	BLK 18AWG TR64 PREFUSED WIRE
C79		100N 25V 10%CAP 0805 SMT X7R	R17		FUSE SLOW 7A 125V SMT 6125	W28	3941	BLK 18AWG TR64 PREFUSED WIRE
C80		_47U 16V 20%CAP 6X5.4 SMT ELE	R18		W125 18K00 0.1% 0805 SMT RES	W29	3941	BLK 18AWG TR64 PREFUSED WIRE
C81		100N 25V 10%CAP 0805 SMT X7R	R19		W125 10K00 0.1% 0805 SMT RES	W30	4147	6 PIN POWER PIN HEADER MALE POLZED
C82		__3N3 25V 5%CAP 0805 SMT NPO	R20		W125 1K800 0.1% 0805 SMT RES	W31	3941	BLK 18AWG TR64 PREFUSED WIRE
C83		100N 25V 10%CAP 0805 SMT X7R	R21		W125 1M 5% 0805 SMT RES	W32	3949	G/Y 18AWG STRANDED GRN BASE YEL STR
C84		_47U 16V 20%CAP 6X5.4 SMT ELE	R22		W125 1K800 0.1% 0805 SMT RES	W33	3949	G/Y 18AWG STRANDED GRN BASE YEL STR
C85		100N 25V 10%CAP 0805 SMT X7R	R23		W125 330R 0.5% 0805 SMT RES	X1	4599	22AWG SOLID SC WIR T&R JMP
C86		100N 25V 10%CAP 0805 SMT X7R	R24		W100 2K32 1% 0805 SMT RES			
C102	5242	100N 250V 20%CAP BLK 'X2' 15MM AC	R25		W125 33K 5% 0805 SMT RES			
C104	5912	2200U 63V 20%CAP RADIAL ELECT BULK	R26		W250 10R 5% 1206 SMT RES			
C105	5887	2200U 50V 20%CAP BLK 18X27MM EL	R27		W125 1K02 0.1% 0805 SMT RES			
C106	5266	680N 250V 20%CAP BLK 'X2' 27MM AC	R28		W125 30K 0.5% 0805 SMT RES			
C111	5887	2200U 50V 20%CAP BLK 18X27MM EL	R29		W125 1K800 0.1% 0805 SMT RES			
C112	6451	__4N7 250V 20%CAP BLK 'Y' 10MM AC	R30		W125 330R 0.5% 0805 SMT RES			
C115	5912	2200U 63V 20%CAP RADIAL ELECT BULK	R31		W125 10K00 0.1% 0805 SMT RES			
C118		__2N2 50V 10%CAP 0603 SMT COG	R33		W100 2K32 1% 0805 SMT RES			
C123	5910	4700U 100V 10%CAP BLK 35X40MM 4PS	R35		W125 1K02 0.1% 0805 SMT RES			
D1		MM3Z10VT1G 10V0 0W2 5% SMT ZEN	R36		W125 330R 0.5% 0805 SMT RES			
D2		MM3Z10VT1G 10V0 0W2 5% SMT ZEN	R37		W125 47R 5% 0805 SMT RES			
D3		CDSF4148 75V 0A15 1005 SMT	R40		W100 475R 1% 0805 SMT RES			
D4		CDSF4148 75V 0A15 1005 SMT	R41		W100 2K32 1% 0805 SMT RES			
D5		CDSF4148 75V 0A15 1005 SMT	R42		W100 100R 1% 0805 SMT RES			

M1495 Parts Reference List 8/27/2018

REF	YS #	Description	REF	YS #	Description	REF	YS #	Description
C1		100N 50V 5%CAP 0805 SMT X7R	Q21		MJB41C NPN D2PAK SMT TS	R81		W250 0R 1206 SMT RES
C2		22P 50V 5%CAP 0805 SMT NPO	R1		W125 470R 5% 0805 SMT RES	R82		W250 0R 1206 SMT RES
C3		4N7 50V 5%CAP 1206 SMT NPO	R2		47K 5% THERMISTOR NTC 0603 SMT	R83		W250 0R 1206 SMT RES
C4		10N 50V 5%CAP 1206 SMT NPO	R3		W250 0R 1206 SMT RES	R84		W250 0R 1206 SMT RES
C5		10N 50V 5%CAP 1206 SMT NPO	R4		W125 100K 5% 0805 SMT RES	R85		W250 0R 1206 SMT RES
C6		47P 50V 5%CAP 0805 SMT NPO	R5		W125 560R 5% 0805 SMT RES	R86		W250 0R 1206 SMT RES
C7		1U 25V 20%CAP 1206 SMT X7R	R6		10K 5% THERMISTOR NTC 0805 SMT	R87		W250 0R 1206 SMT RES
C8		100N 100V 10%CAP 1206 SMT X7R	R7		W125 47R 5% 0805 SMT RES	R88		W250 0R 1206 SMT RES
C9		100N 100V 10%CAP 1206 SMT X7R	R8		W250 10R 5% 1206 SMT RES	R89		W250 0R 1206 SMT RES
C10		470P 50V 5%CAP 0603 SMT NPO	R9		W125 10K 5% 0805 SMT RES	R90		W250 0R 1206 SMT RES
C11		470P 50V 5%CAP 0603 SMT NPO	R10		W125 1K5 5% 0805 SMT RES	R91		W125 47R 5% 0805 SMT RES
C12		1U 25V 20%CAP 1206 SMT X7R	R11		W125 10K 5% 0805 SMT RES	R98		W125 10K 5% 0805 SMT RES
C13		2U2 200V 20%CAP 3025 SMT CER	R12		W125 1K02 0.1% 0805 SMT RES	R99		W125 47R 5% 0805 SMT RES
C14		2U2 200V 20%CAP 3025 SMT CER	R13		W250 1M0 1% 1206 SMT RES	U1		33078 DUAL OPAMP SMT SO-8
C15		2U2 200V 20%CAP 3025 SMT CER	R14		W125 1M 5% 0805 SMT RES	U2		33078 DUAL OPAMP SMT SO-8
C16		2U2 100V 20%CAP 1812 SMT X7R	R15		W125 1M 5% 0805 SMT RES	U3		IRS20124S H/L FET DRIVER SMT SO14
C17		2U2 100V 20%CAP 1812 SMT X7R	R16		W125 2K2 5% 0805 SMT RES	U4		TLC555 TIMER SMT SO8 IC
C18		100N 50V 5%CAP 0805 SMT X7R	R17		W125 1M 5% 0805 SMT RES	U5		LM311 COMPARATOR IC SMT SO-8
C19		10N 50V 5%CAP 1206 SMT NPO	R18		W125 4K7 5% 0805 SMT RES	W1		26 PIN 25SQ 100 PIN SIL SMT
C20		100N 50V 5%CAP 0805 SMT X7R	R19		W125 10K 5% 0805 SMT RES			
C21		100N 50V 5%CAP 0805 SMT X7R	R20		W250 100R 5% 1206 SMT RES			
C22		100N 50V 5%CAP 0805 SMT X7R	R21		W125 560R 5% 0805 SMT RES			
C23		4U7 25V 20%CAP 4X5.5 SMT ELC	R22		W125 1K5 5% 0805 SMT RES			
C24		4N7 50V 5%CAP 1206 SMT NPO	R23		W125 150K 5% 0805 SMT RES			
C25		10P 50V 5%CAP 0402 SMT NPO	R24		W125 100K 5% 0805 SMT RES			
C26		10U 25V 20%CAP 5X5.4 SMT EL	R25		W125 10K 5% 0805 SMT RES			
C27		100N 50V 5%CAP 0805 SMT X7R	R26		W125 33K 5% 0805 SMT RES			
C28		47U 35V 20%CAP 6.3MM SMT ELE	R27		W125 270R 5% 0805 SMT RES			
C29		1U 50V 20%CAP 3.3MM SMT ELE	R28		W125 4K7 5% 0805 SMT RES			
C30		1U 50V 20%CAP 3.3MM SMT ELE	R29		W125 39K 5% 0805 SMT RES			
C31		100N 100V 10%CAP 1206 SMT X7R	R30		W250 10R 5% 1206 SMT RES			
C32		100N 100V 10%CAP 1206 SMT X7R	R31		W125 10K 5% 0805 SMT RES			
C33		100N 100V 10%CAP 1206 SMT X7R	R32		W125 3K92 1% 0805 SMT RES			
C34		1U 25V 20%CAP 1206 SMT X7R	R33		W125 20K 5% 0805 SMT RES			
C35		470P 50V 5%CAP 0603 SMT NPO	R34		W125 20K 5% 0805 SMT RES			
C36		100P 50V 10%CAP 0805 SMT NPO	R35		W125 20K 5% 0805 SMT RES			
C37		1N 50V 5%CAP 0805 SMT NPO	R36		W125 20K 5% 0805 SMT RES			
C38		1N 50V 5%CAP 0805 SMT NPO	R37		W125 3K92 1% 0805 SMT RES			
D2		CDSU4148 100V 0A15 0603 SMT	R38		W250 10R 5% 1206 SMT RES			
D3		CDSU4148 100V 0A15 0603 SMT	R39		W250 22R 5% 1206 SMT RES			
D4		MM3Z15VT1G 15V0 0W2 5% SMT ZEN	R40		W250 22R 5% 1206 SMT RES			
D5		CDSU4148 100V 0A15 0603 SMT	R41		W125 100K 5% 0805 SMT RES			
D6		MURA240T3 400V 2A 403D SMT	R42		W125 100K 5% 0805 SMT RES			
D8		MBRA340T3 40V 3A SHTKY 403D SMT	R43		W125 47R 5% 0805 SMT RES			
D9		MBRA340T3 40V 3A SHTKY 403D SMT	R44		W125 4K7 5% 0805 SMT RES			
D10		MM3Z15VT1G 15V0 0W2 5% SMT ZEN	R45		W100 100R 1% 0805 SMT RES			
D12		MM3Z12VT1G 12V0 0W2 5% SMT ZEN	R46		W125 470R 5% 0805 SMT RES			
D14		MM3Z10VT1G 10V0 0W2 5% SMT ZEN	R47		W125 1K5 5% 0805 SMT RES			
D15		MM3Z18VT1G 18V0 0W2 5% SMT ZEN	R48		W125 33K 5% 0805 SMT RES			
D16		1N914 DIODE SOT23 SMT	R49		W125 10K 5% 0805 SMT RES			
D17		MM3Z12VT1G 12V0 0W2 5% SMT ZEN	R50		W125 1K5 5% 0805 SMT RES			
D18		1N914 DIODE SOT23 SMT	R51		W125 1K5 5% 0805 SMT RES			
D19		1N914 DIODE SOT23 SMT	R52		W125 1K5 5% 0805 SMT RES			
D20		1N914 DIODE SOT23 SMT	R53		W125 560R 5% 0805 SMT RES			
D21		1N914 DIODE SOT23 SMT	R54		W125 270R 5% 0805 SMT RES			
D22		1N914 DIODE SOT23 SMT	R55		W500 2K2 5% 2010 SMT RES			
D23		1N914 DIODE SOT23 SMT	R56		W500 2K2 5% 2010 SMT RES			
D24		MM3Z15VT1G 15V0 0W2 5% SMT ZEN	R57		W250 100R 5% 1206 SMT RES			
D25		MURA240T3 400V 2A 403D SMT	R58		W500 2K2 5% 2010 SMT RES			
D26		MURA240T3 400V 2A 403D SMT	R59		W500 2K2 5% 2010 SMT RES			
Q1		MMBT5401 PNP SOT-23 SMT	R60		W250 100R 5% 1206 SMT RES			
Q2		MMBT5401 PNP SOT-23 SMT	R61		W125 470R 5% 0805 SMT RES			
Q3		MJD243T4G NPN DPAK3 SMT TS	R62		W125 470R 5% 0805 SMT RES			
Q4		MMBT3904 NPN SOT-23 SMT	R63		W250 0R27 5% 1206 SMT RES			
Q5		IRFS4227PBF NCH MFET D2PAK SMT TS	R64		W250 0R27 5% 1206 SMT RES			
Q6		IRFS4227PBF NCH MFET D2PAK SMT TS	R65		W250 0R27 5% 1206 SMT RES			
Q7		MC7815BDTG POS REG SMT DPAK3	R66		W250 0R27 5% 1206 SMT RES			
Q8		MC79M15CDTG NEG REG SMT DPAK3	R67		PTC RESETTABLE 1.5A 6V 1812L SMT			
Q9		MMBT5401 PNP SOT-23 SMT	R68		W250 0R 1206 SMT RES			
Q10		IRF530NS NCH MFET D2PAK SMT TS	R69		W250 0R 1206 SMT RES			
Q11		IRF9530NS PCH MFET D2PAK SMT TS	R70		W250 0R 1206 SMT RES			
Q12		MJD243T4G NPN DPAK3 SMT TS	R72		W250 0R 1206 SMT RES			
Q13		MJD243T4G NPN DPAK3 SMT TS	R73		W250 0R 1206 SMT RES			
Q14		MMBF4391LT1 NCH JFET SOT-23 SMT T&R	R74		W250 0R 1206 SMT RES			
Q15		MJB41C NPN D2PAK SMT TS	R75		W125 10K 5% 0805 SMT RES			
Q16		MJB42C PNP D2PAK SMT TS	R76		W250 0R 1206 SMT RES			
Q17		MMBT5401 PNP SOT-23 SMT	R77		W250 0R 1206 SMT RES			
Q18		MMBT5401 PNP SOT-23 SMT	R78		W250 0R 1206 SMT RES			
Q19		MJD253T4G PNP DPAK3 SMT TS	R79		W125 10K 5% 0805 SMT RES			
Q20		MJB42C PNP D2PAK SMT TS	R80		W250 0R 1206 SMT RES			

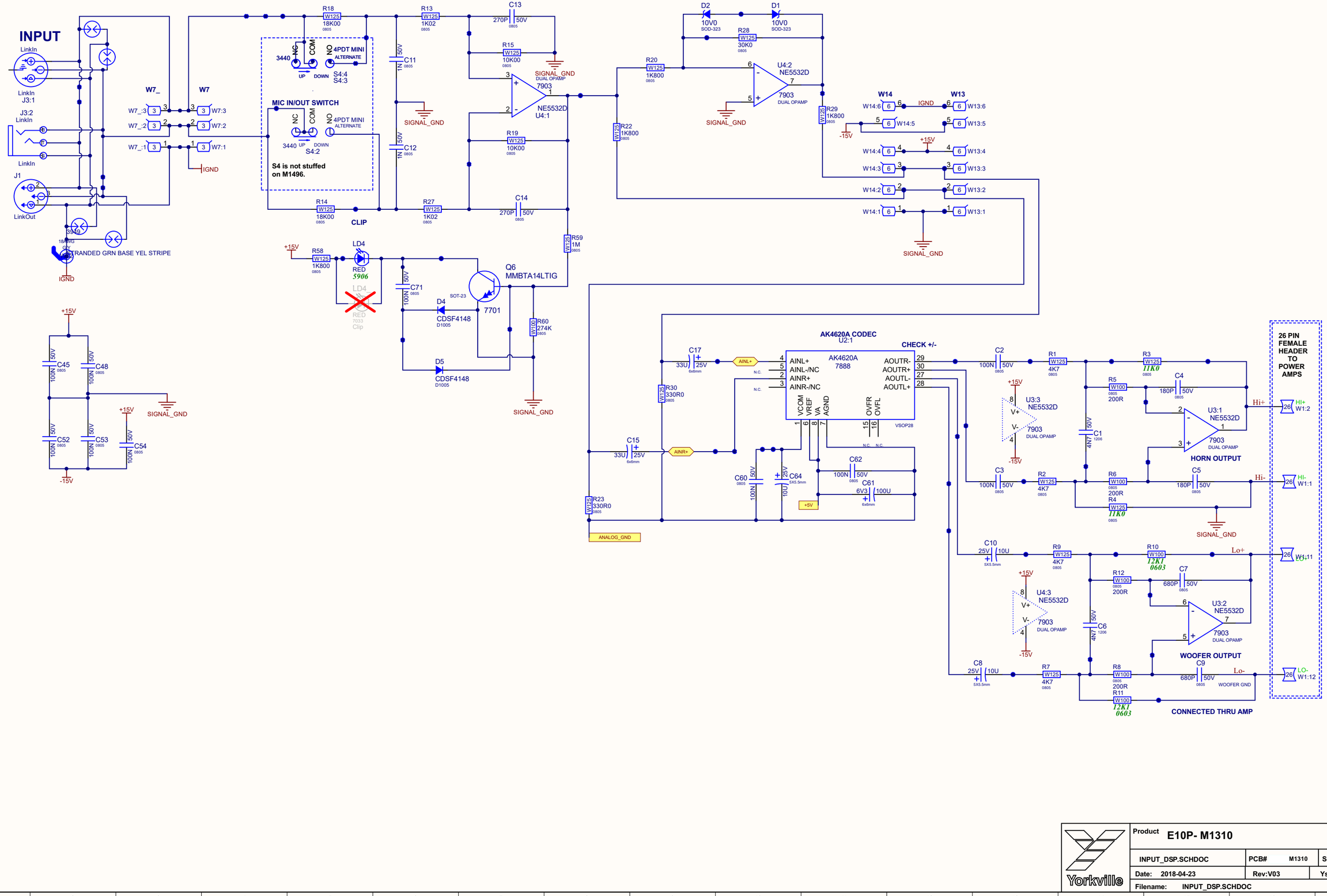

Yorkville	Product **E10P- M1310**		
	INPUT_DSP.SCHDOC	PCB# M1310	Sheet 1 of 4
	Date: 2018-04-23	Rev:V03	YsType:.
	Filename: INPUT_DSP.SCHDOC		

POWER

LD3 GRN 590n

LD3 GRN 7031 Power

R46 330R0 0805

C65 100N 0805

C66 100N 0805

C86 100N 0805

C85 100N 0805

C70 10U 6X5.5mm

ANALOG_GND

+3V3COD

Q5

Vdd GND OUT E/D

7894 OSCILLATOR 12.288

DIG_GND

L3 8200NH

R47 W100 0805 200R

+3V3

R66 475R0 0805

C82 3N3 25V 0805

C83 100N 50V 0805

C77 47U 16V 6X6mm

C78 100N 50V 0805

DIG_GND

C84 47U 16V 6X6mm

C73 47U 16V 6X6mm

C74 100N 50V 0805

C75 100N 50V 0805

C76 100N 50V 0805

+1V8 SUPPLY

Q8 MMBT3906LT1 7805 SOT23

R64 W125 1K02 0805

C80 47U 16V 6X6mm

C79 100N 50V 0805

C81 100N 50V 0805

U8 ADAU1701

W12 Board 1/2

W12 Board 2/2

W12:1 NET00097 W15:1
W12:2 NET00053 W15:2
W12:3 NET00048 W15:3
W12:4 NET00086 W15:4
W12:5 NET00054 W15:5
W12:6 NET00052 W15:6
W12:7 NET00087 W15:7
W12:8 NET00045 W15:8
W12:9 NET00085 W15:9
W12:10 NET00106 W15:10
W12:11 +3V3 W15:11
W12:12 DIG_GND W15:12

S4 is YS#3440 on M1311.
S4 is not stuffed on M1496.

8318 4PDT MINI ALTERNATE NET00085 DIG_GND NC COM NO 3440 UP DOWN McLaine S4:1

SWITCH FUNCTIONS

	E10P	PSA1
S3	LIVE / PLAYBACK	LOW FREQ CUT
S4	MIC / LINE	NOT USED
S8	SUB IN / OUT	HIGH FREQ BOOST

LQFP-48

CLK OSC MCLKI OSCO PLL_LF PGND MODE0 MODE1 PLL

N.C. CM FILTD VOUT0 VOUT1 VOUT2 VOUT3

AGND AVDD IOVDD DGND DVDD VDRIVE PVDD 1.8V Reg

28/56-BIT, 50 MHz AUDIO PROCESSOR CORE 40 ms DELAY MEMORY

ADC1 ADC0 ADC_RES FILTA RSVD

8-CH Digital Output | GPIO | 8-Bit Aux ADC | 8-CH Digital Input | Control Interface and Selfboot | Reset/ Mode Select

Input/Output Matrix

MP11 MP10 MP7 MP6 MP8 MP3 MP2 MP9 MP5 MP4 MP0 MP1

Bclk OUT LR CLK OUT N.C. N.C. N.C. N.C. Bclk IN LR CLK IN N.C.

SCL/CCLK SDA/COUT CLATCHWP ADDR1 ADDR0 CDATA/WB SELFBOOT RESETB

384kHz

POWER

ANALOG_GND

+3V3COD

VSOP28

AK4620A CODEC 7888 AK4620A U2:2

CKS1 CKS0 P/S ADMODE DEM0 DIF DGND VT VD DFS0 MCLK SDTI SDT0 BICK LRCK PDN

C20 47P 50V 0805

C57 15P 0603

R51 W250 10R 1206

R50 W250 10R 1206

R49 W250 10R 1206

R48 W250 10R 1206

BCLK

LR_CLK

R45 W125 10K00 0805

R43 W125 4K7 0805

R68 W250 10R 1206

U6 VDDINT TO DSP LM2671 7890

R33 W100 2K32 0805

C63

C22 10N 50V 1206

R37 W125 47R 0805

C23 100U 25V 8x8mm

L56 8108

D6 MBRA340T3 403D

C24 680U 16V3 8x8mm

LOW VOLTAGE SUPPLY

Kill3v3 R67 W125 1M 0805

Q1 MMBF4391LT1 7806 SOT-23

D11 18V0 SOD-323

PS_GND

U7

7906 MC9S08GT60 8-BITMicrocontroller 10-Bit ADC QFP44P

RESET IRQ

PORT A: PTA7/KBI1P7 PTA6/KBI1P6 PTA5/KBI1P5 PTA4/KBI1P4 PTA3/KBI1P3 PTA2/KBI1P2 PTA1/KBI1P1 PTA0/KBI1P0

PORT B: PTB7/AD1P7 PTB6/AD1P6 PTB5/AD1P5 PTB4/AD1P4 PTB3/AD1P3 PTB2/AD1P2 PTB1/AD1P1 PTB0/AD1P0

PORT C: PTC6 PTC5 PTC4 PTC3/SCL1 PTC2/SDA1 PTC1/RxD2 PTC0/TxD2

PORT D: PTD4/TPM2CH1 PTD3/TPM2CH0 PTD1/TPM1CH1 PTD0/TPM1CH0

PORT E: PTE5/SPSCK1 PTE4/MOSI1 PTE3/MISO1 PTE2/SS1 PTE1/RxD1 PTE0/TxD1

PORT G: PTG2/EXTAL PTG1/XTAL PTG0/BKGD/MS

BDM_PORT

C67 100N 0805

C68 100N 0805

C69 1U 4X4mm

DDAD SSAD VREFH VREFL VDD VSS

S3:2 S3:1 UP DOWN 3522

ANTI-FEEDBACK

2PDT MINI MOMENTARY 3439 S2:1 S2:2

S2 IS NOT STUFFED.

R52 475K 0805

R53 475K 0805

R44 4K7 0805

R54 4K7 0805

+80V +50V

POT FUNCTIONS

	E10P	PSA1
P3	GAIN	NOT USED
P4	BASS	LEVEL
P5	TREBLE	NOT USED

INPUT CONTROLS

MAKE SURE POTS AND SWITCHES ARE CORRECT ORIENTATION

P3:1 100K 4388 B LIN

P4:1 100K 4388 B LIN

P5:1 100K 4388 B LIN

P4:2 P3:2 P5:2

C27 100N 0805

C30 100N 0805

C31 100N 0805

C26 100N 0805

S8:2 S8:1 UP DOWN 3522

LD1 IS NOT STUFFED. LD1 SLU V554 ANTI FEEDBACK

R56 33K 0805

R41 2K32 0805

Q7 MMBTA14LTIG 7701

C29 0805

D3 CDSF4148 D1005

R40 475R0 0805

R42 100R 0805

LD2 YEL 5907 LIMIT

Q2 LM317S IN OUT TO263 7887

R36 330R0 0805

R35 1K02 0805

C21 100N 0805

+5V

R55 1K800 0805

R63 1K800 0805

C72 100N 0805

D7 5V1 SOT-23

U1:3 SN74AC74DR 7907 SO14

96kHz TO WOOFER AMP

96KHZ 96KHz W1:13

PART OF 26 PIN FEMALE MOLEX

C55 100N 0805

VCC

U1:2 SN74AC74DR 7907 SO14

U1:1 SN74AC74DR 7907 SO14

R62 W250 10R 1206

Yorkville

Product	E10P- M1310		
DSP.SCHDOC	PCB# M1310 M1493	Sheet 2 of 4	
Date: 2018-04-20	Rev:V08	YsType:.	
Filename: DSP.SCHDOC			

MAINS WIRING FOR PSA1

	BRK1	BRK2
NA	4A (#2456)	8A (#2408)
CE	4A (#2456)	4A (#2456)

IEC Power Outlet, ETA Thermal Breaker, SCH_ETA_BREAKER BRK2, IEC Power Inlet, IGND, ETA Thermal Breaker, SCH_ETA_BREAKER BRK1, Power Switch, IGND

MAINS WIRING FOR E10P

IEC Power Inlet+Fuse

CE: T2A (YS# 2403)
NA: T3 15A (YS# 2475)

Power Switch, IGND

18AWG GY 3949 W62, ACGND, STRANDED GRN BASE YEL STRIPE

C112 4N7 10MM 250V

AC-WHT1, AC-BLK1, C102 100N X2 18MM 250VAC, W17:1, W17:2, AC

6492 1300UH L5

C106 680N X2 27MM 250V

BLK/YEL, BRN, ORANGE, BLU, WHT

W30:1 W30:2 W30:3 W30:4 W30:5 W30:6

W34:1 W34:2 W34:3 W34:4 W34:5 W34:6

PIN 1, FEMALE CONNECTOR VIEWED FROM WIRE SIDE

ORN, BLK, BLU, BRN, BLK/YEL, WHT

CH1342U

SIGNAL_GND, DIG_GND, ANALOG_GND, PS_GND, LVGND, IGND

3949 18AWG GY W62, STRANDED GRN BASE YEL STRIPE, CTGND

AC_GND, R57 22R W250 1206, R187 1K8 1WX00 2512, C40 100N 1206 100V, PS_GND

CH1342U

PCB MALE CONNECTORS

MALE 9 PIN CONNECTOR FOR TRANSFORMER SECONDARYS

W3:1 VIO, W3:7 GRY, W3:3 RED, W3:2, W3:5 RED, W3:6 GRY, W3:4 VIO, W3:8 NC C89, W3:9 NC C88

MUTE ON/OFF

Kill3v3, SILENT, CDSF4148 D49 D1005, D50 CDSF4148 D1005, R24 W100 2K32 0805, R83 W125 33K 0805, R85 W125 33K 0805, D8 18V0 SOD-323, LVGND, C16 1U 50V 4X4mm, R31 W125 10K00 0805, R21 W125 1M 0805, C18 4U7 25V 4X4mm, Q9 SOT-23 MMBT5401 7837, -20V UNMUTE, MUTE

R16 7A 7895, R98 17.0 2487, R61 17.0 2487, R17 7A 7895

D51 D52 D53 D54 D55 D56 D57 D58 D59 D60 D61 S3D DO-214AB

+24V, C105 3300U 16X35MM 35V, C111 3300U 16X35MM 35V, -24V, PS_GND

+50V, R75 R34 R80 R84 R86 R88 R90 W125 33K 0805, C104 3300U 18X40MM 63V, C115 3300U 18X40MM 63V, -50V

+80V, R32 100K 1WX00 2512, C63 4700U 35X40MM 100V, C123 4700U 35X40MM 100V, R39 100K 1WX00 2512

MUTE, +80V W1:24, +80V_H W1:25, +80V W1:26, +44V W1:21, +24V W1:6, +24V W1:23, LVGND W1:8, +15V W1:10, -15V W1:4, -24V W1:7, -44V W1:9, -80V W1:14, -80V W1:16, -80V_H W1:5

D10 ES1H DO-214AC, D9 ES1H DO-214AC, +15V, -15V

ALL DIODES S3D 200V 3A0 DIO D214 SMT
PUT PADS UNDER HIGH CURRENT AND ALTERNATE

26 PIN FEMALE HEADER TO POWER AMPS

R91 R92 R81 R82 R78 R79 R96 R93 R94 R95 W125 4K7 0805

-80V, +80V, D63 D62 S3D DO-214AB, R25 33K W125 0805, Q10:1 MBS4992 TO92 5190, R26 W250 10R 1206, Q4 T810-600G-TR 7915 D2PAK MT2 MT1 G, C28 10U 125V 5X5.5mm, R69, Q10:2 NC

NOTE: ADD YS# 6562CORE TO BOM TO GET FULL COST OF COIL

L1 8283 4.7UH 12x12mm, HiOut, C118 2N2 50V 0603, R220 10R W250 1206, NET00046

L2 192UH 6562, LoOut, C50 2U2 1812 100V, C49 2U2 1812 100V

HORNGND, R70 PS_GND, W4:4 W4:3 W4:2 W4:1, _W4

SP5 HORN, SP1 WOOFER

OUTPUT

PART OF 26 PIN FEMALE MOLEX: HIOUT W1:17, HIOUT W1:15

PART OF 26 PIN FEMALE MOLEX: LOOUT W1:20, LOOUT W1:22, LOOUT W1:19, WGND W1:18

WGND

Product	E10P- M1310		
POWER SUPPLY.SCHDOC	PCB# E10P- M1310	Sheet	3 of 4
Date: 2018-04-20	Rev:V03	YsType:.	
Filename: POWER SUPPLY.SCHDOC			

Yorkville

DESIGN HISTORY AND INFORMATION

CHANGE HISTORY

#	DATE	VER#	PC#	DESCRIPTION OF CHANGE
1	04-OCT-2017	V02	.	RELEASED VERSION 2.
2	12-OCT-2017	.	.	Created new variant list showing parts with different values.
3	18-APR-2018	V03	9162	Added bleeder resistors to +/-24v and woofer output.
4	.	.	9163	Add more vias to 80V net
5	.	.	.	.
6	.	.	.	.
7	.	.	.	.
8	.	.	.	.
9	.	.	.	.
10	.	.	.	.
11	.	.	.	.
12	.	.	.	.
13	.	.	.	.

#	DATE	VER#	PC#	DESCRIPTION OF CHANGE
1	.	.	.	.
2	.	.	.	.
3	.	.	.	.
4	.	.	.	.
5	.	.	.	.
6	.	.	.	.
7	.	.	.	.
8	.	.	.	.
9	.	.	.	.
10	.	.	.	.
11	.	.	.	.
12	.	.	.	.
13	.	.	.	.

#	DATE	VER#	PC#	DESCRIPTION OF CHANGE
1	.	.	.	.
2	.	.	.	.
3	.	.	.	.
4	.	.	.	.
5	.	.	.	.
6	.	.	.	.
7	.	.	.	.
8	.	.	.	.
9	.	.	.	.
10	.	.	.	.
11	.	.	.	.
12	.	.	.	.
13	.	.	.	.

POTENTIOMETERS AND KNOBS

POTENTIOMETERS/SWITCHES AND KNOBS				
REF	FUNCTION	POT/SW YS#	STYLE	KNOB#
P3	LEVEL	4388	P30	.
P4	.	4388	.	.
P5	.	4388	.	.
.	.	.	.	.
.	.	.	.	.
.	.	.	.	.
.	.	.	.	.
.	.	.	.	.
.	.	.	.	.
.	.	.	.	.
.	.	.	.	.
.	.	.	.	.
.	.	.	.	.
.	.	.	.	.

PINOUT DIAGRAMS

THIS SHEET CONTAINS A CHANGE HISTORY LOG, A LIST OF THE POTS & KNOBS AND A LEADS & PINS REFERENCE SECTION.

Yorkville

Section:	Design Information And History				
Product(s):	E10P				
PCB#:	M1310	Rev#: V03	EML Rev#: 01	Sheet 4 Of 4	
Modified:	2018-04-23	File: M1310_History.SchDoc		Tmp Rev: V031	

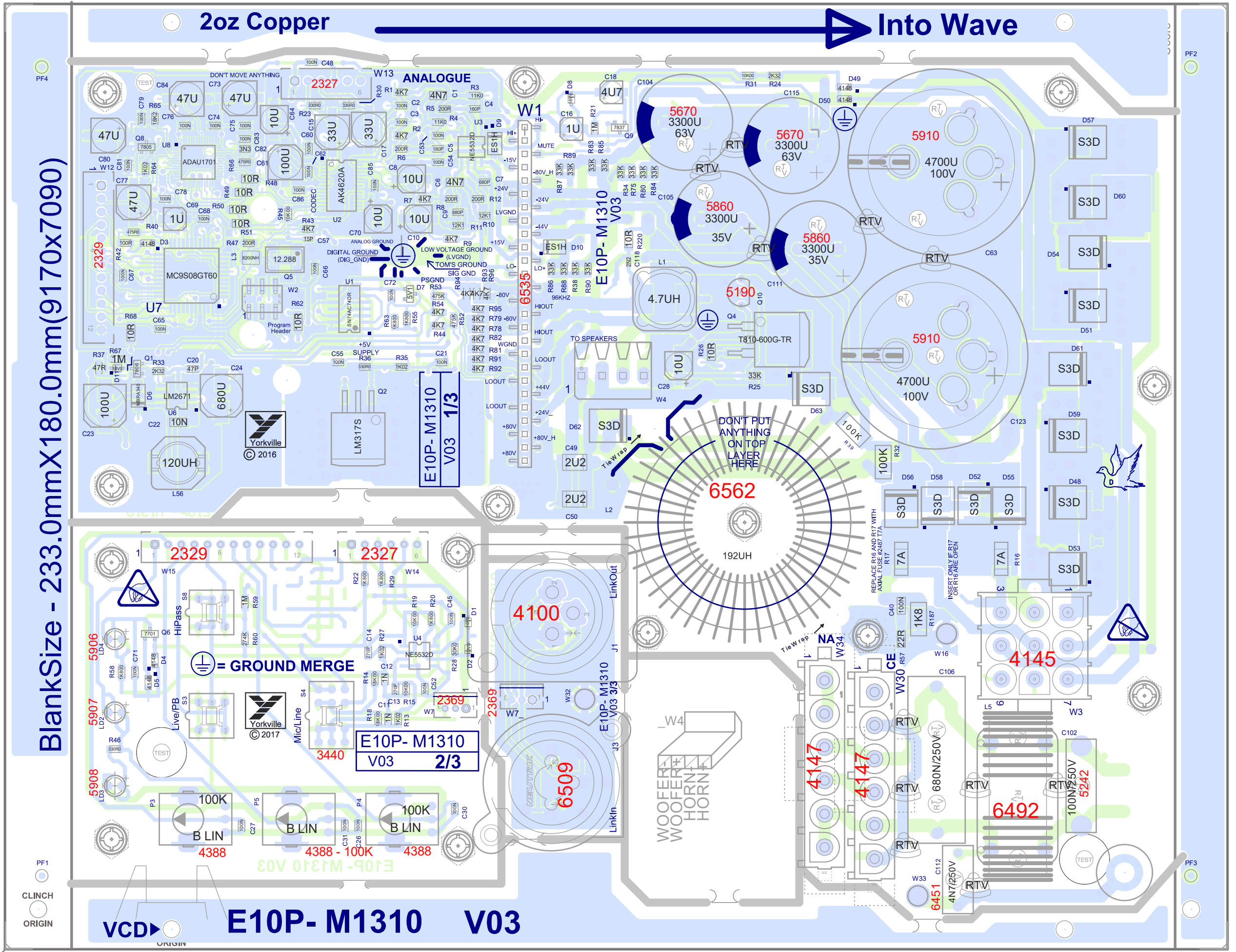

2oz Copper
Into Wave
BlankSize - 233.0mmX180.0mm(9170x7090)
ANALOGUE
DON'T MOVE ANYTHING
W13
2327
W1
6535
E10P- M1310
V03
1/3
5670
3300U
63V
5860
3300U
35V
5910
4700U
100V
5190
4.7UH
T810-600G-TR
TO SPEAKERS
DON'T PUT ANYTHING ON TOP LAYER HERE
6562
192UH
Tie W rap
2329
2327
4100
= GROUND MERGE
HiPass
Live/PB
Mic/Line
Yorkville
© 2017
3440
E10P- M1310
V03
2/3
2369
6509
LinkOut
LinkIn
WOOFER
HORN
NA
W34
CE
W30
4147
4145
6492
680N/250V
100N/250V
5242
6451
4N7/250V
100K
B LIN
4388
4388 - 100K
4388
PF1
CLINCH
ORIGIN
VCD
E10P- M1310 V03

PCB ASSEMBLY DOCUMENTATION

SPECIAL PRODUCTION NOTES

- ADD RTV BETWEEN C106, C112 AND W30 THE POWER CONNECTOR
- ADD YS#3822 1.25" HEATSHRINK AROUND J3
- PCBSA: DO NOT BREAK OUT BOARD BEFORE TESTING
- PCBSA: ADD M1607 CLIP TO YS#4100 XLR WITH RTV AS SHOWN.



RefDes	M1310
C29	DNS
LD1	DNS
LD2	5907
LD3	5908
LD4	5906
P3	Place Part
P4	Place Part
P5	4388 - 100K
Q7	DNS
R3	11K0
R4	11K0
R10	12K1
R11	12K1
R41	DNS
R56	DNS
R61	DNS
R98	DNS
S2	DNS
S4	Place Part
W17	DNS

PCB HARDWARE

THIS SHEET CONTAINS SPECIAL PRODUCTION NOTES AND A LIST OF PCB HARDWARE PARTS REQUIRED FOR THE BUILD.

Yorkville

Section:	Assembly Documentation				
Product(s):	E10P				
PCB#:	M1310	Rev#:	V03	EML Rev#:	01
Modified:	2018-04-23	File:	Assembly_M1310.SchDoc	Tmp Rev:	V031
Sheet	1	Of	*		

DESIGN HISTORY AND INFORMATION

CHANGE HISTORY

#	DATE	VER#	PC#	DESCRIPTION OF CHANGE
1	04-OCT-2017	V02	.	RELEASED VERSION 2.
2	12-OCT-2017	.	.	Created new variant list showing parts with different values.
3	18-APR-2018	V03	9162	Added bleeder resistors to +/-24v and woofer output.
4	.	.	9163	Add more vias to 80V net
5	.	.	.	.
6	.	.	.	.
7	.	.	.	.
8	.	.	.	.
9	.	.	.	.
10	.	.	.	.
11	.	.	.	.
12	.	.	.	.
13	.	.	.	.

#	DATE	VER#	PC#	DESCRIPTION OF CHANGE
1	.	.	.	.
2	.	.	.	.
3	.	.	.	.
4	.	.	.	.
5	.	.	.	.
6	.	.	.	.
7	.	.	.	.
8	.	.	.	.
9	.	.	.	.
10	.	.	.	.
11	.	.	.	.
12	.	.	.	.
13	.	.	.	.

#	DATE	VER#	PC#	DESCRIPTION OF CHANGE
1	.	.	.	.
2	.	.	.	.
3	.	.	.	.
4	.	.	.	.
5	.	.	.	.
6	.	.	.	.
7	.	.	.	.
8	.	.	.	.
9	.	.	.	.
10	.	.	.	.
11	.	.	.	.
12	.	.	.	.
13	.	.	.	.

POTENTIOMETERS AND KNOBS

POTENTIOMETERS/SWITCHES AND KNOBS				
REF	FUNCTION	POT/SW YS#	STYLE	KNOB#
P3	LEVEL	4388	P30	.
P4	.	4388	.	.
P5	.	4388	.	.
.	.	.	.	.
.	.	.	.	.
.	.	.	.	.
.	.	.	.	.
.	.	.	.	.
.	.	.	.	.
.	.	.	.	.
.	.	.	.	.
.	.	.	.	.
.	.	.	.	.
.	.	.	.	.

PINOUT DIAGRAMS

THIS SHEET CONTAINS A CHANGE HISTORY LOG, A LIST OF THE POTS & KNOBS AND A LEADS & PINS REFERENCE SECTION.

Yorkville

Section:	Design Information And History				
Product(s):	E10P				
PCB#:	M1310	Rev#: V03	EML Rev#: 01	Sheet 4 Of 4	
Modified:	2018-04-23	File: M1310_History.SchDoc		Tmp Rev: V031	

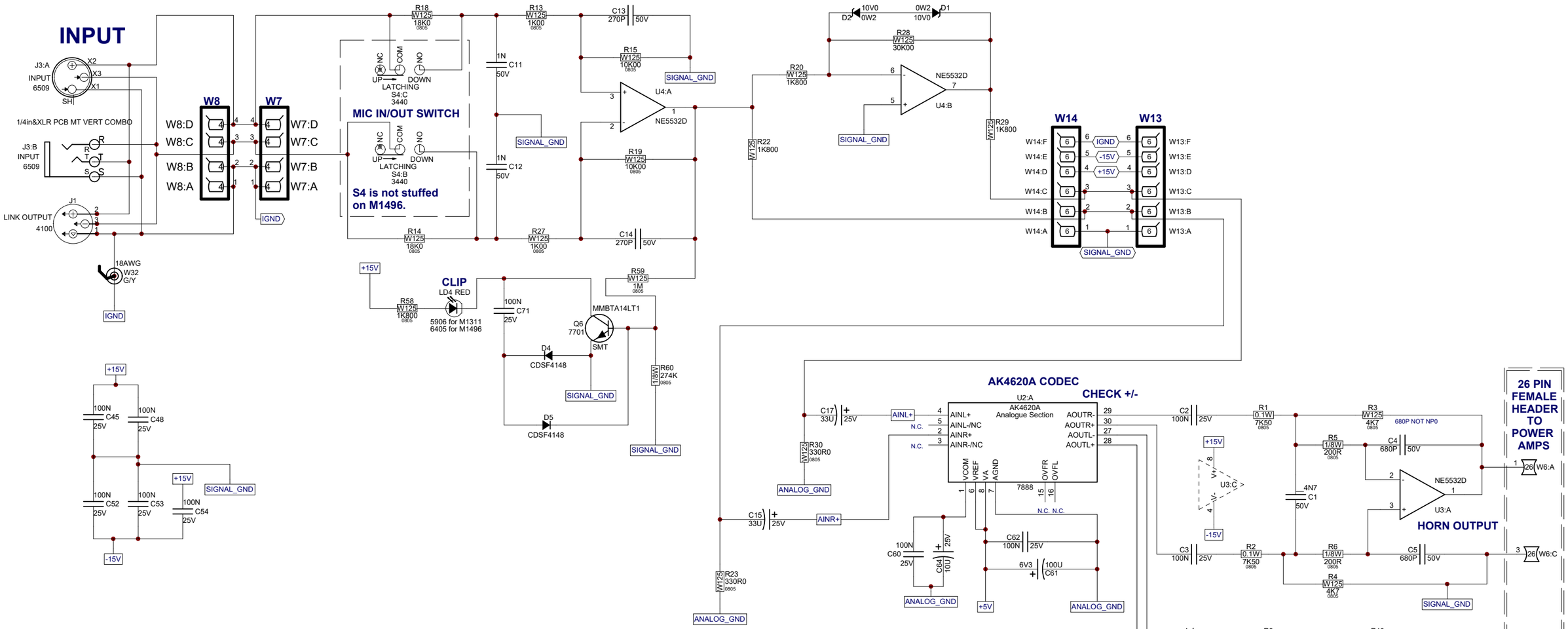

PARTS REFERENCE TABLE

REF DES	M1311 (E10P)	M1496 (PSA1)
P3	4388	DNS
P4	4388	DNS
P5	4388	4459
S4	3440	DNS
LD2	5907	6400
LD3	5908	6408
LD4	5906	6405
X1	4599	DNS
X2	DNS	4599

POTENTIOMETERS/SWITCHES AND KNOBS

MODEL(S):-E10P M1311 .

REF	FUNCTION	POT/SW YS#	KNOB
P3	LEVEL	4388	K
P4	BASS	4388	K
P5	TREBLE	4388	K
S3	LIVE/PLAYBACK	3522	8632
S4	MIC/LINE	3440	8632
S8	SUB IN/SUB OUT	3522	8632
R	F	P	K
R	F	P	K
R	F	P	K
R	F	P	K
R	F	P	K
R	F	P	K

POTENTIOMETERS/SWITCHES AND KNOBS

MODEL(S):-PSA1 M1496 .

REF	FUNCTION	POT/SW YS#	KNOB
P5	LEVEL	4459	8653
S3	LF CUT	3522	8637
S8	HF BOOST	3522	8637
R	F	P	K
R	F	P	K
R	F	P	K
R	F	P	K
R	F	P	K
R	F	P	K
R	F	P	K
R	F	P	K
R	F	P	K

M1311 / M1496 - PCB_DATABASE_HISTORY

MODEL(S):- E10P/PSA1

#	DATE	VER#	DESCRIPTION OF CHANGE
1	17-APR-2011	V04	DERIVED FROM M1311V03
2	16-JUN-2011	.	PC82xx: XH conn DS pads, add PCB title. GG
3	31-OCT-2011	V05	PC8322: CHANGED W7 & W8 to XH CONN. - ML
4		.	PC8318: UPDT YS#7896 - CHANGED 'C56' to 'L56' - ML
5	25-NOV-2011	V05	FORCE UPDATED SMT PARTS - FIXED LAYOUT. - ML
6	11-JAN-2012	.	PC8361: CONSOLIDATED SMT RESISTORS. - ML
7	06-MAR_2012	V06	PC8385: Replace L56 #7896 with #8108 GG
8	D	.	Add SCORE lines on the sides. GG
9	12-JUL-2012	.	PC8458 - Changed P5 from 4435 to 4459 for PSA1. - ML
10	14-AUG-2012	.	PC8461: Breakers changed for PSA1 - ML
11	26-MAR-2013	.	PC8501: Updated fiducials to 50mil diameter. - ML
12	11-OCT-2013	V07	PC8578 & 8580: Replaced J3 and J4 XLR jacks. - ML
13	20-JAN-2015	V08	PC8734:Implemented on board.
14	06-JUN-1017	.	PC9015: Change R1 and R2 to 7K5 YS#7822

Yorkville

Product **E10P(M1311) / PSA1(M1496)**

INPUT/DSP | PCB# M1311 M1496 | Sheet 1 of 3

Date: Mon Jun 05, 2017 | Rev:V08 | YsType:.

Filename: X8019V08SCH.sch2006

POWER

+3V3 — W125 R46 330R0 0805 — LD3 GRN — 5908 for M1311, 6408 for M1496 — DIG_GND

+3V3 — C65 100N 25V — DIG_GND

+3V3 — C66 100N 25V — DIG_GND

+3V3COD — C86 100N 25V — C85 100N 25V — C70 10U 25V — ANALOG_GND

+3V3 — Q5 7894 OSCILLATOR (Vdd, GND, OUT, E/D) — CWX823-12.288 — DIG_GND

L3 8200NH 7941

R47 1/8W 200R 0805

+3V3 — R66 1/8W 475R0 0805 — C82 3N3 25V — C83 100N 25V — DIG_GND

+3V3 — C77 47U 16V — C78 100N 25V — DIG_GND

DIG_GND — C73 16V 47U — C74 100N 25V — C75 100N 25V — C76 100N 25V

+1V8 SUPPLY

SOT23 7805 Q8 MMBT3906LT1 — R64 W125 1K00 0805 — +3V3

+3V3 — C80 47U 16V — C79 100N 25V — C81 100N 25V — DIG_GND

C84 47U 16V — DIG_GND

N.C.

U8 ADAU1701 28/56-BIT, 50 MHz AUDIO PROCESSOR CORE 40 ms DELAY MEMORY 7905

CLK OSC (CM, FILTD, MCLKI, OSCO) — PLL (PLL_TM, PGND, MODE0, MODE1) — PVDD 1.8V Reg (VDRIVE)

DAC (VOUT0, VOUT1) — DAC (VOUT2, VOUT3)

ADC1 Stereo ADC ADC0 — ADC_RES — FILTA

8-CH Digital Output — GPIO — 8-Bit Aux ADC — 8-CH Digital Input — Control Interface and Selfboot — Reset/ Mode Select — RSVD

Input/Output Matrix (MP1, MP10, MP7, MP6, MP8, MP3, MP2, MP9, MP5, MP4, MP0, MP1)

SCL/CCLK, SDA/CDOUT, CLATCH/I2C, ADDR1/CDATA/CIN, ADDR0, SELFBOOT, RESETB

Bclk_OUT, R_CLK_OUT, Bclk_IN, LR_CLK_IN

N.C. N.C. N.C. N.C. N.C. N.C. N.C. N.C. N.C. N.C.

R65 0.1W 18K2 0805 — DIG_GND

384kHz

POWER

+3V3COD — ANALOG_GND — 7888 (DGND, VT, VD) — AK4620A CODEC (Digital Section AK4620A) U2:B

CKS1, CKS0, P/S, ADMODE, DEM0, DIF

DFS0, MCLK, SDTI, SDTO, BICK, LRCK, PDN

C20 47P 50V

R51 W250 10R 0805 — R50 W250 10R 0805 — R49 W250 10R 0805 — R48 W250 10R 0805

15P C57 16V — ANALOG_GND

BCLK — LR_CLK

VDDINT TO DSP

+15V — PS_GND — R37 W125 47R 0805 — U6 7890 LM2671M-ADJ (VIN, ON/OFF, SS, SYNC, FB, GND, CB, VSW) — C23 100U 25V

C22 10N 50V — L56 8108 120UH — MBRA340T3 D6 {Voltage} — C24 680U 6V3

+3V3 — +3V3COD — R68 10R 1206 W250

R33 1/8W 2K32 0805

R45 10K00 0805 W125 — ANALOG_GND

R43 W125 4K7 0805 — ANALOG_GND

LOW VOLTAGE SUPPLY

Q3 DNS LM317S (IN, OUT, REF/ADJ) 7887 TO263 — +3V3COD

DNS C25 100N 25V — DNS R39 W125 1K00 — DNS R38 W125 1K800 — ANALOG_GND

Q1 DNS LM317S 7887 TO263 — DNS C19 100N 25V — DNS R32 W125 330R0 0805 — DNS R34 1/8W 2K32 0805

Q2 LM317S 7887 TO263 — +5V

C21 100N 25V — R36 W125 330R0 0805 — R35 W125 1K00 — PS_GND

These parts are not inserted.

+15V — R55 W125 1K800 0805 — R63 W125 1K800 0805 — VCC

5V1 D7 {Voltage} 0W35 — C72 100N 25V — VCC GND 7907 U1:C — DIG_GND

+5V — C55 100N 25V — PS_GND

BDM_PORT

W2:A W2:B W2:C W2:D W2:E W2:F — N.C. N.C. — DIG_GND — +3V3

96kHz TO WOOFER AMP

W6:K 26 11 — PART OF 26 PIN FEMALE MOLEX

VCC — 2CLR 2CLK 2D 2PRE 2Q — 1CLR 1CLK 1D 1PRE 1Q — U1:B 7907 — U1:A 7907

R62 W250 10R 0805

U7 MC9S08GT60 8-BITMicrocontroller 7906

RESET, IRQ — DIG_GND

+3V3 — 100N C67 25V — DIG_GND

10-Bit ADC (DDAD, SSAD, VREFH, VREFL)

100N C68 25V — 1U C69 50V — DIG_GND

VDD, VSS

PORT A: PTA7/KBI1P7, PTA6/KBI1P6, PTA5/KBI1P5 N.C., PTA4/KBI1P4 N.C., PTA3/KBI1P3, PTA2/KBI1P2, PTA1/KBI1P1, PTA0/KBI1P0

PORT B: PTB7/AD1P7, PTB6/AD1P6, PTB5/AD1P5 N.C., PTB4/AD1P4 N.C., PTB3/AD1P3, PTB2/AD1P2, PTB1/AD1P1, PTB0/AD1P0 — TO PIN 6 OF W12

PORT C: PTC6, PTC5, PTC4, PTC3/SCL1 N.C., PTC2/SDA1 N.C., PTC1/RxD2 N.C., PTC0/TxD2 N.C.

PORT D: PTD4/TPM2CH1 N.C., PTD3/TPM2CH0 N.C., PTD1/TPM1CH1 N.C., PTD0/TPM1CH0

PORT E: PTE5/SPSCK1, PTE4/MOSI1, PTE3/MISO1, PTE2/SS1, PTE1/RxD1 N.C., PTE0/TxD1 N.C.

PORT G: PTG2/EXTAL, PTG1/XTAL N.C., PTG0/BKGD/MS

CDSF4148 D3 — R42 1/8W 100R 0805 — R40 1/8W 475R0 0805

+3V3 — LD2 YEL — LIMIT — 6400 for M1496, 5907 for M1311

R56 W125 33K 0805 — R41 1/8W 2K32 0805 — MMBTA14LT1 Q7 7701 SMT

LD1 IS NOT STUFFED. — +15V — LD1 BLU DNS — ANTI FEEDBACK

C29 100N 25V — DIG_GND

+3V3 — C26 100N 25V — N.C. — DIG_GND

C27 100N 25V — C30 100N 25V — C31 100N 25V — DIG_GND

P3 100K B LIN 4388 — P4 100K B LIN 4388 — P5 100K B LIN 4388

S8:A LATCHING 3522 (UP, COM, DOWN, NO) — DIG_GND

S4 is YS#3440 on M1311.
S4 is not stuffed on M1496.

S4:A LATCHING (UP, NC, COM, NO, DOWN) — DIG_GND

S3:A 3522 LATCHING (UP, NC, COM, DOWN, NO) — DIG_GND

ANTI-FEEDBACK

S2:A 3439 MOMENTARY (NC, COM, NO, UP, DOWN) — DIG_GND

S2 IS NOT STUFFED.

+80V — R52 1/8W 475K 0805 — W125 R44 4K7 0805 — DIG_GND

+44V — R53 1/8W 475K 0805 — W125 R54 4K7 0805 — DIG_GND

W12_Board 1/2 — W15_Board 2/2

W12:A W12:B W12:C W12:D W12:E W12:F W12:G W12:H W12:I W12:J W12:K W12:L — W15:A W15:B W15:C W15:D W15:E W15:F W15:G W15:H W15:I W15:J W15:K W15:L — +3V3 — DIG_GND

SWITCH FUNCTIONS

	E10P	PSA1
S3	LIVE / PLAYBACK	LOW FREQ CUT
S4	MIC / LINE	NOT USED
S8	SUB IN / OUT	HIGH FREQ BOOST

POT FUNCTIONS

	E10P	PSA1
P3	GAIN	NOT USED
P4	BASS	LEVEL
P5	TREBLE	NOT USED

INPUT CONTROLS

MAKE SURE POTS AND SWITCHES ARE CORRECT ORIENTATION

+3V3

Yorkville	Product	E10P(M1311) / PSA1(M1496)
	DSP	PCB# M1311 M1496 — Sheet 2 of 3
	Date: Mon Jun 05, 2017	Rev:V08 — YsType:.
	Filename: X8019V08SCH.sch2006	

MAINS WIRING FOR PSA1

	BRK1	BRK2
NA	4A (#2456)	8A (#2408)
CE	4A (#2456)	4A (#2456)

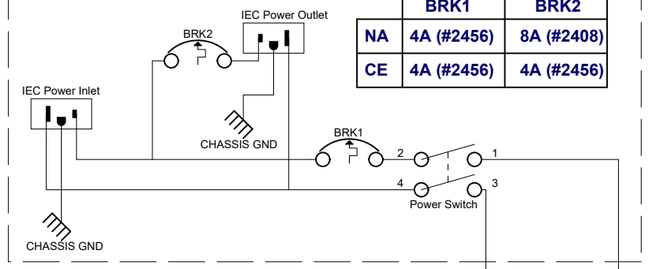

MAINS WIRING FOR E10P

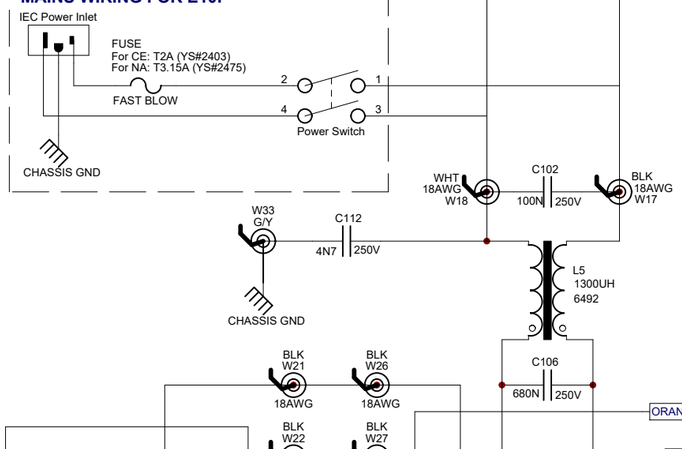

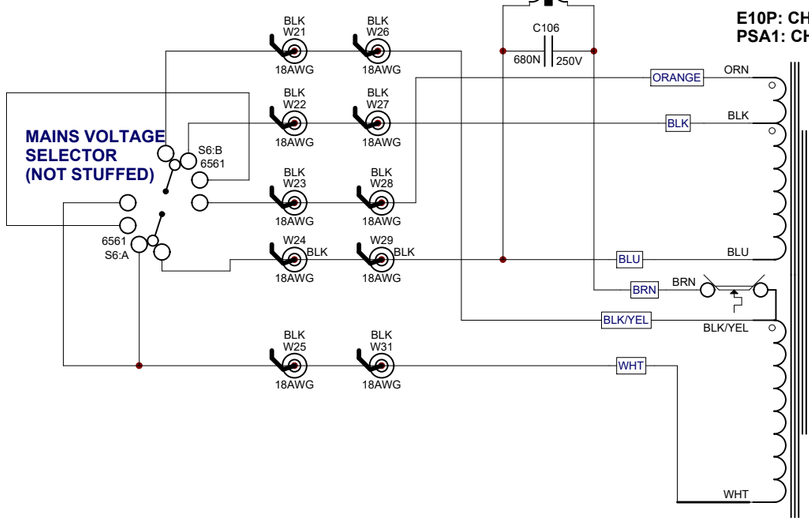

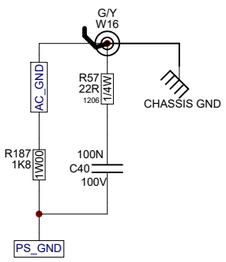

PCB MALE CONNECTORS

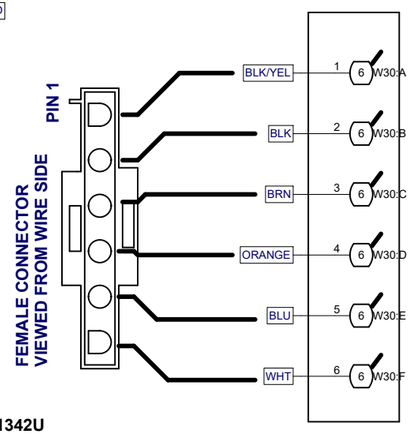

E10P: CH1342U
PSA1: CH1341U

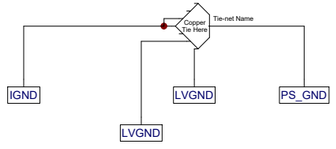

MUTE ON/OFF

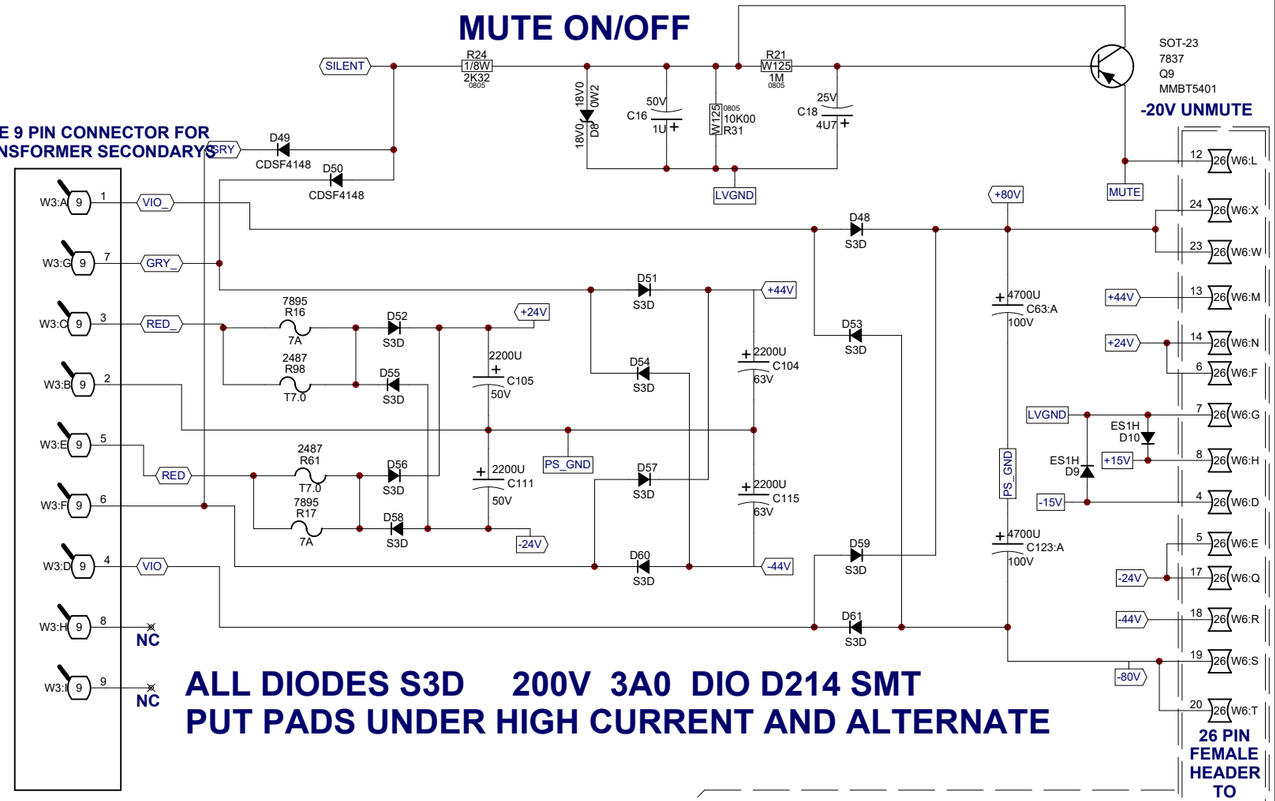

ALL DIODES S3D 200V 3A0 DIO D214 SMT
PUT PADS UNDER HIGH CURRENT AND ALTERNATE

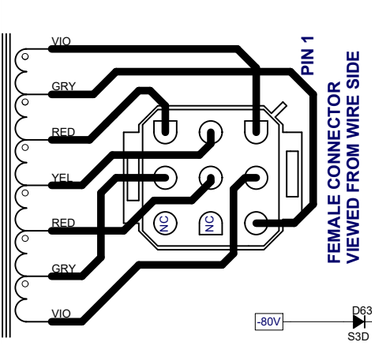

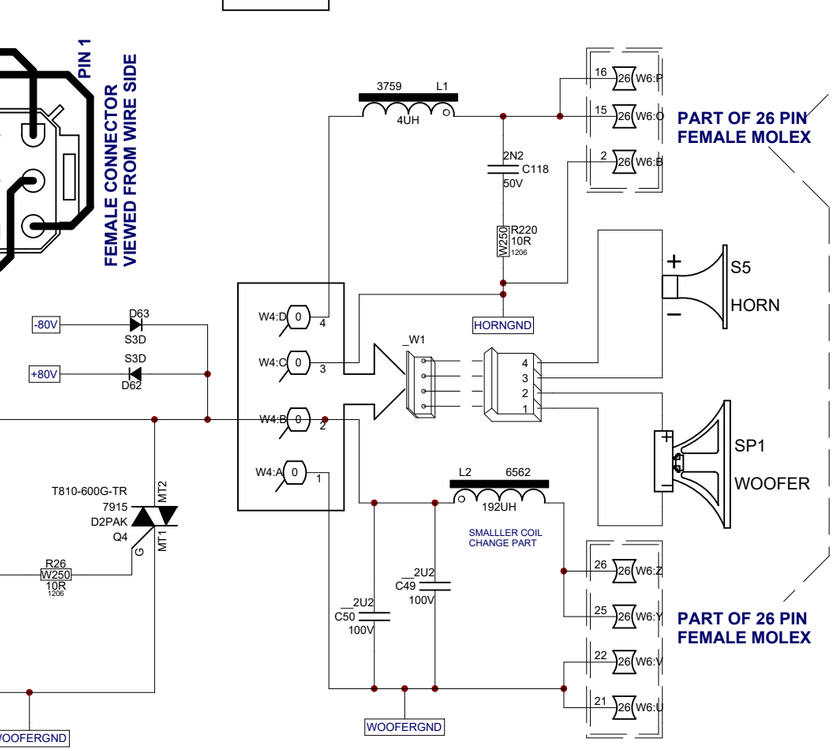

Yorkville	Product	E10P(M1311) / PSA1(M1496)	
	POWER SUPPLY	PCB# M1311 M1496	Sheet 3 of 3
	Date: Mon Jun 05, 2017	Rev:V08	YsType:.
	Filename: X8019V08SCH.sch2006		

13 20-JAN-2015 V08 PC8734:Implemented on board.

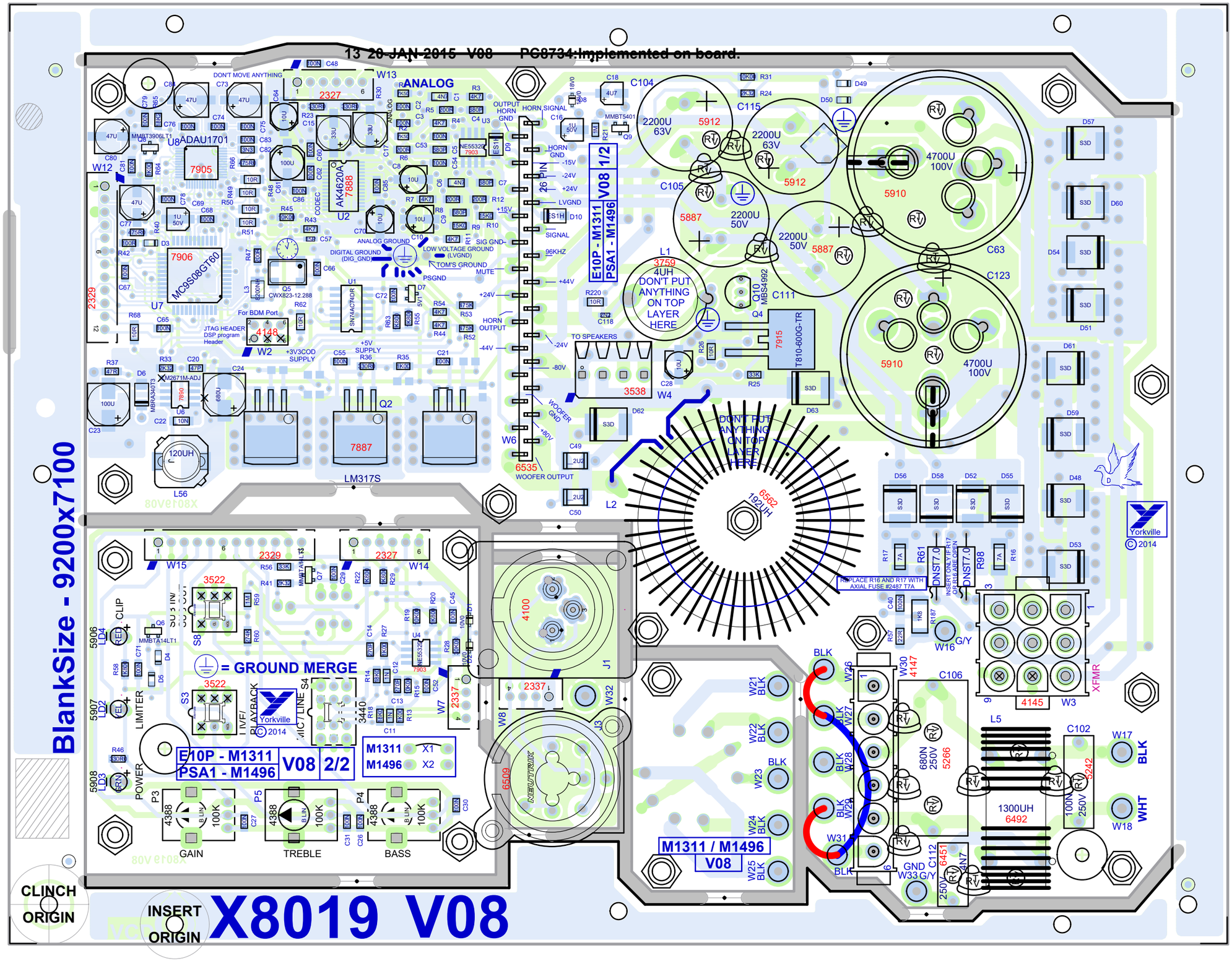

M1311 V08

SEE PRODUCTION NOTES

E10P

SEE LAYOUT DIAGRAM

M1311 V08 PRODUCTION NOTES

1. B.A. STUFF X1 FIRST.
2. B.A. ADD RTV BETWEEN C106, C112 AND W30 THE POWER CONNECTOR
3. B.A. ADD RTV UNDER J3 XLR.
4. B.A. DO NOT STUFF S2 AND LD1.
5. B.A. ADD YS#3822 1.25" HEATSHRINK AROUND J3
6. B.A. DO NOT STUFF S6
7. B.A. FOR N.A. BOARDS ADD 18AWG JUMPER FROM W26 TO W27 AND FROM W29 TO W31
8. B.A. FOR CE BOARDS ADD 18AWG JUMPER FROM W27 TO W31
9. PCBSA: DO NOT BREAK OUT BOARD BEFORE TESTING
10. PCBSA: ADD M1607 CLIP TO YS#4100 XLR WITH RTV AS SHOWN.

X8019 PARTS REFERENCE TABLE

REF DES	M1311 (E10P)	M1496 (PSA1)
P3	4388	DNS
P4	4388	DNS
P5	4388	4459
S4	3440	DNS
LD2	5907	6400
LD3	5908	6408
LD4	5906	6405
X1	4599	DNS
X2	DNS	4599



SEE PRODUCTION NOTES

POTENTIOMETERS/SWITCHES AND KNOBS

MODEL(S):-E10P M1311 .

REF	FUNCTION	POT/SW YS#	KNOB
P3	LEVEL	4388	K
P4	BASS	4388	K
P5	TREBLE	4388	K
S3	LIVE/PLAYBACK	3522	8632
S4	MIC/LINE	3440	8632
S8	SUB IN/SUB OUT	3522	8632
R	F	P	K
R	F	P	K
R	F	P	K
R	F	P	K
R	F	P	K
R	F	P	K

M1311 - PCB_DATABASE_HISTORY

MODEL(S):- E10P

#	DATE	VER#	DESCRIPTION OF CHANGE
1	17-APR-2011	V04	DERIVED FROM M1311V03. PC 8242
2	16-JUN-2011	.	PC82xx: XH conn DS pads, add PCB title. GG
3	31-OCT-2011	V05	PC8322: CHANGED W7 & W8 TO XH CONN. - ML
4	.	.	PC8318: UPDT YS#7896 - CHANGED 'C56' to 'L56' - ML
5	25-NOV-2011	V05	FORCE UPDATED SMT PARTS - FIXED LAYOUT. - ML
6	11-JAN-2012	.	PC8361: CONSOLIDATED SMT RESISTORS. - ML
7	06-MAR_2012	V06	PC8385: Replace L56 #7896 with #8108 GG
8	D	.	Add SCORE lines on the sides GG
9	12-JUL-2012	.	PC8458 - Changed P5 from 4435 to 4459 for PSA1. - ML
10	14-AUG-2012	.	PC8461: Breakers changed for PSA1 - ML
11	26-MAR-2013	.	PC8501: Updated fiducials to 50mil diameter. - ML
12	11-OCT-2013	V07	PC8578 & 8580: Replaced J3 and J4 XLR jacks. - ML
13	20-JAN-2015	V08	PC8734:Implemented on board.
14	06-JUN-1017	.	PC9015: Change R1 and R2 to 7K5 YS#7822

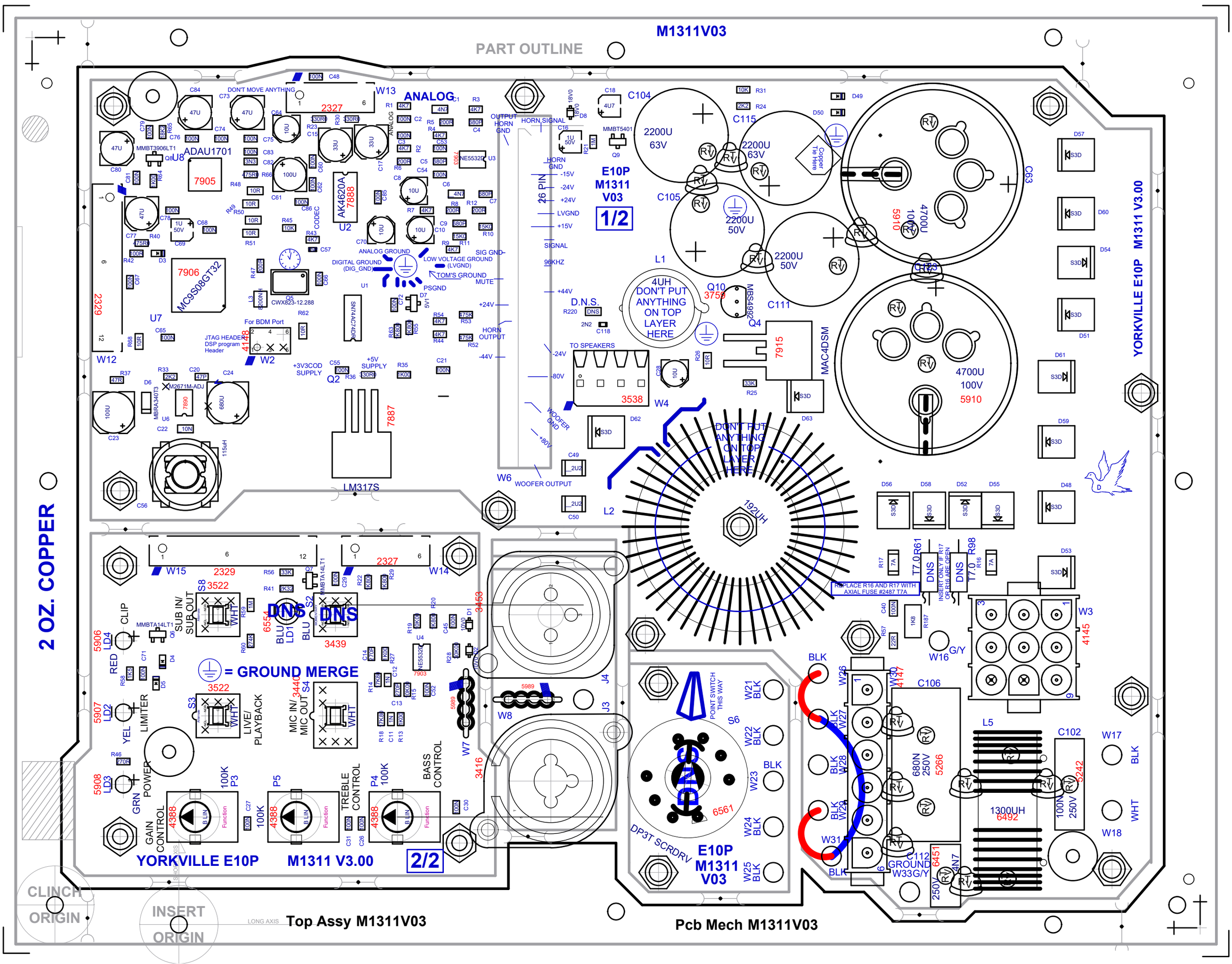

M1311V03
PART OUTLINE
ANALOG
E10P
M1311
V03
1/2
YORKVILLE E10P M1311 V3.00
2 OZ. COPPER
= GROUND MERGE
DON'T PUT ANYTHING ON TOP LAYER HERE
DON'T PUT ANYTHING ON TOP LAYER HERE
YORKVILLE E10P M1311 V3.00
2/2
E10P
M1311
V03
CLINCH ORIGIN
INSERT ORIGIN
Top Assy M1311V03
Pcb Mech M1311V03

M1312 E10P Shield

BlankSize=11300x6520

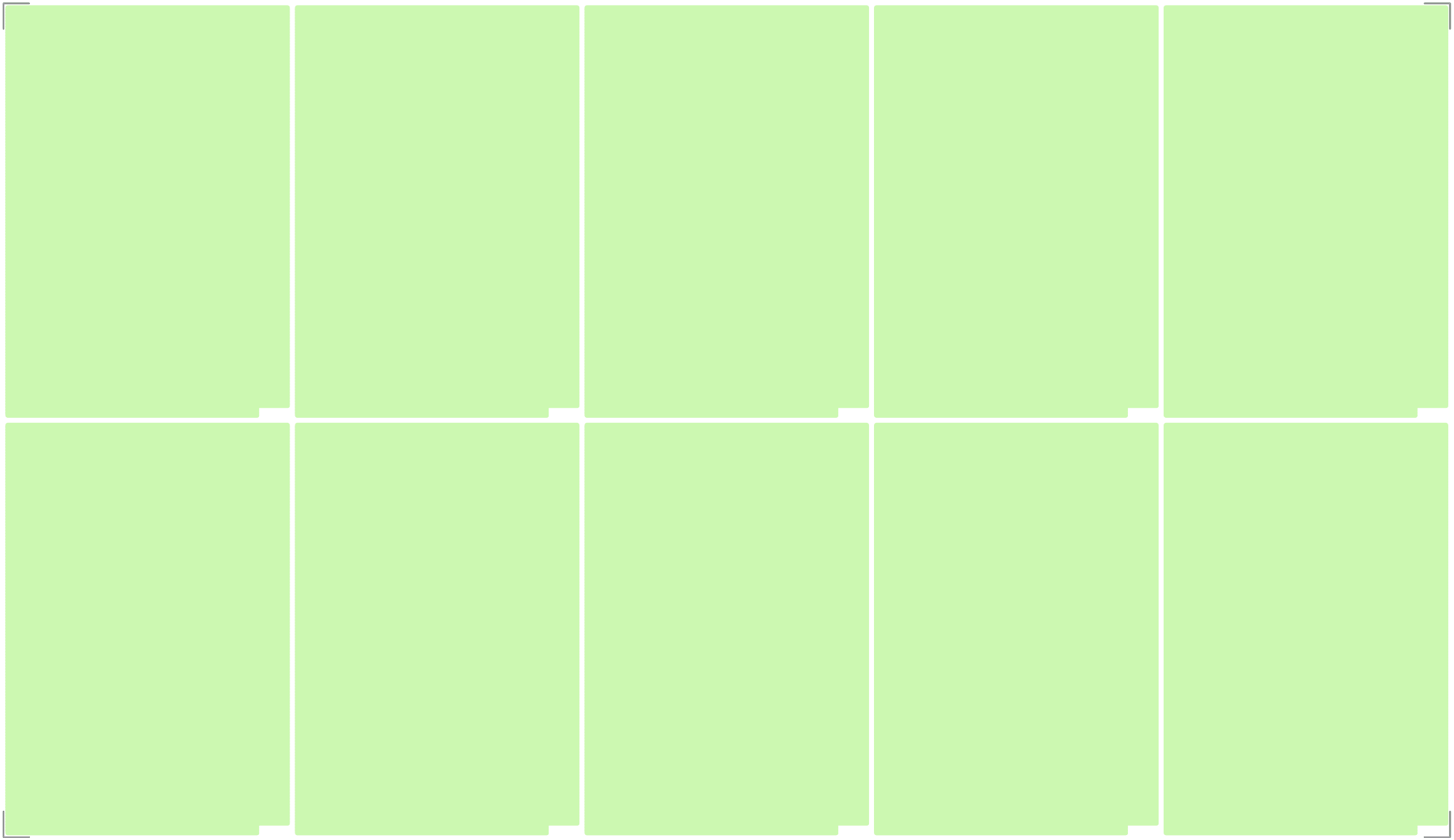

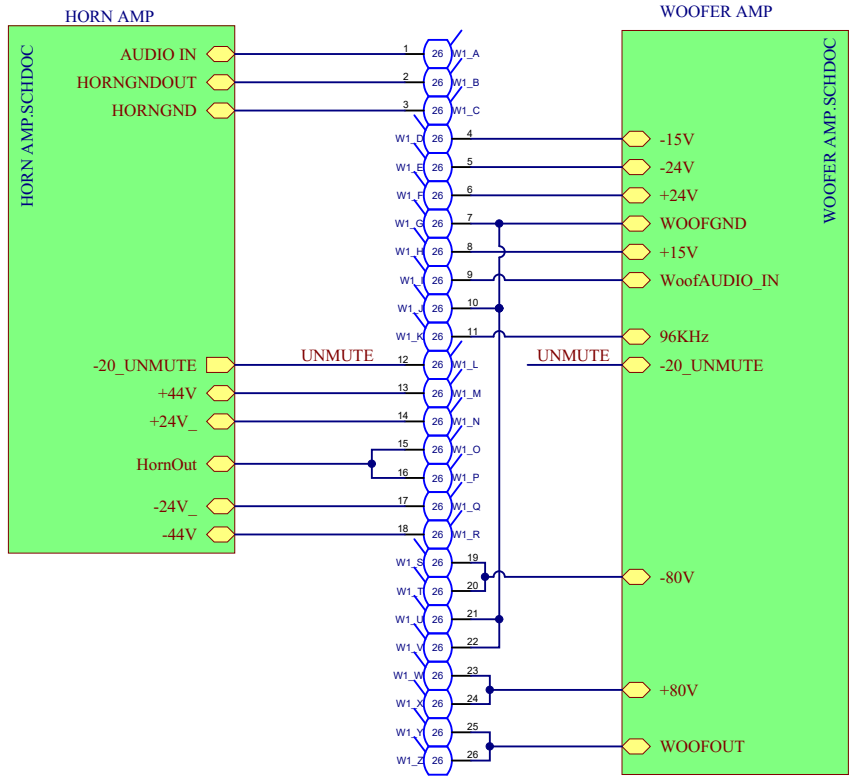

ECO
ECO.SCHDOC

Yorkville
Website

Product(s): E10P-PSA1				
Description: Powered speaker cabinet				
PCB#: M1495	Rev#: V06	EML Rev#: 01	Sheet 1 Of 4	
Modified: 3/22/2016	File: Top Sheet.SchDoc		Tmp Rev: V032	

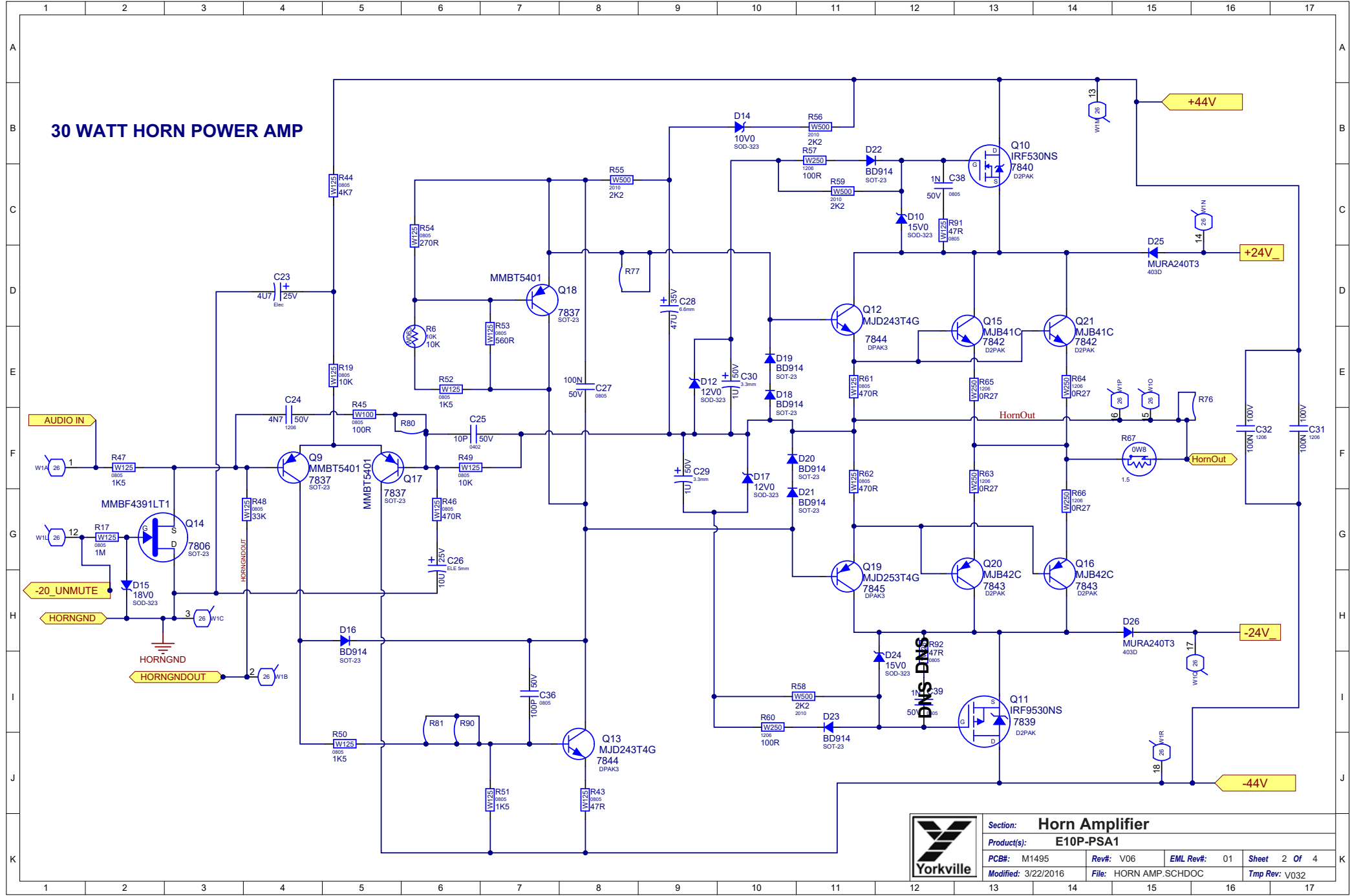
30 WATT HORN POWER AMP
+44V
+24V_
-24V_
-44V
AUDIO IN
-20_UNMUTE
HORNGND
HORNGNDOUT
HornOut
MMBF4391LT1
Q14
7806
SOT-23
Q9
MMBT5401
7837
SOT-23
Q17
7837
SOT-23
MMBT5401
Q18
7837
SOT-23
Q13
MJD243T4G
7844
DPAK3
Q12
MJD243T4G
7844
DPAK3
Q15
MJB41C
7842
D2PAK
Q21
MJB41C
7842
D2PAK
Q19
MJD253T4G
7845
DPAK3
Q20
MJB42C
7843
D2PAK
Q16
MJB42C
7843
D2PAK
Q10
IRF530NS
7840
D2PAK
Q11
IRF9530NS
7839
D2PAK
D14
10V0
SOD-323
D15
18V0
SOD-323
D16
BD914
SOT-23
D17
12V0
SOD-323
D18
BD914
SOT-23
D19
BD914
SOT-23
D20
BD914
SOT-23
D21
BD914
SOT-23
D22
BD914
SOT-23
D23
BD914
SOT-23
D24
15V0
SOD-323
D25
MURA240T3
403D
D26
MURA240T3
403D
D10
15V0
SOD-323
D12
12V0
SOD-323
R47
W125
0805
1K5
R17
W125
0805
1M
R48
W125
0805
33K
R49
W125
0805
10K
R46
W125
0805
470R
R45
W100
0805
100R
R44
W125
0805
4K7
R19
W125
0805
10K
R54
W125
0805
270R
R53
W125
0805
560R
R52
W125
0805
1K5
R6
W063
10K
R55
W500
2010
2K2
R56
W500
2010
2K2
R57
W250
1206
100R
R59
W500
2010
2K2
R58
W500
2010
2K2
R60
W250
1206
100R
R61
W125
0805
470R
R62
W125
0805
470R
R63
W250
1206
0R27
R64
W250
1206
0R27
R65
W250
1206
0R27
R66
W250
1206
0R27
R67
0W8
1.5
R76
R77
R80
R81
R90
R91
W125
0805
47R
R92
W125
0805
47R
R50
W125
0805
1K5
R51
W125
0805
1K5
R43
W125
0805
47R
C23
4U7
25V
Elec
C24
4N7
50V
1206
C25
10P
50V
0402
C26
10U
25V
ELE 5mm
C27
100N
50V
0805
C28
47U
35V
6.6mm
C29
1U
50V
3.3mm
C30
1U
50V
3.3mm
C31
100N
100V
1206
C32
100N
100V
1206
C36
100P
50V
0805
C38
1N
50V
0805
C39
1N
50V
0805
DNS
DNS
Yorkville
Section: Horn Amplifier
Product(s): E10P-PSA1
PCB#: M1495
Rev#: V06
EML Rev#: 01
Sheet 2 Of 4
Modified: 3/22/2016
File: HORN AMP.SCHDOC
Tmp Rev: V032

WOOFER

325W NON INVERTING CLASS D AMPLIFIER

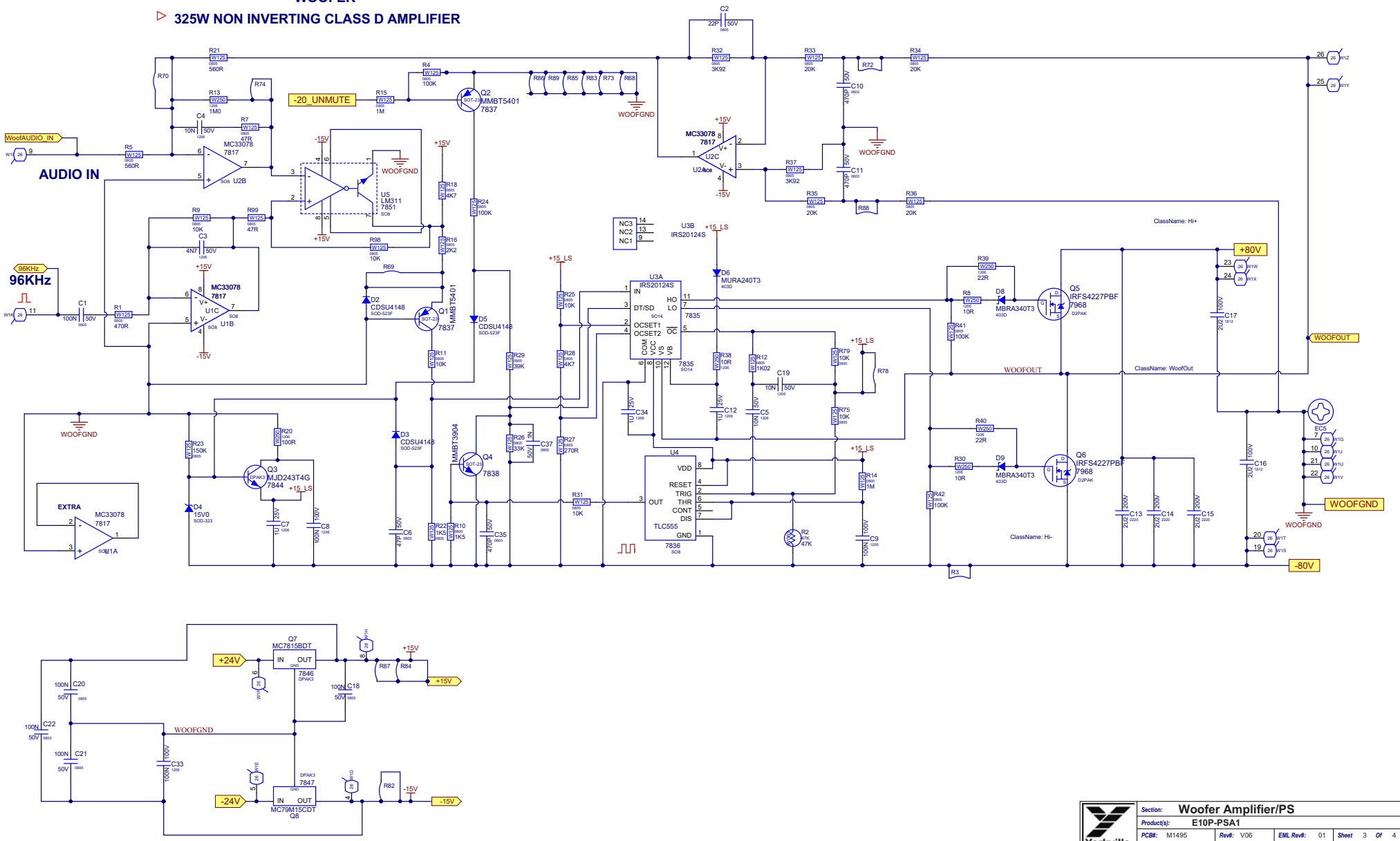

Section:	Woofer Amplifier/PS
Product(s):	E10P-PSA1
PCB#: M1495	Rev#: V06
EML Rev#: 01	Sheet 3 Of 4
Modified: 3/22/2016	File: WOOFER AMP.SCHDOC
	Tmp Rev: V032

Yorkville

DESIGN HISTORY AND INFORMATION

CHANGE HISTORY

#	DATE	VER#	PC#	DESCRIPTION OF CHANGE
1	2015-06-24	V05	8782	Translate V04 PCAD to AD. PC#8782 added C38,39. Moved D10,14,R58.
2	.	.	.	Moved D4 up 6mil. Changed all D0704 footprints to SOD-523F.
3	2015-08-27	V06	8817	Add 47R 0805 #7854 in series with C38 and C39 GG
4	.	.	.	Replace all #7613 with #5979 GG
5	.	.	.	Increase board width by 10mil each side GG
6	22-MAR-2016	.	8818	#7613 100n 25V replaced with #5979 100n 50V
7	.	.	.	.
8	.	.	.	.
9	.	.	.	.
10	.	.	.	.
11	.	.	.	.
12	.	.	.	.
13	.	.	.	.

#	DATE	VER#	PC#	DESCRIPTION OF CHANGE
1	.	.	.	.
2	.	.	.	.
3	.	.	.	.
4	.	.	.	.
5	.	.	.	.
6	.	.	.	.
7	.	.	.	.
8	.	.	.	.
9	.	.	.	.
10	.	.	.	.
11	.	.	.	.
12	.	.	.	.
13	.	.	.	.

#	DATE	VER#	PC#	DESCRIPTION OF CHANGE
1	.	.	.	.
2	.	.	.	.
3	.	.	.	.
4	.	.	.	.
5	.	.	.	.
6	.	.	.	.
7	.	.	.	.
8	.	.	.	.
9	.	.	.	.
10	.	.	.	.
11	.	.	.	.
12	.	.	.	.
13	.	.	.	.

POTENTIOMETERS AND KNOBS

PINOUT DIAGRAMS

Yorkville

Section: Design Information And History
Product(s): E10P-PSA1
PCB#: M1495 | Rev#: V06 | EML Rev#: 01 | Sheet 4 Of 4
Modified: 3/22/2016 | File: History.SchDoc | Tmp Rev: V032

HAND PLACE W1 BEFORE REFLOW OVEN

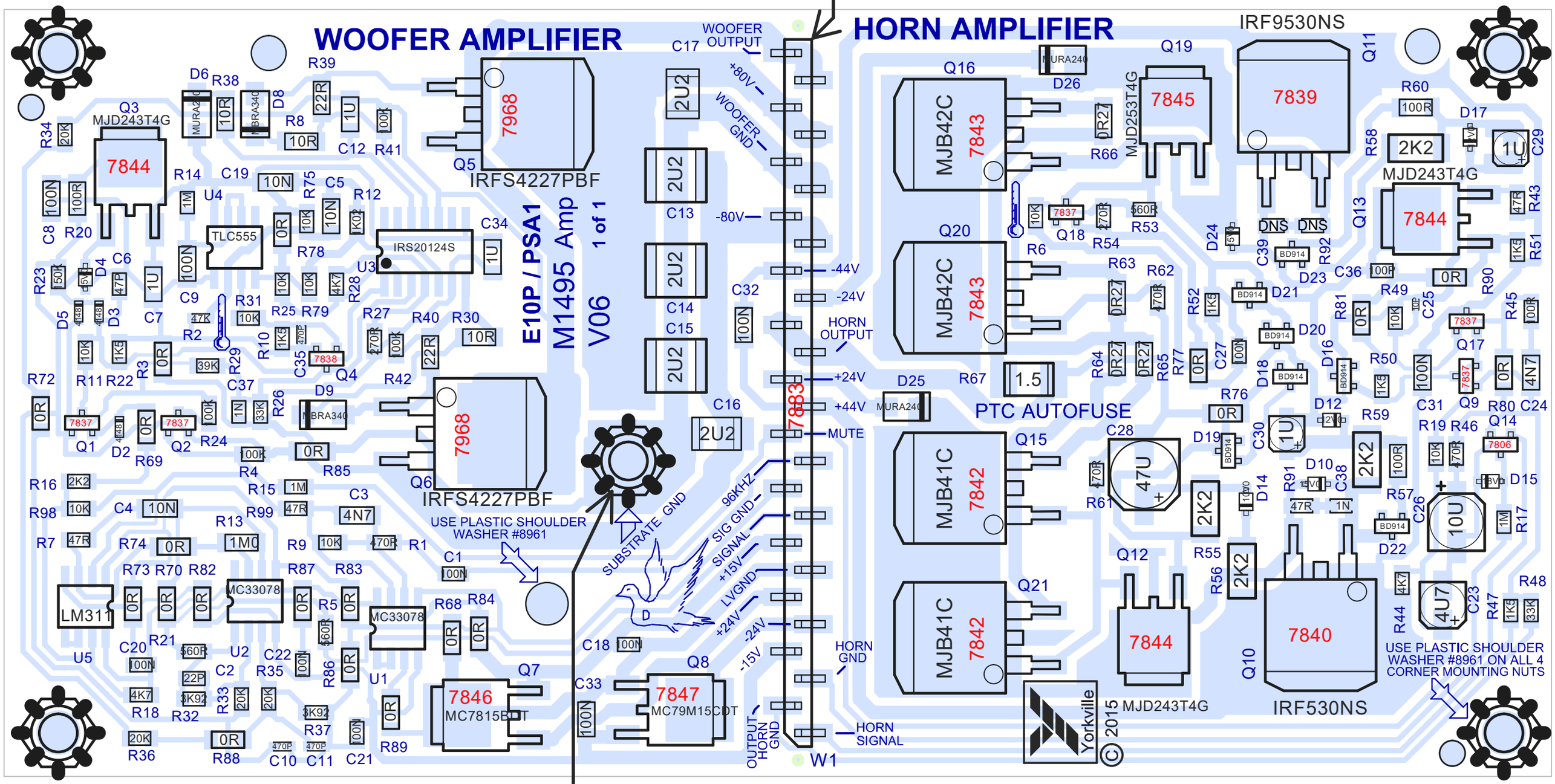

M1495 V06

8701 + 8877 SEE NOTE 1.

E10P / PSA1

PANEL INFO

BlankSize - 6250x11750
# of boards per panel: 4
Step & Repeat: X4@2.820Y1@0.0

PCB ASSEMBLY DOCUMENTATION

SPECIAL PRODUCTION NOTES

1. PLACE GROUNDING SCREW (#8877) AND NUT (#8701) IN SUBSTRATE GND HOLE AFTER REFLOW OVEN.

PCB HARDWARE

SCREWS AND BOLTS



8877



8701

THIS SHEET CONTAINS SPECIAL PRODUCTION NOTES AND A LIST OF PCB HARDWARE PARTS REQUIRED FOR THE BUILD.

Yorkville

Section: **Assembly Documentation**				
Product(s): **E10P / PSA1**				
PCB#: M1495	*Rev#:* V06	*EML Rev#:* 01	*Sheet* 1 *Of* *	
Modified: 8/28/2015	*File:* Assembly.SchDoc		*Tmp Rev:* V032	

DESIGN HISTORY AND INFORMATION

CHANGE HISTORY

#	DATE	VER#	PC#	DESCRIPTION OF CHANGE
1	2015-06-24	V05	8782	Translate V04 PCAD to AD. PC#8782 added C38,39. Moved D10,14,R58.
2	.	.	.	Moved D4 up 6mil. Changed all D0704 footprints to SOD-523F.
3	2015-08-27	V06	8817	Add 47R 0805 #7854 in series with C38 and C39 GG
4	.	.	.	Replace all #7613 with #5979 GG
5	.	.	.	Increase board width by 10mil each side GG
6	.	.	.	.
7	.	.	.	.
8	.	.	.	.
9	.	.	.	.
10	.	.	.	.
11	.	.	.	.
12	.	.	.	.
13	.	.	.	.

#	DATE	VER#	PC#	DESCRIPTION OF CHANGE
1	.	.	.	.
2	.	.	.	.
3	.	.	.	.
4	.	.	.	.
5	.	.	.	.
6	.	.	.	.
7	.	.	.	.
8	.	.	.	.
9	.	.	.	.
10	.	.	.	.
11	.	.	.	.
12	.	.	.	.
13	.	.	.	.

#	DATE	VER#	PC#	DESCRIPTION OF CHANGE
1	.	.	.	.
2	.	.	.	.
3	.	.	.	.
4	.	.	.	.
5	.	.	.	.
6	.	.	.	.
7	.	.	.	.
8	.	.	.	.
9	.	.	.	.
10	.	.	.	.
11	.	.	.	.
12	.	.	.	.
13	.	.	.	.

POTENTIOMETERS AND KNOBS

PINOUT DIAGRAMS

Yorkville

Section:	Design Information And History		
Product(s):	E10P / PSA1		
PCB#: M1495	Rev#: V06	EML Rev#: 01	Sheet 4 Of 4
Modified: 8/28/2015	File: History.SchDoc		Tmp Rev: V032

Yorkville Sound
550 Granite Court
Pickering, Ontario
Canada L1W 3Y8

Auto Attend: (905) 837-8550 Fax: (905) 837-8746

www.yorkville.com