MAIN PCB

SIDE B

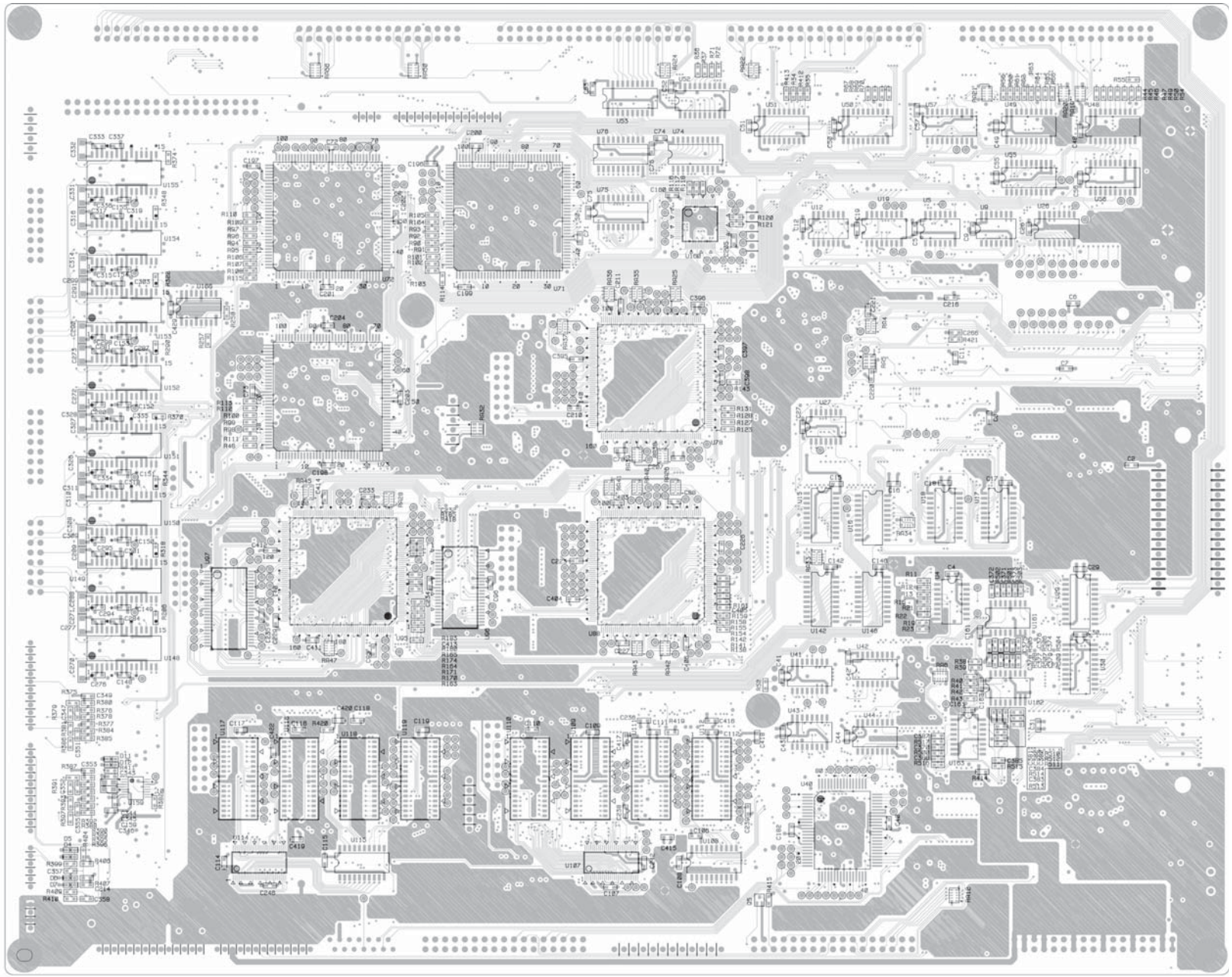

GATHER PCB, TRANSPORT (TRANSPORT PCB, LCD SUB PCB, MIDI PCB, TDIF PCB)

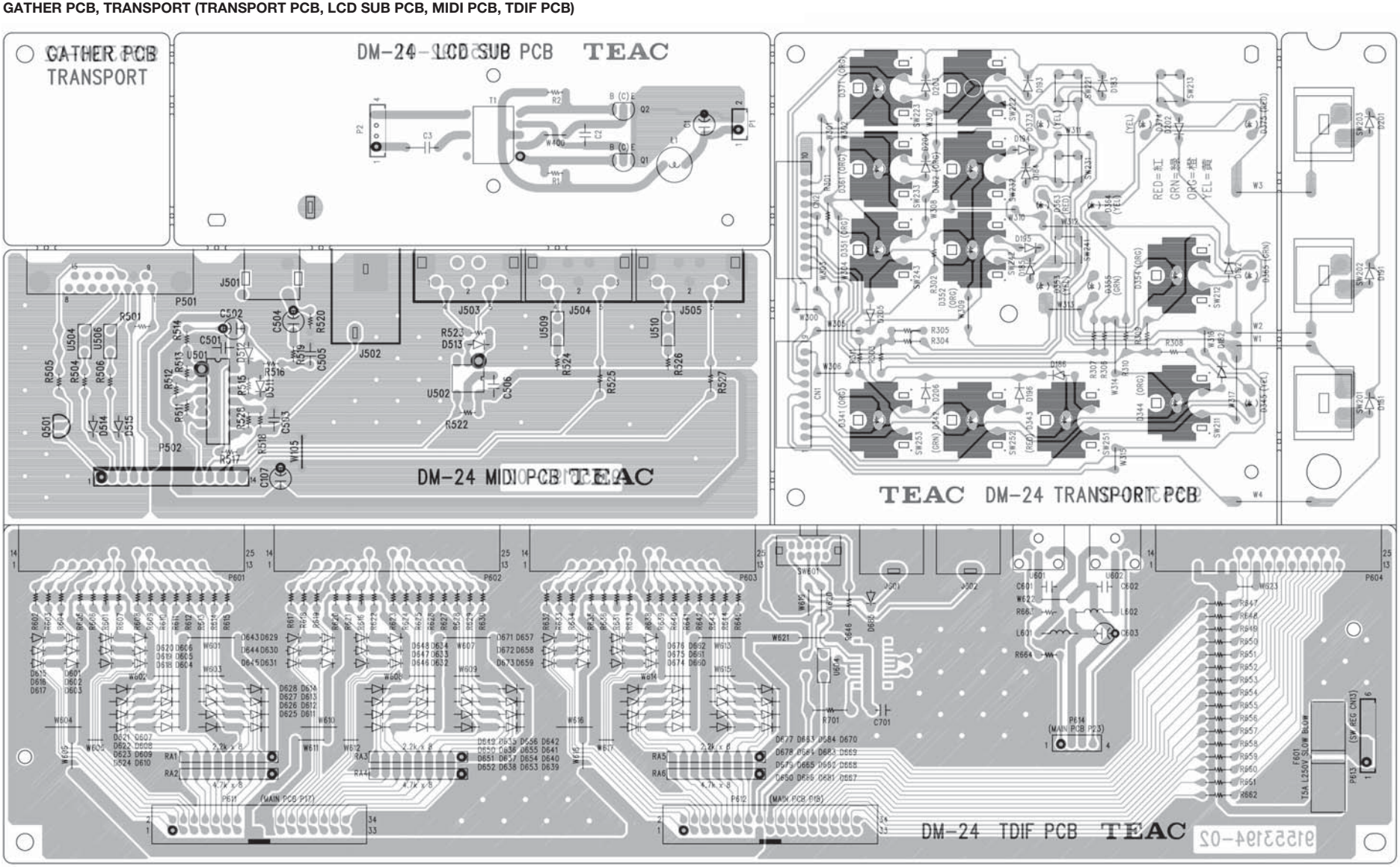

GATHER PCB, MASTER (STUDIO PCB, C.ROOM PCB, DIGITAL I/O PCB, MASTER JACK PCB, MASTER AMP PCB, BUSS PCB)

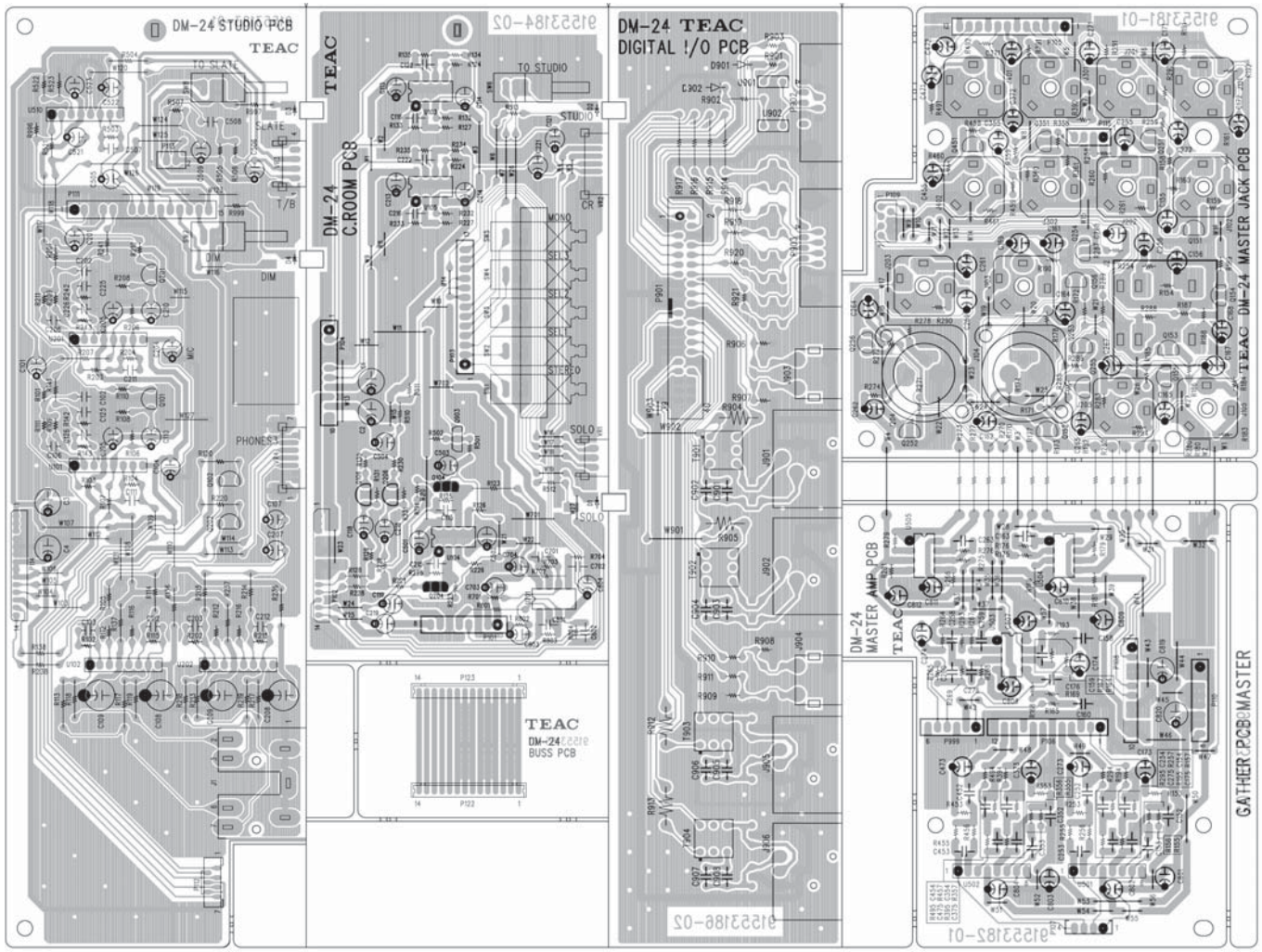

FADER PCB

SIDE A

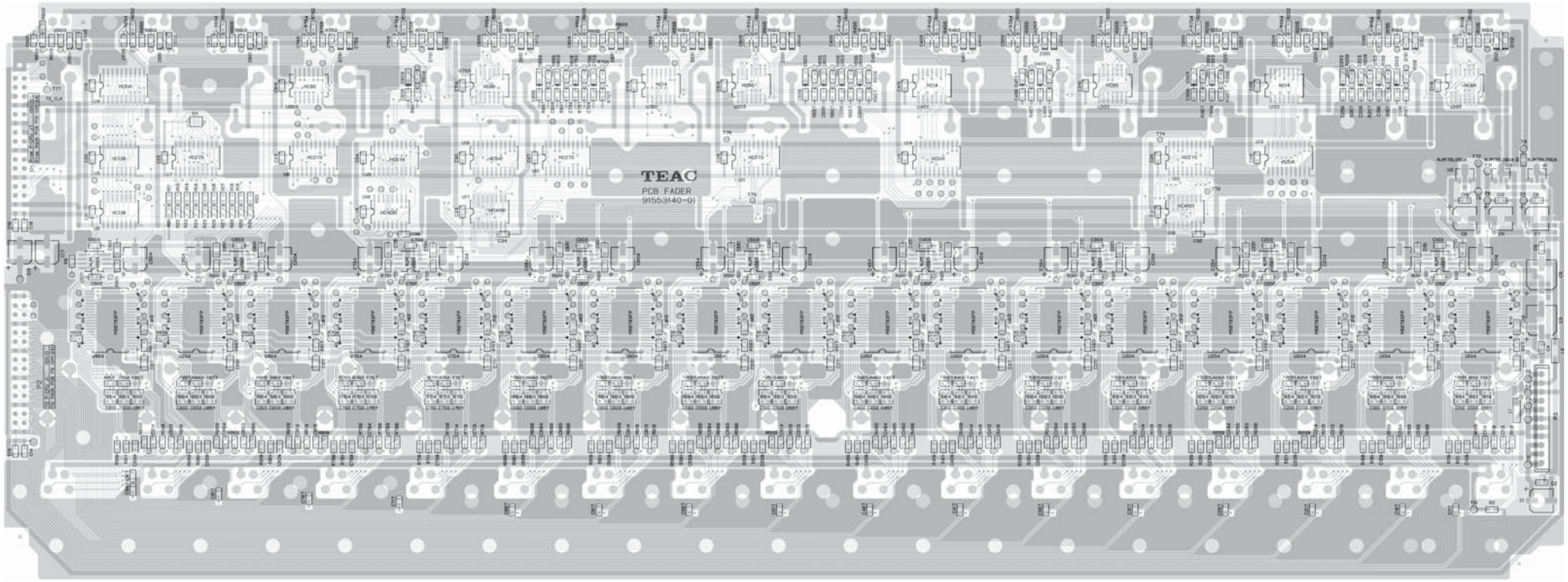

FADER PCB

SIDE B

