EXPLODED VIEW-2

REF.NO.	PARTS NO.	DESCRIPTION	REMARKS
2- 1	*9260384901	SHIELD SHEET,TDIF	
2- 2		DIGITAL I/O PCB ASSY ·····	GATHER PCB ASSY,MASTER (Refer to page 68)
2- 3	9260361500	PUSH RIVET,SR3-5.5	
2- 4	*9260364401	REAR PANEL	
2- 5	*9260359300	PANEL,SLOT	
2- 6	*9260364502	HEAT SINK	
2- 7	9260317800	SI-INSULATOR,T-220	
2- 8	*9260232900	SHEET,RADIATOR D	
2- 9		POWER SW PCB ASSY ·····	GATHER PCB ASSY,POWER (Refer to page 70)
2-10	5801486601	ESCUTCHEON D,P-N15-A	
2-11	5801503800	BUTTON,EJECT P-N15-A	
2-12	9260320701	BRACKET,PWRSW	
2-13		TDIF PCB ASSY ·····	GATHER PCB ASSY,TRANSPORT (Refer to page 69)
2-14	*9260383300	SHEET,SW REG	
2-15	9260364801	COVER,SW REG	
2-16	9125146300	SW-PWR,UPS220-1061-L [J,US/C]	
	9125146400	SW-PWR,UPS220-1061-H [K,A,E,UK]	
2-17	9260356700	CARD GUIDE,CG-600	
2-18	*9260364000	PCB SUPPORT,DCB-5	
2-19	*9260363901	BRACKET,SLOT	
2-20		MOTHER PCB ASSY ·····	GATHER PCB ASSY,MOTHER (Refer to page 70)
2-21	*9260364301	BRACKET,MOTHER PCB	
2-22	9260363701	FRAME,BOTTOM	
2-23	*9260384800	SHIELD COVER,TRANS	
2-24	⚠ 9125145202	POWER TRANSFORMER	
2-25	*9260364101	BRACKET,TRANS	
2-26	*9260364201	COVER,TRANS PCB	
2-27	9260364601	SIDE PANEL,L	
2-28	9151003000	BATTERY,CR2032	
2-29		MAIN PCB ASSY ·····	GATHER PCB ASSY,MAIN (Refer to page 65)
2-30	*9260363601	CHASSIS,BOTTOM	
2-31	9260364701	SIDE PANEL,R	
2-32	9260233100	FOOT,FF015	
2-33	*9260366800	PCB SUPPORT,RCC-12	
2-41	*9783103006	SCREW,CAP-S M3X6	
2-42	9780503006	SCREW,BH M3X6 (BLK)	
2-43	*9260330700	D-SUB SCREW,HW-H118MN02	
2-44	Vacant		
2-45	Vacant		
2-46	*9783613008	SCREW,BTT-P M3X8 (BLK)	
2-47	*9783242608	SCREW,BTT-B M2.6X8 (BLK)	
2-48	*9783243012	SCREW,BTT-B M3X12 (BLK)	
2-49	*9783243008	SCREW,BTT-B M3X8 (BLK)	
2-50	*9780503010	SCREW,BH M3X10 (BLK)	
2-51	*9780403006	SCREW,BH M3X6	
2-52	*9783294008	SCREW,BTT-SSB M4X8	
2-53	*9780404008	SCREW,BH M4X8	
2-54	*9780504008	SCREW,BH M4X8 (BLK)	

EXPLODED VIEW-2

REF.NO.	PARTS NO.	DESCRIPTION	REMARKS
2-61		MIDI PCB ASSY ·····	GATHER PCB ASSY,TRANSPORT (Refer to page 69)
2-62		TR4 PCB ASSY ·····	GATHER PCB ASSY,POWER (Refer to page 70)
2-63		TR3 PCB ASSY ·····	GATHER PCB ASSY,POWER (Refer to page 70)
2-64		BD PCB ASSY ·····	GATHER PCB ASSY,POWER (Refer to page 70)
2-65		TR2 PCB ASSY ·····	GATHER PCB ASSY,POWER (Refer to page 70)
2-66		TR1 PCB ASSY ·····	GATHER PCB ASSY,POWER (Refer to page 70)
2-67		TR5 PCB ASSY ·····	GATHER PCB ASSY,POWER (Refer to page 70)
2-68		POWER PCB ASSY ·····	GATHER PCB ASSY,POWER (Refer to page 70)
2-69		TRANS 2 PCB ASSY ·····	GATHER PCB ASSY,POWER (Refer to page 70)
2-70		TRANS 1 PCB ASSY ·····	GATHER PCB ASSY,POWER (Refer to page 70)

EXPLODED VIEW-3 (MU-24)

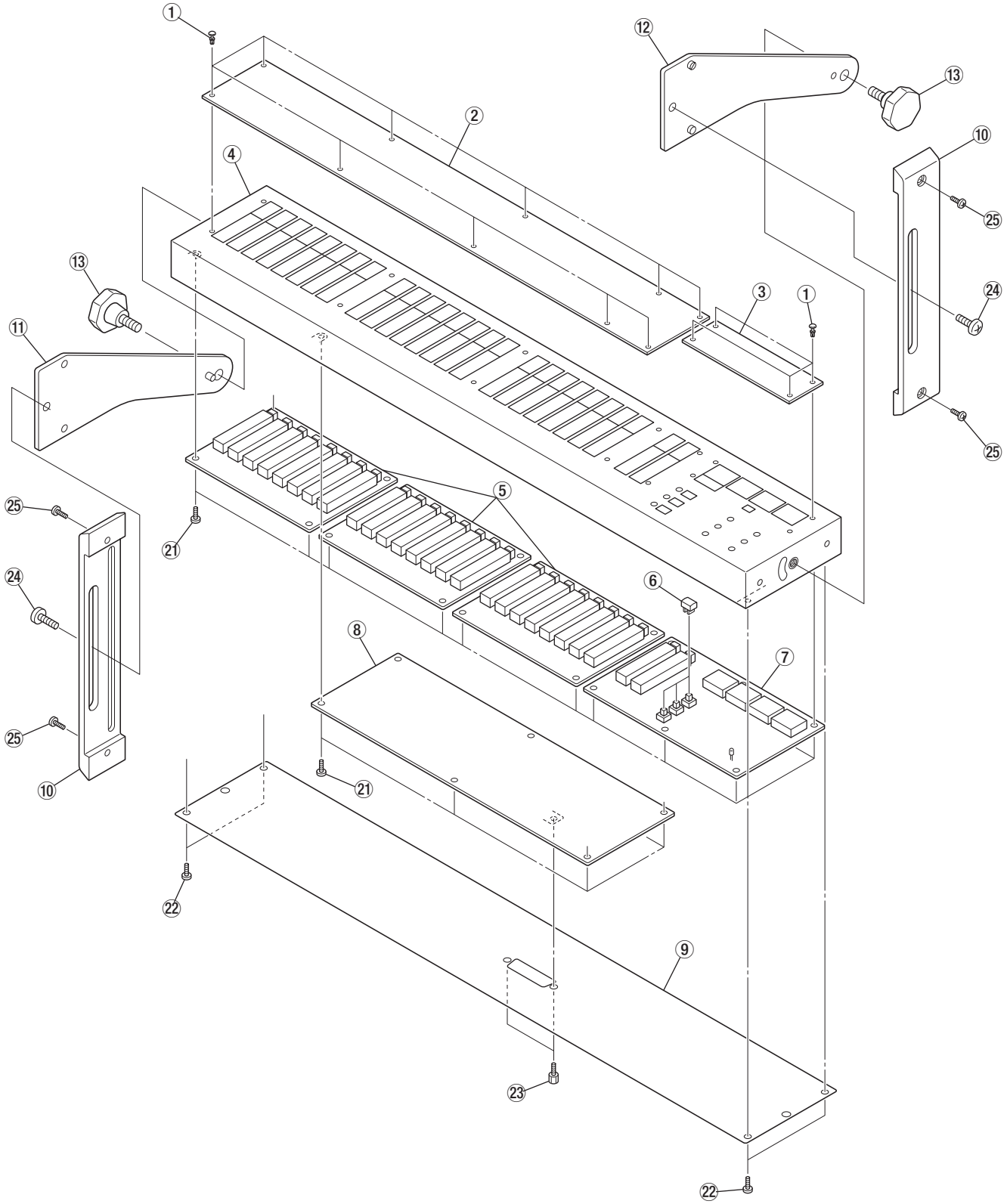

EXPLODED VIEW-3 (MU-24)

REF.NO.	PARTS NO.	DESCRIPTION	REMARKS
3- 1	9260388300	PUSH RIVETS,SR2.6-4.2	
3- 2	9260368800	WINDOW,L	
3- 3	9260368700	WINDOW,S	
3- 4	9260368100	PANEL ASSY,METER	
3- 5		PCB ASSY,INPUT METER ·····	GATHER PCB ASSY,METER BRIDGE (Refer to page 71)
3- 6	M00630701A	BUTTON,6.4X8.4 N63	
3- 7		PCB ASSY,MASTER METER ·····	GATHER PCB ASSY,METER BRIDGE (Refer to page 71)
3- 8		PCB ASSY,METER DRIVER ·····	GATHER PCB ASSY,METER DRIVER (Refer to page 71)
3- 9	*9260368900	REAR PANEL,METER	
3-10	*9260369000	BASE,METER	
3-11	*9260369100	ANGLE,SIDE L	
3-12	*9260369200	ANGLE,SIDE R	
3-13	9260388401	HAND SCREW,40-M8-L=16(NI)	
3-21	*9780403006	SCREW,BH M3X6	
3-22	*9780503006	SCREW,BH M3X6(BLK)	
3-23	9260330800	D-SUB SCREW,HW-H118EN00	
3-24	*9780208010	SCREW,PH M8X10 (BLK)	
3-25	*9780503012	SCREW,BH M3X12 (BLK)	

INCLUDED ACCESSORIES (MU-24)

REF.NO.	PARTS NO.	DESCRIPTION	REMARKS
	9101440700	OWNER'S MANUAL,MU-24	
	9109032010	MU-24 METER CABLE	

9. PC BOARDS AND PARTS LIST

基板図とパーツリスト

GATHER PCB ASSY, MAIN

REF.NO.	PARTS NO.	DESCRIPTION
	*9145316000	GATHER PCB ASSY,MAIN
		MAIN PCB
BT1	9260303900	BATTERY HOLDER,SN-2032-1
BT1	9151003000	BATTERY,CR2032
D1,2	9165025030	DIODE,BR751V-40/TE17
D4-7	9165023530	DIODE,1SS355 TE17
D8	9165028930	DIODE,HVC376B
D9-12	9165023530	DIODE,1SS355 TE17
D13-16	9174027431	LED,KPK-3020NC(ORG)12MAV
L1	5286051500	COIL,CHIP 2.7UH LK2125
L2-5	9173020830	COIL,MLF2012E100MT
P1	9144521900	CONNECTOR,14FE-BT-VK-N
P2	9143180000	CONNECTOR PLUG,12P
P3	9144513000	HEADER,2556P03UA00
P4	9143242000	PLUG,14P B14B-PH-K
P5	9143242000	PLUG,14P B14B-PH-K
P6	9143241000	PLUG,13P(B13B-PH-K)
P7	9144521000	CONNECTOR,3675P 34VUA0
P8	9143232000	PLUG,B4B-PH 4P
P9,10	9144521000	CONNECTOR,3675P 34VUA0
P11	9143174000	PLUG,6P B6B-EH-A
P17,18	9144521000	CONNECTOR,3675P 34VUA0
P20-22	9144510000	CONNECTOR,3675P 40VUA0
P23	9143232000	PLUG,B4B-PH 4P
P26,27	9144523700	CONNECTOR,3675P 16VUA0
P29,30	9143174000	PLUG,6P B6B-EH-A
P31	9143240000	CONNECTOR PLUG,B12B-PH-K
P32	9143240020	CONNECTOR,B12B-PH-K-R
P33	9143234000	PLUG,B6B-PH 6P
P34	9143174000	PLUG,6P B6B-EH-A
P35	9144510000	CONNECTOR,3675P 40VUA0
P36,37	9144523700	CONNECTOR,3675P 16VUA0
Q1	9163018030	TR,2SA1586Y
Q2,4	9163018530	DTR,DTA124EU
Q3,5	9163018630	DTR,DTC124EU
RA1-4	9111281030	R,ARRAY 10KX8 FCA350 CHIP
RA5,9	9111287030	R,ARRAY FCA340 103J
RA6-8	9111281030	R,ARRAY 10KX8 FCA350 CHIP
RA10-13	9111281030	R,ARRAY 10KX8 FCA350 CHIP
RA14,17	9111287030	R,ARRAY FCA340 103J
RA15,16	9111281030	R,ARRAY 10KX8 FCA350 CHIP
RA18,22	9111281030	R,ARRAY 10KX8 FCA350 CHIP
RA23,29	9111287030	R,ARRAY FCA340 103J
RA24-28	9111281030	R,ARRAY 10KX8 FCA350 CHIP
RA30,31	9111281030	R,ARRAY 10KX8 FCA350 CHIP
RA32,63	9111287030	R,ARRAY FCA340 103J
RA33,34	9111281030	R,ARRAY 10KX8 FCA350 CHIP
RA35-37	9111303030	R,ARRAY 47KX8 YC-15J CHIP
RA38,39	9111281030	R,ARRAY 10KX8 FCA350 CHIP
RA40,41	9111303030	R,ARRAY 47KX8 YC-15J CHIP
RA42,43	9111281030	R,ARRAY 10KX8 FCA350 CHIP
RA44,45	9111303030	R,ARRAY 47KX8 YC-15J CHIP
RA46-49	9111281030	R,ARRAY 10KX8 FCA350 CHIP

GATHER PCB ASSY, MAIN

REF.NO.	PARTS NO.	DESCRIPTION
RA50-53	9111303030	R,ARRAY 47KX8 YC-15J CHIP
RA60,61	9111303030	R,ARRAY 47KX8 YC-15J CHIP
RA62	9111287030	R,ARRAY FCA340 103J
U1	S0044474	IC,HD74LV273AFPEL
U2	5220049400	IC,UPD65013
U3	9167039930	IC,M62006FP
U4	S0044614	IC,HD29051FP
U5	S0044584	IC,HD74LV04AFPEL
U6	9167080803	ROM ASSY,PANEL MBM29F800BA-70PF
U7	9167080903	ROM ASSY,PANEL MBM29F800BA-70PF
U6,7	E0033093	SOCKET,44PIN SOP IC179
U8	9167073230	IC,BS62LV256TC-70
U9	9167041730	IC,TC74VHC00F (14P)
U10	9167074630	IC,T2316162A-60S
U11	S0044444	IC,CPU HD6417014R
U12	S0044574	IC,HD74LV00AFPEL
U13,14	9167074730	IC,T14L256A-15P
U15,16	S0044554	IC,HD74LV244AFPEL
U17,18	S0044484	IC,HD74LV541AFPEL
U19-21	S0044524	IC,HD74LV139AFPEL
U22,25	S0044534	IC,HD74LV138AFPEL
U23,24	S0044474	IC,HD74LV273AFPEL
U26	S0044524	IC,HD74LV139AFPEL
U27	S0044564	IC,HD74LV125AFPEL
U28	S0039254	IC,IDT7130SA55J
U29	S0044554	IC,HD74LV244AFPEL
U30	S0044484	IC,HD74LV541AFPEL
U31	9167080703	ROM ASSY,MBM29F800BA-70PF
U31	E0033093	SOCKET,44PIN SOP IC179
U32	9167074630	IC,T2316162A-60S
U33	S0044444	IC,CPU HD6417014R
U34	S0044474	IC,HD74LV273AFPEL
U35	S0044524	IC,HD74LV139AFPEL
U36	9167066330	IC,HD74LV32AFPEL
U37	S0044554	IC,HD74LV244AFPEL
U38,39	9167066330	IC,HD74LV32AFPEL
U40	S0004183	IC,HD64646FS
U41-44	S0044604	IC,HD74LV157AFPEL(16P)
U45	S0044554	IC,HD74LV244AFPEL
U46	9167073230	IC,BS62LV256TC-70
U47	9167048730	IC,HD74LV02FPEL
U48-53	S0044484	IC,HD74LV541AFPEL
U54	S0044554	IC,HD74LV244AFPEL
U55-57	9167065130	IC,HD74LV240AFPEL
U58-61	5220121000	IC,HD74HC540FPEL(20P)
U62-67	S0044484	IC,HD74LV541AFPEL
U68	S0044524	IC,HD74LV139AFPEL
U69	S0044484	IC,HD74LV541AFPEL
U70	S0044474	IC,HD74LV273AFPEL
U71-73	S00190600A	IC,IOX
U74-76	S0044554	IC,HD74LV244AFPEL
U77,78	S0038953	IC,ADSP-21065L
U79	9167041630	IC,TC74VHCU04F (14P)

GATHER PCB ASSY, MAIN

REF.NO.	PARTS NO.	DESCRIPTION
U80	S0044504	IC,HD74LVC541AFPEL
U81	S0044574	IC,HD74LV00AFPEL
U82,83	S0044484	IC,HD74LV541AFPEL
U84,85	S0044554	IC,HD74LV244AFPEL
U86	S0044604	IC,HD74LV157AFPEL(16P)
U87,88	S0038953	IC,ADSP-21065L
U89,98	S0044574	IC,HD74LV00AFPEL
U90,91	S0044484	IC,HD74LV541AFPEL
U92,93	S0044554	IC,HD74LV244AFPEL
U94,95	S0038953	IC,ADSP-21065L
U96,97	9167074030	IC,T431616A-8S
U99,100	S0044484	IC,HD74LV541AFPEL
U101,102	S0044554	IC,HD74LV244AFPEL
U103	S0044564	IC,HD74LV125AFPEL
U104	S0044604	IC,HD74LV157AFPEL(16P)
U105	9167079730	IC,XC9572XL-10 TQ100
U106	S0038953	IC,ADSP-21065L
U107	S0044454	IC,HD74ALVCH16543
U108	S0044514	IC,HD74LV574AFPEL
U109-112	9167068630	IC,T14L102N-12J(32P)
U120	9167066730	IC,AL1402
U121	9167066630	IC,AL1401A
U122-124	S0044474	IC,HD74LV273AFPEL
U125	9167079630	IC,XC9536XL 100UQ 64-C
U126,127	S0044484	IC,HD74LV541AFPEL
U128	S0044494	IC,HD74LV540AFPEL
U129	S0044484	IC,HD74LV541AFPEL
U130,131	S0044604	IC,HD74LV157AFPEL(16P)
U132	9167081230	IC,HD74LV14AFPEL
U133	9167041630	IC,TC74VHCU04F (14P)
U134	13447922	IC,NJM78L05UA-TE1(3P)
U135	9167068030	IC,MC74HC4046ADR2(16P)
U136	9167070630	IC,TC74VHCT00AF
U137	S0044474	IC,HD74LV273AFPEL
U138	S0044614	IC,HD29051FP
U139	9167041630	IC,TC74VHCU04F (14P)
U140	9167048730	IC,HD74LV02FPEL
U141	S0044594	IC,HD74LV74AFPEL
U142	S0044554	IC,HD74LV244AFPEL
U143,144	S0042533	IC,CS8420
U145	S0044554	IC,HD74LV244AFPEL
U146	S0044554	IC,HD74LV244AFPEL
U147	S0044594	IC,HD74LV74AFPEL
U148-155	S0035224	IC,AK5383VS-E2
U156-158	S0044624	IC,AK4527VQ
U159	S0044634	IC,AK5353VT-E2
U160	9167079630	IC,XC9536XL 100UQ 64-C
U161-163	13443492	IC,HD74HC4052FPEL
U164	S0044434	IC,NJM79L24UA-TE1
U165	S0044584	IC,HD74LV04AFPEL
U166	9167041530	IC,TC74VHC153F (16P)
X1	9173016430	OSC,MIN95A-T 7.056MHZ
X2	9173019730	XTAL,LIM-C 30MHZ

GATHER PCB ASSY, INPUT

REF.NO.	PARTS NO.	DESCRIPTION
	*9145313000	GATHER PCB ASSY,INPUT
		PCB,INPUT JACK
		PCB,MIC AMP
D13,14	9165022150	DIODE,TP 1SS133T
D23,24	9165022150	DIODE,TP 1SS133T
D33,34	9165022150	DIODE,TP 1SS133T
D43,44	9165022150	DIODE,TP 1SS133T
D53,54	9165022150	DIODE,TP 1SS133T
D63,64	9165022150	DIODE,TP 1SS133T
D73,74	9165022150	DIODE,TP 1SS133T
D83,84	9165022150	DIODE,TP 1SS133T
D93,94	9165022150	DIODE,TP 1SS133T
D103,104	9165022150	DIODE,TP 1SS133T
D113,114	9165022150	DIODE,TP 1SS133T
D123,124	9165022150	DIODE,TP 1SS133T
D133,134	9165022150	DIODE,TP 1SS133T
D143,144	9165022150	DIODE,TP 1SS133T
D153,154	9165022150	DIODE,TP 1SS133T
D163,164	9165022150	DIODE,TP 1SS133T
J1-15	9144277001	MIC JACK,NC3FAV-0
J16	9144526900	MIC JACK,NC3FAV1-0-Y
J101-116	9144271001	PHONE JACK,JY-6353-02-030
J201-216	9144272001	PHONE JACK,JY-6353-02-040
P1-8	9144523800	CABLE BOTTON,51048-1510
P11-18	9144523800	CABLE BOTTON,51048-1510
P101-104	9144523700	CONNECTOR,3675P 16VUA0
P901,903	9143181000	PLUG,13P B13B-EH-A
P905	9143170000	CONNECTOR PLUG,2P
P906,907	9107148600	2P POWER WIRES
Q11,12	9163021320	TR,2SA1048GR
Q13,14	S0039452	TR,2SA1084E
Q15,16	S0028932	TR,2SC5395-T12-F
Q21,22	9163021320	TR,2SA1048GR
Q23,24	S0039452	TR,2SA1084E
Q25,26	S0028932	TR,2SC5395-T12-F
Q31,32	9163021320	TR,2SA1048GR
Q33,34	S0039452	TR,2SA1084E
Q35,36	S0028932	TR,2SC5395-T12-F
Q41,42	9163021320	TR,2SA1048GR
Q43,44	S0039452	TR,2SA1084E
Q45,46	S0028932	TR,2SC5395-T12-F
Q51,52	9163021320	TR,2SA1048GR
Q53,54	S0039452	TR,2SA1084E
Q55,56	S0028932	TR,2SC5395-T12-F
Q61,62	9163021320	TR,2SA1048GR
Q63,64	S0039452	TR,2SA1084E
Q65,66	S0028932	TR,2SC5395-T12-F
Q71,72	9163021320	TR,2SA1048GR
Q73,74	S0039452	TR,2SA1084E
Q75,76	S0028932	TR,2SC5395-T12-F
Q81,82	9163021320	TR,2SA1048GR
Q83,84	S0039452	TR,2SA1084E
Q85,86	S0028932	TR,2SC5395-T12-F

GATHER PCB ASSY, INPUT

REF.NO.		PARTS NO.	DESCRIPTION
Q91,92		9163021320	TR,2SA1048GR
Q93,94		S0039452	TR,2SA1084E
Q95,96		S0028932	TR,2SC5395-T12-F
Q101,102		9163021320	TR,2SA1048GR
Q103,104		S0039452	TR,2SA1084E
Q105,106		S0028932	TR,2SC5395-T12-F
Q111,112		9163021320	TR,2SA1048GR
Q113,114		S0039452	TR,2SA1084E
Q115,116		S0028932	TR,2SC5395-T12-F
Q121,122		9163021320	TR,2SA1048GR
Q123,124		S0039452	TR,2SA1084E
Q125,126		S0028932	TR,2SC5395-T12-F
Q131,132		9163021320	TR,2SA1048GR
Q133,134		S0039452	TR,2SA1084E
Q135,136		S0028932	TR,2SC5395-T12-F
Q141,142		9163021320	TR,2SA1048GR
Q143,144		S0039452	TR,2SA1084E
Q145,146		S0028932	TR,2SC5395-T12-F
Q151,152		9163021320	TR,2SA1048GR
Q153,154		S0039452	TR,2SA1084E
Q155,156		S0028932	TR,2SC5395-T12-F
Q161,162		9163021320	TR,2SA1048GR
Q163,164		S0039452	TR,2SA1084E
Q165,166		S0028932	TR,2SC5395-T12-F
R21,71	⚠	9114526700	R,NONFLAMMABLE 1/4W 270
R121,171	⚠	9114526700	R,NONFLAMMABLE 1/4W 270
R221,271	⚠	9114526700	R,NONFLAMMABLE 1/4W 270
R321,371	⚠	9114526700	R,NONFLAMMABLE 1/4W 270
R421,471	⚠	9114526700	R,NONFLAMMABLE 1/4W 270
R521,571	⚠	9114526700	R,NONFLAMMABLE 1/4W 270
R621,671	⚠	9114526700	R,NONFLAMMABLE 1/4W 270
R721,771	⚠	9114526700	R,NONFLAMMABLE 1/4W 270
S1-4		9135036300	SLIDE SW,SSSU042NA2-TK
U1-32		9167025200	IC,BA15532N
VR1-16		9172038900	VR,20KZD EVUF2LFL3 24D

GATHER PCB ASSY, FADER

REF.NO.	PARTS NO.	DESCRIPTION
	*9145314000	GATHER PCBA,FADER
		PCB,FADER
D101-103	9165023530	DIODE,1SS355 TE17
D151-153	9165023530	DIODE,1SS355 TE17
D201-203	9165023530	DIODE,1SS355 TE17
D251-253	9165023530	DIODE,1SS355 TE17
D301-303	9165023530	DIODE,1SS355 TE17
D351-353	9165023530	DIODE,1SS355 TE17
D401-403	9165023530	DIODE,1SS355 TE17
D451-453	9165023530	DIODE,1SS355 TE17
D501-503	9165023530	DIODE,1SS355 TE17
D551-553	9165023530	DIODE,1SS355 TE17

GATHER PCB ASSY, FADER

REF.NO.	PARTS NO.	DESCRIPTION
D601-603	9165023530	DIODE,1SS355 TE17
D651-653	9165023530	DIODE,1SS355 TE17
D701-703	9165023530	DIODE,1SS355 TE17
D751-753	9165023530	DIODE,1SS355 TE17
D801-803	9165023530	DIODE,1SS355 TE17
D851-853	9165023530	DIODE,1SS355 TE17
D901-903	9165023530	DIODE,1SS355 TE17
L1,2	9173020730	COIL,BLM41P750SPT
MF101-901	R00979400A	VAR RES,5KB T-SENSE
MF151-851	R00979400A	VAR RES,5KB T-SENSE
P1	9144521000	CONNECTOR,3675P 34VUA0
P2	9144521000	CONNECTOR,3675P 34VUA0
P3	9143179000	CONNECTOR PLUG,B11B-EH-A
R3	9111297030	R,ARRAY 10KX8 YC-15J
R4	9111300030	RA,GUS-QS009-01-1002-G
U1	13447922	IC,NJM78L05UA-TE1(3P)
U2	S0028474	IC,NJM79L05UA-TE1
U3	13447982	IC,NJM78L06UA-TE1
U4	9167045830	IC,HD74HC541FPV
U5,6	13444452	IC,HD74HC138FP-TR
U7,8	S0044474	IC,HD74LV273AFPEL
U9	S0044514	IC,HD74LV574AFPEL
U10	S0044474	IC,HD74LV273AFPEL
U11,12	S0044474	IC,HD74LV273AFPEL
U13-15	9167045830	IC,HD74HC541FPV
U16-18	S0034834	IC,TC74HC4051AF
U101,201	S0023994	IC NJM4565M(8P)-TE1
U102,402	13444414	IC,HD74HC14FP-TR
U103,303	9167071230	IC,TC74HC86AF
U104,154	S0031454	IC,M56783FP
U204,254	S0031454	IC,M56783FP
U301,401	S0023994	IC NJM4565M(8P)-TE1
U304,354	S0031454	IC,M56783FP
U404,454	S0031454	IC,M56783FP
U501,601	S0023994	IC NJM4565M(8P)-TE1
U503,703	9167071230	IC,TC74HC86AF
U504,554	S0031454	IC,M56783FP
U604,654	S0031454	IC,M56783FP
U701,801	S0023994	IC NJM4565M(8P)-TE1
U702	13444414	IC,HD74HC14FP-TR
U704,754	S0031454	IC,M56783FP
U804,854	S0031454	IC,M56783FP
U901	S0023994	IC NJM4565M(8P)-TE1
U903	9167071230	IC,TC74HC86AF
U904	S0031454	IC,M56783FP

GATHER PCB ASSY, PANEL

REF.NO.	PARTS NO.	DESCRIPTION
	*9145315000	GATHER PCBA,PANEL
		PANEL PCB
	9260363300	ESCUTCHEON RING
CN1	9107142100	FLAT CABLE ASSY A
CN3	9107140600	CABLE ASSY H
CN4	9107140700	CABLE ASSY I
CN5	9107140800	CABLE ASSY J
D1-11	9174028520	LED,LA12540/TBF-4(ORG)
D12,28	9174028620	LED,LI12540/TBF-4(RED)
D13-27	9174028520	LED,LA12540/TBF-4(ORG)
D29	9174028520	LED,LA12540/TBF-4(ORG)
D30,31	9174027620	LED,SLR-332DU T32(ORG)
D32	9174027520	LED,SLR-332VR T32(RED)
D33 -36	9174027620	LED,SLR-332DU T32(ORG)
D37	9174027720	LED,SLR-332MG T32(GRN)
D38-40	9174027620	LED,SLR-332DU T32(ORG)
D41-48	9174028720	LED,LA12540/TBF-2(ORG)
D101-108	9165022150	DIODE,TP 1SS133T
D111-118	9165022150	DIODE,TP 1SS133T
D121-128	9165022150	DIODE,TP 1SS133T
D131-138	9165022150	DIODE,TP 1SS133T
D141-148	9165022150	DIODE,TP 1SS133T
D151-158	9165022150	DIODE,TP 1SS133T
D161-168	9165022150	DIODE,TP 1SS133T
D171-172	9165022150	DIODE,TP 1SS133T
D175-178	9165022150	DIODE,TP 1SS133T
D221-229	9174028820	LED,LI12540/TBF-2(RED)
231-238	9174028820	LED,LI12540/TBF-2(RED)
D241-248	9174027620	LED,SLR-332DU T32(ORG)
D249	9174027720	LED,SLR-332MG T32(GRN)
D251-258	9174027620	LED,SLR-332DU T32(ORG)
D261-269	9174027720	LED,SLR-332MG T32(GRN)
D271-278	9174027720	LED,SLR-332MG T32(GRN)
D281-289	9174027520	LED,SLR-332VR T32(RED)
D291-298	9174027520	LED,SLR-332VR T32(RED)
D301-308	9174027620	LED,SLR-332DU T32(ORG)
D311-318	9174027620	LED,SLR-332DU T32(ORG)
D321-328	9174027620	LED,SLR-332DU T32(ORG)
D331-338	9174027620	LED,SLR-332DU T32(ORG)
D346-348	9174027620	LED,SLR-332DU T32(ORG)
D356-358	9174027620	LED,SLR-332DU T32(ORG)
D366-368	9174027620	LED,SLR-332DU T32(ORG)
D376-378	9174027620	LED,SLR-332DU T32(ORG)
Q101-116	9163018420	DTR,DTC123ES
Q117-125	9163019020	TR,2SB1237R
SW1-16	9136003020	TACT SW,EVQ11L H=5 TP
SW17-33	9136002000	TACT SW SKHHDA
SW34	9136003020	TACT SW,EVQ11L H=5 TP
SW35-42	9172039800	ENCODER,EC12E24204F25
SW43	9172040200	ENCODER,EC12E2420802
SW101-108	9136003020	TACT SW,EVQ11L H=5 TP
SW111-118	9136003020	TACT SW,EVQ11L H=5 TP

GATHER PCB ASSY, PANEL

REF.NO.	PARTS NO.	DESCRIPTION
SW121-128	9136003020	TACT SW,EVQ11L H=5 TP
SW131-138	9136003020	TACT SW,EVQ11L H=5 TP
SW141-148	9136003020	TACT SW,EVQ11L H=5 TP
SW151-158	9136003020	TACT SW,EVQ11L H=5 TP
SW161-166	9136002000	TACT SW,SKHHDA
SW167	9136003020	TACT SW,EVQ11L H=5 TP
SW168	9136002000	TACT SW,SKHHDA
SW171-172	9136003020	TACT SW,EVQ11L H=5 TP
SW175	9136002000	TACT SW,SKHHDA
SW176	9136002000	TACT SW,SKHHDA
SW177-178	9136003020	TACT SW,EVQ11L H=5 TP
U1,2	9167026400	IC,TC74HC138AP
U3	9167029400	IC,TC74HC00AP (14P)
U4-11	9167037200	IC TC74HC541AP(20P)
U12-19	9167067500	IC,HD74LS374P
U20	5220098700	IC,HD74HC574P
U21	9167026400	IC,TC74HC138AP
U22	9167067600	IC,HD74LS138P
VR1	9172036300	VR,RK09K113Z401-10KB

GATHER PCB ASSY, MASTER

REF.NO.	PARTS NO.	DESCRIPTION
	*9145318000	GATHER PCB ASSY,MASTER
		MASTER JACK PCB
		MASTER AMP PCB
		STUDIO PCB
		C.ROOM PCB
		BUSS PCB
		DIGITAL I/O PCB
	9107143900	CABLE ASSY V
	9260366900	WIRE CLAMP,WLD-50T
D1,4	9174020200	LED,L-34ID (RED)
D2	9174022700	LED,L-34AD
D3	9174022700	LED,L-34AD
D901,902	9165022150	DIODE,TP 1SS133T
J1	9143385010	CPJ-066-005
J2	9144269100	4P B402A-B R/W
J101,201	9144520200	PHONE JACK,JY-6353-02-250
J102,202	9144271001	PHONE JACK,JY-6353-02-030
J103,203	9144272001	PHONE JACK,JY-6353-02-040
J104,204	9144487000	MIC JACK,NC3MAV
J105,205	9144271001	PHONE JACK,JY-6353-02-030
J301,401	9144520200	PHONE JACK,JY-6353-02-250
J302,402	9144271001	PHONE JACK,JY-6353-02-030
J901,902	9144438000	MIC JACK,NC3FAH1-0 (XLR)
J903,904	9144522100	2RCA HSP-242 V2-23
J905,906	9144000200	MIC JACK,NC3MBH(XLR)
P101	9107140000	CABLE ASSY A
P102	9143999000	CONNECTOR,TUC-P14X-B1

GATHER PCB ASSY, MASTER

REF.NO.		PARTS NO.	DESCRIPTION
P103		9107140100	CABLE ASSY B
P104		9107140200	CABLE ASSY C
P105		9107140300	CABLE ASSY D
P106		9107140400	CABLE ASSY E
P107		9143172000	CONNECTOR PLUG,B4B-EH-A
P108		9143178000	CONNECTOR PLUG,10P
P109		9144523900	CONNECTOR,TWG-P7P-A1
P110		9107141100	CABLE ASSY M
P111		9107140900	CABLE ASSY K
P112		9144524000	CONNECTOR,TWG-P7X-A1
P113		9143170000	CONNECTOR PLUG, 2P
P114		9143999000	CONNECTOR,TUC-P14X-B1
P115		9107141200	CABLE ASSY N
P122,123		9144043000	CONNECTOR,TUC-P14P-B1
P901		9144510000	CONNECTOR,3675P 40VUA0
P902,903		9144484000	D-SUB,DE-09SLURL2
Q101,201		9163310620	TR,TP 2SC-2878A
Q102,202		9163310620	TR,TP 2SC-2878A
Q104,204		9164005420	FET,2SJ498D
Q106,206		9163310620	TR,TP 2SC-2878A
Q151,251		9163310620	TR,TP 2SC-2878A
Q152,252		9163310620	TR,TP 2SC-2878A
Q153,253		9163310620	TR,TP 2SC-2878A
Q154,254		9163310620	TR,TP 2SC-2878A
Q155,255		9163310620	TR,TP 2SC-2878A
Q156,256		9163310620	TR,TP 2SC-2878A
Q351,451		9163310620	TR,TP 2SC-2878A
Q903		9163310420	DTR,DTC 124ES TP
R136,137	⚠	9114409000	R,NON-F 1/4W 100 FH-15
R236,237	⚠	9114409000	R,NON-F 1/4W 100 FH-15
SW1-5		9135041100	PUSH SW,SPUJ50H803-TK
SW6		9135041000	PUSH SW,SPUJ19A602-TK
SW7,8		9135041000	PUSH SW,SPUJ19A602-TK
T901-904		9173021100	TRANS,PULSE 400UH
U1		9179000200	MIC CONDENSER,U-620-A
U101,201		9167025200	IC,BA15532N
U102,202		9167056000	IC,NJM4580L (8P)
U103-105		9167040700	IC,NE5532N
U501,502		9167025200	IC,BA15532N
U503-505		9167040700	IC,NE5532N
U510		9167056000	IC,NJM4580L (8P)
U901-910		9122020620	FILTER,EXCEMT103BT TP
U911-914		9173014020	FILTER,EXCEMT101BT (100PF)
U915-922		9173014020	FILTER,EXCEMT101BT (100PF)
VR1		9172039000	5K(B) EVUE2JFK3 B53
VR2		9172023100	1S2UVR,14 10K(A)X2
VR3		9172023200	1S1UVR,11 50K(W)
VR4		9172023100	1S2UVR,14 10K(A)X2

GATHER PCB ASSY, TRANSPORT

REF.NO.		PARTS NO.	DESCRIPTION
		*9145319020	GATHER PCB ASSY,TRANSPORT [J,US/C]
		*9145319050	GATHER PCB ASSY,TRANSPORT [K,A,E,UK]
			TRANSPORT PCB
			LCD SUB PCB
			MIDI PCB
			TDIF PCB
		9260363400	BRACKET TRANSPORT
CN1		9143198000	CONNECTOR,S9B-EH
CN2		9173199000	PLUG,10P S10B-EH-A
D181-186		9165022150	DIODE,TP 1SS133T
D191-196		9165022150	DIODE,TP 1SS133T
D201-206		9165022150	DIODE,TP 1SS133T
D341,344		9174027620	LED,SLR-332DU T32(ORG)
D342		9174027720	LED,SLR-332MG T32(GRN)
D343		9174027520	LED,SLR-332VR T32(RED)
D345,353		9174028720	LED,LA12540/TBF-2(ORG)
D351,352		9174027620	LED,SLR-332DU T32(ORG)
D354		9174027620	LED,SLR-332DU T32(ORG)
D355,365		9174028920	LED,LG12540/TBF-2(GRN)
D361,362		9174027620	LED,SLR-332DU T32(ORG)
D363,375		9174028820	LED,LI12540/TBF-2(RED)
D364		9174028720	LED,LA12540/TBF-2(ORG)
D371		9174027620	LED,SLR-332DU T32(ORG)
D373,374		9174028720	LED,LA12540/TBF-2(ORG)
D511-513		9165022150	DIODE,TP 1SS133T
D514,515		9165022150	DIODE,TP 1SS133T
D601-685		9165022150	DIODE,TP 1SS133T
F601	⚠	9150062400	FUSE,5A 250V 51S050H [J,US/C]
	⚠	9150062500	FUSE,5A 250V 50T050H [K,A,E,UK]
F601		9150062100	FUSE HOLDER,CQ-203B
J501		9144462000	PIN JACK,1P HSP-241V1B
J502		9144520300	PHONE JACK,069-2
J503-505		9144481000	DIN JACK,HDC-052A-13
J601,602		9144488000	BNC,COH2201-A
L1		9173019900	COIL,RCH875-151K
L601,602		9173019850	COIL,47UH-EC24-470KT5
P1		9143170000	CONNECTOR PLUG,2P
P2		9143172000	CONNECTOR PLUG,B4B-EH-A
P501		9144489000	D-SUB,DA-15PLURL2
P502		9107140500	CABLE ASSY G
P601-604		9144445001	D-SUB,205A-25FSTBBB3
P611,612		9144521000	CONNECTOR,3675P 34VUA0
P613		9143174000	PLUG,6P B6B-EH-A
P614		9107143200	FLAT CABLE ASSY L
Q1,2		9163461020	TR,2SC2236-0 TP
Q501		9163310420	DTR,DTC 124ES TP
RA1,3,5		9111304000	R,ARRAY 2.2K*8 P=2.54
RA2,4,6		9111305000	R,ARRAY 4.7K*8 P=2.54
SW201-203		9135041400	PUSH SW,SKBMFA000A-TK

GATHER PCB ASSY, TRANSPORT

REF.NO.		PARTS NO.	DESCRIPTION
SW211,212		9136003020	TACT SW,EVQ11L H=5 TP
SW213,221		9136002000	TACT SW,SKHHDA
SW222,223		9136003020	TACT SW,EVQ11L H=5 TP
SW231,241		9136002000	TACT SW,SKHHDA
SW232,233		9136003020	TACT SW,EVQ11L H=5 TP
SW242,243		9136003020	TACT SW,EVQ11L H=5 TP
SW251-253		9136003020	TACT SW,EVQ11L H=5 TP
SW601		9135041200	SLIDER SW,SSSF123NA1-TK
T1		9125145000	TRANS,EW-12H/TW
U501		9167026900	IC,TC4069UBP
U502		9167051100	PHOTO COUPLER,PC-900
U504,506		9122020620	FILTER,EXCEMT103BT TP
U509,510		9122020620	FILTER,EXCEMT103BT TP
U601		E0062040	GP1FA550RZ
U602		E0062920	GP1FA550TZ
U604		9173014020	FILTER,EXCEMT101BT (100PF)
U701		9167070630	IC,TC74VHCT00AF

GATHER PCB ASSY, MOTHER

REF.NO.		PARTS NO.	DESCRIPTION
		*9145317000	GATHER PCBA,MOTHER
			MOTHER PCB
J1,2		9144520400	CARD EDGE,4024S120F0B
J3-5		9144510000	CONNECTOR,3675P 40VUA0
P1		9143199000	PLUG,10P(S10B-EH-A)
P2		9143198000	CONNECTOR,S9B-EH
P3		9144332000	PULG,S4B-EH

GATHER PCB ASSY, POWER

REF.NO.		PARTS NO.	DESCRIPTION
		*9145342020	GATHER PCB ASSY,POWER
			[J,US/C]
		*9145342050	GATHER PCB ASSY,POWER
			[K,A,E,UK]
			PCB,POWER
			PCB,POWER SW
			PCB,TRANS 1
			PCB,TRANS 2
			PCB,TR1
			PCB,TR2
			PCB,TR3
			PCB,TR4
			PCB,TR5
			PCB,BD
CN1		9144491000	CONNECTOR,B2P3-VH
C1,2	⚠	9117304100	C,ELEC 4700U 35V
C3,4	⚠	9117200020	C,ELEC TP 100M 35V
C101-103	⚠	9120000101	SPARK KILLER,0.0047M 250V
D1	⚠	9165026900	BRIDGE DIODE,RS403L

GATHER PCB ASSY, POWER

REF.NO.		PARTS NO.	DESCRIPTION
D3		9165027000	BRIDGE DIODE,KBU6D
D4,5		9165020550	DIODE,LT 1N4003 TP 0.6MM
D6		9166055551	Z-DIODE,MTZJ39B
D7		9166054651	Z-DIODE,MTZ J 16 B
D8,9		9165022150	DIODE,TP 1SS133T
D10-13		9165020550	DIODE,LT 1N4003 TP 0.6MM
D14,15		9165020550	DIODE,LT 1N4003 TP 0.6MM
D16	⚠	9165027000	BRIDGE DIODE,KBU6D
EP1		9229088000	EARTH PLATE B (GND-8)
F1,2	⚠	9150036000	T-LAG FUSE,4A 250V T
			[J,US/C]
F1,2	⚠	9150047000	T-LAG FUSE,4A 250V T
			[K,A,E,UK]
F3	⚠	9150028000	T-LAG FUSE,1.6A 250V T
			[K,A,E,UK]
F3	⚠	9150037000	T-LAG FUSE,1.6A 250V T
			[J,US/C]
F4	⚠	9150036000	T-LAG FUSE,4A 250V T
			[J,US/C]
F4	⚠	9150047000	T-LAG FUSE,4A 250V T
			[K,A,E,UK]
F1-4		9150062100	FUSE HOLDER CQ-203B
L101	⚠	5292806300	FILTER,FKOB16MH13
P1		9143182000	PLUG,14P B14B-EH-A
P2		9143176000	PLUG,8P B8B-EH-A
P3		9143180000	CONNECTOR PLUG,12P
P4		9143174000	PLUG,6P B6B-EH-A
P5		9143178000	CONNECTOR PLUG,10P
P6		9143170000	CONNECTOR PLUG,2P
P7		9143180000	CONNECTOR PLUG,12P
P8		9143172000	CONNECTOR PLUG,B4B-EH-A
P9		9143180000	CONNECTOR PLUG,12P
P101	⚠	9144493000	AC INLET,M1908-B
P102,103		9144491000	CONNECTOR,B2P3-VH
Q1	⚠	9163202900	TR,2SB1274R
Q2	⚠	9163202900	TR,2SB1274R
Q3	⚠	9163610300	TR,2SD1913R
Q4	⚠	9163205000	TR,2SB1018A-O
Q5		9163019120	TR,2SD1858R
Q6		9163013320	DTR,DTA115ES
Q9	⚠	9163202900	TR,2SB1274R
R1,2	⚠	9114526700	R,NONFLAMMABLE 1/4W 270
SW101	⚠	9135037200	POWER SW,SFDLB11M7U TK
U101	⚠	5220425800	IC,M5230LA (8P)
U102,103	⚠	5220446100	IC,M5237L (3P)

GATHER PCB ASSY,METER BRIDGE (OPTION)

REF.NO.	PARTS NO.	DESCRIPTION
	9145336000	GATHER PCBA,METER BRIDGE PCB,INPUT METER PCB,MASTER METER
D101,102	9174028300	LED,L-1043SRD
D103,104	9174028201	LBD1013-20/A
D105-108	9174029400	LED,DA0411YWA(YELLOW)
D109-114	9174024820	LED,L-3XAD-TNB5/4.7-90
D115-117	9174028400	LED,L-1043YD
D118-120	9174024820	LED,L-3XAD-TNB5/4.7-90
D121-123	9165022150	DIODE,TP 1SS133T
D124,125	9174028201	LBD1013-20/A
D201-208	9174028201	LBD1013-20/A
D209-216	9174028300	LED,L-1043SRD
D217-224	9174028201	LBD1013-20/A
J101	9144519720	PLUG,B16B-PH-K (RED)
J102	9144519700	PLUG,B16B-PH-K
J103	9144356000	CONNECTOR,B13B-ZR
J201	9144330020	PLUG,SI6B-PH-K-S (RED)
J202	9144330000	PLUG,S16B-PH-K-S
SW101-103	9136002000	TACT SW,SKHHDA

GATHER PCB ASSY,METER DRIVER (OPTION)

REF.NO.	PARTS NO.	DESCRIPTION
	9145335000	GATHER PCBA,METER DRIVER PCB,METER DRIVER
J1	9144524500	D-SUB DB-25PIUCT2
J2,4	9144330020	PLUG SI6B-PH-K-S (RED)
J3,5	9144330000	PLUG,S16B-PH-K-S
J6,8	9144330020	PLUG SI6B-PH-K-S (RED)
J7,9	9144330000	PLUG,S16B-PH-K-S
J10	9144356000	CONNECTOR B13B-ZR
L1	9173017430	COIL,SLF12565T-470M2R4
Q1-96	9163461430	DTR,DTC123EKA
R33-36	9111297030	R,ARRAY 10K*8 YC-15J
U1	9167067730	IC,HD74LV245AFPEL
U2,7	9167065430	IC,HD74LV244AFPEL
U3,4	9167075230	IC,HD74LV138AFPEL
U5,8	9167075230	IC,HD74LV138AFPEL
U6	9167066430	IC,HD74LV374AFPEL
U9	9167075230	IC,HD74LV138AFPEL
U10	9167065430	IC,HD74LV244AFPEL
U11	9167075030	IC,HD74LV04AFPEL
U12-15	9167051630	IC,TD62M8600F(18P)
U16-27	9167066430	IC,HD74LV374AFPEL

IF-TD/DM (OPTION)

REF.NO.	PARTS NO.	DESCRIPTION
	*9260365700	PANEL,TD/DM CARD
	*9260366200	LEVER SLOT
	*9260330700	D-SUB SCREW,HW-H118MN02
	*9145329000	GATHER PCB ASSY,IF-TD/DM
		PCB,IF-TD/DM
D1	9165023530	DIODE,1SS355 TE17
D2-17	9165024730	DA,IMN10 T108 CHIP
P1	9144522200	HEADER6,2556P6UA00
P2	9144482000	D-SUB DB-25SLURL2
P3	9144489000	D-SUB DA-15PLURL2
Q1	9163459030	DTR,DTC363EK T146
R17,32	9111297030	R,ARRAY 10KX8 YC-15J
R50,62	9111297030	R,ARRAY 10KX8 YC-15J
R63	9111282030	R,ARRAY 2.2KX8 MNR35 CHIP
R88	9111283030	R,ARRAY 4.7KX8 MNR35 CHIP
U1-3	9167055830	IC,HD74LV541AFPEL
U5,6	9167055830	IC,HD74LV541AFPEL
U7	9167067730	IC,HD74LV245AFPEL
U8	9167045830	IC,HD74HC541FPV
U9	9167050730	IC,SN74HCT541NSR(20P)
U10	9167064330	IC,HD74LVC541AFPEL(20P)
U11,12	9173016230	EMI,EXC CET 471U
U13	9167040030	IC,M66230FP
U14	9173016230	EMI,EXC CET 471U
U15	9167050230	IC,M5M34051FP
X1	9173013930	CRYSTAL,SK3 16MHZ

IF-AE/DM (OPTION)

REF.NO.	PARTS NO.	DESCRIPTION
	*9260365900	PANEL,AE/DM CARD
	*9260366200	LEVER SLOT
	*9260330600	D-SUB WASHER,HW-C050MN00
	*9260330700	D-SUB SCREW,HW-H118MN02
	*9145331000	GATHER PCB ASSY,IF-AE/DM
		PCB,IF-AE/DM
D1	9165023530	DIODE 1SS355 TE17
D2,3	9165024730	DA,IMN10 T108 CHIP
D4,5	9165024730	DA,IMN10 T108 CHIP
D6,7	9165024730	DA,IMN10 T108 CHIP
D8,9	9165024730	DA,IMN10 T108 CHIP
D10,11	9165024730	DA,IMN10 T108 CHIP
D12,13	9165024730	DA,IMN10 T108 CHIP
J1	9144482000	D-SUB DB-25SLURL2
J2	9143174000	PLUG 6P B6B-EH-A
L1,2	9122022230	EMI FILTER,NFM51R00P506
L3,4	9122022230	EMI FILTER,NFM51R00P506
L5,6	9122022230	EMI FILTER,NFM51R00P506
L7,8	9122022230	EMI FILTER,NFM51R00P506
R39,43	9111297030	R,ARRAY 10K*8 YC-15J
R46	9111297030	R,ARRAY 10K*8 YC-15J
T1-8	E00595800A	TRANS,PULSE 400UH
U1,4	9167055830	IC,HD74LV541AFPEL
U2	S0043574	IC,CS8415A-CZ
U3	9167051030	IC,NJM78L05UA-TE1(3P)
U5,7	9167055830	IC,HD74LV541AFPEL
U6	S0042443	IC,XCS40XL-4PQ208C
U8,12	9167055830	IC,HD74LV541AFPEL
U9	9167074930	IC,HD74LV00AFPEL
U10	9167067730	IC,HD74LV245AFPEL
U11	9167075030	IC,HD74LV04AFPEL
U13,14	9167055830	IC,HD74LV541AFPEL
U15	9167076230	IC,DS26C31TM
U16	9167055830	IC,HD74LV541AFPEL
U17	9167076330	IC,DS26C32ATM

IF-AD/DM (OPTION)

REF.NO.	PARTS NO.	DESCRIPTION
	*9260365800	PANEL,AD/DM CARD
	*9260366200	LEVER SLOT
	*9260330600	D-SUB WASHER,HW-C050MN00
	*9260330800	D-SUB SCREW,HW-H118EN00
	*9145330000	GATHER PCBA,IF-AD/DM
		PCB,IF-AD/DM
D1	9165023530	DIODE,1SS355 TE17
J1	9167073700	GP1FA550TZ
J2	9144484000	D-SUB,DE-09SLURL2
J3	9167073600	GP1FA550RZ
L1,2	9122021230	COIL,47UH ELJPA470KF CHIP
L3,4	9122022230	EMI FILTER,NFM51R00P506
R1,2	9111297030	R,ARRAY 10K*8 YC-15J
R32,35	9111297030	R,ARRAY 10K*8 YC-15J
R36,37	9111297030	R,ARRAY 10K*8 YC-15J
R38	9111297030	R,ARRAY 10K*8 YC-15J
U1,2	9167076130	IC,TC74HCT244AFP
U3,6	9167055830	IC,HD74LV541AFPEL
U4	9167075130	IC,HD74LV74AFPEL
U5	9167075330	IC,HD74LV139AFPEL
U7,9	9167075030	IC,HD74LV04AFPEL
U8,14	9167055830	IC,HD74LV541AFPEL
U10,13	9167076130	IC,TC74HCT244AFP
U11,12	9167075230	IC,HD74LV138AFPEL
U15	9167055830	IC,HD74LV541AFPEL
U16	9167068830	IC,TC74HCT245AFP
U17	9167067730	IC,HD74LV245AFPEL
U18,21	9167051030	IC,NJM78L05UA-TE1(3P)
U19	9167066630	IC,AL1401A
U20	9167051430	IC,TC74VHCT04AF(14P)
U22	9167066730	IC,AL1402
U23,24	9167075030	IC,HD74LV04AFPEL
U25,28	9167075430	IC,HD74LV273AFPEL
U26	9167070530	IC,PC410
U27	9167040030	IC,M66230FP
X1	9173013930	CRYSTAL,SK3 16MHZ

IF-CS/DM (OPTION)

REF.NO.	PARTS NO.	DESCRIPTION
	*9260366100	PANEL,CS/DM CARD
	*9260366200	LEVER SLOT
	*9260330600	D-SUB WASHER,HW-C050MN00
	*9260330800	D-SUB SCREW,HW-H118EN00
	*9109031900	CABLE,CASCADE-DM
	*9145333000	GATHER PCB ASSY,IF-CS/DM
		PCB,IF-CS/DM
D1,2	9174027430	LED,KPK-3020NC(ORG)
J1	9144483000	D-SUB DB-37SLURL2
L1-14	9122022230	EMI FILTER,NFM51R00P506
R24-27	9111297030	R,ARRAY 10K*8 YC-15J
R48	9111297030	R,ARRAY 10K*8 YC-15J
U1,2	9167055830	IC,HD74LV541AFPEL
U3,9	9167055830	IC,HD74LV541AFPEL
U4	9167066330	IC,HD74LV32AFPEL
U5	9167075030	IC,HD74LV04AFPEL
U7	9167066230	IC,HD74LV125AFPEL
U8,10	9167075230	IC,HD74LV138AFPEL
U11,12	9167055830	IC,HD74LV541AFPEL
U13,15	9167055830	IC,HD74LV541AFPEL
U14,19	9167067730	IC,HD74LV245AFPEL
U16	9167064830	IC,HD74LV08AFP
U17	S0038953	IC,ADSP-21065L
U18	9173020430	CRYSTAL,MIN35A-T 30.0MHZ
U20	9167069130	IC,HD74LV574AFPEL
U21	9167055830	IC,HD74LV541AFPEL
U22,23	9167070830	IC,DS90LV032ATM
U24,25	9167070930	IC,DS90LV031ATM

IF-AN/DM (OPTION)

REF.NO.	PARTS NO.	DESCRIPTION
	*9260366000	PANEL,AN/DM CARD
	*9260366200	LEVER SLOT
	*9260330700	D-SUB SCREW,HW-H118MN02
	*9145332000	GATHER PCBA,IF-AN/DM
		PCB,IF-AN/DM
D010,020	9165023530	DIODE,1SS355 TE17
D011-018	9165023530	DIODE,1SS355 TE17
D021-028	9165023530	DIODE,1SS355 TE17
D031-038	9165023530	DIODE,1SS355 TE17
D041-048	9165023530	DIODE,1SS355 TE17
J010,020	9144482000	D-SUB,DB-25SLURL2
L010,020	9122022330	COIL,LQH4C100K04
L011-018	9173020930	BEADS,BLM11B121SD
L021-028	9173020930	BEADS,BLM11B121SD
L031-038	9173020930	BEADS,BLM11B121SD
L041-048	9173020930	BEADS,BLM11B121SD
L050,060	9122022730	BEAD,BK1608HS102-T
L070,080	9122022730	BEAD,BK1608HS102-T

IF-AN/DM (OPTION)

REF.NO.	PARTS NO.	DESCRIPTION
L090,100	9122022730	BEAD,BK1608HS102-T
L110,120	9122022730	BEAD,BK1608HS102-T
L130,140	9122022730	BEAD,BK1608HS102-T
L150,160	9122022730	BEAD,BK1608HS102-T
L501-504	9122022330	COIL,LQH4C100K04
P020	9143174000	PLUG,6P B6B-EH-A
Q010,030	9163021430	DTR,DTA114EKAT-146
Q011-018	9163021430	DTR,DTA114EKAT-146
Q020,040	9163461230	DTR,DTC114YKAT-146
R300,310	9111306030	R,ARRAY MNR15E0RPJ103
R320,330	9111306030	R,ARRAY MNR15E0RPJ103
U010	S00438000A	IC,PLD(AD)DM OPT
U020	9167026700	IC,NJM7812FA (3P)
U030	9167035800	IC,NJM7912FA (3P)
U501-504	9167064530	IC,AK5383VS-E2
U521-U524	9167076430	IC,AK4393VF
SW011-018	9135041730	SLIDE SW,CHS-01TA1
SW021-028	9135041730	SLIDE SW,CHS-01TA1
SW031-038	9135041730	SLIDE SW,CHS-01TA1
SW041-048	9135041730	SLIDE SW,CHS-01TA1

MAIN PCB

SIDE A

