MAIN PCB CPU BLOCK DIAGRAM (part 2)

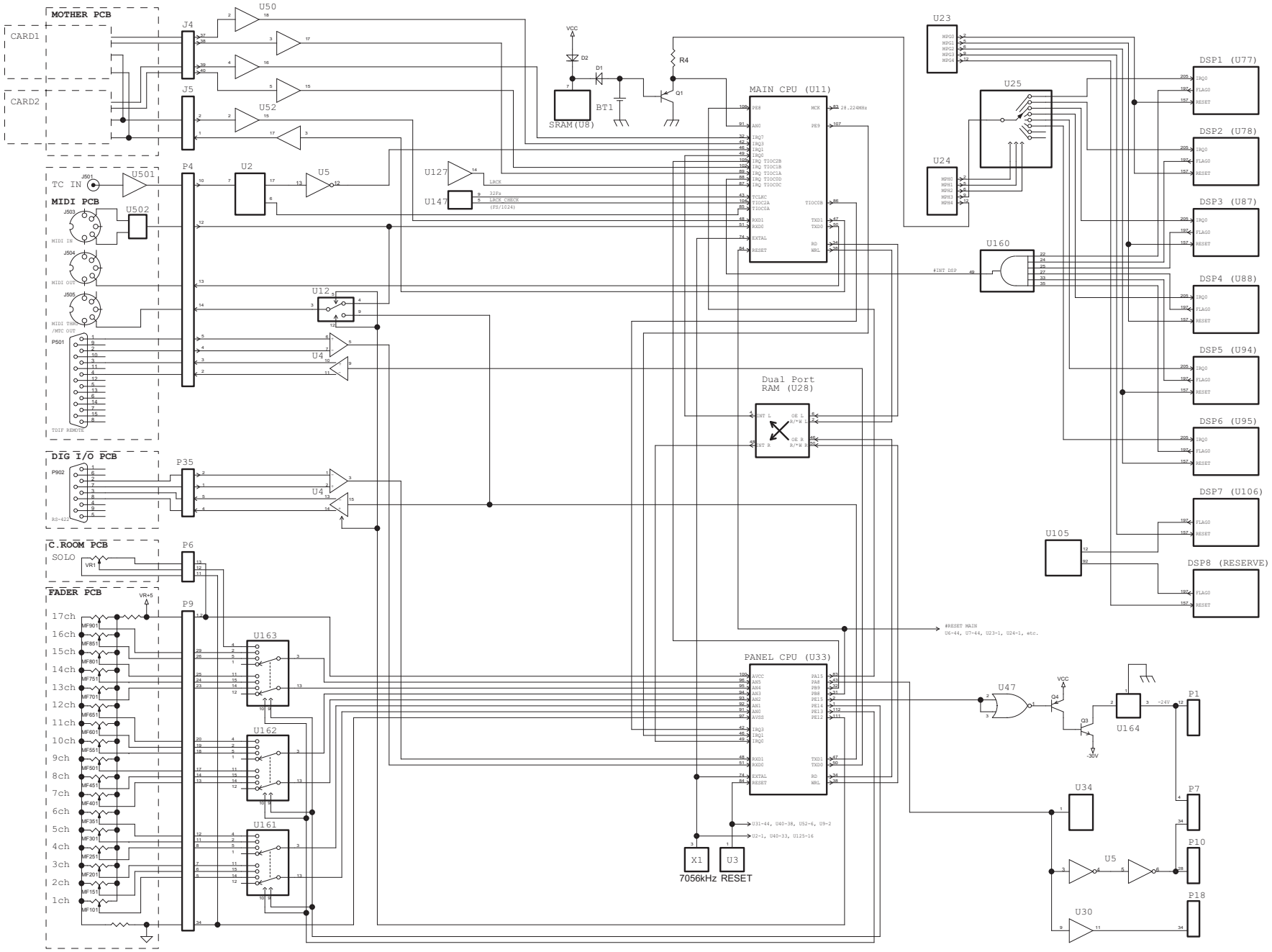

MAIN PCB CLOCK CIRCUIT BLOCK DIAGRAM

(MAIN PCB CIRCUIT DIAGRAM page 11)

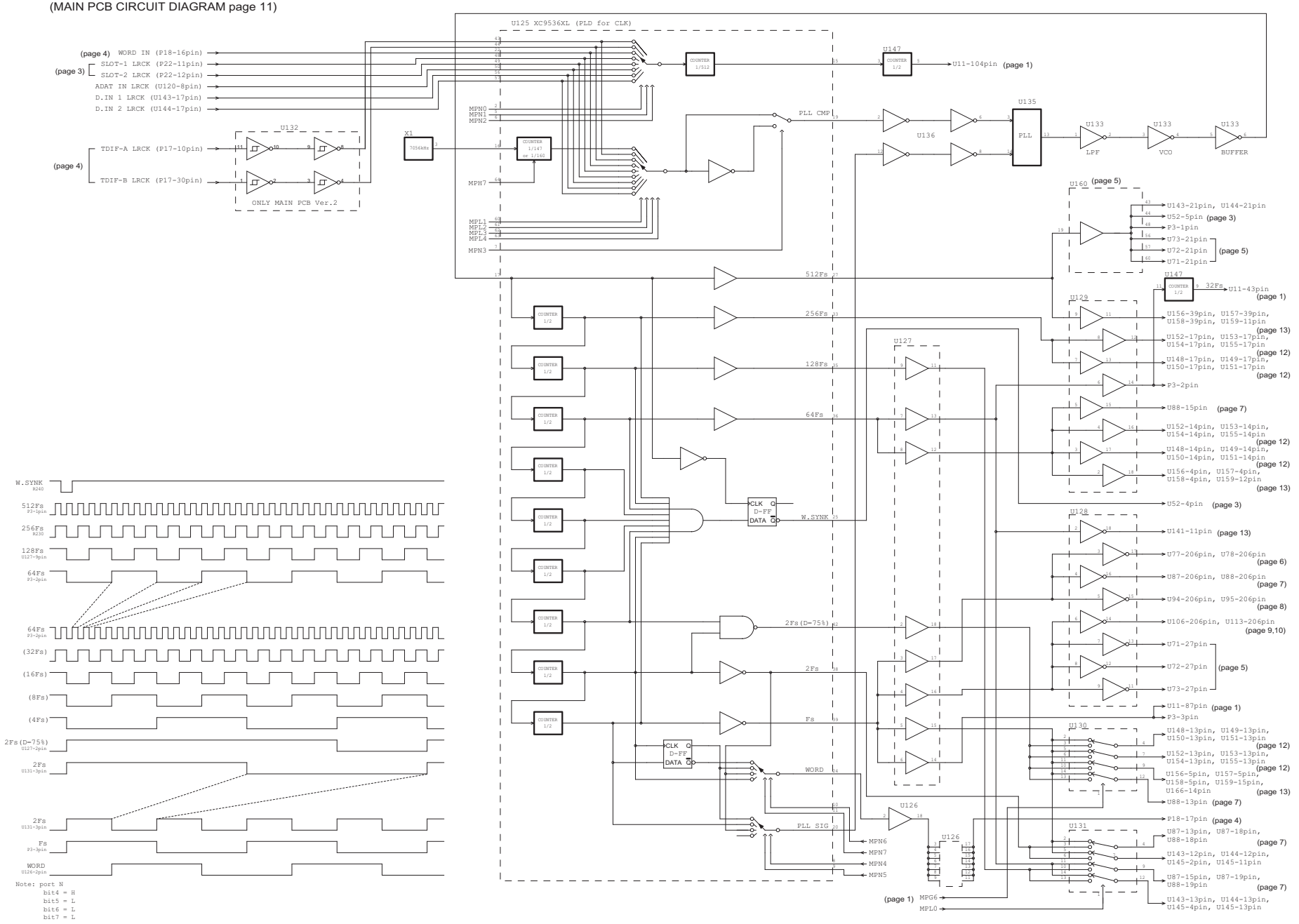

MAIN PCB IOX BLOCK DIAGRAM

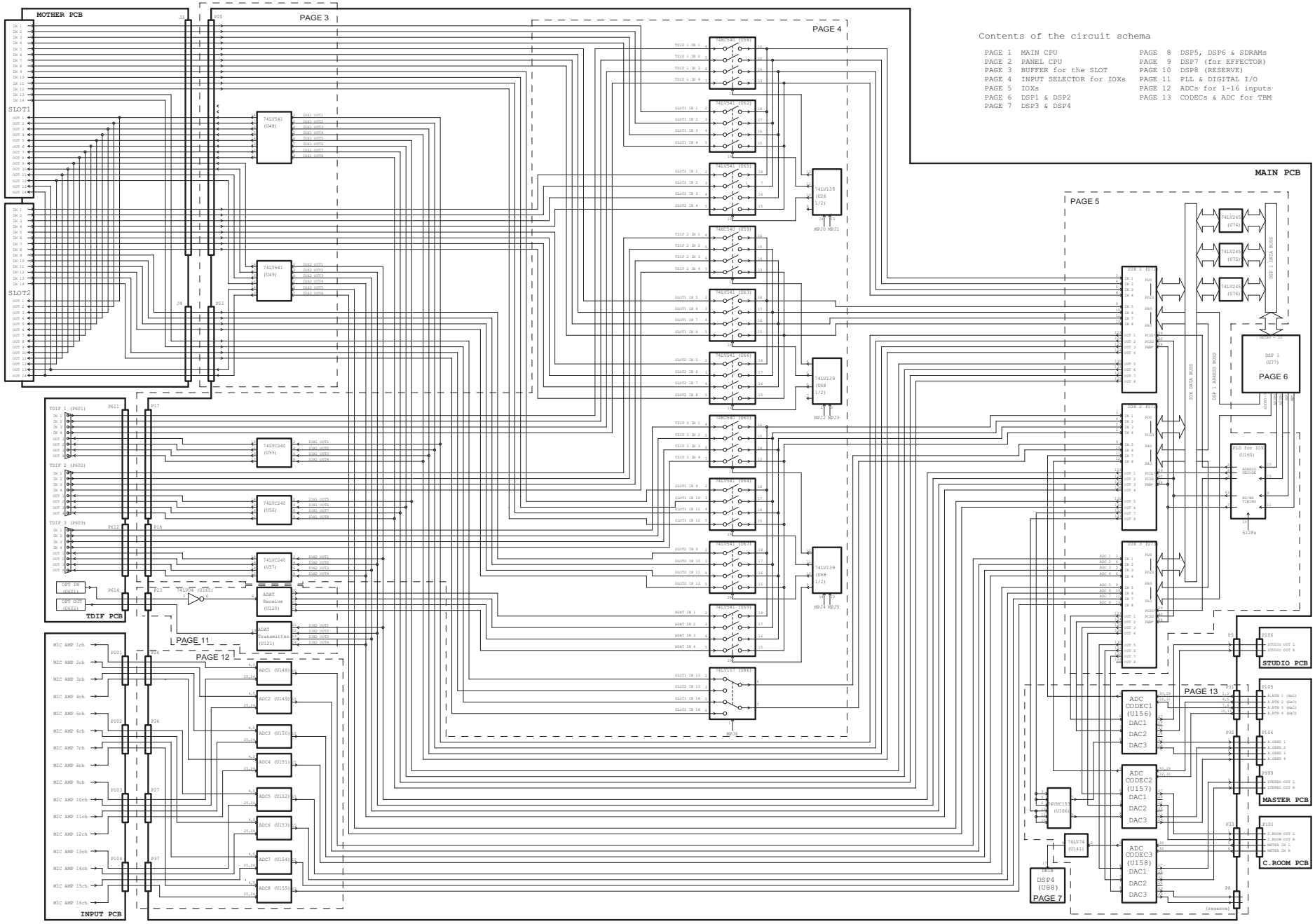

Contents of the circuit schema

PAGE 1 MAIN CPU	PAGE 8 DSP5, DSP6 & SDRAMs
PAGE 2 PANEL CPU	PAGE 9 DSP7 (for EFFECTOR)
PAGE 3 BUFFER for the SLOT	PAGE 10 DSP8 (RESERVE)
PAGE 4 INPUT SELECTOR for IOXs	PAGE 11 PLL & DIGITAL I/O
PAGE 5 IOXs	PAGE 12 ADCs for 1-16 inputs
PAGE 6 DSP1 & DSP2	PAGE 13 CODECs & ADC for TBM
PAGE 7 DSP3 & DSP4	

MAIN PCB DSP BLOCK DIAGRAM

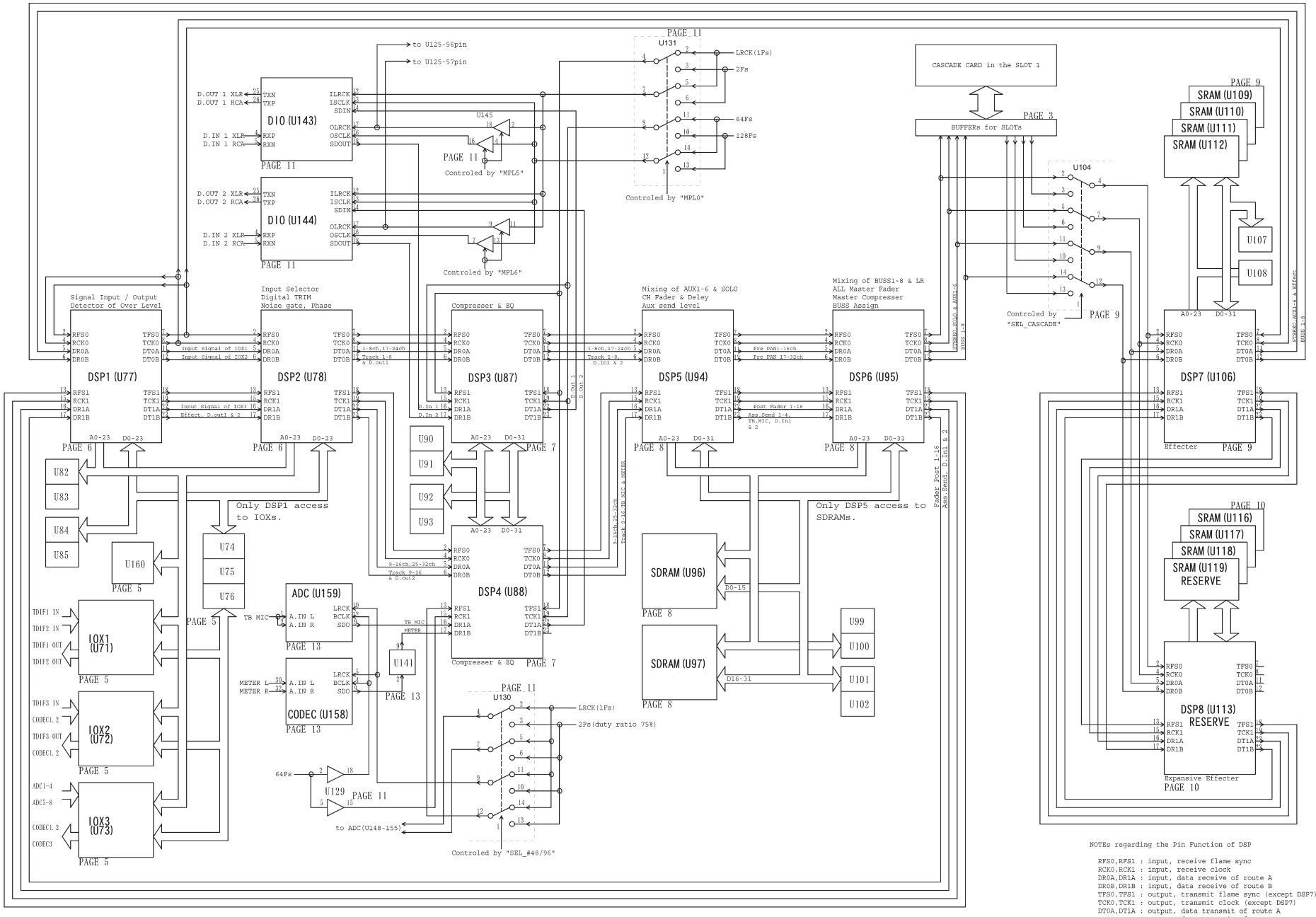

NOTEs regarding the Pin Function of DSP

RFS0,RFS1 : input, receive flame sync
RCK0,RCK1 : input, receive clock
DR0A,DR1A : input, data receive of route A
DR0B,DR1B : input, data receive of route B
TFS0,TFS1 : output, transmit flame sync (except DSP7)
TCK0,TCK1 : output, transmit clock (except DSP7)
DT0A,DT1A : output, data transmit of route A
DT0B,DT1B : output, data transmit of route B

MAIN PCB DSP Architecture 1/6 (Overview)

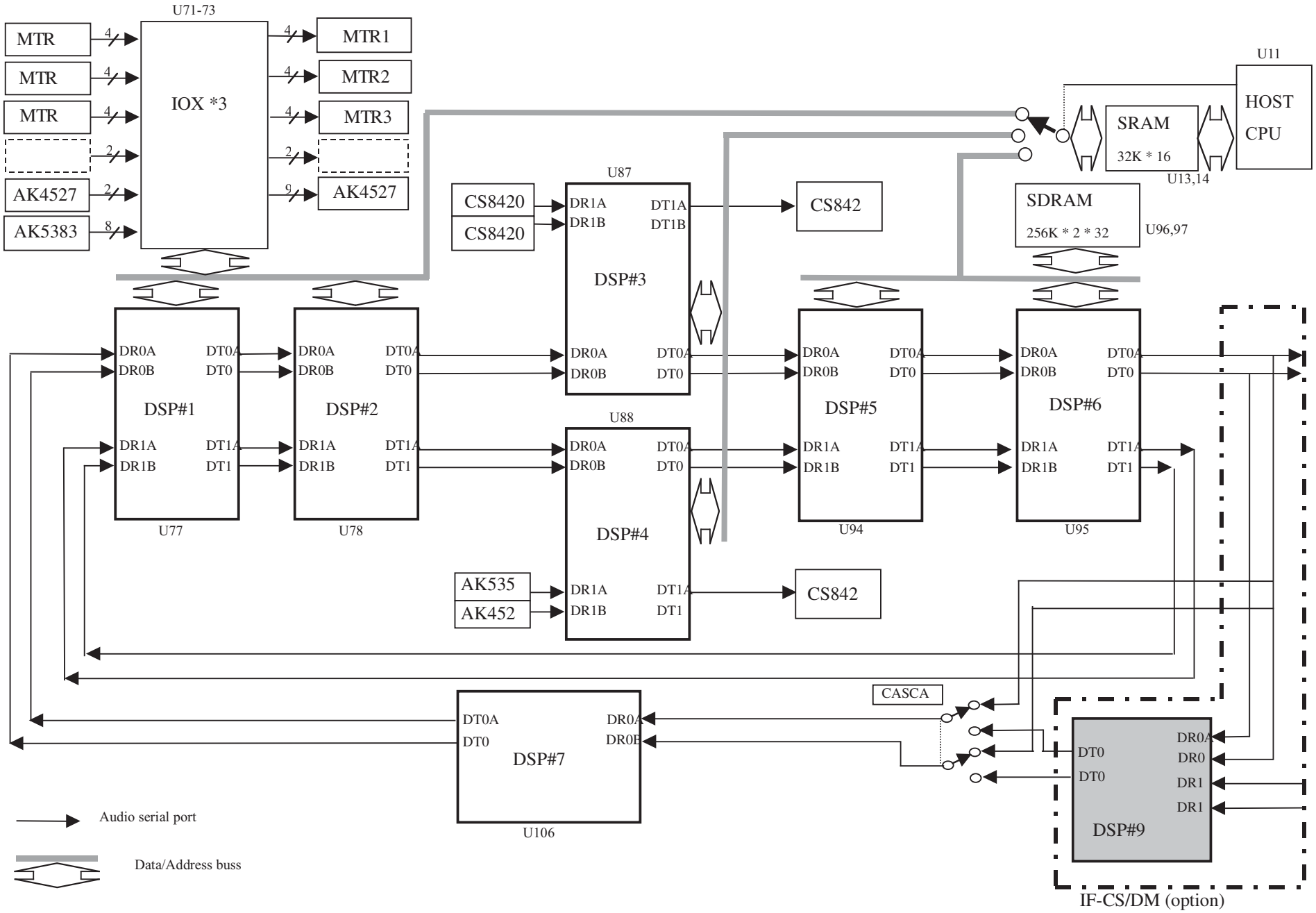

MAIN PCB DSP Architecture 2/6 (DSP #1 & 2)

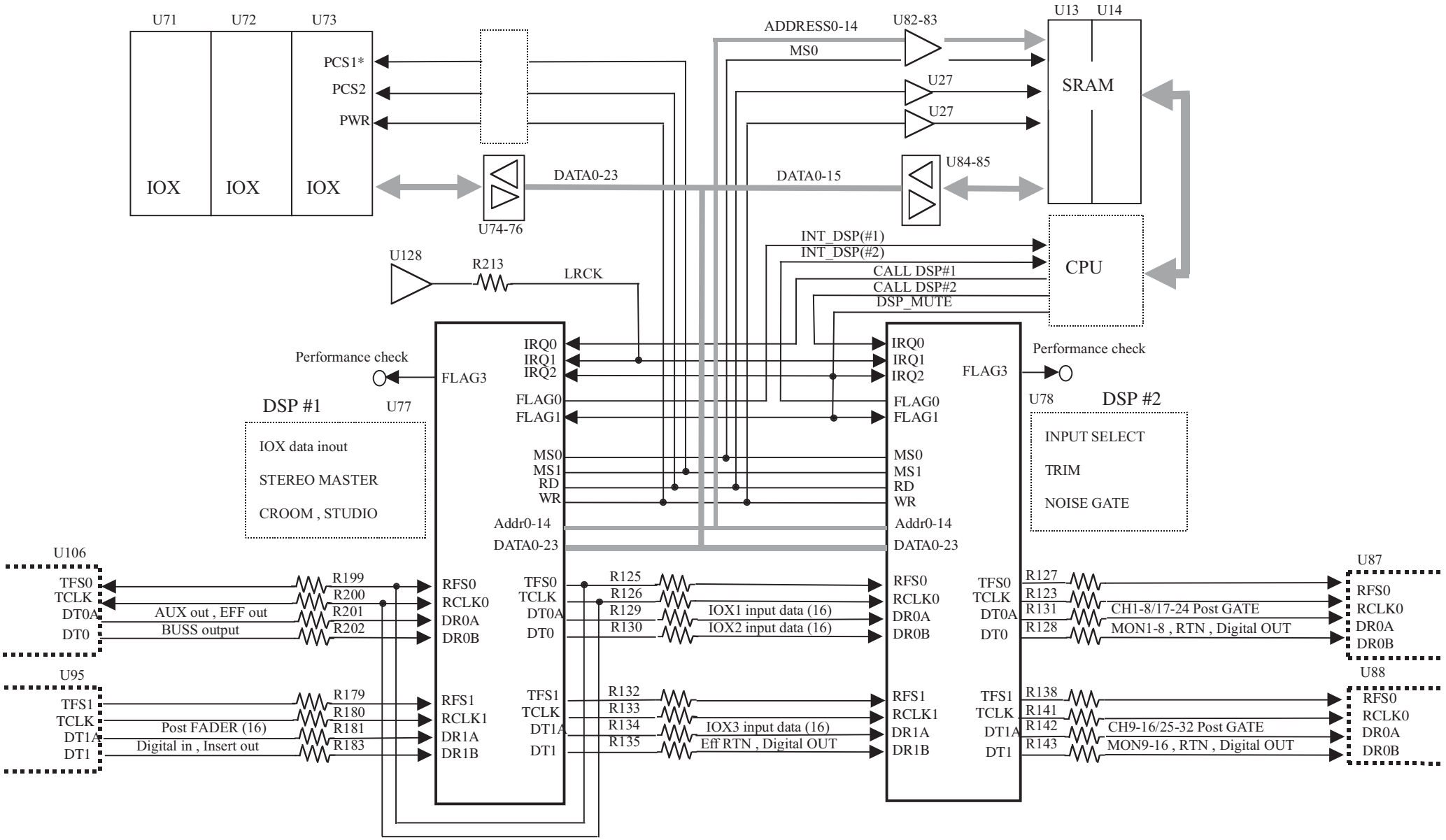

MAIN PCB DSP Architecture 3/6 (DSP #3 & 4)

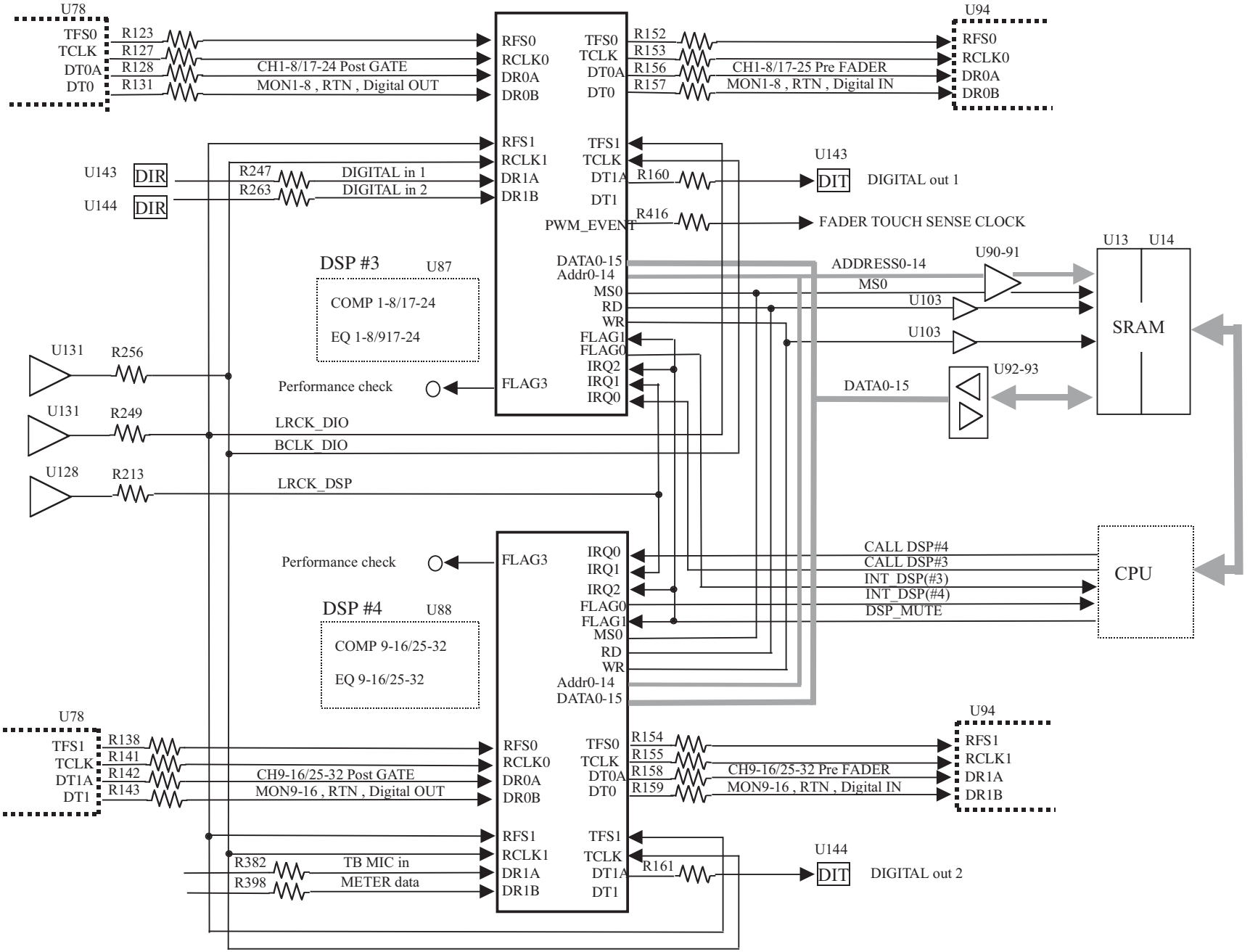

MAIN PCB DSP Architecture 4/6 (DSP #5 & 6)

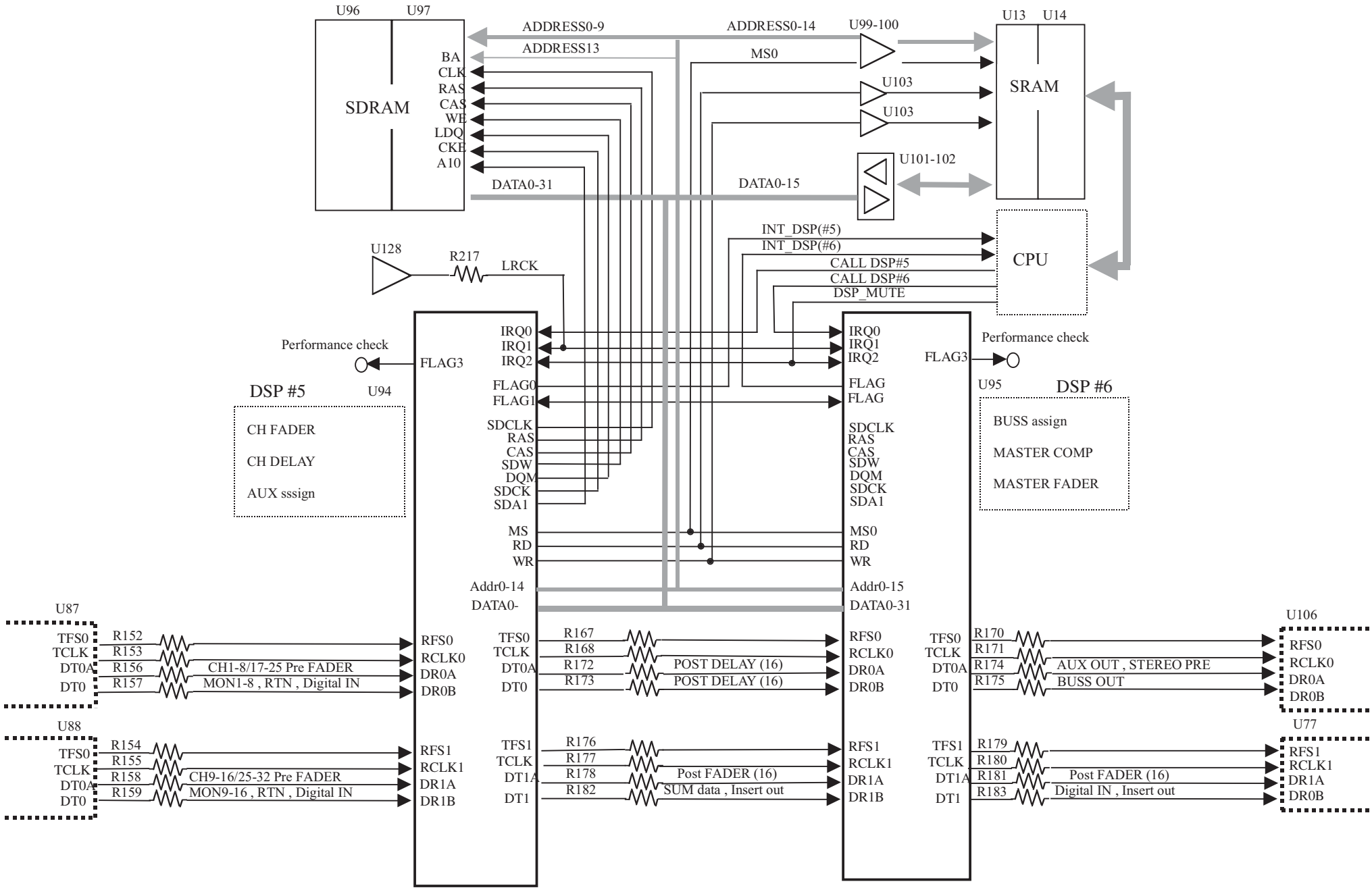

MAIN PCB DSP Architecture 5/6 (DSP #7)

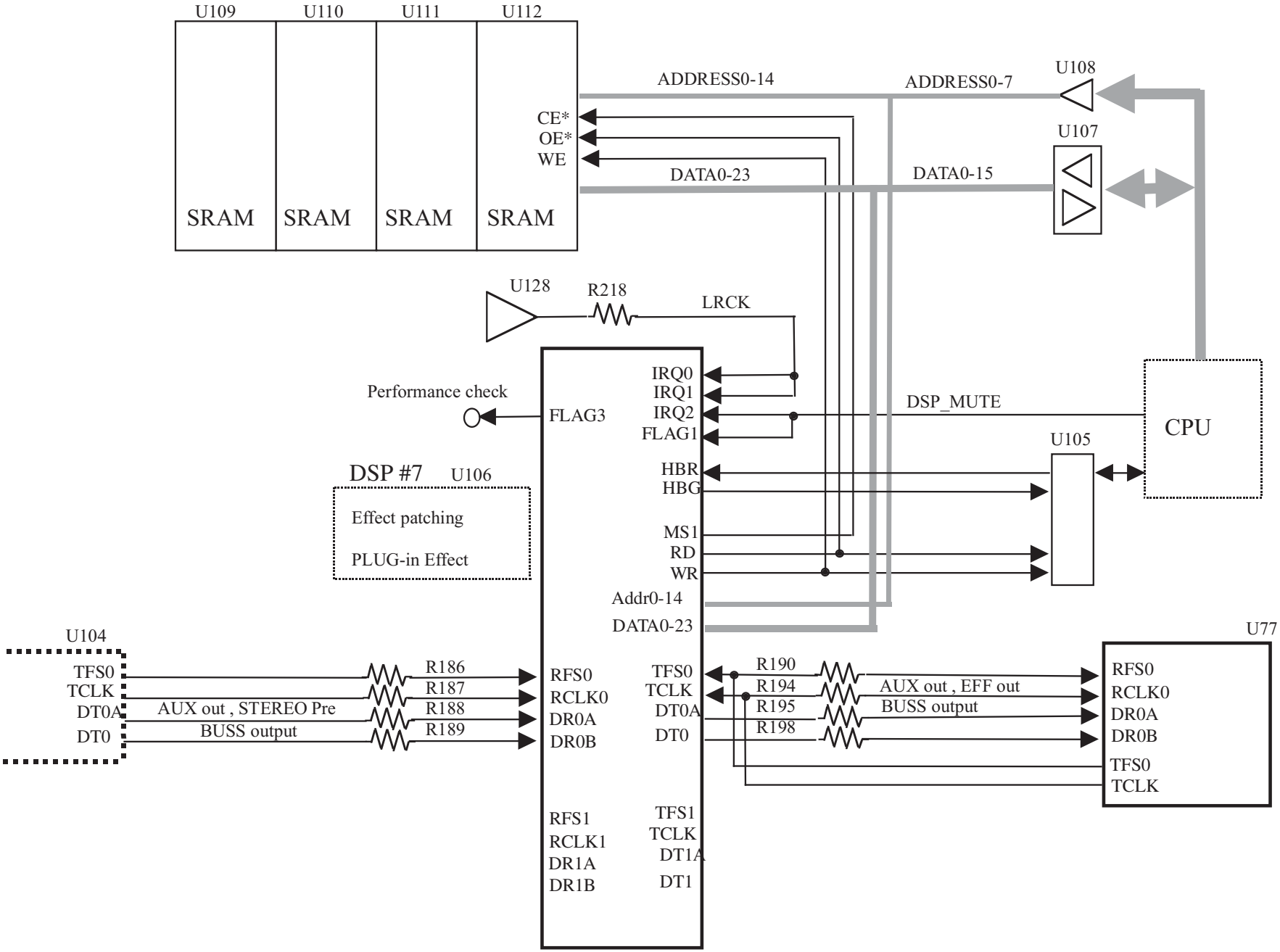

MAIN PCB DSP Architecture 6/6 (DSP #9 IF-CS/DM)

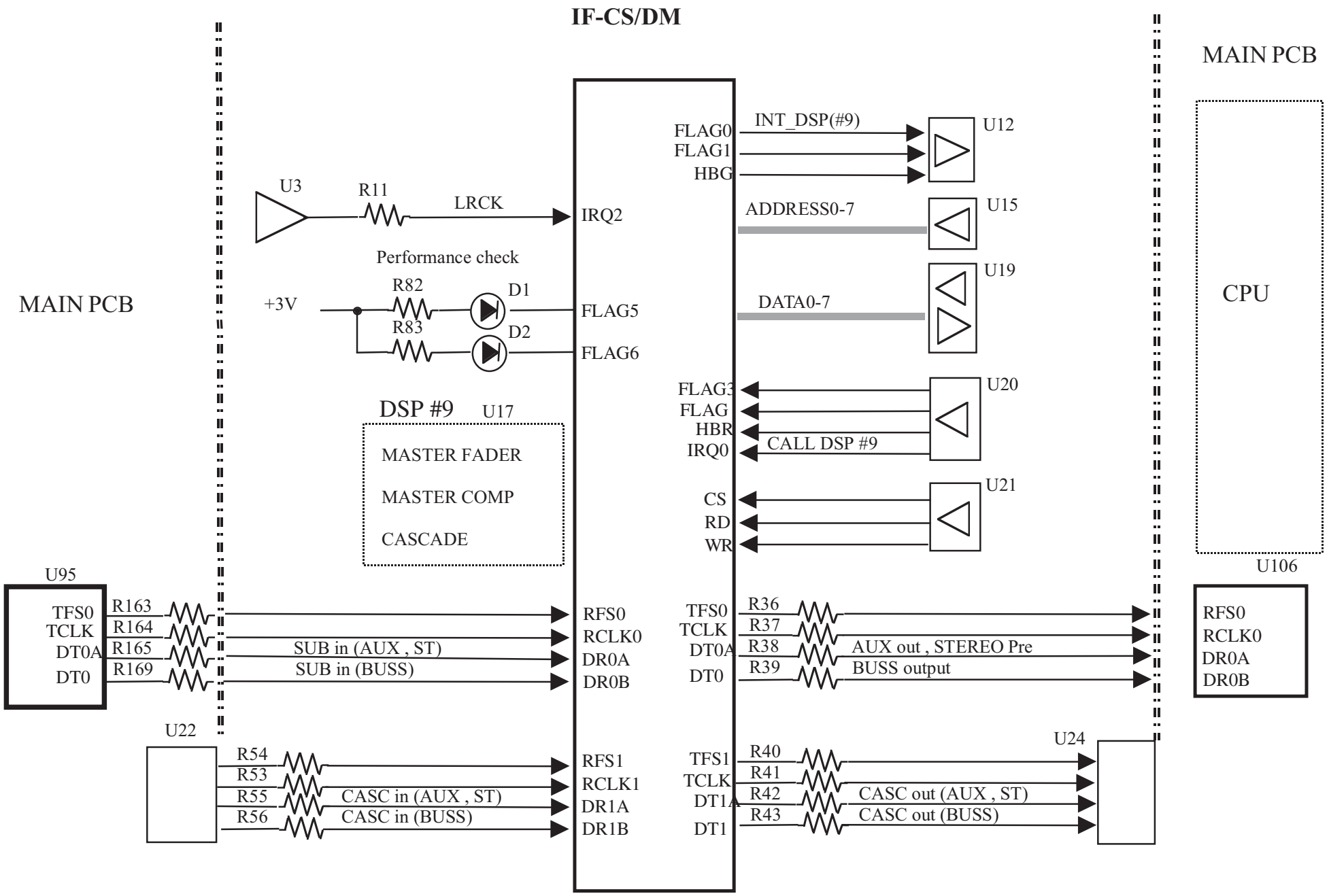

MASTER SECTION

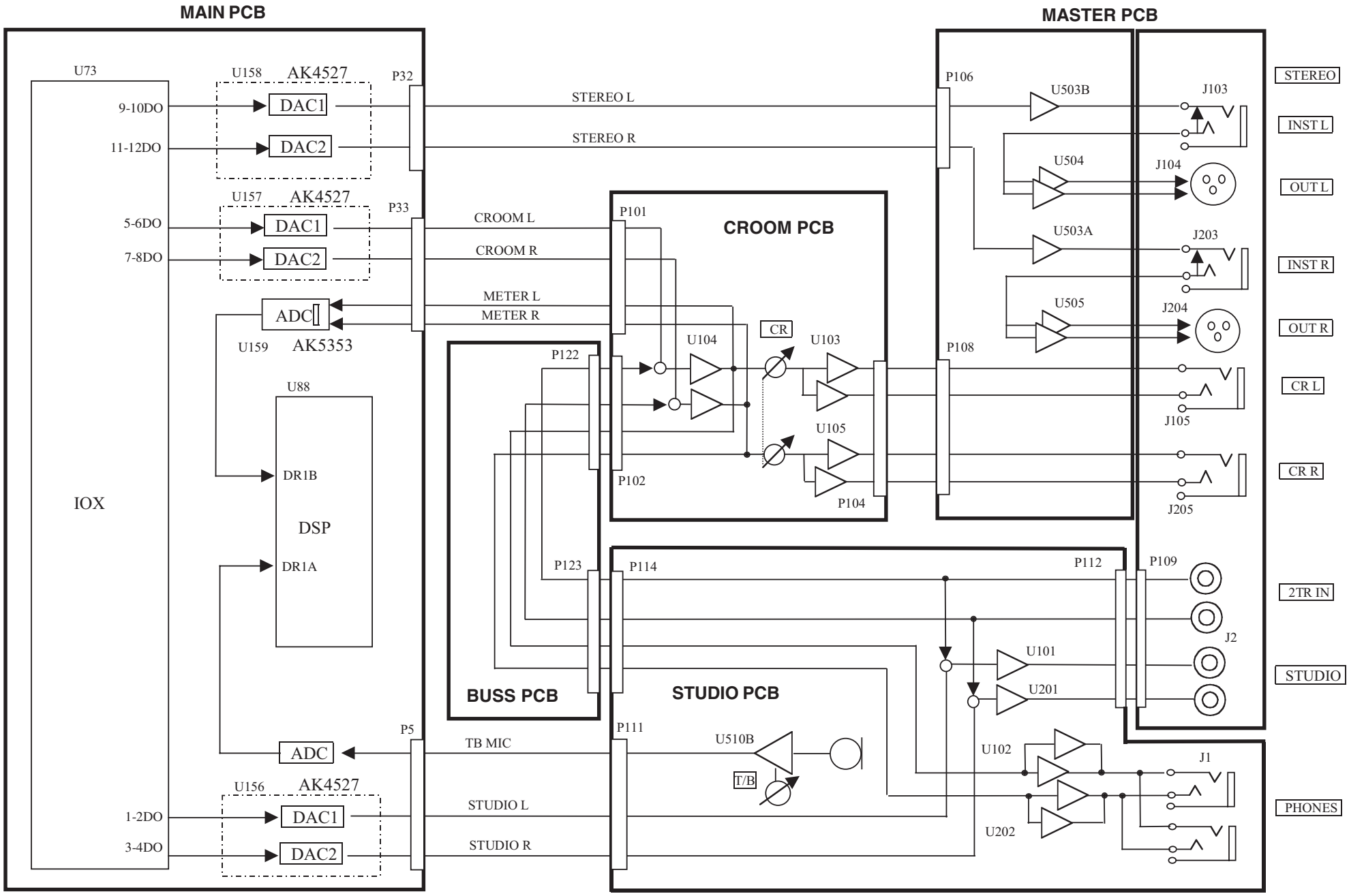

MTR IN/OUT SECTION (TDIF/ADAT/SLOT)

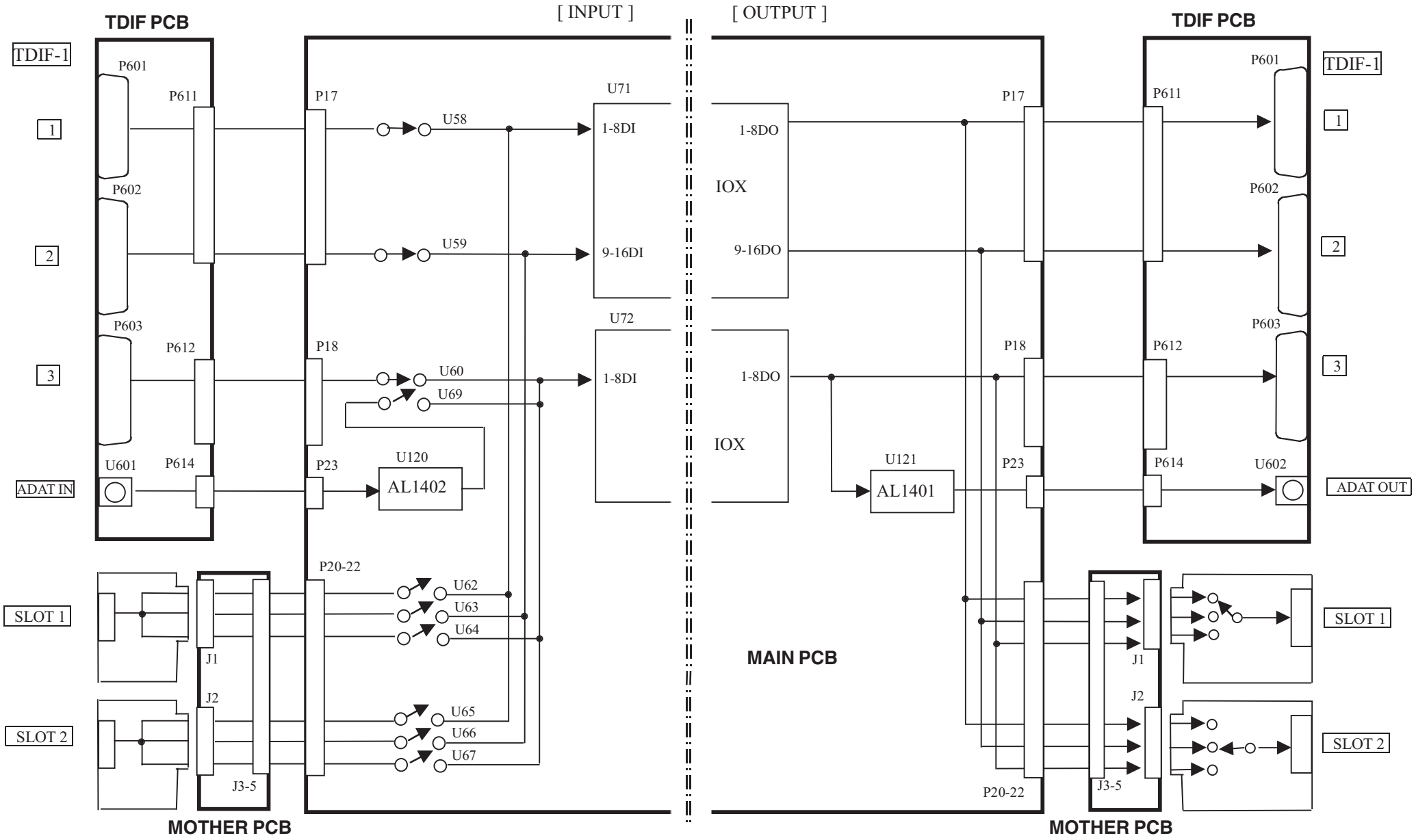

MIC SECTION

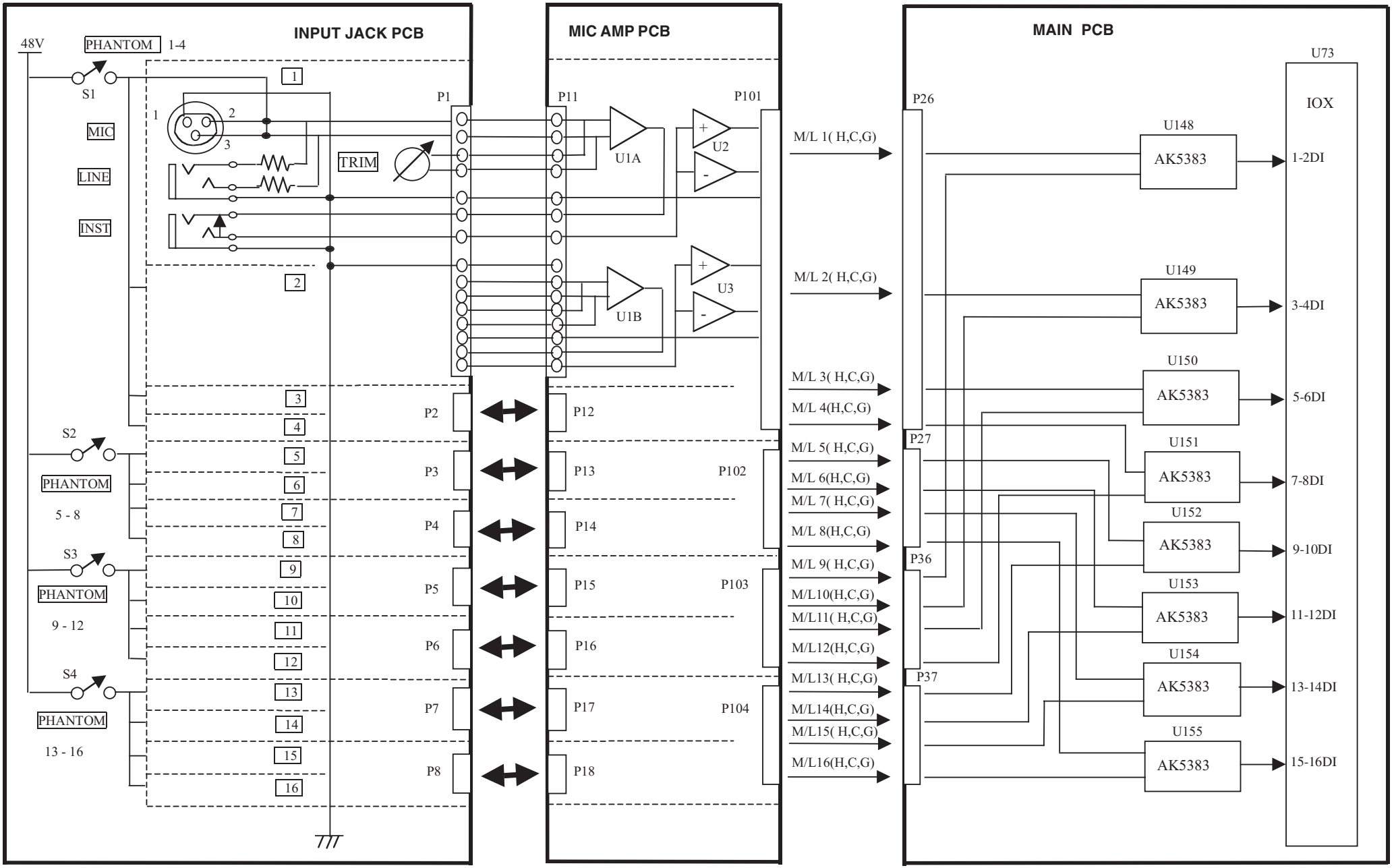
INPUT JACK PCB
MIC AMP PCB
MAIN PCB
48V
PHANTOM 1-4
S1
MIC
LINE
INST
TRIM
P1
P11
P101
U1A
U1B
U2
U3
M/L 1(H,C,G)
M/L 2(H,C,G)
M/L 3(H,C,G)
M/L 4(H,C,G)
M/L 5(H,C,G)
M/L 6(H,C,G)
M/L 7(H,C,G)
M/L 8(H,C,G)
M/L 9(H,C,G)
M/L10(H,C,G)
M/L11(H,C,G)
M/L12(H,C,G)
M/L13(H,C,G)
M/L14(H,C,G)
M/L15(H,C,G)
M/L16(H,C,G)
P2
P3
P4
P5
P6
P7
P8
P12
P13
P14
P15
P16
P17
P18
P102
P103
P104
S2
PHANTOM
5 - 8
S3
PHANTOM
9 - 12
S4
PHANTOM
13 - 16
P26
P27
P36
P37
U73
IOX
U148
AK5383
1-2DI
U149
AK5383
3-4DI
U150
AK5383
5-6DI
U151
AK5383
7-8DI
U152
AK5383
9-10DI
U153
AK5383
11-12DI
U154
AK5383
13-14DI
U155
AK5383
15-16DI

ASSIGNABLE SEND/RETURN & DIGITAL IN/OUT SECTION

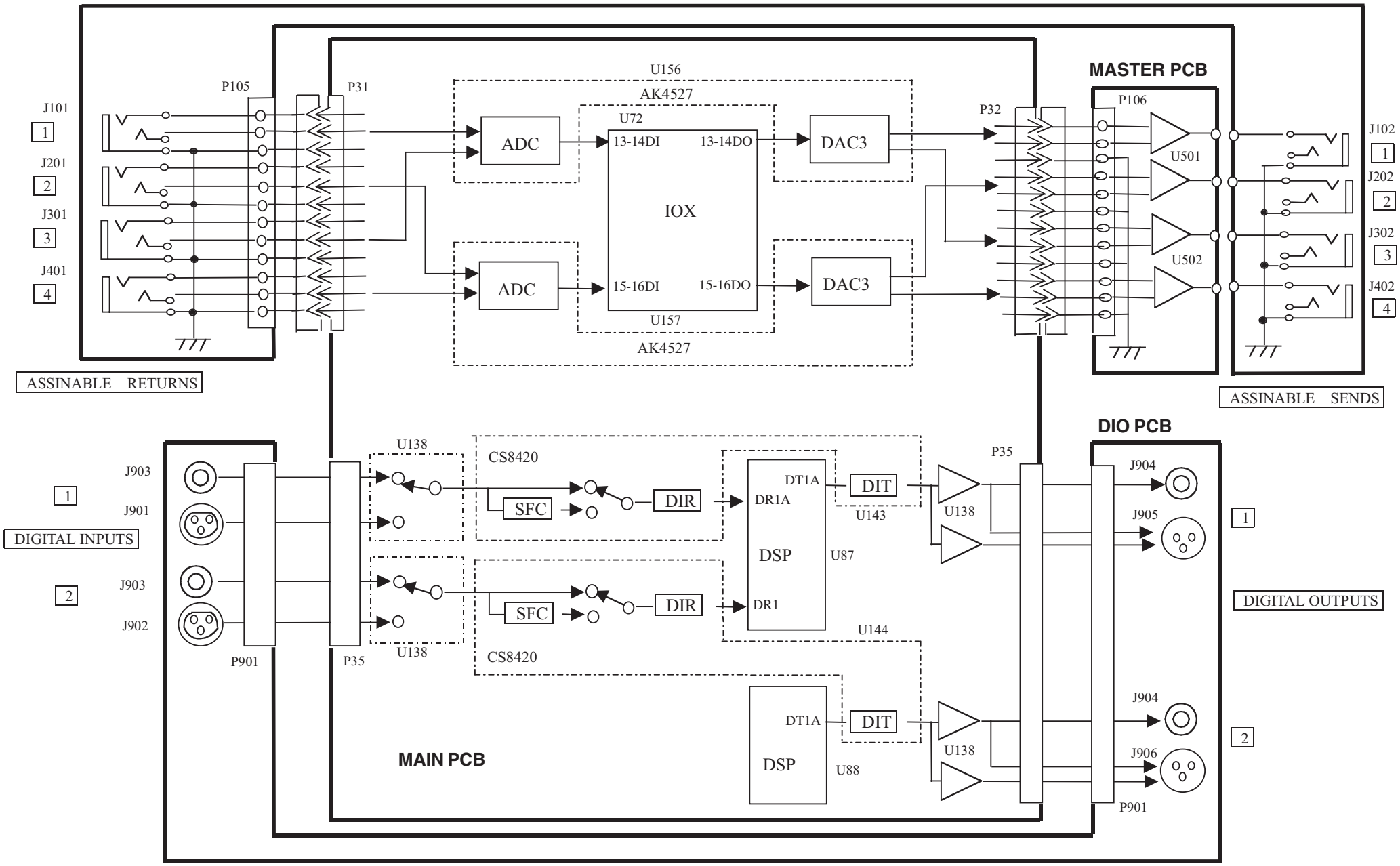

POWER SUPPLY SECTION

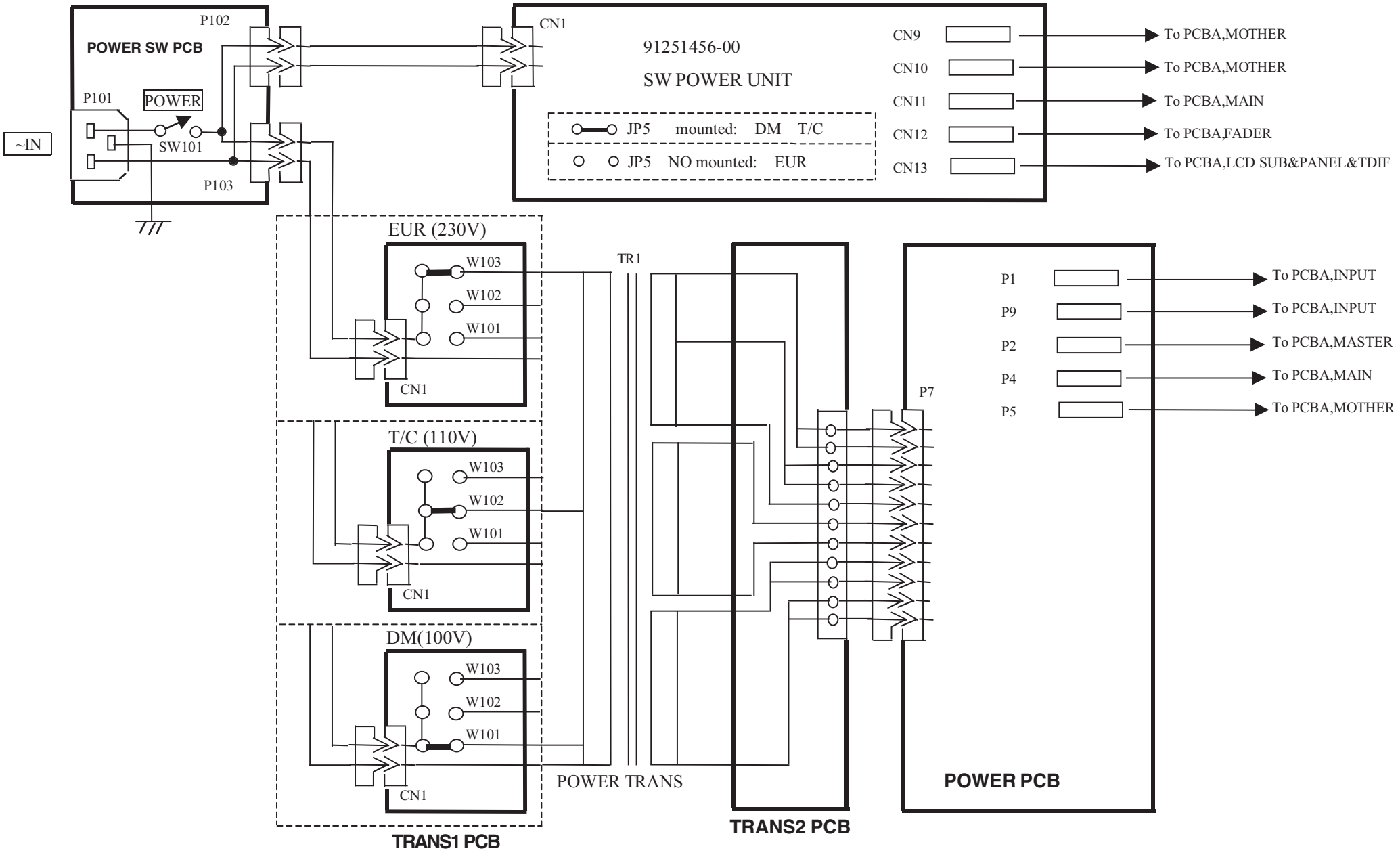

PARTS LIST SECTION

NOTES

- PC boards shown are viewed from parts side.
- Parts marked with ∗ require longer delivery time.
- The parts with no reference number or no parts number in the exploded views are not supplied.
- As regards the resistors and capacitors, refer to the circuit diagrams contained in the manual.
- ⚠Parts marked with this sign are safety critical components. They must be replaced with identical components - refer to the appropriate parts list and ensure exact replacement.
- Parts of [ ] mark can be used only with the version designated.
  [J] : JAPAN [K] : KOREA [A] : AUSTRALIA [US/C] : U.S.A./CANADA
  [E] : EUROPE [UK] : U.K.

注 意

- プリント基板は部品面が示されています。
- ∗印の部品は納期が若干かかります。
  あらかじめご了承ください。
- 分解図に部番のない部品及び品番のない部品は供給しません。
- 標準の抵抗、コンデンサーは省略してあります。
  回路図を参照してください。
- ⚠は安全重要部品です。
  交換する時は必ずティアック指定の部品を使用してください。
- 仕向先
  [J] : JAPAN [K] : KOREA [A] : AUSTRALIA [US/C] : U.S.A./CANADA
  [E] : EUROPE [UK] : U.K.

8. EXPLODED VIEWS AND PARTS LIST

分解図とパーツリスト

EXPLODED VIEW-1

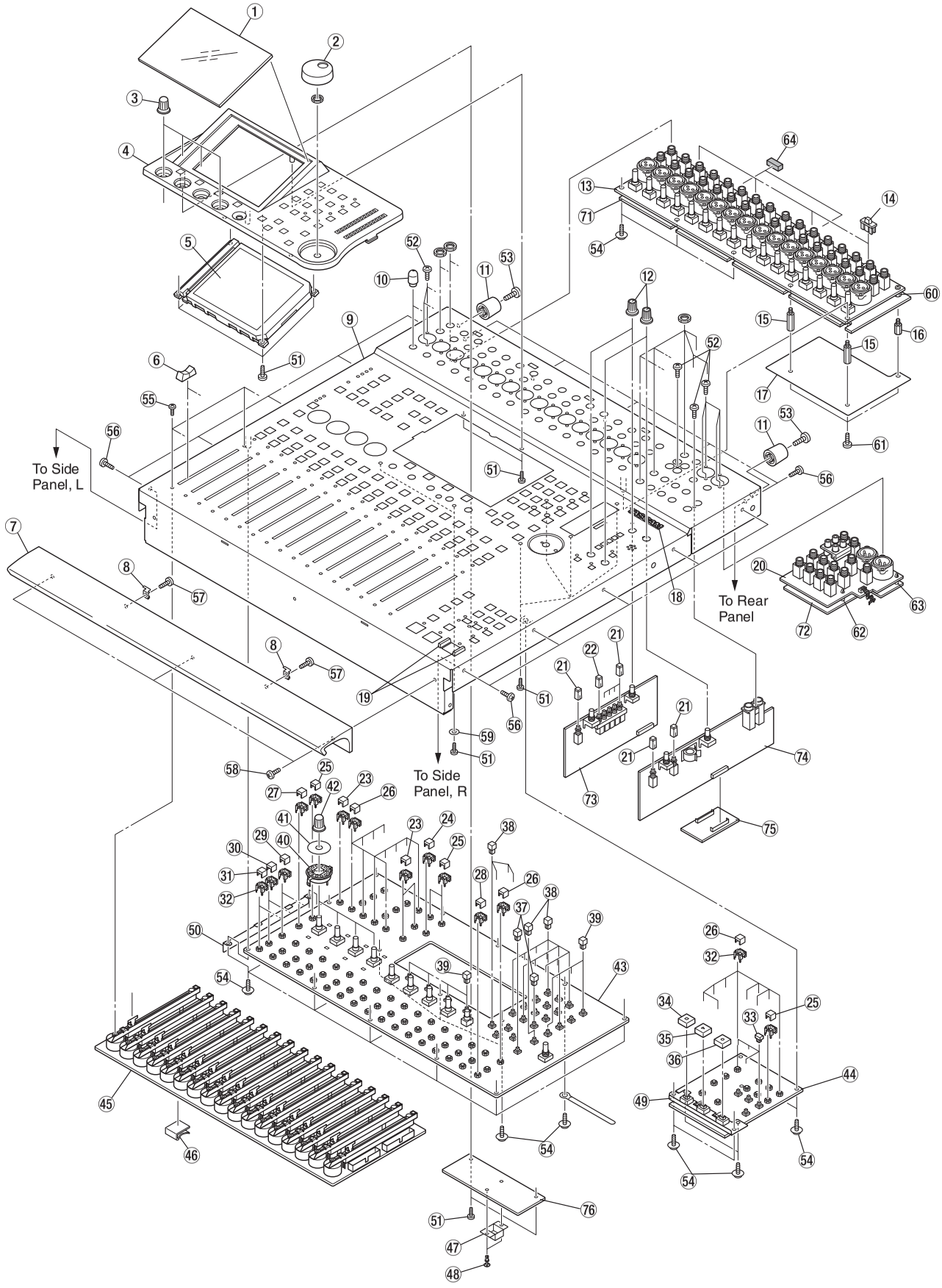

EXPLODED VIEW-1

REF.NO.	PARTS NO.	DESCRIPTION	REMARKS
1- 1	9260363101	WINDOW,LCD	
1- 2	9260385100	KNOB,JOG N63	
1- 3	M00630600C	KNOB,POD N61	
1- 4	9260361701	ESCUTCHEON,LCD	
1- 5	9174027100	LCD,MG3224C3-SBF	
1- 6	9260357800	KNOB,S-VR NICKEL	
1- 7	9260363201	PAD,582	
1- 8	*9260299600	BRACKET,PAD	
1- 9	*9260364904	TOP PANEL ASSY	
1-10	9260368000	KNOB,TRIM N61/N64	
1-11	9260354800	FOOT,FFT-4	
1-12	5801631800	KNOB,R-VR N61/N66	
1-13		INPUT JACK PCB ASSY ·····	GATHER PCB ASSY,INPUT (Refer to page 66)
1-14	M00006100A	KNOB,SLIDE GY	
1-15	*9783803025	LOCK SCREW,M3X25X6	
1-16	*9783803015	LOCK SCREW,M3X15X6	
1-17	*9260388600	SHIELD COVER,INPUT	
1-18	9260268802	TASCAM BADGE	
1-19	M00207800A	ESCUTCHEON,GUARD	
1-20		MASTER JACK PCB ASSY ·····	GATHER PCB ASSY,MASTER (Refer to page 68)
1-21	5801632501	PUSH BUTTON COVER,WHT/N63	
1-22	9260306400	PUSH BUTTON COVER,WHT/N61	
1-23	9260362701	BUTTON,BLT-IN (WHT)	
1-24	9260362601	BUTTON,BLT-IN (R23)	
1-25	9260362801	BUTTON,BLT-IN (N64)	
1-26	9260299302	BUTTON,BLT-IN LED	
1-27	9260362901	BUTTON,BLT-IN (266C)	
1-28	9260324702	BUTTON,BLT-IN LED(SOLO)	
1-29	9260351901	BUTTON,BLT-IN LED(REC)	
1-30	9260351701	BUTTON,BLT-IN LED(SEL)	
1-31	9260324502	BUTTON,BLT-IN LED (MUTE)	
1-32	9260299400	BASE,BLT-IN LED	
1-33	M00630703A	BUTTON,6.4X8.4 266C	
1-34	9260351300	BUTTON,STOP	
1-35	9260351400	BUTTON,PLAY	
1-36	9260351500	BUTTON,REC	
1-37	9260362000	BUTTON,8X8 WHT	
1-38	9260362100	BUTTON,8X8 N62	
1-39	9260362200	BUTTON,8X8 N64	
1-40	9260363300	ESCUTCHEON RING	
1-41	9260362301	PLATE RING	
1-42	M00630601C	KNOB,POD N63	
1-43		PANEL PCB ASSY ·····	GATHER PCB ASSY,PANEL (Refer to page 68)
1-44		TRANSPORT PCB ASSY ·····	GATHER PCB ASSY,TRANSPORT (Refer to page 69)
1-45		FADER PCB ASSY ·····	GATHER PCB ASSY,FADER (Refer to page 67)
1-46	9260367300	WIRE CLAMP,FCC-20	
1-47	9260384700	SHIELD COVER,LCD	
1-48	9260385200	PUSH RIVET,P3045	
1-49	*9260363400	BRACKET,TRANSPORT	
1-50	*9260388700	BRACKET,PANEL	

EXPLODED VIEW-1

REF.NO.	PARTS NO.	DESCRIPTION	REMARKS
1-51	*9783602606	SCREW,BTT-P M2.6X6	
1-52	*9783613008	SCREW,BTT-P M3X8 (BLK)	
1-53	*9780504010	SCREW,BH M4X10 (BLK)	
1-54	*9783103006	SCREW,CAP-S M3X6	
1-55	*9783573004	SCREW,WHIS BIND M3X4 (BLK)	
1-56	*9780503006	SCREW,BH M3X6 (BLK)	
1-57	*9783213006	SCREW,BTT-B M3X6	
1-58	*9780503008	SCREW,BH M3X8 (BLK)	
1-59	Vacant		
1-60	*9260389100	PCB SUPPORT,HP-8	
1-61	*9780403006	SCREW,BH M3X6	
1-62	*9260356300	SPACER SUPPORT,LCC-8	
1-63	*9260355700	SPACER SUPPORT,MC-8	
1-64	*9260366700	CUSHION,10X20X9	
1-71		MIC AMP PCB ·····	GATHER PCB ASSY,INPUT (Refer to page 66)
1-72		MASTER AMP PCB ASSY ·····	GATHER PCB ASSY,MASTER (Refer to page 68)
1-73		C.ROOM PCB ASSY ·····	GATHER PCB ASSY,MASTER (Refer to page 68)
1-74		STUDIO PCB ASSY ·····	GATHER PCB ASSY,MASTER (Refer to page 68)
1-75		BUSS PCB ASSY ·····	GATHER PCB ASSY,MASTER (Refer to page 68)
1-76		LCD SUB PCB ASSY ·····	GATHER PCB ASSY,TRANSPORT (Refer to page 69)

EXPLODED VIEW-2

