Electro-Voice®

DL18MT

Low-Frequency Reproducer

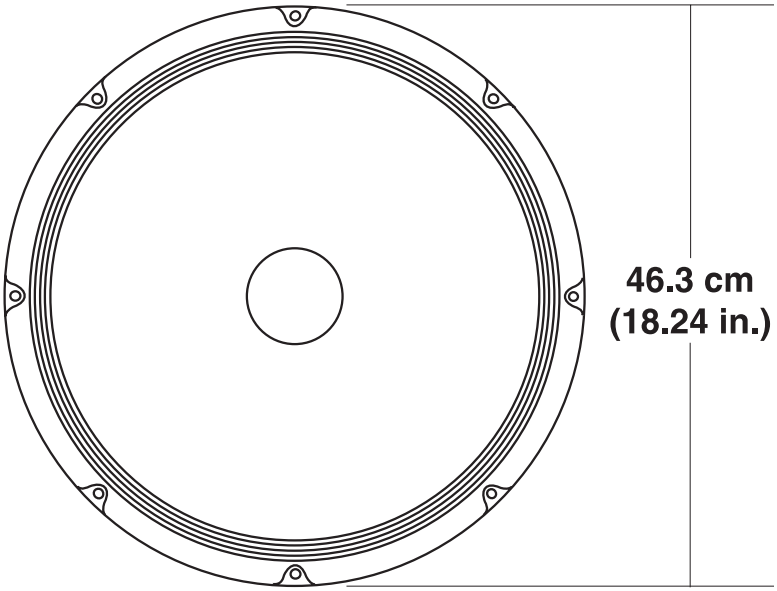

- **Subwoofer down to 30 Hz without EQ**
- **High excursion for low-frequency clarity and punch**
- **TIR™ and FDD™ reduce distortion, keep voice coil cool, and smooth frequency response**
- **400 watts long-term power capacity**
- **96-dB sensitivity**
- **Thermally efficient magnet assembly for high reliability**
- **PROTEF™ coating helps protect woofer from excessive power peaks**

SPECIFICATIONS

Usable Axial Frequency Response in Typical Enclosure (8.0 ft³ tuned to 36 Hz), Swept One-Third-Octave Pink Noise, 4 Volts at 10 Feet, Anechoic Environment, Normalized for 1 Watt/1 Meter (see Figure 1):[1]
30-3,000 Hz

Power Handling (see Power-Handling Test section),
Per ANSI/EIA RS-426-A 1980:
400 watts
Per AES2-1984/ANSI S4.26-1984,
50-500 Hz: 400 watts

Sensitivity (SPL at 1 m, 1 watt input power, nominal impedance),
200- to 4,000-Hz Average:
96 dB
100- to 800-Hz Average:
96 dB

Impedance Response (see Figure 4 for response in typical enclosure; see Figure 3 for response in standard baffle),
Minimum (Z_{min}):
7.5 ohms at 150 Hz
Nominal:
8 ohms

Distortion Response (on axis in standard baffle, 10% rated input power; see Figure 6),
Second Harmonic,
100 Hz: –45 dB (0.6%)
1,000 Hz: –41 dB (0.9%)
Third Harmonic,
100 Hz: –41 dB (0.9%)
1,000 Hz: –38 dB (1.3%)

Beamwidth (angle included by 6-dB-down points on polar responses for octave bands of pink noise; see Figure 7),
500 Hz: 90°
1,000 Hz: 70°
2,000 Hz: 45°

1. For swept-sine-wave response in standard baffle, per AES2-1984/ANSI S4.26-1984, see Figure 2.

Physical Constants,
Effective Piston Diameter:
406.4 mm (16.0 in.)
Moving Mass (M_{MD}):
0.151 kg (0.333 lb)
Voice-Coil Winding Depth:
20.3 mm (0.8 in.)
Voice-Coil Diameter:
63.5 mm (2.5 in.)
Voice-Coil Winding Length:
26.9 m (88.4 ft)
Top Plate Thickness at Voice Coil:
10.9 mm (0.43 in.)
BL Factor:
22.5 tesla meters

Thiele-Small Parameters (broken in),
f_s: 24 Hz
V_{AS}: 580.5 liters (20.5 ft³)
Q_{ES}: 0.269
Q_{MS}: 6.59
Q_{TS}: 0.259
R_E: 6.0 ohms
η_0: 2.9%
S_D: 0.130 m² (201 in.²)
M_{MD}: 0.151 kg (0.333 lb)
L_E: 2.7 mH
C_{MS}: 0.246 mm/N
R_{MS}: 4.08 mechanical ohms
P_E**(max) (per ANSI/EIA RS-426-A 1980):**
400 watts
X_{max}[2]: 5.59 mm (0.22 in.)
X_{lim}[3]: 12.7 mm (0.50 in.)
V_D (S_D x X_{max}): 0.725 liters (0.0256 ft³)

Thermal Rise after Power Test:
85 °C (185 °F)

Typical Vented Enclosures (see Typical Enclosures section):
8.0 ft³ tuned to 36 Hz

2. X_{max} is the one-way peak excursion which produces 10% THD of the current waveform when driven at f_s.
3. Displacement limit is the one-way peak excursion which, when exceeded, will cause physical damage to the drive mechanism.

Typical Amplifier Size (see Typical Amplifier Size section):
400-800 watts

Mounting Information (see Mounting section),
Bolt-Hole Diameter (eight evenly spaced holes):
7.1 mm (0.28 in.)
Bolt Circle Diameter:
438 mm (17.25 in.)
Baffle Opening Diameter (front or rear mounting):
422 mm (16.6 in.)

Electrical Connections (see Electrical Connectors section),
Connector Type:
Push terminals for bare wires
Polarity:
A positive voltage applied to the positive (red) terminal produces a positive pressure at the front of the cone

Additional Descriptive Information,
Magnet Weight:
2.2 kg (4.9 lb)
Magnet Material:
Barium ferrite
Frame:
Cast aluminum
Frame Finish:
Textured black epoxy
Plating of Steel Parts:
Bright Cadmium
Voice-Coil Material:
Copper
Voice-Coil Insulation:
Polyimide 220 °C rating
Voice-Coil Form:
Polyimide
Back Cover:
Black, advanced synthetic elastomer

Optional Accessories:
SMH-1 mounting hardware kit

DL18MT SPECIFICATION GRAPHICS

FIGURE 1 — DL18MT Axial Response in Typical Enclosure (8.0 ft³ tuned to 36 Hz), 1 Watt/1 Meter

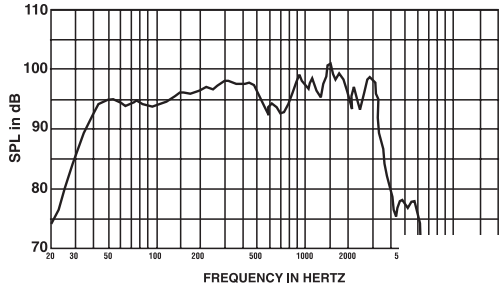

FIGURE 2 — DL18MT Frequency Response in Standard (low diffraction)Baffle (0° and 45°)

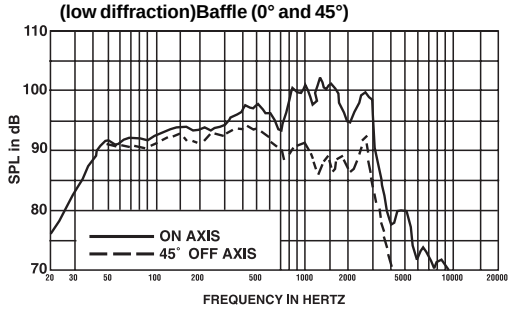

FIGURE 3 — DL18MT Impedance in Standard (low diffraction) Baffle

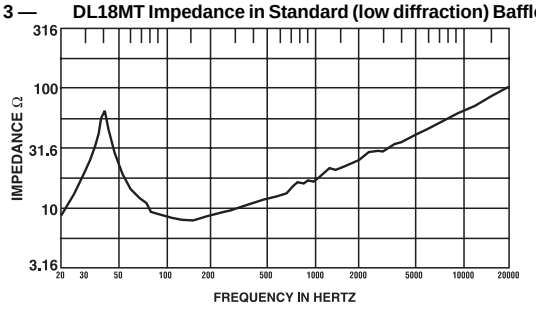

FIGURE 4 — DL18MT Impedance in Typical Enclosure (8.0 ft³ tuned to 36 Hz)

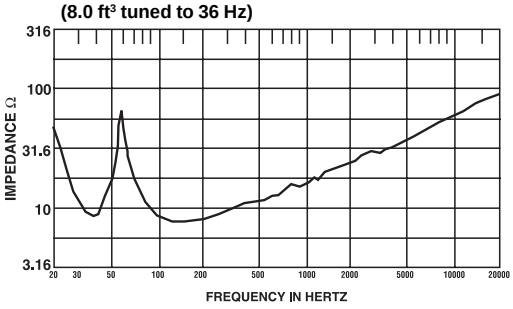

FIGURE 5 — DL18MT Dimensions

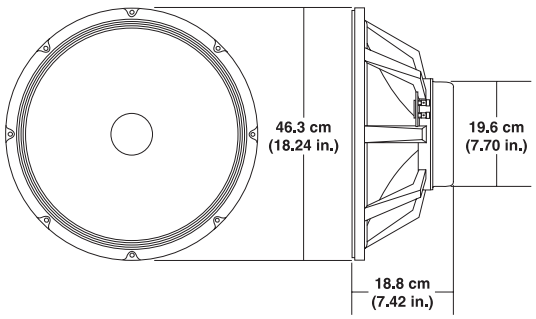

FIGURE 6 — DL18MT Distortion in Standard Baffle at 10% Rated Input Power

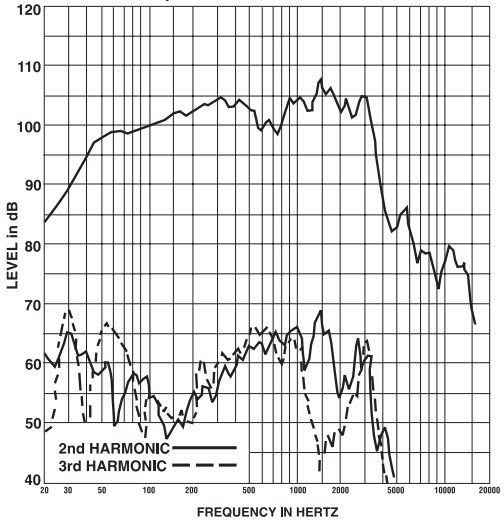

FIGURE 7 — DL18MT Beamwidth vs. Frequency (7.4 ft³ enclosure)

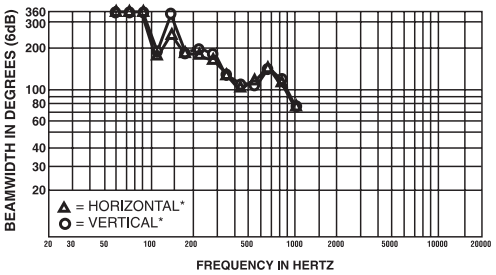

FIGURE 8 — DL18MT Directivity vs. Frequency (7.4 ft³ enclosure)

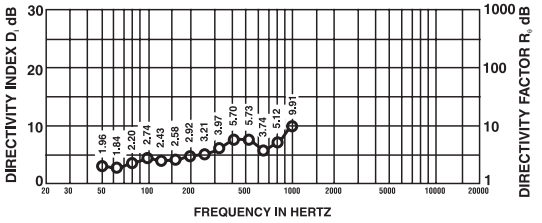

FIGURE 9 — DL18MT Polar Response (7.4 ft³ enclosure)

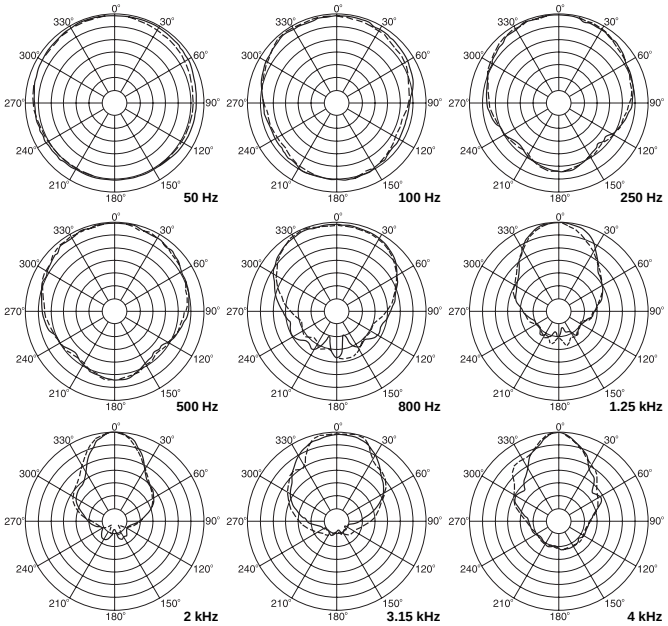

* Long enclosure axis vertical.

FIGURE 10 — DL18MT Predicted Low-Frequency Response in a Typical Enclosure (8.0 ft³ tuned to 36 Hz)

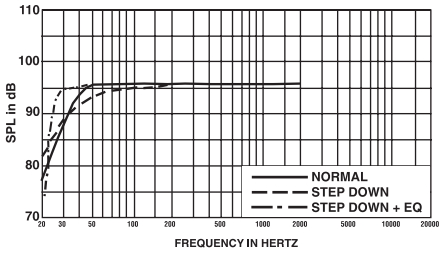

Dimensions (see Figure 5),
Outer Diameter:
463 mm (18.24 in.)
Overall Depth:
188 mm (7.42 in.)
Net Weight:
9.3 kg (20.5 lb)
Shipping Weight:
12.0 kg (26.5 lb)

DESCRIPTION

The DL18MT low-frequency reproducer is a 46.0 cm (18-inch), 8-ohm driver designed for professional high-level, high-fidelity monitoring and sound reinforcement. At the heart of this speaker is a carefully engineered drive system. Its design assures linear, low-distortion output, high power capability and efficient heat transfer.

Incorporated into the design are three exclusive Electro-Voice innovations. PROTEF™ coating (U.S. patent #4,547,632), a Teflon® - based coating, is applied to the inside diameter of the top plate.[4] Occasional violent power peaks of several seconds may expand a transducer's voice coil into contact with the top plate, causing failure. PROTEF provides protection against such failure. The coating lubricates any rubbing contact and provides electrical insulation between the coil and the steel top plate. The Thermo Inductive Ring (TIR™) and Flux Demodulation Device (FDD™), also included in the DL18MT design, are aluminum castings fastened to the pole of the magnet. They provided a shorted turn to control inductance and provide a major heat transfer path from the voice coil, which improves power handling and reduces thermal, dynamic-range compression.

The voice coil itself is constructed of edge-wound rectangular copper wire, mounted on a rugged laminated polyimide former. The complete assembly is fabricated using the most advanced epoxies, insulations and materials available.

Great care was taken in the selection of diaphragm materials and construction to ensure smooth, musical upper-bass reproduction and accurate low-frequency shock capability (punch). The cone has a moisture-repellent treatment, allowing it to be used in harsh and humid conditions. (Do not expose the cone to direct water or sunlight.)

The DL18MT is a true high-fidelity woofer in every sense, being capable of high output, low distortion and solid bass response.

This is the same woofer used in the Electro-Voice S-181 and T18 subwoofers and the world-renown MTL-4B subwoofer system.

DIRECTIONAL CHARACTERISTICS

The directional characteristics of the DL18MT in the 7.4-cubic-foot TL18-1 vented enclosure were measured in Electro-Voice's large anechoic chamber. The test signal was one-third-octave filtered pink noise centered at the frequencies indicated. A full spherical measurement system, which is completely compatible with the AcoustaCADD™ computer-aided design program, was used. All directional information was measured at 20 feet. Figure 9 illustrates the horizontal and vertical polar responses. Figure 7 shows the horizontal and vertical beamwidths. Beamwidth is the angle at which the horizontal and vertical polar responses have decreased in level by 6 dB when compared to the axial frequency response. Figure 8 illustrates the total directivity of the DL18MT. The directivity factor R_θ (Q) is the relative value, at a point, of the DL18MT when compared to an ideal spherical response. The directivity index, D_i, is calculated by the formula: $D_i = 10 \log_{10} R_\theta$.

TYPICAL AMPLIFIER SIZE

400-800 watts per woofer is the optimal amplifier size. Amplifiers of this size will allow maximum output with minimal risk of speaker damage when properly used. Smaller amplifiers can also be used with excellent results—the full capabilities of the speaker will simply not be used.

POWER-HANDLING TEST

Electro-Voice components and systems are manufactured to exacting standards, ensuring they will hold up, not only through the most rigorous of power tests, but also through continued use in arduous, real-life conditions. Two main test specifications are used: the "AES Recommended Practice for Specification of Loudspeaker Components Used in Professional Audio and Sound Reinforcement (AES2-1984/ ANSI S4.26-1984) and the "EIA Loudspeaker Power Rating Full Range" (ANSI/EIA RS-426-A 1980). Both of these specifications use noise spectrums which mimic typical music and test the thermal and mechanical capabilities of the components. Electro-Voice will support relevant additional standards as and when they become available. Extreme, in-house power tests, which push the performance boundaries of the components, are also performed and passed to ensure years of trouble-free service.

Specifically, the DL18MT passes ANSI/EIA RS-426-A 1980 with the following values:

R_{SR} = 6.9 ohms (1.15 x R_E)
P_E(max) = 400 watts
Test voltage = 52.5 volts rms,
105.0 volts peak
(+6 dB)

The DL18MT passes AES2-1984/ANSI S4.26-1984 with the following values:
Z_{MIN} = 7.1 ohms at 170 Hz
P_E(max) = 400 watts
Test voltage = 53.3 volts rms,
106.6 volts peak
(+6 dB)
Selected decade = 50-500 Hz

RESPONSE IN STANDARD BAFFLE

AES requires a large, planar baffle for this test, WHICH IS INTENDED TO SHOW SMOOTHNESS AND OFF-AXIS RESPONSE, NOT BASS RESPONSE. This has proven to be inconvenient and prohibitive, due to its size. Here, we have chosen our lab-standard, low-diffraction, 12-cubic-foot test enclosure, which will demonstrate the same characteristics as the AES standard baffle (see Figure 2). A swept-sine-wave input is used for this measurement to provide a more informative curve to the end user.

TYPICAL ENCLOSURES

The most extended bass, lowest distortion and best control is usually realized in properly designed vented enclosures. In such designs, the vent, or port, actually provides the lowest octave of output. The vent is driven to full acoustic output by a relatively small motion of the speaker cone itself, acting through the air contained within the enclosure. The excursion of the DL18MT at these frequencies is much reduced compared to sealed or open-back enclosures, directly reducing harmonic distortion and the possibility of speaker bottoming. Thiele-Small parameters are provided so designers can tailor the response to suit their needs.

Normally Tuned Enclosures

An 8-cubic-foot enclosure tuned to 36 Hz will provide unequalized response that is 3 dB down at 38 Hz and 10 dB down at 28 Hz as shown in the computer prediction illustrated in Figure 10.

Step-Down Operation

The "step-down" mode approximates a B_6 Thiele alignment. Step-down extends system low-frequency response by increasing amplifier power at certain frequencies instead of enclosure size. In step-down, the enclosure is tuned to a lower frequency than normal. This increases system output in the region of the new tuning frequency and reduces output slightly in the region of original tuning. The smoothly falling response which results can be equalized to provide a new system 3-dB-down point that is about 0.7 that of the original. To achieve a similar response extension without equalization would require an enclosure at least *twice* the size.

The equalization required is a second-order underdamped high-pass filter with a Q of 2 at the enclosure tuning frequency. This characteristic provides a boost of 6 dB at tuning and a 12-dB-per-octave roll-off below. The roll-off protects the woofer from overexcursion due to subpassband signals (see below). Note that the boost does not affect system instantaneous peak output, which is related only to the speaker's displacement ability and effective diaphragm area.

Pro Sound Facts No. 7 describes a number of step-down enclosures and the associated peak boost frequencies for most DL loudspeakers. The Electro-Voice XEQ-2 and XEQ-3 active crossover/equalizers offer step-down equalization with a variety of peak-boost frequencies, appropriate for a broad range of specific systems. XEQ-2 and XEQ-3 engineering data sheets are available from Electro-Voice.

The "step-down + EQ" performance of the DL18MT in an 8-cubic-foot enclosure as shown in Figure 10 requires a peak boost frequency of 25 Hz. This equalization is available in the Electro-Voice Dx34 digital speaker system processor or in the XEQ-3 analog crossover/equalizer/signal-delay network with a custom EQ

4. Teflon is a registered trademark of DuPont.

module made with the BMK blank module kit. (Instructions are included in the XEQ-3 engineering data sheet.) The equalization is also available in the P1250 power amplifier (use 26-Hz boost frequency).

SUBPASSBAND SPEAKER PROTECTION
Below the enclosure tuning frequency, cone excursion increases rapidly. Since acoustic output is also falling rapidly, there is no utility in driving the system with signals much below tuning frequency. While such signals may be in the program material, they are often extraneous, such as a dropped microphone. The step-down equalization described in the Step-Down Operation section provides the required protection. If step-down equalization is not used, the Electro-Voice EX-24, XEQ-2 and XEQ-3 electronic crossover/equalizers can also provide subpassband protection. The 3-dB-down points are 30 Hz (EX-24 and XEQ-2) and 16 Hz or 32 Hz (XEQ-3).

Other high-pass filters are available and one-third-octave equalizers can also be effective at providing the required protection.

USE IN MULTIPLES
Cone loudspeakers may be stacked for greater acoustic output and a narrower beamwidth. (It is assumed that all cones are operating in unison or in phase.)

At relatively low frequencies (below about 150 Hz for typical enclosures) stacking produces additional acoustic output without altering dispersion. When a common signal is applied, a 6-dB increase in maximum acoustic output is possible.

This increase occurs because the cones "mutually couple," acting as one cone with twice the area (therefore, twice the efficiency) and twice the power-handling capacity of a single cone. This mutual coupling occurs when the frequency is such that the center-to-center distance between the two woofer manifolds is less than about one-half wavelength.

MOUNTING
The DL18MT may be front- or rear-mounted against either surface of its mounting flange and requires a 422 mm (16.6 in.) diameter cutout and a 438 mm (17.25 in.) bolt circle. Normal fasteners up to 6 mm (1/4 in.) will fit through the eight holes in the frame. Front mounting is simplest using the optional SMH-1 speaker mounting kit.

ELECTRICAL CONNECTIONS
The DL18MT is fitted with a pair of plated, frame-mounted connectors with color-coded ends. Electrical connection is made by pushing down, inserting wire completely through the rectangular slot and releasing pressure. One conductor of #9 stranded, #8 AWG solid, a pair of twisted #15 AWG stranded or a pair of #14 AWG solid conductors will fit.

AES RECOMMENDED PRACTICE
The DL18MT's specifications conform to the "AES Recommended Practice for Specification of Components Used in Professional Audio and Sound Reinforcement" (AES2-1984/ ANSI S4.26-1984). This recommended practice was developed over a number of years by consultants, manufacturers and government agencies from around the world, so that the detailed performance information required in professional applications could be provided in a unified format. The recommended practice has been published in the October, 1984, issue of the *Journal of the Audio Engineering Society* (vol. 26, pp. 771-780). Individual copies of the recommended practice are available from the Audio Engineering Society, 60 East 42nd Street, New York, New York 10165, USA. Also appearing in this issue is an article which comments on the recommended practice from an engineering point of view (C.A. Henricksen, "Engineering Justifications for Selected Portions of the AES Recommended Practice for Specification of Loudspeaker Components," pp. 763-769). The comments in this article will be particularly of interest to those not involved in the day-to-day design and testing of loudspeakers.

ARCHITECTS' AND ENGINEERS' SPECIFICATIONS
The low-frequency woofer shall have a nominal diameter of 457 mm (18.0 in.), an overall depth of 188 mm (7.42 in.) and weigh less than 9.3 kg (20.5 lb). The frame shall be constructed of strong, deformation-resistant die-cast aluminum. The magnet assembly shall incorporate PROTEF™ protection, a TIR™ (Thermo Inductive Ring) and FDD™ (Flux Demodulation Device) to reduce inductive coupling and increase power handling. The cone and dust dome should withstand use in damp and humid conditions. The voice coil shall have a diameter of 64 mm (2.5 in.), a winding depth of 20.3 mm (0.8 in.) and be made of edge-wound copper ribbon. The voice-coil former shall be made of aerospace-grade polyimide laminate and bonded with high-temperature epoxy adhesives. The performance specification of a representative production unit shall be as follows: measured sensitivity (SPL at 1 m (3.3 ft) with 1 watt input, 100- to 800-Hz pink noise) shall be in excess of 95 dB. The half-space reference efficiency shall be at least 2.9%. The usable response shall be 30 to 3,000 Hz, and the nominal impedance shall be 8 ohms. The EIA rated power shall be 400 watts. The low-frequency transducer shall be the Electro-Voice DL18MT.

UNIFORM LIMITED WARRANTY
Electro-Voice products are guaranteed against malfunction due to defects in materials or workmanship for a specified period, as noted in the individual product-line statement(s) below, or in the individual product data sheet or owner's manual, beginning with the date of original purchase. If such malfunction occurs during the specified period, the product will be repaired or replaced (at our option) without charge. The product will be returned to the customer prepaid. Exclusions and Limitations: The Limited Warranty does not apply to: (a) exterior finish or appearance; (b) certain specific items described in the individual product-line statement(s) below, or in the individual product data sheet or owner's manual; (c) malfunction resulting from use or operation of the product other than as specified in the product data sheet or owner's manual; (d) malfunction resulting from misuse or abuse of the product; or (e) malfunction occurring at any time after repairs have been made to the product by anyone other than Electro-Voice or any of its authorized service representatives. **Obtaining Warranty Service:** To obtain warranty service, a customer must deliver the product, prepaid, to Electro-Voice or any of its authorized service representatives together with proof of purchase of the product in the form of a bill of sale or receipted invoice. A list of authorized service representatives is available from Electro-Voice at 600 Cecil Street, Buchanan, MI 49107 (616/ 695-6831 or 800/234-6831). **Incidental and Consequential Damages Excluded:** Product repair or replacement and return to the customer are the only remedies provided to the customer. Electro-Voice shall not be liable for any incidental or consequential damages including, without limitation, injury to persons or property or loss of use. Some states do not allow the exclusion or limitation of incidental or consequential damages so the above limitation or exclusion may not apply to you. **Other Rights:** This warranty gives you specific legal rights, and you may also have other rights which vary from state to state.

Electro-Voice Speakers and Speaker Systems are guaranteed against malfunction due to defects in materials or workmanship for a period of five (5) years from the date of original purchase. The Limited Warranty does not apply to burned voice coils or malfunctions such as cone and/or coil damage resulting from improperly designed enclosures. Electro-Voice active electronics associated with the speaker systems are guaranteed for three (3) years from the date of original purchase. Additional details are included in the Uniform Limited Warranty statement.

Service and repair address for this product: Electro-Voice, Inc., 600 Cecil Street, Buchanan, Michigan 49107 (616/695-6831 or 800/234-6831).

Specifications subject to change without notice.

ELECTRO-VOICE *a division of EVI AUDIO* 600 Cecil Street, Buchanan, Michigan 49107
MANUFACTURING PLANTS AT ■ BUCHANAN, MI ■ NEWPORT, TN ■ SEVIERVILLE, TN ■ OKLAHOMA CITY, OK ■ GANANOQUE, ONT.
© Electro-Voice, Inc. 1997 ■ Litho in U.S.A.
Part Number 532784 — 9726