DL15ST

Low-Frequency Reproducer



General Product Description

The DL15ST low/mid-frequency reproducer is a 15-inch, 8-ohm driver designed for professional high-level, high-fidelity monitoring and sound reinforcement. At the heart of this speaker is a carefully engineered drive system. Its design assures linear, low-distortion output, high power capability and efficient heat transfer.

Incorporated into the design are three exclusive Electro-Voice® innovations. PROTEF™ coating (U.S. patent #4,547,632), a Teflon®-based coating, is applied to the inside diameter of the top plate. Occasional violent power peaks of several seconds may expand a transducer's voice coil into contact with the top plate, causing failure. PROTEF™ provides protection against such failure. The coating lubricates any rubbing contact and provides electrical insulation between the coil and the steel top plate. The Thermo Inductive Ring (TIR™) and Flux Demodulation Device (FDD™), also included in the DL15ST design, are aluminum castings fastened to the pole of the magnet. They provide a shorted turn to control inductance and provide a major heat transfer path from the voice coil, which improves power handling and reduces thermal dynamic-range compression.

The voice coil itself is constructed of edge-wound rectangular aluminum wire, mounted on a rugged, laminated polyimide former. The complete assembly is low in mass and is fabricated using the most advanced epoxies, insulations and materials available.

Great care was taken in the selection of diaphragm materials and construction to ensure smooth, musical upper-bass reproduction and accurate low-frequency shock capability (punch). The cone has a moisture-repellent treatment, allowing it to be used in harsh and humid conditions. (Do not expose the cone to direct water or sunlight.)

The DL15ST is a true high-fidelity woofer in every sense, being capable of high output, low distortion and solid bass response.

Architects' and Engineers' Specifications

The low frequency woofer shall have a nominal diameter of 350 mm (15 in.), an overall depth of 165 mm (6.48 in.) and weigh less than 8.6 kg (19.6 lb). The frame shall be constructed of strong, deformation-resistant die-cast aluminum. The magnet assembly shall incorporate PROTEF™ protection, a TIR™ (Thermo Inductive Ring) and FDD™ (Flux Demodulation Device) to reduce inductive coupling and increase power handling. The cone and dust dome should withstand use in damp and humid conditions. The voice coil shall have a diameter of 63.5 mm (2.5 in.), a winding depth of 15.2 mm (0.6 in.) and be made of edge-wound aluminum ribbon. The voice-coil former shall be made of aerospace-grade polyimide laminate and bonded with high-temperature epoxy adhesives. The performance specification of a representative production unit shall be as follows: measured sensitivity (SPL at 1 m (3.3 ft) with 1 watt input, 100- to 800-Hz pink noise) shall be in excess of 98 dB. The reference efficiency shall be at least 4.63%. The usable response shall be 45 to 3,000 Hz, and the nominal impedance shall be 8 ohms. The EIA rated power shall be 400 watts. The low-frequency transducer shall be the Electro-Voice® DL15ST.

Directional Characteristics

The directional characteristics of the DL15ST in a 1.1-cubic-foot vented enclosure were measured in Electro-Voice's large anechoic chamber. The test signal was one-third-octave filtered pink noise centered at the frequencies indicated. All directional information was measured at 20 feet. Figure 1 shows the horizontal and vertical beamwidths. Beamwidth is the angle at which the horizontal and vertical polar responses have decreased in level by 6 dB when compared to the axial frequency response. Figure 2 illustrates the total directivity of the DL15ST. The directivity factor R_θ (Q) is the relative value, at a point, of the DL15ST when compared to an ideal spherical response. The directivity index, D_I, is calculated by the formula: $D_i = 10 \log_{10} R_\theta$.

Electrical Connections

The DL15ST is fitted with a pair of plated, frame mounted connectors with color-coded ends. Electrical connection is made by pushing down, inserting wire completely through the rectangular slot and releasing pressure. One conductor of #9 stranded, #8 AWG solid, a pair of twisted #15 AWG stranded or a pair of #14 AWG solid conductors will fit.

Typical Amplifier Size

400-800 watts per woofer is the optimal amplifier size. Amplifiers of this size will allow maximum output with minimal risk of speaker damage when properly used. Smaller amplifiers can also be used with excellent results.

Typical Enclosures

The most extended bass, lowest distortion and best control is usually realized in properly designed vented enclosures. In such designs, the vent, or port, actually provides the lowest octave of output. The vent is driven to full acoustic output by a relatively small motion of the speaker cone itself, acting through the air contained within the enclosure. The excursion of the DL15ST at these frequencies is much reduced compared to sealed or open-back enclosures, directly reducing harmonic distortion and the possibility of speaker bottoming. Thiele-Small parameters are provided so designers can tailor the response to suit their needs.

Normally Tuned Enclosures

A 1.8 cubic-foot enclosure tuned to 55 Hz has a smooth extended response to below 50 Hz. The 1.1 cubic-foot enclosure "bumps up" above 70 Hz but has less extended low-bass output.umps up" above 70 Hz but has less extended low-bass output.

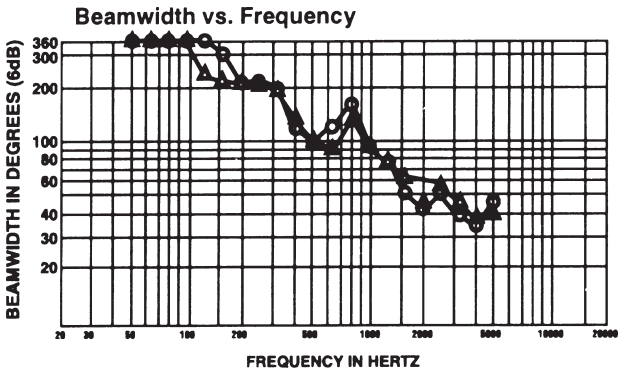

Figure 1

Electro-Voice®

Specifications:

Usable Axial Frequency Response in Typical Enclosure (4.0 ft³ tuned to 40 Hz), Swept One-Third-Octave Pink Noise, 4 Volts at 10 Feet, Anechoic Environment, Normalized for 1 Watt/1 Meter : ..... 45-3,000 Hz

Power Handling Per ANSI/EIA RS-426-A 1980: ..... 400 watts

Per AES2-1984/ANSI S4.26-1984,

50-500 Hz: ..... 400 watts
100-1,000 Hz: ..... 500 watts

Sensitivity (SPL at 1 m, 1 watt input power, nominal impedance),

200-3,000-Hz Average: ..... 101 dB
100-800-Hz Average: ..... 98 dB

Impedance Response:

Minimum (Zmin): ..... 6.5 ohms at 230 Hz
Nominal: ..... 8 ohms

Distortion Response (on axis in standard baffle, 10% rated input power:

Second Harmonic:

100 Hz: ..... -21 dB (8.9 %)
1,000 Hz: ..... -38 dB (1.3 %)

Third Harmonic:

100 Hz: ..... -31 dB (2.8 %)
1,000 Hz: ..... -40 dB (1.0 %)

Beamwidth (angle included by 6-dB-down points on polar responses for octave bands of pink noise):

500 Hz: ..... 80°
1,000 Hz: ..... 80°
2,000 Hz: ..... 60°

Physical Constants,

Effective Piston Diameter: ..... 330.0 mm (10.5 in.)
Moving Mass (M_{Mo}): ..... 0.062 kg (0.137 lb)
Voice-Coil Winding Depth: ..... 15.2 mm (0.6 in.)
Voice-Coil Diameter: ..... 63.5 mm (2.5 in.)
Voice-Coil Winding Length: ..... 18.1 m (59.4 ft)
Top Plate Thickness at Voice Coil: ..... 10.9 mm (0.43 in.)
BL Factor: ..... 20 tesla meter

Thiele-Small Parameters (broken in),

f_S : ..... 42 Hz
V_{AS}: ..... 195 liters (6.89 ft³)
Q_{ES}: 0.30
O_{MS}: 4.55
Q_{TS}: 0.28
R_E: ..... 6.0 ohms
η_0: 4.63%
S_D: ..... 0.086m² (132 in.²)
M_{MD}: ..... 0.062 kg (0.137 lb)
L_E : 1.6mH
C_{MS}: ..... .0.19 mm/N
R_{MS}: ..... 4.43 mechanical ohms
P_E(max) (per ANSI/EIA RS-426-A 1980): ..... 400 watts
X_{MAX}[1]: ..... 4.1 mm (0.16 in.)
X_{lim}[2]: ..... 12.7 mm (0.50 in.)
V_D (S_D x X_{MAX}): ..... 3.35 liters (0.012 ft³)

Typical Vented Enclosures:

4.0 ft³ tuned to 40 Hz or 6.0 ft³ tuned to 35 Hz

Additional Descriptive Information,

Magnet Weight: ..... 2.2 kg (4.9 lb)
Magnet Material: ..... Barium ferrite
Frame: ..... Cast aluminum
Frame Finish: ..... Textured black epoxy
Plating of Steel Parts: ..... Bright Cadmium
Voice-Coil Material: ..... Aluminum
Voice-Coil Insulation: ..... Polyimide 220°C rating
Voice-Coil Form: ..... Polyimide
Back Cover: ..... Black, advanced synthetic elastomer

Net Weight: ..... 8.6 kg (19.0 lb)

Optional Accessories:

SMH-1 mounting hardware kit

1. X_{max} is the one-way peak excursion which produces 10% THD of the current waveform when driven at f_s.
2. Displacement limit is the one-way peak excursion which, when exceeded, will cause physical damage to the drive mechanism.

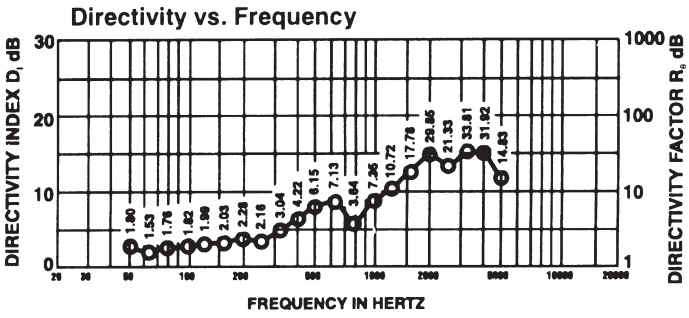

Figure 2

Dimensions: (in)	
A	15.13
B	0.585
C	7.70
D	0.50
E	6.48
F	14.60
G	0.28 x 8

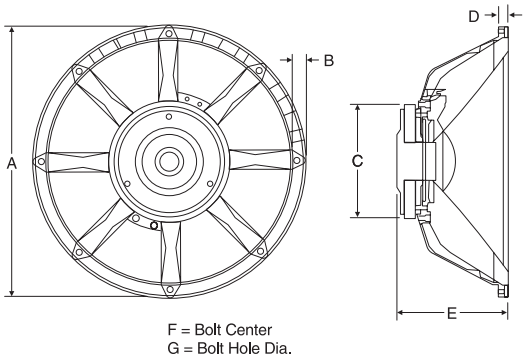

Dimensions

USA 12000 Portland Ave South, Burnsville, MN 55337, Phone: 952-884-4051, FAX: 952-884-0043
Canada 705 Progress Avenue, Unit 46,Scarborough, Ontario, Canada, M1H2X1,Phone: 416-431-4975, 800-881-1685, FAX: 416-431-4588
Germany Hirschberger Ring 45, D94315, Straubing, Germany, Phone: 49 9421-706 0, FAX: 49 9421-706 287
France Parc de Courcerin, Alle Lech Walesa, Lognes, 77185 Marne La Vallee, France, Phone: 33/1-6480-0090, FAX: 33/1-6480-4538
Australia Unit 23, Block C, Slough Business Park, Slough Avenue, Silverwater, N.S.W. 2128, Australia, Phone: 61/2-9648-3455, FAX: 61/2-9648-5585
Hong Kong Unit E & F, 21/F, Luk Hop Industrial Bldg., 8 Luk Hop St., San PO Kong, Kowloon, Hong Kong, Phone: 852-2351-3628, FAX: 852-2351-3329
Japan 5-3-8 Funabashi, Setagaya-ku, Tokyo, 156-0055 Japan, Phone: +81 (0) 3-5316-5020, FAX: +81 (0) 3-5316-5031
Singapore 3015A Ubi Rd 1, 05-10, Kampong Ubi Industrial Estate, Singapore 408705, Phone: 65-746-8760, FAX: 65-746-1206
Mexico Av. Parque Chapultepec #66-201, Col. El. Parque Edo. Mex. 53390, Phone: (52) 5358-5434, FAX: (52) 5358-5588
UK 4, The Willows Centre, Willow Lane, Mitcham, Surrey CR4 4NX, UK, Phone: 44 181 640 9600, FAX: 44 181 646 7084
Africa, Mid-East 12000 Portland Ave South, Burnsville, MN 55337, Phone: 952-887-7424, FAX: 952-887-9212
Latin America 12000 Portland Ave South, Burnsville, MN 55337, Phone: 952-887-7491, FAX: 952-887-9212

www.electrovoice.com • Telex Communications, Inc. • www.telex.com

© Telex Communications, Inc. 02/2001

Part Number 38109-947 Rev A

Electro-Voice®

U.S.A. and Canada only.
For customer orders, contact the Customer Service department at 800/392-3497 Fax: 800/955-6831
For warranty repair or service information, contact the Service Repair department at 800/685-2606
For technical assistance, contact Technical Support at 866/78AUDIO
Please refer to the Engineering Data Sheet for warranty information.
Specifications subject to change without notice.