Electronique & Spectacle
Jérôme Barbé
53 rue des Batignolles
75017 Paris
tel : 01 42 63 06 66
electronique-spectacle.com

DJR400 Peak meter

output level with this setting of pots

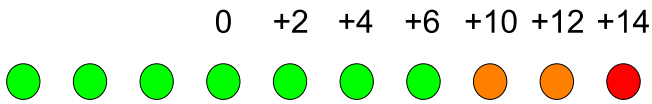

FX return level

0 dB in (775 mV)

0 dB out (775 mV)
master / booth RCA
overload @ + 20 dB

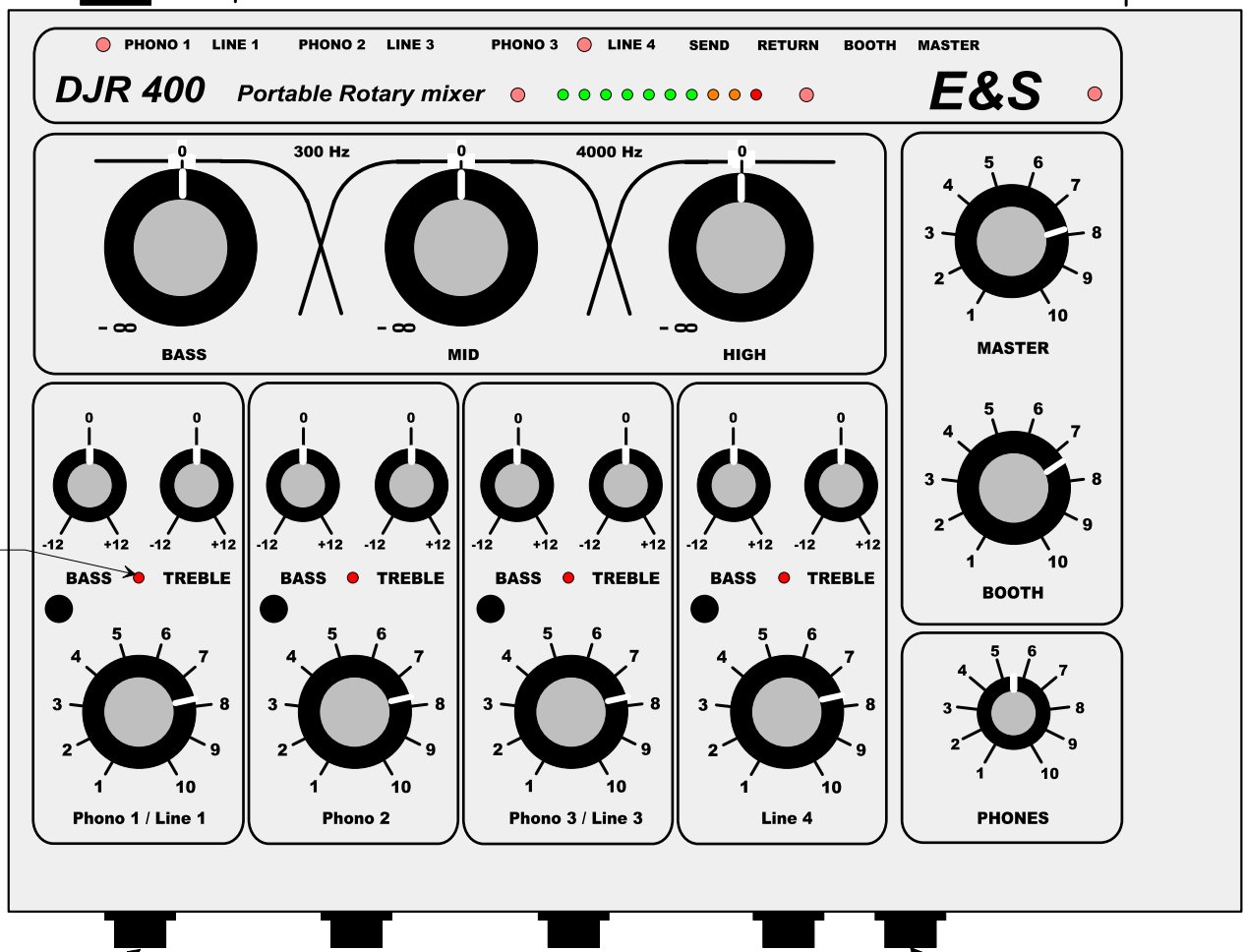

cue leds

FX send level

cue/mix

Isolator Potentiometer curve

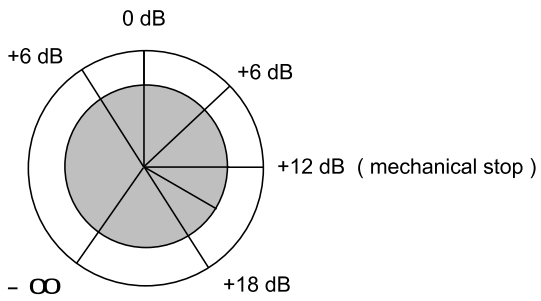

Channel Potentiometer curve

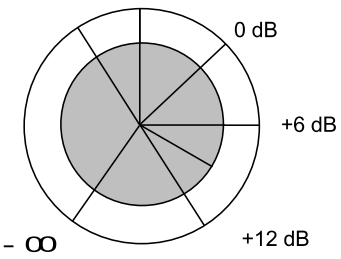

Be very careful to not send Phantom Power to XLR outputs
This 48V would destroy output stage of the DJR

DJR400 Installation

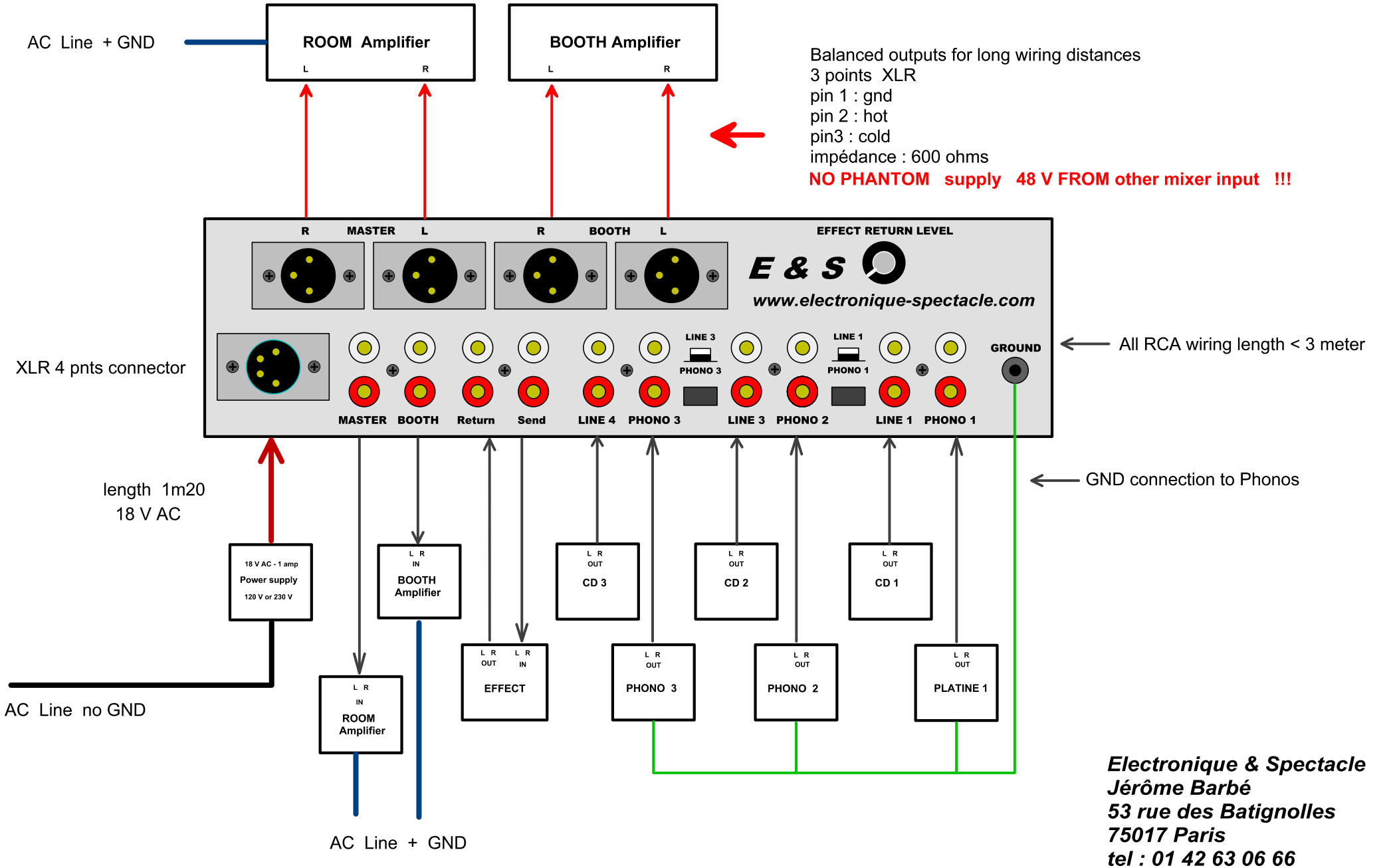

Electronique & Spectacle
Jérôme Barbé
53 rue des Batignolles
75017 Paris
tel : 01 42 63 06 66
electronique-spectacle.com

E&S DJR 400 FILTERS

Tone control Baxandall

Each Channel

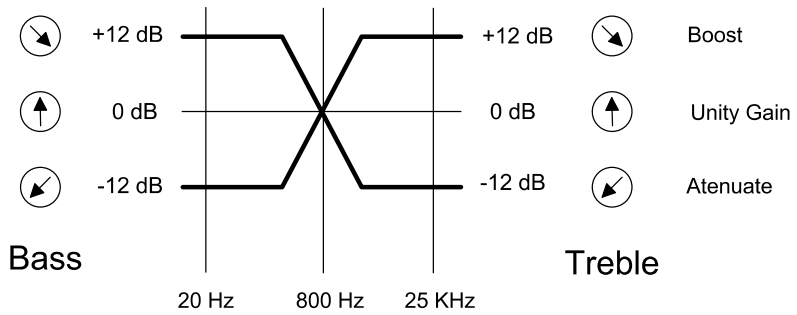

3 Band Isolator

Master output

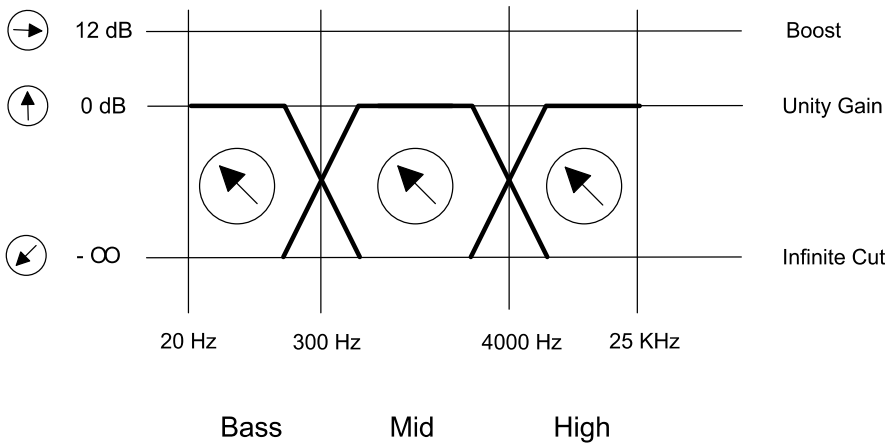

Electronique & Spectacle
Jérôme Barbé
53 rue des Batignolles
75017 Paris
tel : 01 42 63 06 66
electronique-spectacle.com

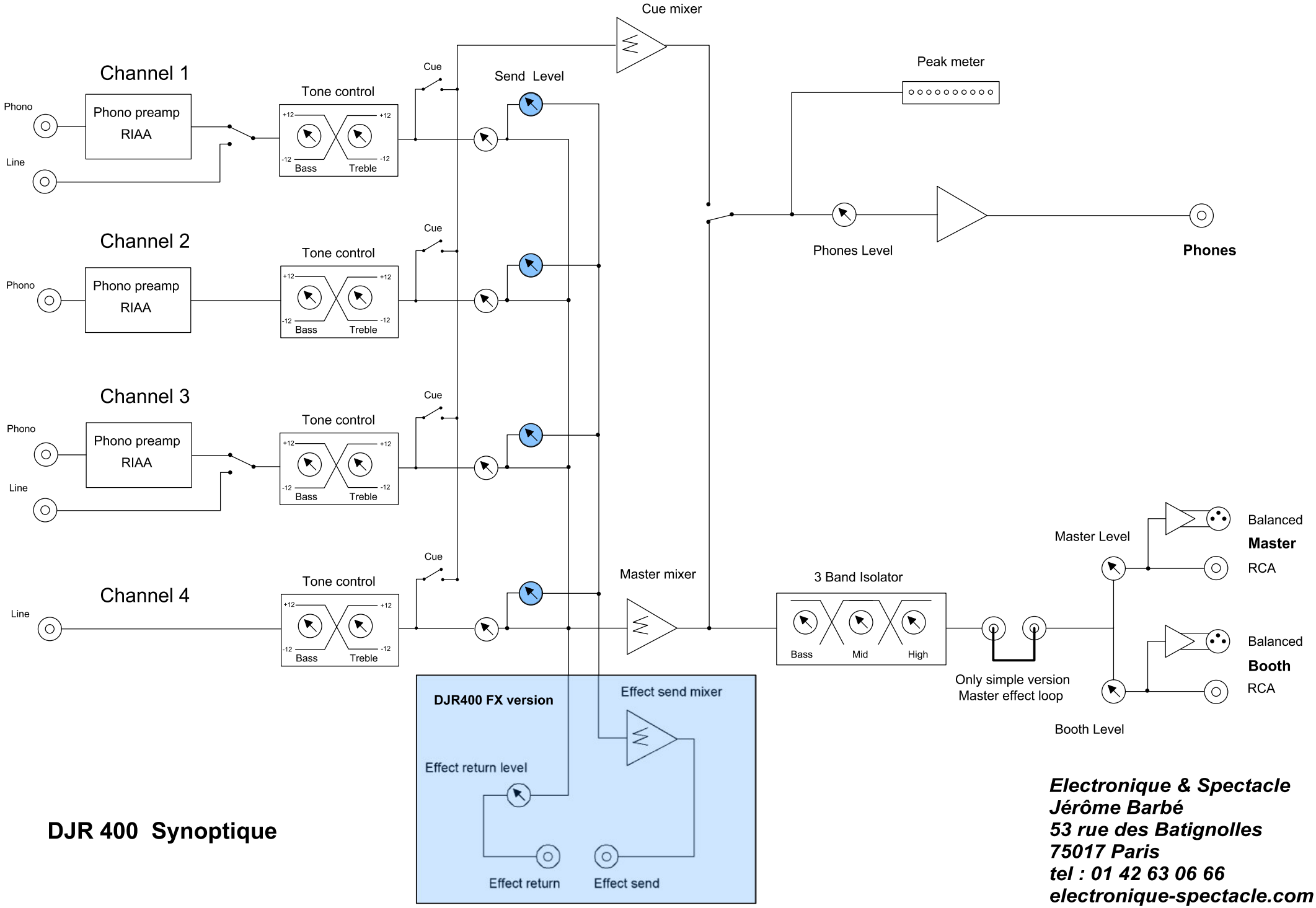

DJR 400 Synoptique

Electronique & Spectacle
Jérôme Barbé
53 rue des Batignolles
75017 Paris
tel : 01 42 63 06 66
electronique-spectacle.com

DJR 400 Master - Booth Outputs

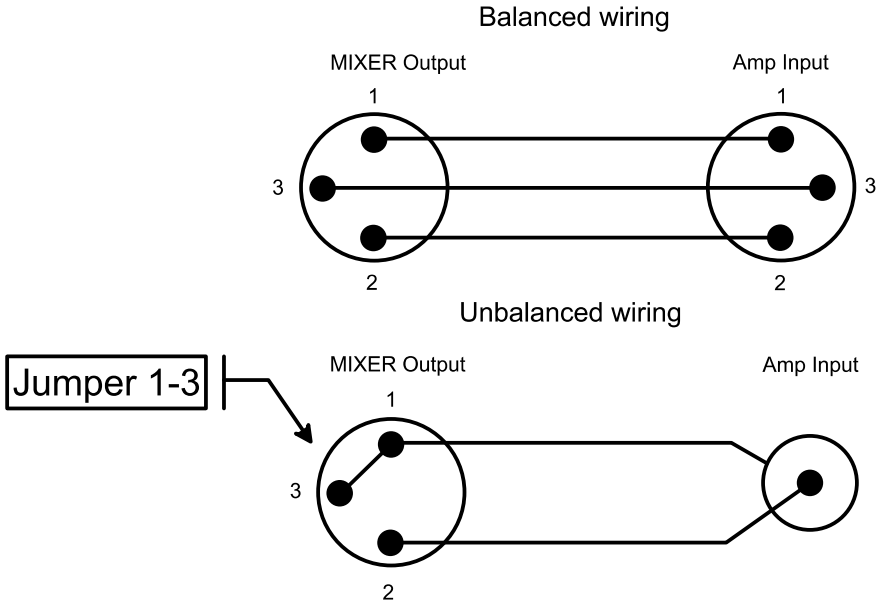

Be very careful to not send Phantom Power to XLR outputs
This 48V would destroy output stage of the DJR

DJR 400 Headphone mono wiring

CAUTION !!! : Adjust headphone sound to the proper volume. Loud sound may damage your ears

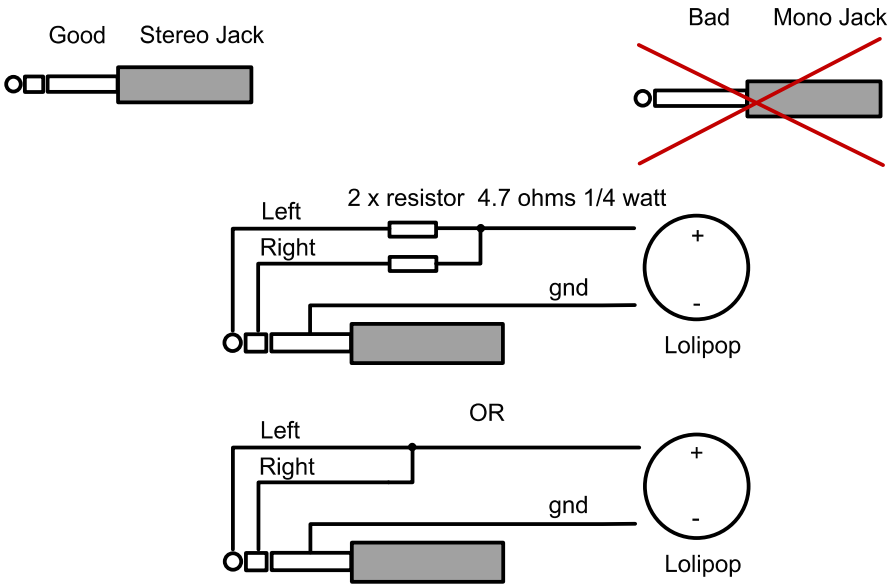

USER-INSTALLER CAUTION :

Power Sources This product should be operated only from the type of power source indicated on the marking label. If you are not sure of the type of power supply to your home consult your appliance dealer or local power company

Use it under the following environmental conditions:
Temperature: 0°C - 40°C (32°F-104°F)
Humidity: 30% - 85% (No condensation)

Avoid heavy shocks or dropping, hitting or any other type of strong impact

Never inspect the inside or remodel this machine, if the customer remodels this machine E&S will no longer guarantee its performance