digisound

MODULE 80-4
VOLTAGE CONTROLLED MIXER

1. INTRODUCTION

The DIGISOUND 80-4 Voltage Controlled Mixer (VCM) provides proportional (linear) mixing of up to four input signals and has a master gain control so as to be able to maintain its output at a level compatible with other modules in the series. The peak output is visually indicated by a LED. The combined output may be panned between two outputs termed 'left' and 'right'.

The design is based on three CEM 3330 Dual Voltage Controlled Amplifiers in order to facilitate voltage control of the functions of the VCM as well as ensuring exceptionally low noise.

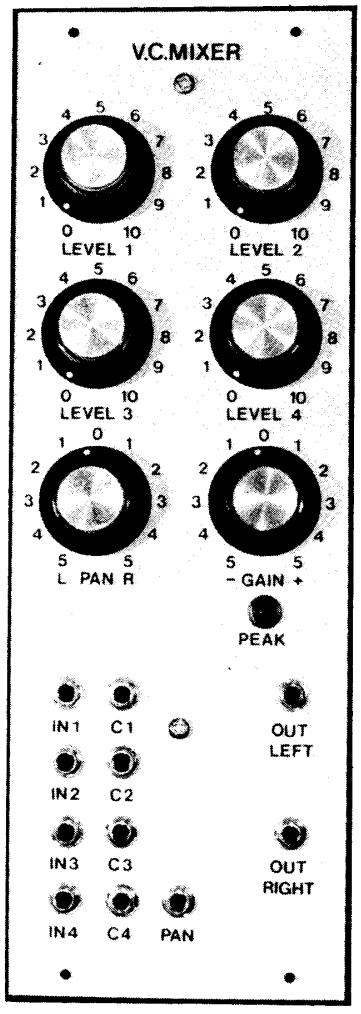

FIGURE 1. 80-4 PANEL

Figure 1 illustrates the panel lay-out of the VCM. The four signal inputs are marked 'IN 1' to 'IN 4' and the input signals may be up to +/-10V. The module is DC coupled. The signals may be mixed manually using the potentiometers marked 'LEVEL 1' to 'LEVEL 4' and their action is linear, that is, when set mid-way the signal level to the mixing stage is 50%. Additionally, however, each input may be varied by an external control voltage applied to the inputs marked 'C1' to 'C4' and a voltage of 0 to +10V will vary the level between 0 and 100%. In effect, therefore, the four channels respond in the same manner as four independent VCA's (voltage controlled amplifiers) and the control source may be low frequency oscillators for modulating any, or all, of the inputs or one may use envelope generators to switch channels on and off in a controlled manner. This makes the 80-4 VCM an extremely versatile module - see Section 4. After mixing, the 'GAIN' control allows the gain of the combined signals to be increased by a factor 5 or attentuated by a factor of 6.25. The 'PEAK` LED will iilluminate when the combined signal going to the final stage reaches about +10V. The combined signal may be manually panned between the left and right outputs. The signal may also be panned automatically by applying a +10V control signal to the 'PAN' socket. If only one output channel is used then the output of the mixer may be faded manually or automatically by using these pan controls.

These construction notes relate to PCB's marked DIGISOUND 80-4A which has some slight modifications compared to the original 80-4. The main change is an improved method of compensating the linear control inputs of the CEM 3330 although this does not affect performance of the original version. The other changes may be applied to the original version and are passive component changes to: (1) improve voltage control feedthrough when modulating the inputs; and (2) an increase in the gain factor to allow for attenuation of filtered signals.

2. DESIGN

The CEM 3330 contains two voltage controlled amplifiers each of which consists of a variable gain cell and a log converter. The gain cell is the current-in, current-out type and has simultaneous linear and exponential controls. The log converter generates the logarithm of the linear control input current while the exponential control input is transmitted unchanged to its output.

Reference to the circuit diagram shown in Figure 3 and pins 1 to 9 of IC1 (refer also to the block diagram of the CEM 3330 in Figure 2) illustrate the basic principle of the design as well as some of the features of the CEM 3330. The signal input (pin 4) is a summing node and can, therefore, accept multiple inputs. In the VCM application where we require independent control over each input only one input has been provided and with R2 = 100k the signal level should be kept to within +/-10V. R3 and C7 are compensation components and the diode, D1, is to avoid latch-up. R1 connected to +15V provides a reference current to the gain cell and this current should be limited to 100uA for best linearity. The design is based on proportional mixing of up to four signals and thus the linear control input is used to independently control the gain of each signal input. Again this is a summing node input at pin 7 which allows manual control of gain via RV1 and R6 or external control via R5 without using additional summing stages. By using a 150k resistor for R6 the control pot can be wired to the +15V supply and provide the same gain as a +10V external control signal applied to the 100k resistor, R5. C8 is provided to stabilise the log converter. This latter method of compensation should be used in place of the 1k0 and 10nF network (at pin 7) shown in the data sheet for the CEM 3330 although in this application the previous method is satisfactory. C9 is for compensation of the gain cell. A master gain control is obtained by injecting a small voltage into the exponential control input (pin 6). This voltage is derived from RV5, R31 and R32 and is common to the four input stages.

For very critical applications the CEM 3330 may be trimmed for lowest

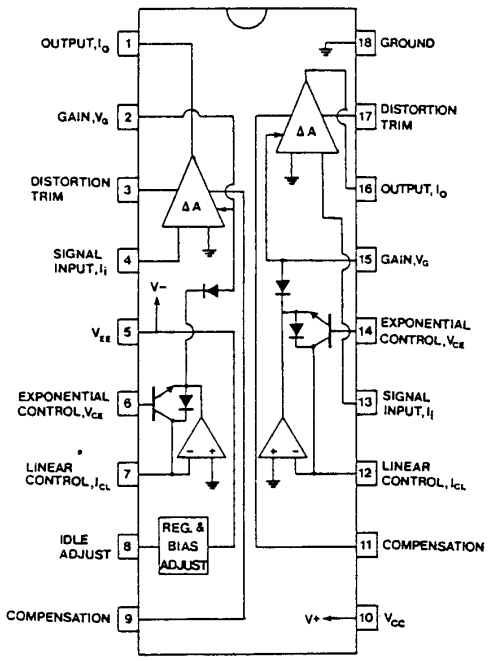

FIGURE 2. CEM 3330 IC

distortion and control voltage feedthrough. Without trimming these two factors are opposing one another but for a mixer application a good balance may be achieved by varying the operating point of the amplifiers. This is a unique feature of this VCA and is achieved by varying the quiescent standby current of the signal carrying transistors by placing a resistor between the I_{EE} pin (pin 5) and the idle current adjust pin (pin 8). In this application the amplifiers are run Class B with a 15k resistor (R4) providing a standby current of about 3uA. The CEM 3330 requires a current limiting resistor when operated from negative supplies greater than -7V5 and this is provided by R7 which is the correct value for a -15V supply with the idle current employed.

The four signal input (and control stages) are identical and their output currents are summed at IC3 and converted to a voltage across R30. This voltage is applied to TR1 which is turned on when the peak output voltage is about 9V5, which is set by the voltage divider R25 and R26. TR2 is also turned on when this peak voltage is reached and the LED (D7) will then light up. At constant amplitude high frequency the LED will tend to glow dimly while intermittent peak voltages are clearly indicated.

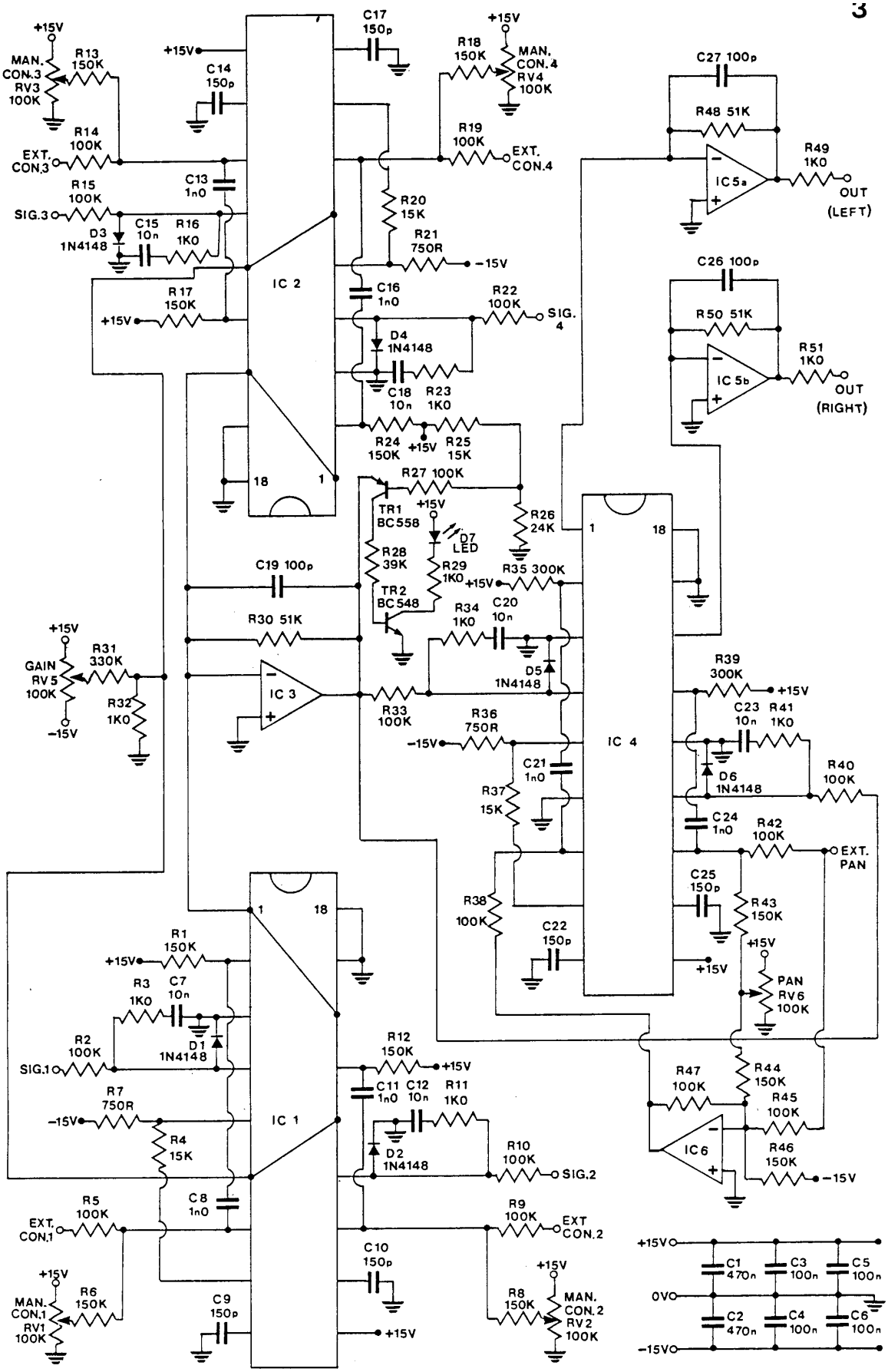

FIGURE 3. CIRCUIT DIAGRAM OF 80-4A VCM

The output voltage from IC3 also goes to both VCA's in IC4 which is configured in a similar manner to IC's 1 and 2 except that their exponential inputs (pins 6 and 14) are grounded. The amplifiers and associated op amps (IC5a and IC5b) are set to unity gain when a +10V control voltage is applied to R38 or R42. The panning effect is obtained through IC6 and associated components which provide a +10V output with zero volts at R42, or when RV6 is fully clockwise. Thus when using a +10V control voltage for panning then RV6 should be fully anti-clockwise. The left and right outputs are obtained by converting the current to a voltage across resistors R48 and R50 respectively. The use of IC5 provides low impedance outputs.

3. CONSTRUCTION

The 80-4A PCB is printed with a component overlay which aids the construction stage. The overlay is reproduced in Figure 4 to allow checking of component placement after the module has been completed.

The usual approach to soldering components onto a PCB is selecting them by increasing height. For example, start with wire links, followed by resistors then DIL sockets and so on. This approach is recommended with the 80-4A and after the DIL sockets have been installed it is worth inserting the IC's since the close proximity of capacitors to the sockets makes their insertion more difficult unless an IC insertion tool is used. The difficulty is aggravated by the fact that most IC's are supplied with their pins splayed outwards. Once the pins are vertical then there is little difficulty in inserting and removing the IC's and so if required the IC's may be removed again while the rest of the PCB is being constructed.

Take particular care with the orientation of the IC's, the diodes and the transistors. For the IC's note that IC2 is orientated opposite to that of all other IC's. The reason for this is evident from the circuit diagram which illustrates that this orientation makes the current paths from IC1 and IC2 to IC3 shortest so avoiding noise pick-up. Even after the DIL sockets have been installed the number '1', denoting pin 1, will still be visible on the PCB. For the diodes a band (line) is shown on the PCB overlay either before or after the diode number and this band indicates that the band on the diode, denoting its cathode, should be towards the hole nearest the band on the PCB. The transistors should be orientated in accordance with the shape printed on the overlay. In any event compare the completed PCB against Figure 4 before applying power to the module. Also before powering up check that the five

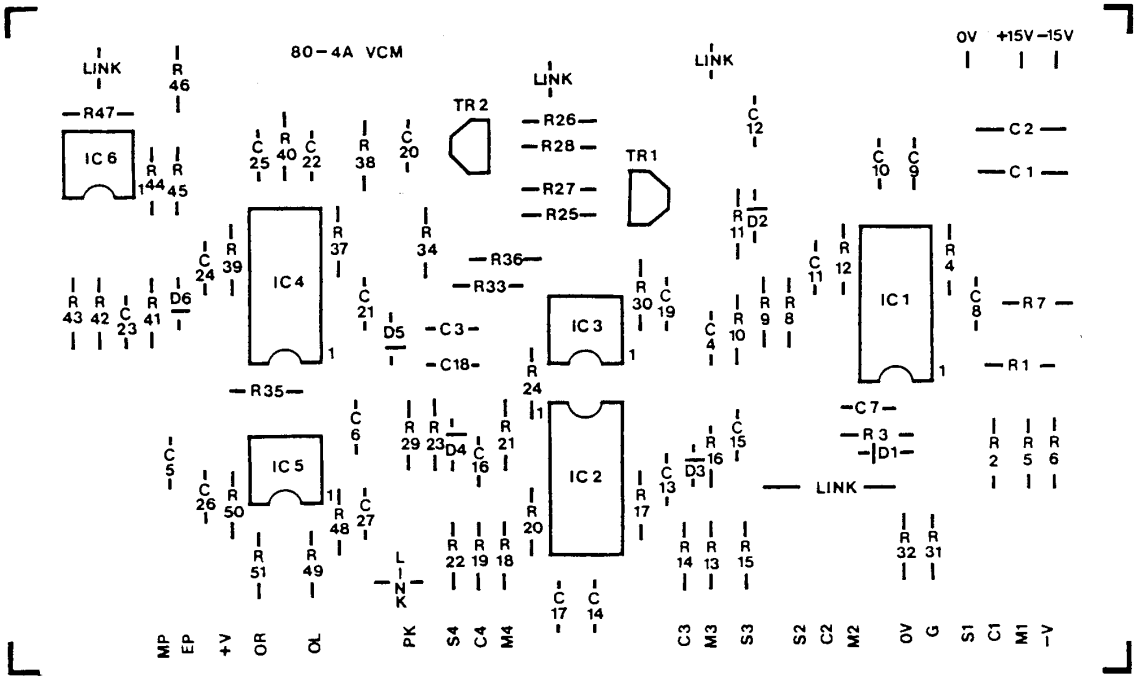

FIGURE 4. 80-4A COMPONENT OVERLAY

wire links have been made (uninsulated wire may be used for these) and inspect the foil side of the PCB for solder bridges and suspect joints.

The panel wiring is illustrated in Figure 5 and this diagram illustrates the components when viewed from the rear of the panel. The arrows and associated letters indicate that a wire connection must be made from the position shown to the front edge of the PCB which has corresponding letters. The long lead of the LED is connected to the +15V line.

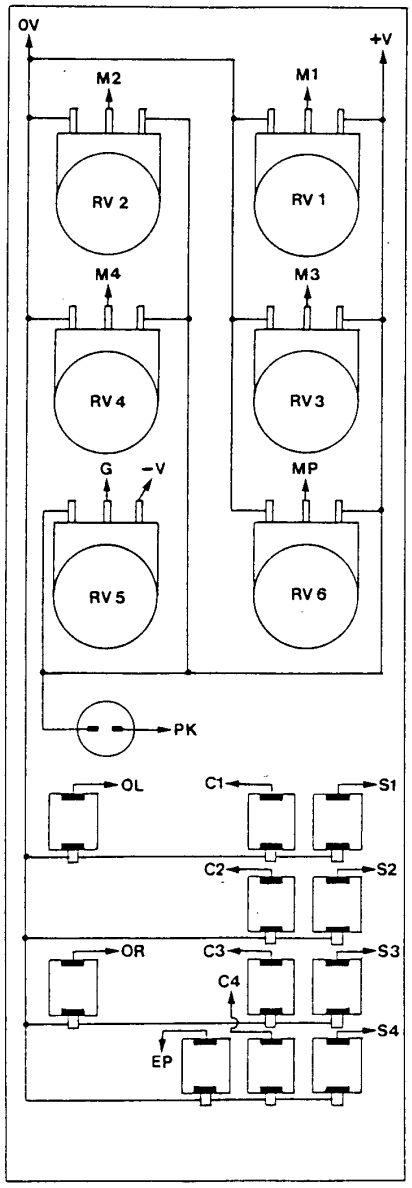

FIGURE 5. PANEL WIRING

The jack sockets illustrated in Figure 5 are of the type supplied by Digisound Limited. The top connector, as shown, is the connection which is made with the jack plug when the latter is inserted. The lower connection is disabled by insertion of a jack plug. Finally, the tab under the socket is the ground connection. It is recommended that all of these ground connections are wired together and taken to the 0V connection on the PCB since this facilitates connection of the module to other equipment which may be operating from a separate power supply. The ground tabs may be soldered together using tinned copper wire but other panel wiring should be made with insulated wire. 1/0.6mm insulated wire is ideal for panel wiring since it retains any shaping and so allows a neat appearance to be obtained. Wires between panel components and PCB should be kept as short as possible.

No adjustments are needed for the 80-4 VCM and after carefully checking construction the unit simply requires to be connected to a +/-15V supply.

4. USING

The DIGISOUND 80-4 Voltage Controlled Mixer is extremely versatile as will be evident from study of the 'Using the Digisound 80 Modular Synthesiser' manual. To give a taste of its applications some of the uses listed in the original constuction article are given below.

A. A simplistic view would be to consider the mixer as four voltage controlled amplifiers with a common output. One technique often applied to a VCA is amplitude modulation (tremolo). Usually, however, the VCA is one of the last stages and if a number of signals have been combined in a conventional mixer prior to the VCA then the total signal has to be amplitude modulated. Using the VCM one may choose which signals are to be modulated and this selected modulation can be far more pleasing.

B. One of the early works with a synthesiser was Morton Subotnick's "The Wild Bull", recorded in 1968. In this work extensive use is made of a sawtooth waveform which is separated into four octave bands (two 80-16 modules would allow this) to provide signals for a four-channel voltage

controlled mixer. Each channel was controlled by an ADSR envelope generator gated from a sequencer. This arrangement allows the separate timbral characteristics of any sound to be independently treated. Furthermore by varying the speed of the sequencer the characteristics of the sound can be made to vary widely, for example, as the rate is increased the four bands begin to sound simultaneously. Only a simple digital sequencer is required for the above and the VCM becomes the heart of a useful music making instrument within the body of the synthesiser.

C. The 80-4 is very suitable for exploring both additive and subtractive synthesis. For example, in the simplest of cases, the addition or subtraction of the sinewave output from an 80-2 VCO to another waveform in order to boost or remove (reduce) the fundamental.

D. Another useful application of the VCM is to alter loudness and harmonic content in relation to pitch. One of the criticisms of 'live' electronic music is the precise nature of its sounds and the initial excitement of a 'new' sound turns to boredom as the brain reacts adversely to its repetitive nature. By applying the keyboard control voltage (or its inverse, or a proportion of either) to one or more of the mixer control inputs then the amplitude or harmonic content (often both) will vary with pitch and so provide a useful means of dynamically altering the timbral characteristics of the sound.

E. Applying a low frequency waveform to the pan control input can produce some interesting effects but for greatest impact this technique should be used sparingly.

As inferred earlier more information on most of these techniques will be found in the User's Manual.

5. COMPONENTS

RESISTORS, 5%, 1/4w, carbon film	
R2,5,9,10,14,15,19,22,27,33,40	100k
R3,11,16,23,29,32,34,41,49,51	1k0
R4,20,25,37	15k
R6,8,13,18	150k
R7,21,36	750R
R26	24k
R28	39k
R30,48,50	51k
R31	330k
RESISTORS, 1%, 1/4w, metal film	
R1,12,17,24,43,44,46	150k
R35,39	300k
R38,42,45,47	100k
POTENTIOMETERS	
RV1,2,3,4,5,6	100k lin.
CAPACITORS	
C1,2	470n polyester
C3,4,5,6	100n polyester
C7,12,15,18,20,23	10n polyester
C8,11,13,16,21,24	1n0 polycarbonate*
C9,10,14,17,22,25	150p polycarbonate*
C19,26,27	100p polycarbonate*
* may be replaced by axial polystyrene	
SEMICONDUCTORS	
IC1,2,4	CEM 3330
IC3	TL 081
IC5	TL 082
IC6	LM 741
TR1	BC 558
TR2	BC 548
D1,2,3,4,5,6	1N4148
D7	5mm Red LED

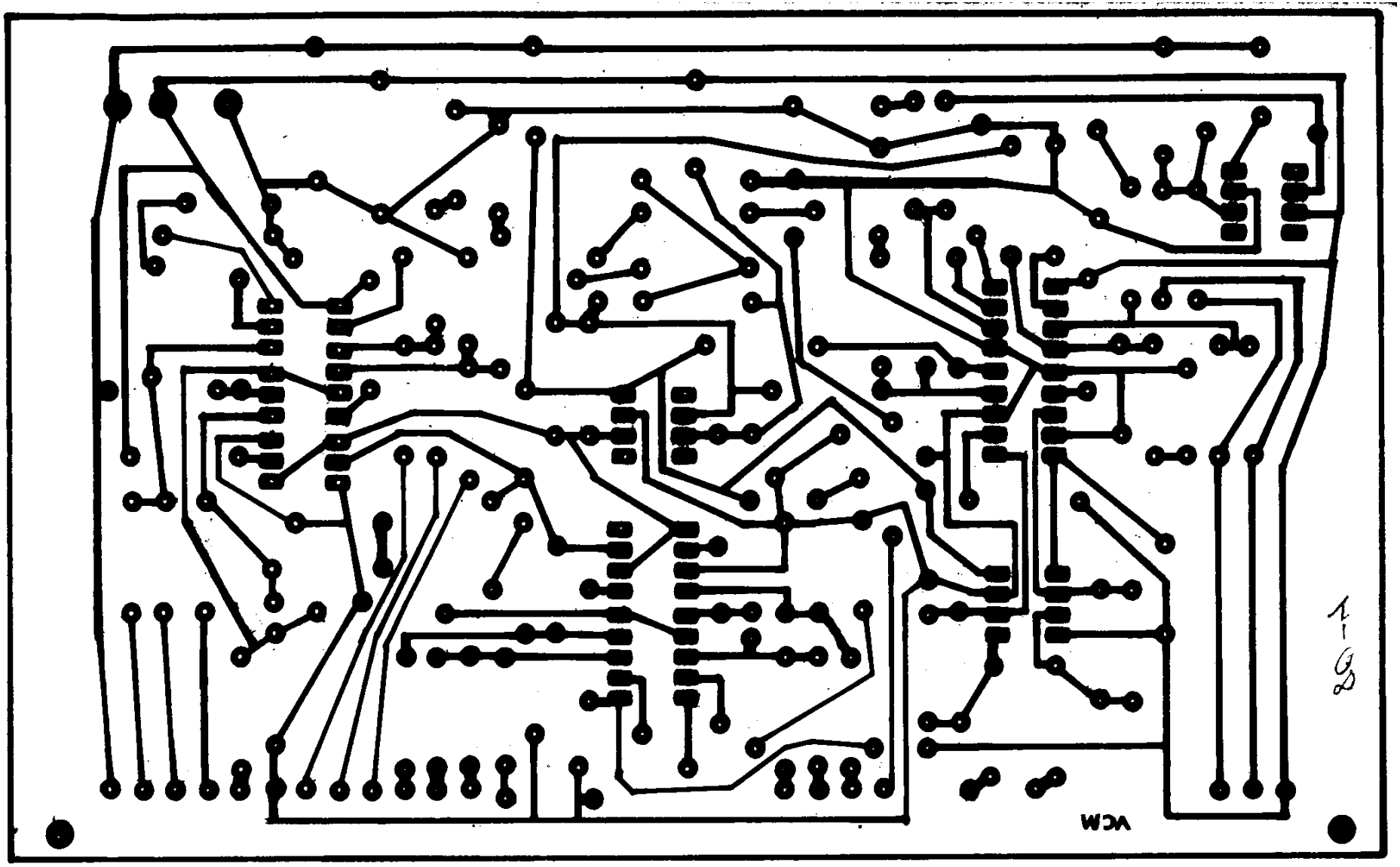

Fig 2