digisound

MODULE 80-21

VOLTAGE CONTROLLED DIGITAL OSCILLATOR

1. INTRODUCTION

A conventional VCO can produce several waveforms, rich in harmonics, which may be filtered in order to alter the timbres. This is quite satisfactory for a wide range of musical requirements but the small range of waveforms available (usually sawtooth, square and triangle) and the coarse effects of analogue filters mean that it is impossible to produce many of the delicate, natural sounds which are so characteristic of modern digital synthesis. This module adds some exciting new possibilities to existing synthesisers by combining the flexibility of analogue voltage control with the clarity and realism of digitally generated waveforms.

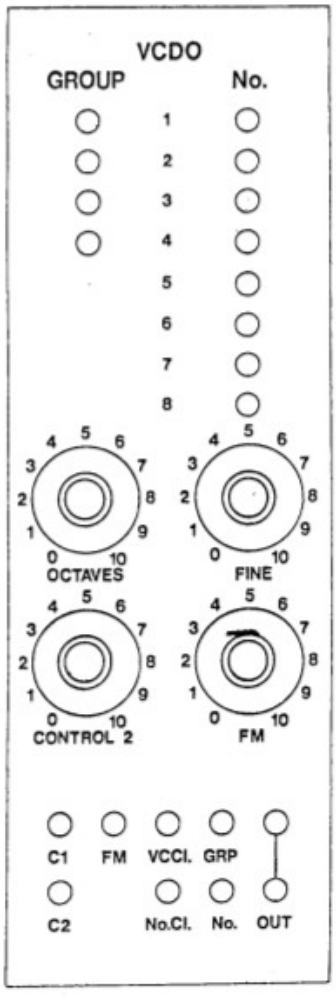

FIGURE 1. 80-21 PANEL LAY-OUT

As a unit, the voltage-controlled digital oscillator (VCDO) may be regarded as an ordinary VCO, but with a far greater range of waveforms. The design is fully compatible with existing synthesiser systems (1V/octave frequency control, 10V peak-to-peak output, linear and exponential modulation inputs) and offers the versatility of 32 different waveforms covering a wide variety of sound textures. A particular waveform can be selected either with push-button switches using a simple incremental system or by a combination of a push-button switch and suitable electronic pulses to the input provided. The module has a wide frequency range (approximately 30Hz - 10kHz) which allows it to be used as either an audio or modulation source.

2. DESIGN

The VCDO works on a very simple principle. The 32 waveforms are encoded in a 2716 EPROM with each waveform being represented as a series of 64 8-bit numbers (a wavetable). A binary counter is made to step through the waveform data at a frequency controlled by a VCO and each item of data is subsequently converted into an analogue voltage by a simple 8-bit DAC.

The complete circuit diagram for the 80-21 VCDO is shown in Figure 2. IC 1 is a CEM 3340, which with the addition of a few external resistors and capacitors functions as a high quality VCO, featuring accurate exponential and linear control of frequency. Manual control of frequency is possible by means of potentiometers RV6 and RV7, providing coarse and fine adjustment respectively. External voltage control of frequency is

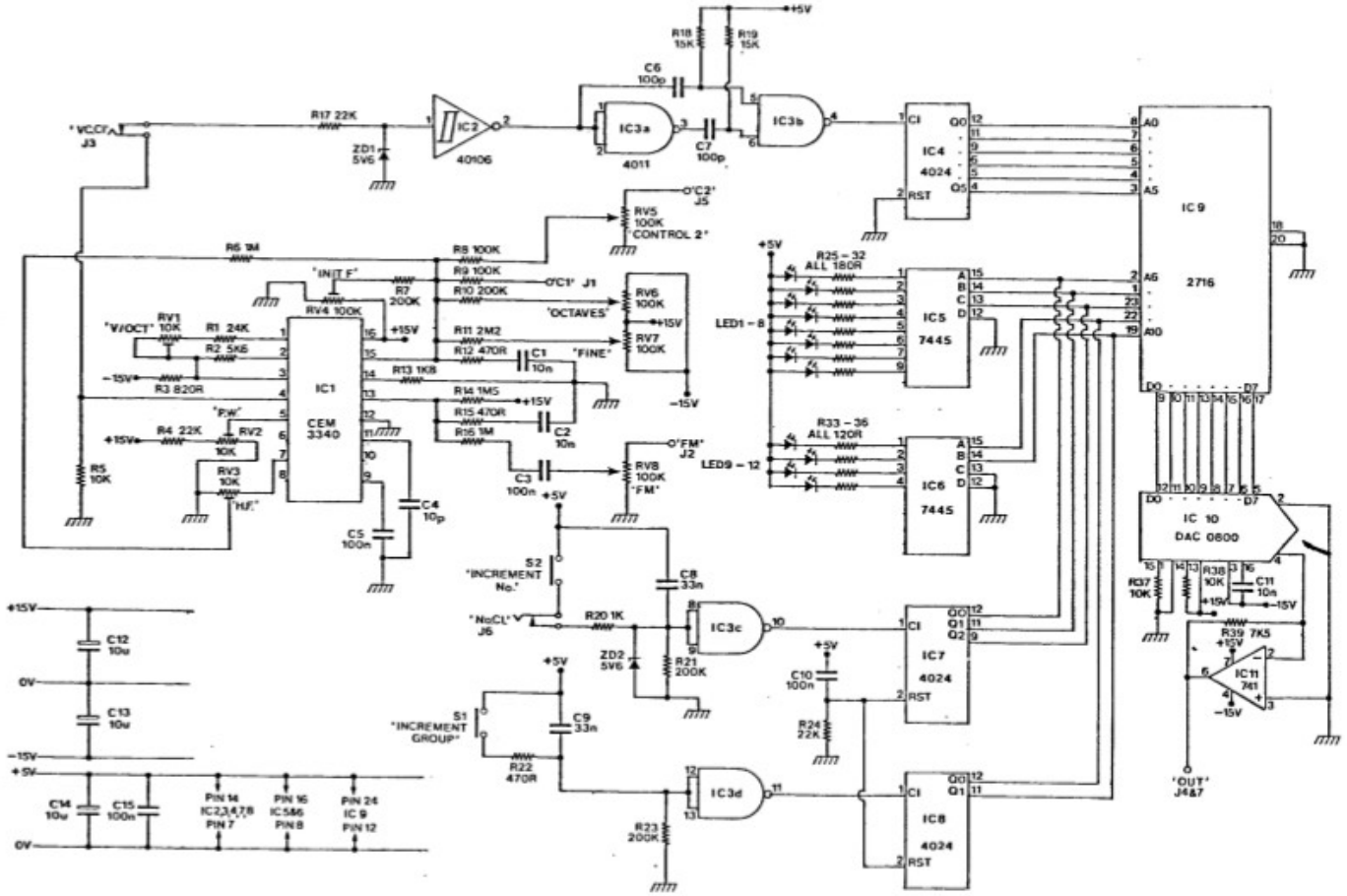

FIGURE 2. 80-21 VCDO CIRCUIT DIAGRAM

possible by connection to C1 and C2 (exponential response) and also via a linear frequency modulation input. The C2 and FM inputs are equipped with attenuating potentiometers, RV5 and RV8. Three output waveforms are provided (triangle, sawtooth and pulse), but in this application only the pulse output is required, which is available at pin 4. A positive-going control voltage to pin 5 allows adjustment of the duty cycle of the pulse wave from approximately 0% to 100%. Frequency control is by means of timing capacitor C4 and multiple voltage control via resistors R8-11 to pin 15, which is a virtual earth summing node. In this module, the frequency range has been shifted upwards compared to a normal VCO by altering the value of C4 from 1nF to 10pF. Additionally, pin 13 may be employed as a linear frequency control input, providing the facility of linear frequency modulation. The VCO is configured such that it may be calibrated for an accurate +1V/octave response using presets RV1 and RV3. Provision has also been made for connection to an external VC clock which, if permanently connected, allows the removal of the CEM 3340 and associated circuitry.

The pulse output is suitably attenuated to 5V by R17/ZD1 and is further processed by a Schmitt trigger (1/6 of IC 2). Squaring of the pulse output is necessary as at extremely high frequencies an unacceptable amount of slewing is present, which inhibits operation of the next circuit block, a frequency doubler. The frequency doubling circuitry configured around IC 3a and IC 3b is included to provide an extra octave's range. It functions by separately differentiating both edges of the square wave - C6/R18 differentiate negative edges and C7/R19 differentiate positive edges. The output of IC 3b is then a series of narrow pulses corresponding to both edges of the original square wave clock signal. Ripple counter IC 4 steps through the lower six address bits of IC 9, a 2716 EPROM suitably programmed with wavetables. The data outputs at pins 9-17 of the 2716 go directly to IC 10, which is a high speed multiplying digital-to-analogue converter (DAC 0800). The data is thus converted to an analogue voltage which is buffered by IC 11. The same IC also scales the output to 10V peak-to-peak.

The 32 waveforms are subdivided into 4 Groups of 8 Waveforms and ripple counters IC 7 and IC 8 are used to select the required waveform Number and Group respectively. Their clock inputs (pin 1) are fed by IC 3c and IC 3d which invert and debounce the switches S1 and S2. Additionally, an external input is provided so that a suitable waveform or pulse train may be used to advance the waveform Number in a particular Group. ZD2/R20 are included to limit an incoming externally generated pulse to +5V. R24 and C10 form a power-on reset network to take the reset inputs of the select counters high at switch-on in order to start at waveform Number 1 in Group 1.

IC 5 and IC 6 are BCD to decimal converters and LED drivers, displaying two decimal equivalents present on the upper five address lines of the 2716. Thus the two highest address lines (A_9 and A_{10}) are decoded to light one of four green LEDs representing the waveform Group whilst control lines A_6 to A_8 light one of eight red LEDs representing the waveform Number.

Power supply requirements to the VCDO are +/-15V at approximately 40mA per rail and a separate +5V rail at 500mA.

3. CONSTRUCTION

The PCB component lay-out is shown in Figure 3. There are a number of wire links to be made on the board and these should be inserted first. The rest of the components should then be fitted onto the PCB in order of increasing height (i.e. zener diodes, resistors, IC sockets, presets and capacitors). Note the orientation of the electrolytic capacitors and ensure that all the ICs are inserted as shown on the component overlay as they do not all have the same orientation. The use of a PCB solvent cleaner to remove residual flux is recommended.

Off the board, there are 12 LEDs, 4 potentiometers, 7 jack sockets and 2

push-button switches to be wired up. These components may be mounted on a front panel as shown in Figure 1, or in any other format that individual constructors may wish to use. The connections to be made between the front panel and the PCB are shown in Figure 4.

The PCB has a space for a four pin CHIRI-type connector which may be used for the power supply connections rather than hardwiring them to the board.

4. CALIBRATION

Once construction is complete and the unit has been carefully checked, set all presets to mid-position and power up. Calibration of the VCO circuitry is by way of four presets and is carried out as follows.

Firstly, RV2 is adjusted so that the unit operates over a frequency range from approximately 30Hz up to 10kHz. The correct setting of RV2 is likely to be slightly anti-clockwise from mid-way and can be recognised when the frequency may be increased (e.g. by RV6) without any noticeable sudden jumps.

The two multiturn presets, RV1 and RV3, are used to achieve a precise 1 volt/octave CV to frequency relationship and may be calibrated in a number of ways. The most convenient method is to use a previously calibrated keyboard, but failing this a variable voltage source which can be increased by precisely one volt may be used. Also required is some means of observing the output frequency. The simplest way is to take the output through an amplifier and speaker and to calibrate it by ear, providing the ear concerned has had some musical training. Alternatively, a frequency meter or oscilloscope may be used to visually display the frequency. Once the wiper of RV3 has been grounded, calibration may proceed by increasing the output of the variable voltage source/keyboard by precisely 1 volt whilst it is connected to control input C1. RV1 is then adjusted to

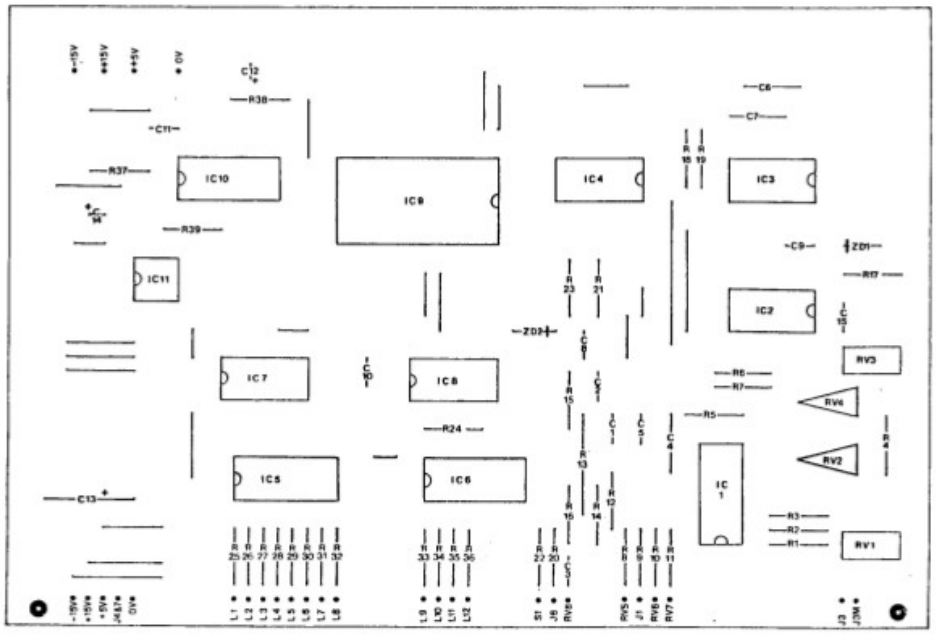

FIGURE 3. 80-21 PCB COMPONENT LAY-OUT

produce an exact doubling of the output frequency. This procedure is best repeated several times over a frequency range of 150-500Hz (this may be varied using RV4, 6 and 7).

This procedure is then repeated using an initial frequency of about 5kHz and adjusting RV3 to achieve an exact doubling of frequency when the applied voltage is increased by precisely 1 volt. The module should then accurately track over its entire range.

The final step in the calibration sequence is to adjust RV4 to give a convenient initial frequency when no inputs are connected, which to a large degree is a matter of personal taste. It may, for example, be set to 65.4Hz, which is the lowest note on a 4 octave C-C keyboard.

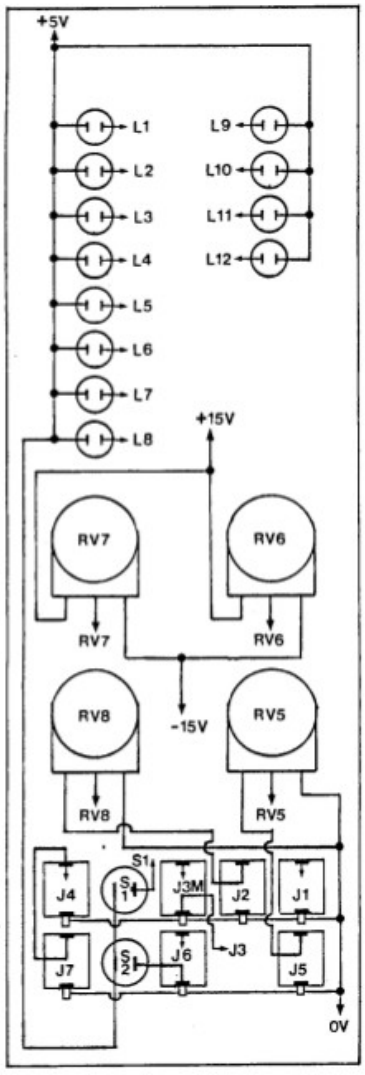

FIGURE 4. 80-21 PANEL WIRING

5. IN USE

The VCDO is supplied with a pre-programmed EPROM containing the data for 32 64-byte waveforms. Organised in 4 groups, these are as follows:-

1) Starting as a sine wave, this group progresses with the addition of extra harmonics in varying quantities, though none above the sixth are added.

2) The waveforms of this group contain some higher harmonics, and as a result sound brighter.

3) With lots of high harmonics and subdued lower harmonics and fundamental, these waveforms sound characteristically sharp and metallic.

4) This group contains some of the basic waveforms to be found on a conventional VCO (sawtooth, square, triangle, pulse etc.) plus one or two more unusual waveforms.

Plots of the 32 waveforms present on the EPROM are to be found in the Table attached.

With suitable filtering and envelope shaping, a wide variety of sounds can be produced, both imitative and innovative. On the imitation side, Groups 1 and 2 can provide some very good church organs as well as xylophone, electric piano etc. Group 3 is ideally suited for bells, gongs, chimes and so on. Group 4 enables you to use the VCDO for conventional synthesis but it also includes some unusual waveforms unavailable on a standard VCO. As might be expected, the use of several VCDOs in a

polyphonic system sounds especially impressive.

One or two unusual modes of operation yield some novel effects. Use of a linear FM patch produces sounds similar to those obtained from the recently popularised FM synthesisers. The waveform select input provides the possibility of cycling through any particular group, which can be quite dramatic when free-running or in time with the EG trigger from a sequencer/arpeggiator.

Additionally, the VCDO can operate as a modulation source. However, the output is stepped, and if being used as a frequency modulator for a VCO, for example, some form of filtering should be used in order to "smooth out" the waveform. This would be unnecessary for amplitude modulation.

6. COMPONENTS

RESISTORS, 5%, 1/4w carbon film	
R3	820R
R4,17,24	22k
R5	10k
R11	2M2
R12,15,22	470R
R18,19	15k
R20	1k
R21,23	200k
R25-32 (8 off)	180R
R33-36 (4 off)	120R
R39	7k5

RESISTORS, 1%, 1/4w metal film, 100ppm	
R1	24k
R2	5k6
R6,16	1M
R7,10	200k
R8,9	100k
R13	1k8
R14	1M5
R37,38	10k

POTENTIOMETERS, SWITCHES	
RV1,3	10k min. multiturn, side adj.
RV2	10k horizontal preset
RV4	100k horizontal Cermet preset
RV5-8	100k lin. rotary
S1,2	push to make

CAPACITORS	
C1,2,11	10n polyester
C3,5,10,15	100n polyester
C4	10p polystyrene
C6,7	100p polystyrene
C8,9	33n polyester
C12,14	10u PCB electrolytic
C13	10u axial electrolytic

SEMICONDUCTORS	
IC1	CEM 3340
IC2	40106
IC3	4011
IC4,7,8	4024
IC5,6	7445
IC9	2716
IC10	DAC0800
IC11	741
D1-8	5mm red LED
D9-12	5mm green LED
ZD1,2	5V6 400mW zener

