digisound

MODULE 80-19
DUAL V.C. LOW FREQUENCY OSCILLATOR

1. INTRODUCTION

The DIGISOUND 80-19 dual voltage controlled low frequency oscillator provides a wide range of features not normally available from conventional designs. First, a frequency range in excess of 50,000:1 and in the prototypes this was greater than 150Hz down to less than 1 cycle every 10 minutes. The actual range may be adjusted by changing one component per oscillator. The frequency of each VCLFO is adjusted using coarse and fine manual potentiometer controls and it may also be changed, or swept, by using an external control voltage. Three output waveforms are provided: triangle, sawtooth and pulse with the latter being adjustable from almost 0 to 100% duty cycle. The output waveforms are nominally 0 to +10V at full gain but each oscillator has a voltage controlled amplifier in its output path to control the gain, either manually or with an external control voltage.

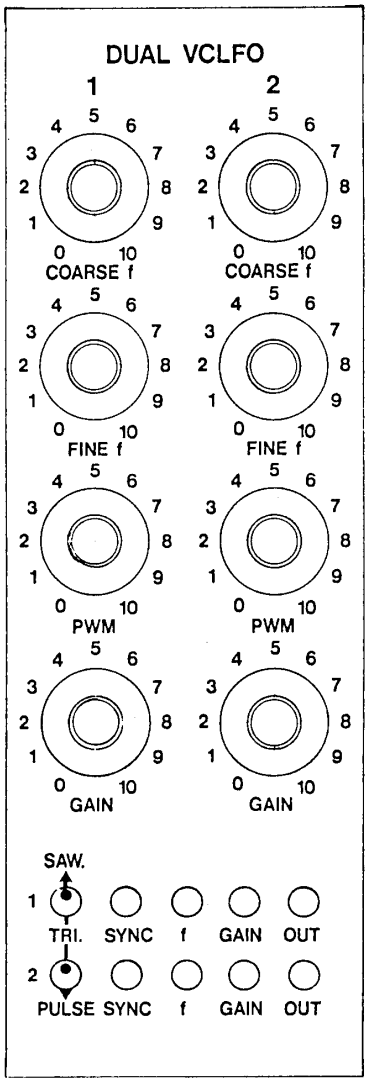

FIGURE 1. 80-19 PANEL LAY-OUT

The design utilises a CEM 3374 Dual Voltage Controlled Oscillator and a CEM 3360 Dual Voltage Controlled Amplifier, both from Curtis Electromusic Specialties Inc. The CEM3374 allows two modes of synchronisation. On one side a positive edge will cause the oscillator to reset and start from zero, which is valuable for a wide range of sweeping and synchronisation effects. On side 2 a positive edge will cause the waveform to reverse direction and may therefore be used to provide more complex modulating waveforms. These sync. features combined with voltage control of both frequency and gain allow many effects which have hitherto required several modules.

2. DESIGN

The complete circuit diagram for the 80-19 Dual VCLFO is shown in Figure 2. Apart from synchronisation both of the oscillators are identical and so the discussion will be confined to VCLFO 1 derived from pins 1 to 9 of the CEM 3374 (IC 2).

The CEM 3374 contains two completely independent precision voltage controlled oscillators. Each has an exponential control input (pins 7,12) as well as a linear control input at pins 8 and 11. Triangle (pins 5 and 14) and sawtooth (pins 2 and 17) waveforms are simultaneously available on chip and the timing capacitors are connected to pins 6 and 13. In order

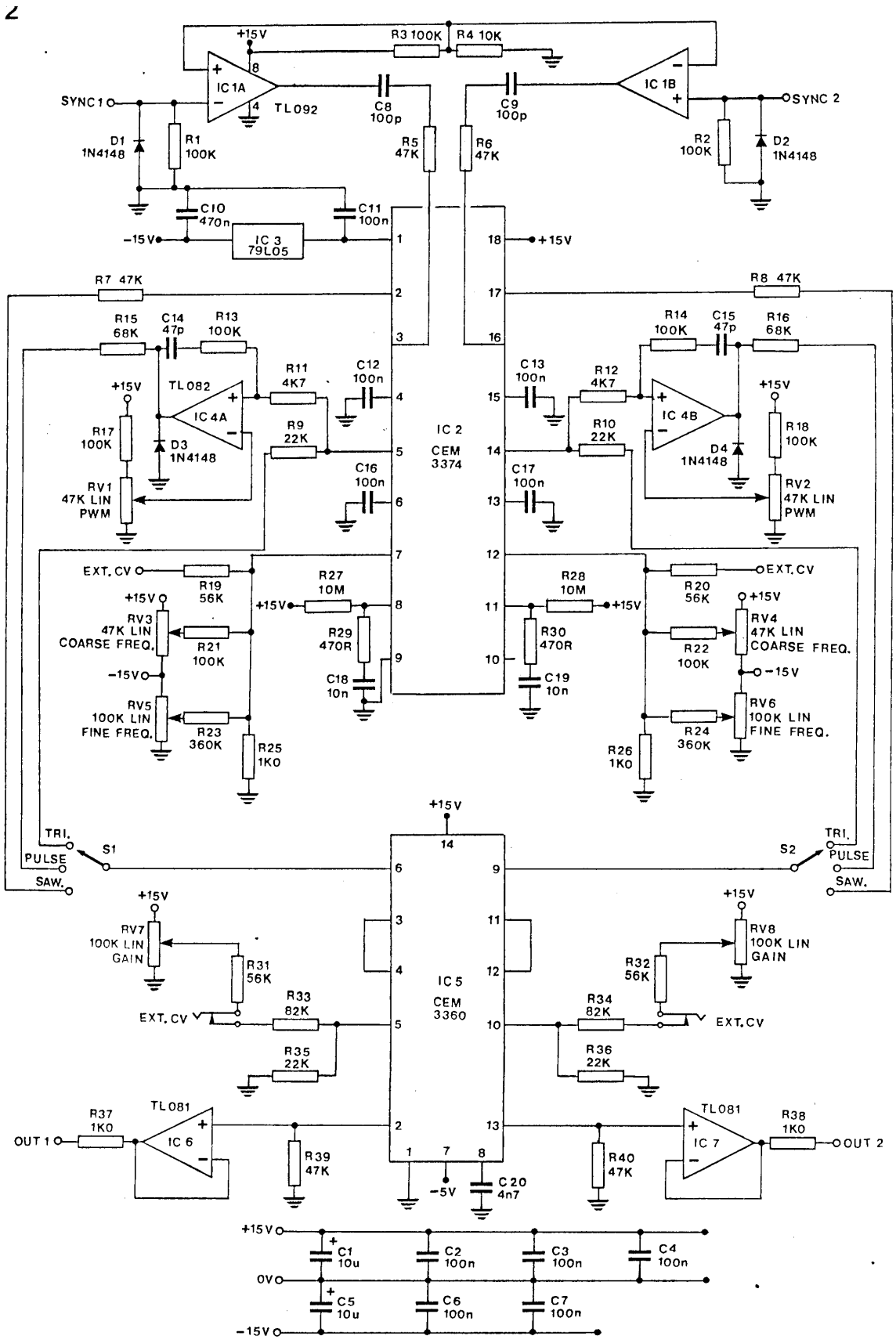

FIGURE 2. 80-19 DUAL VCLFO CIRCUIT DIAGRAM

to provide all of these features in a single IC the temperature compensating circuitry incorporaterd into the CEM 3340 VCO has been omitted. The CEM 3374 does, however, contain a temperature sensor which outputs from pin 10 a nominal 2V5 having a temperature coefficient of +3300 parts per million per degree Centigrade. This output voltage is commonly required as a reference voltage for many digital to analogue converters and so by using it as the reference and deriving the exponential control voltage from the same D to A one may obtain excellent oscillator stability.

The synchronisation input at pin 3 (VCLFO 1) allows the output to reset to zero while the sync at pin 16 causes the waveform to reverse direction (as the hard sync input on the CEm 3340 -please refer to the CEM 3340 data sheet, the 80-2 construction notes, or the DIGISOUND 80 Users manual).

The CEM operates with a positive supply in the range of +10 to +16 volts and a negative supply between -4V5 and -7 volts. To comply with these requirements a -5V supply to pin 1 is derived from the -15V supply using the regulator IC 3.

Turning now to the main circuit, then IC 1 is used for the external sync inputs which will respond to a positive going pulse from about +1V5 to +15V. The inputs are arranged so that synchronisation occurs on the positive edge of the pulse. C8/R5 (C9/R6) differentiate the output from IC 1 and also provide current limiting to the sync input pins on IC 2.

The exponential frequency control input at pin 7 has three inputs, viz., an external control voltage with a nominal 1V/octave scale via R19; a coarse control using RV3 and R21; and a fine adjustment using RV5 and R23. The polarity of the input is such that a positive input increases frequency. Two points should be observed. First, 5% tolerance resistors have been used throughout and so accurate scaling is not available and there is likely to be some variation betwen two VCLFO's. Accurate components were not considered worthwhile in the absence of temperature compensation or for typical LFO type applications. Secondly, the minimum specification for frequency sweep on the CEM 3374 is 50,000:1 and the design utilises this range (and more, if available). The result of the latter is that if both rotary controls are fully clockwise (highest frequency) and one then inputs a voltage to the external control input the output frequency is likely to increase but it may be far from the expected 1V/octave. Thus the external input should be kept within the designed frequency range of between 150Hz to 1 cycle per 10 minutes (for reasons already stated these values may vary somewhat between units). The timing capacitor C16 (C17) in the standard design is a 100nF polycarbonate and changing this component will alter the frequency range. A lower frequency limit (higher capacitor value) is not recommended since the total range may be reduced. Halving the capacitor value will double the frequency levels.

The linear input, pin 8, is used to inject a reference current into the IC via R27 and for this low frequency application the current is kept at a very low level. For a typical VCO application R27 would be 3M0 and C16 would ber 1n0. Components R29, C12 and C18 are for compensation purposes.

The waveform outputs for the VCLFO's are selected by means of a switch - S1 for VCLFO 1 - and a current limiting resistor is selected in relation to the output level of the waveform. The 0 to +10V sawtooth goes to S1 via R7 while the 0 to +5V triangle goes via R9. The triangle output is also used to generate a pulse waveform using the comparator, IC4A. Varying the comparators reference with RV1 allows the pulse width to be varied from about 0% to almost 100% duty cycle. The output of the comparator ramps between about +/-13V and the negative portion is removed (limited to about -0V6) with diode D3. The pulse then goes to S1 via R15.

The waveforms are switched to a CEM 3360 Dual Voltage Controlled Amplifier (VCA). This IC is of the current-in, current-out type and has both exponential and linear control inputs. The linear control has been chosen in

this design since the user will find it easier to judge output level if this is linearly proportional to the input. For example, the outputs are at a nominal level of +10 volts at full gain and so when RV7 is at half rotation, setting 5, the output will be about +5 volts. The manual control input, RV7, may be by-passed and a 0 to +10V external control voltage will adjust the gain over the full range. A useful feature is that (as designed) the CEM 3360 requires a few millivolts of control voltage, from RV7 or externally, before the output level begins to increase. Thus the VCLFO may be left connected to a VCO or other sensitive module without fear of modulation breakthrough when the gain control is set to zero. This superior performance in comparison with the more common VCA's has resulted in the widespread use of the CEM 3360 in synthesisers and other equipment. Another useful feature is that no adjustments are required for most applications. The output of the VCA is converted to a voltage by R39 and buffered to provide a low impedance output by IC 6.

3. CONSTRUCTION

The PCB component lay-out is shown in Figure 3 and is quite straigtforward and unambiguous. The best approach to construction is to install components in order of increasing height, e.g., the four wire links followed by diodes, resistors, DIL sockets and so on. The main points to watch at this stage are the orientaion of the IC's, diodes, the electrolytic capacitors C1 and C5 and the -5V regulator but all of these are clearly shown in Figure 3. One other point to observe is the location for C8 and C9 which have holes to accommodate other sizes of capacitors. Ensure that C8 and C9 are installed such that they bridge over the gap, i.e., use the holes nearest IC 1.

In comparison with many other modules there is quite a lot of wiring and the connections are shown in Figure 4. The letters, etc., shown in this diagram indicate that a wire must be taken from that point to the PCB having the same identification mark -

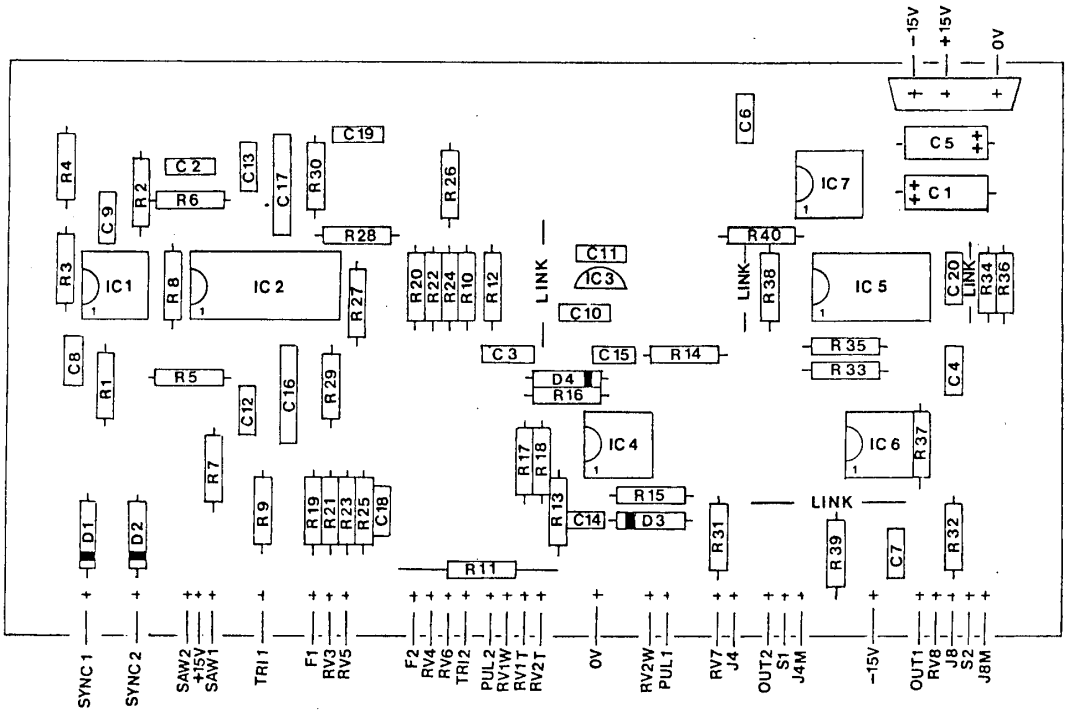

FIGURE 3. 80-19 PCB COMPONENT LAY-OUT

refer to Figure 3 for the latter. Thus 'RV1W' shown on RV1 in Figure 4 is wired to 'RV1W' on the PCB as shown in Figure 3. Keep the wires neat and as short as possible and 1/0.6mm wire is recommended since it enables the wire to be neatly moulded to shape. The use of several colours will assist with subsequent checking.

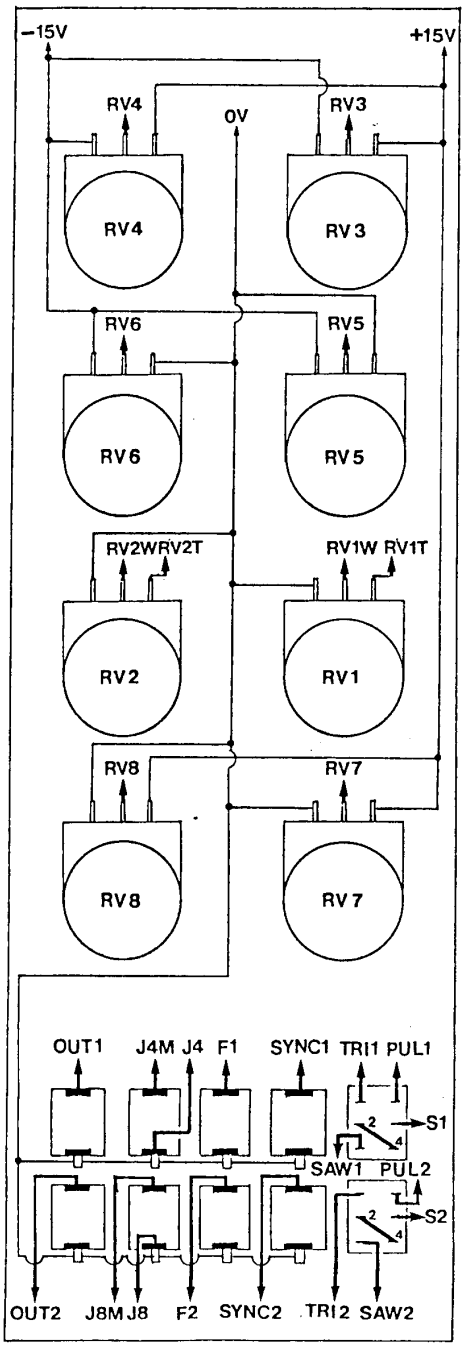

FIGURE 4. 80-19 PANEL WIRING

The jack sockets illustrated in Figure 4 are the type supplied by Digisound Limited. The top connecting tab is the connection made when a jack plug is inserted while the lower connection is broken on insertion of a plug. There is also a ground tab underneath the socket and we recommend these are connected to the 0V line so that the module may be used with equipment which may be separately powered.

On the switches ensure that a wire link is installed between pins 2 and 4 and keep to the orientation shown. After assembly has been completed then carefully check the wiring as well as the component placement and orientation on the PCB. Also carefully examine the foil side of the PCB to check for solder splashes and bridges which may be shorting tracks together. Additionally keep the underside of the PCB as clean as possible, especially around C16 and C17, since the capacitor charging and discharging currents are exceedingly low and will be affected by solder flux and other extraneous matter. These will not affect the operation of the VCLFO's but may well influence the lowest frequency attainable.

After careful checking - some parts are expensive! - the unit may be powered up and put into operation since there are no adjustments to make.

4. USING

Because the 80-19 is voltage controlled it will substitute in most of the applications shown in 'Using The Digisound 80 Modular Synthesiser'. In fact, in some applications the built-in atttenuators (voltage controlled amplifiers) will simplify many patches. The additional uses of the synchronisation inputs will be obvious to the user.

5. COMPONENTS

RESISTORS, 5%, 1/4w carbon film

R1,2,3,13,14,17,18,21,22	100k
R4	10k
R5,6,7,8,39,40	47k
R9,10,35,36	22k
R11,12	4k7
R15,16	68k
R19,20,31,32	56k
R23,24	360k
R25,26,37,38	1k0
R27,28	10M0
R29,30	470R
R33,34	82k

CAPACITORS

C1,5	10u axial electrolytic
C2,3,4,6,7,11,12,13	100n polyester
C8,9	100p ceramic
C10	470n polyester
C14,15	47p ceramic
C16,17	100n polycarbonate
C18,19	10n polyester
C20	4n7 polyester

POTENTIOMETERS, SWITCHES

RV1,2,3,4	47k lin. rotary
RV5,6,7,8	100k lin. rotary
S1,2	1p3w sub. min. toggle

SEMICONDUCTORS

IC1	TL 092
IC2	CEM 3374
IC3	79L05
IC4	TL 082
IC5	CEM 3360
IC6,7	TL 081
D1,2,3,4	IN4148