digisound

MODULE 80-18
MULTI-FUNCTION ENVELOPE GENERATOR

1. INTRODUCTION

The DIGISOUND 80-18D Dual Envelope Generator consists of two independent generators constructed on the same PCB. Each envelope generator may be operated in one of three modes. These are:-

1. NORMAL. This is the conventional ADSR type of envelope, illustrated in Figure 2, in which the duration of the sustain period is determined by the presence of a gate voltage which in turn is equal to the period a key is depressed.

2. AUTOMATIC. In this mode a short pulse will cause the envelope to

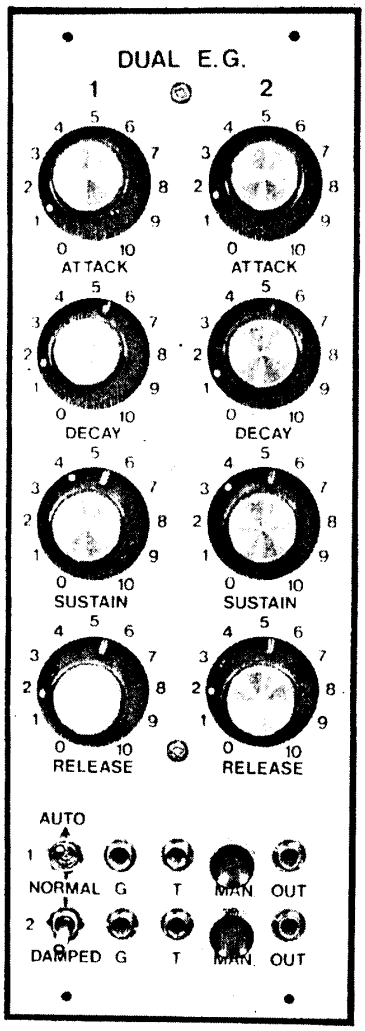

1. 80-18D PANEL

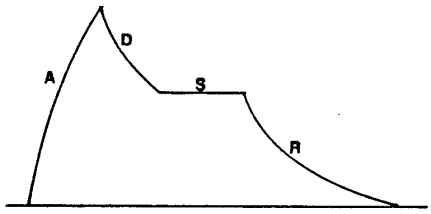

2. NORMAL ADSR ENVELOPE

cycle through a complete ADR envelope of the type illustrated in Figure 3. This mode is useful when the module is used in conjunction with programmable sound generators which normally only output a short pulse coincident with the start of a note. It will also be found useful by less skilled keyboard players since pressing a key momentarily will provide a complete envelope and one does not have to get the sustain period timing correct. It is also applicable to situations where long envelope times are set, since the user will have both hands free to manipulate the synthesiser while the contour is progressing through its cycle.

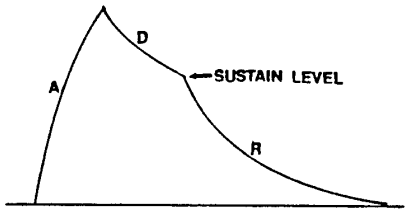

3. AUTOMATIC ENVELOPE

The AUTOMATIC mode is particularly beneficial when envelopes are being initiated from non-keyboard sources, for example, an LFO or the internal clock of the 80-12 Noise Generator/Sample & Hold module. A short pulse will now generate a complete ADR envelope and, by adjustment of the time constants, this type of envelope can be made to approximate the ADSR type, as is evident from Figure 2. Usually these external sources would only generate a limited AD type of envelope.

3. DAMPED. The objective of this mode is to more closely simulate the piano envelope which has a sharp attack, a brief initial decay, a long release and finally a very short release as the damper is applied to the string. This ADRR envelope is illustrated in Figure 4. In this

mode release of the key, which is the end of the gate pulse, causes the final release, R 2, to occur. In other words releasing the note has the same action as applying the damper on a piano.

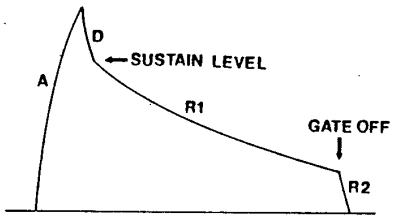

4. DAMPED ENVELOPE

Other features of the 80-18 Envelope Generator are:-

i. Independent trigger input for re-triggering and generating multiple peak envelopes in the NORMAL and DAMPED modes.

ii. Gate and trigger pulses within the range of +3V to +15V are acceptable.

iii. Wide range of time constants. Typically 2 milliseconds to 20 seconds and a minimum of 10 seconds. If higher time constants are required then the upper limit is best extended by increasing the value of C 9.

iv. 0 to +10V peak attack output. This is user adjustable to other values if required.

v. 0 to 100% sustain level.

vi. The time constants may be trimmed to match other 80-18's in polyphonic applications.

vii. Low control voltage feedthrough which means low residual voltage when the envelope cycle is completed thus ensuring that the VCA is 'off'.

viii. Manual gating facility.

2. DESIGN

The 80-18 originates from a design by Doug Curtis, the president of Curtis Electromusic Specialties, and the heart of the module is the CEM 3310 Voltage Controlled Envelope Generator from this company. The CEM 3310 is also used in the versatile DIGISOUND 80-10 VCEG.

The complete circuit diagram for the 80-18 is shown in Figure 5 where it will be observed that the three operating modes are obtainable by simply switching S 1 to the appropriate position.

The main circuitry around IC 2, CEM 3310, is conventional and full details of using this device are to be found in the Data Sheet for this IC. RV 1. 3, 4 and 5 and associated resistive dividers are used to adjust the sustain level and the time constants for attack, decay and release. In the sustain line there is a trimmer, RV 2, which allows accurate matching of the peak attack voltage to the peak sustain voltage. The latter may be accomplished automatically with the CEM 3310, as in the 80-10 module, but to keep cost to a minimum a manual trimmer has been used in the present circuit. The

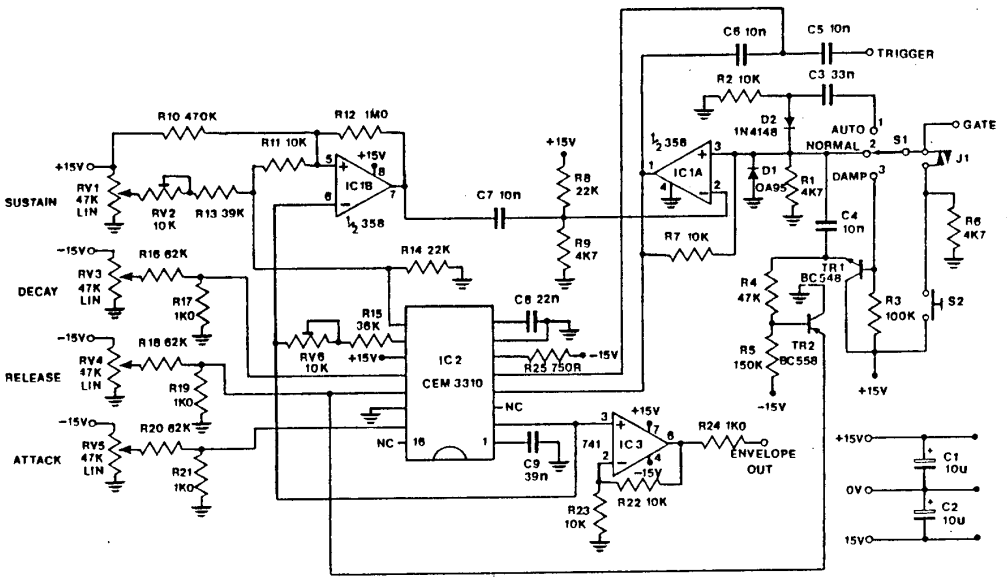

5. CIRCUIT DIAGRAM

time constants are also governed by C 9 plus the feedback components RV 6 (for matching units in a polyphonic system) and R15. With the components listed the A. D and R time values may be varied between two milliseconds and about twenty seconds or at least delete ten seconds. IC 3 is solely to convert the +5V output of the CEM 3310 to a +10V output which is compatible with the rest of the DIGISOUND 80. If a +5V output is adequate for use in another system then IC 3 may be by-passed, or omitted. Likewise the gain of IC 3 may be modified for other peak output voltages.

The unusual part of the circuit is built around IC 1, TR 1 and TR 2. In the NORMAL mode a gate pulse, in the range of approximately +3V to +15V, will simply switch the output of IC 1A high and this output is connected to the gate pin (pin 4) of the CEM 3310. A simultaneous trigger pulse will also be generated and applied to pin 5. The CEM 3310 requires both pulses in order to generate useful envelopes but the trigger pulse is readily obtained by differentiating the gate pulse.

If an independent trigger pulse is also available then this may be applied to the TRIGGER input, C 5, while the gate is high and so initiate a new attack cycle for generation of multiple peak envelopes.

In the AUTOMATIC mode IC 1A will again go high and produce the required gate and trigger pulses. Note, however, that IC 1A is acting as a set-reset flip-flop and in this mode the length of the gate pulse at the input, S 1, is of no consequence and is solely used to switch IC 1A high. · The envelope then progresses through the attack and decay phases and when the latter is within about 100mV of the sustain level, as determined by R10 and R11 connected to IC 1B, the output of IC 1B goes high which will then reset IC 1A low and cause the envelope to go into its release phase. In other words when IC 1A goes low as the decay voltage matches the sustain voltage then as far as the CEM 3310 is concerned the action is the same as when the normal gate pulse is removed.

When S 1 is switched to the DAMPED mode then the gate pulse is applied to the base of TR 1, switching it on and producing a positive pulse to IC 1A which, as before, initiates the envelope. Again in this mode an independent trigger may be applied, if required. With IC 1A high the cycle will normally follow the same procedure as the automatic mode and it will be reset low by IC 1B when the decay more or less matches the sustain level which has been manually set by RV 1. When the gate pulse is removed then TR 2 will be turned on and since its emitter is connected to the release control of the CEM 3310 it will short out this input and cause the second release phase (denoted by R2 in Figure 4) to go to zero in several milliseconds. There are two points which should be apparent from this description. First if the gate pulse is removed earlier than indicated in Figure 4 then the cycle will end before the piano type envelope is obtained. Likewise if one allows the first release period to go to zero, or approaching same, then the damper action will obviously not be effective.

The circuit also includes a manual gating facility using the push button, S 2, and this facility is disabled by J1 when external signals are in use.

3.CONSTRUCTION

Construction is greatly simplified since the PCB has a component overlay printed on it. A reproduction of this overlay is shown in Figure 6 and may be used for reference when the PCB markings become obscured by the components. The main point to note is that the PCB accepts two envelope generators with the same component numbers for each. The two are, however, well separated and this separation is indicated in Figure 6. Take the usual precautions regarding orientation of semiconductors and the electrolytic capacitors. In the case of diodes a line is shown after the diode number and this line indicates the orientation, i.e. the band on the body of the diode should face the hole nearest the band on the PCB.

The panel wiring diagram is shown in Figure 7 and again the two envelope generators are clearly marked. Note the link on switch S 1 which converts it to a single pole 3 way type. The jack sockets illustrated represent the type supplied by Digisound and the top connection is the normal make contact while the bottom one is the connection which is broken on inserting a jack plug. The latter has been used on J1 to disable the manual gate when an external gate is in use. Finally, the white tab underneath the socket represents the ground terminal which should be connected to the OV line. Bare

solid wire (1/0.6mm type) may be used for connecting all the ground tabs together but insulated wire should be used elsewhere Grounding the jack sockets allows the module to be readily connected to other equipment which is powered from a different supply. The arrows in Figure 7 indicate connections to the PCB and the markings correspond with those printed on the PCB.

After checking component orientation, absence of solder bridges and the wiring then the unit may be powered up from a ±15V supply. The three operating modes may be checked using the manual gating button, S 2. There are two adjustments which may be made although the unit will function perfectly well if the two trimmers, RV 2 and RV 6, are set to their mid positions.

RV 2 allows matching of the peak sustain, RV 1 fully clockwise, to the peak attack voltage. That is to ensure that a sudden jump or drop does not occur at the end of the attack time when RV 1 is set to its maximum. The simplest way of adjusting this is to set the attack time to about 5 seconds and the sustain to maximum and observe the output of the envelope generator with an analogue voltmeter while keeping the manual push button depressed. Adjust RV 2 until there is no sudden change in voltage at the end of the attack cycle. Alternatively the 80-18 may be connected to an 80-2 VCO via Control Input 2 and by attenuating the input sufficiently a sudden change in tone will be discernible at the end of the attack period if peak attack and maximum sustain are not matched. Another alternative is to observe the envelope with an oscilloscope.

As inferred above, for normal use RV 6 may simply be left in its mid position. If, however, you wish to obtain the shortest possible time constants then turn RV 6 fully anti-clockwise. If the longest maximum times are of greater interest then conversely turn RV 6 fully clockwise. RV 6 is primarily for matching units in a polyphonic system and the most reliable method of matching is using a triggered oscilloscope. With this method the attack potentiometer, RV 5, should be set to its minimum and RV 6 adjusted to give an attack time of two milliseconds. An alternative method is to connect up the polyphonic system and gate the 80-18's simultaneously and then progressively match them in pairs by listening to the outputs from the appropriate VCA's. Again the matching is carried out using the attack time (all other potentiometers fully anti-clockwise) and it will be found best to set the attack pot. at some specific point on the dial. RV 6 is then adjusted until the peak output is reached simultaneously from a pair of 80-18's. One of this pair is then used to match a third unit and so on. This method is quite adequate since if one cannot discern a difference between units then the calibration is satisfactory.

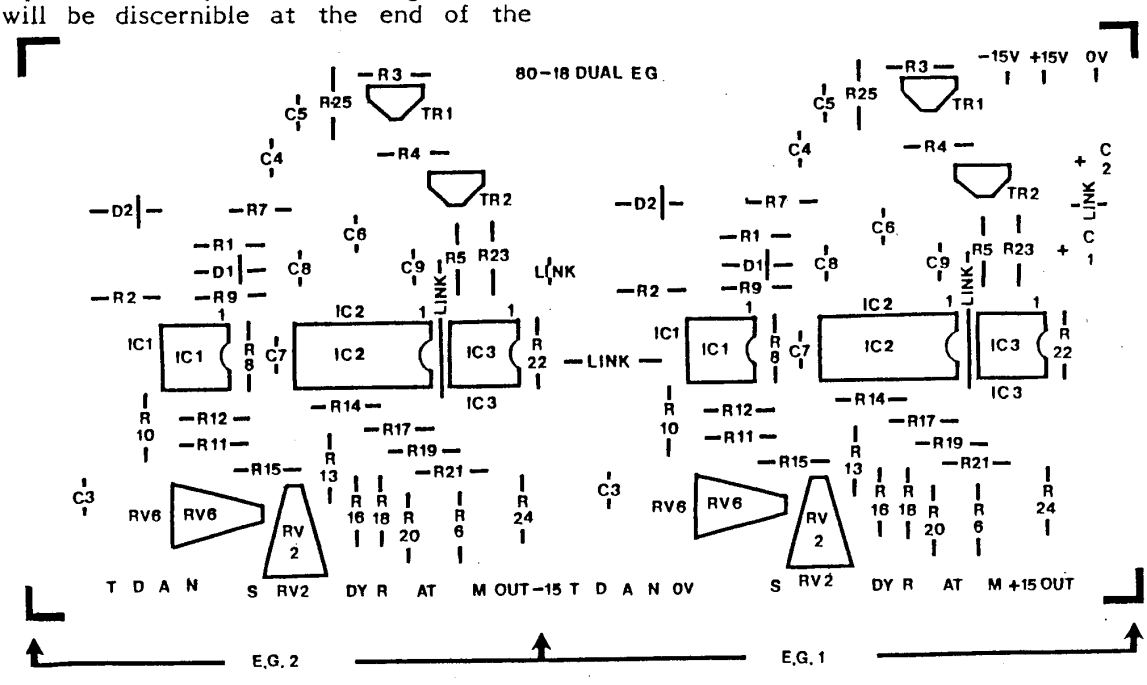

6. PCB COMPONENT OVERLAY

COMPONENTS:

RESISTORS, $\frac{1}{4}$w, 5% carbon film

R1,6,9	4k7
R2,7,11,22,23	10k
R3	100k
R4	47k
R5	150k
R8,14	22k
R10	470k
R12	1M0
R13	39k
R15	36k
R16,18,20	62k
R17,19,21,24	1k0
R25	750R

POTENTIOMETERS

RV1,3,4,5	47k lin.
RV2,6	10k carbon preset

CAPACITORS

C1, 2	10u/35V PCB elect.
C3	33n MKH
C4,5,6,7	10n MKH
C8	22n MKH
C9	39n MKH

SEMICONDUCTORS

IC 1	LM 358
IC 2	CEM 3310
IC 3	741
TR 1	BC 548
TR 2	BC 558
D 1	OA 95
D 2	IN 4148

MISCELLANEOUS

S 1	1p3w sub-min. toggle
S 2	push to make

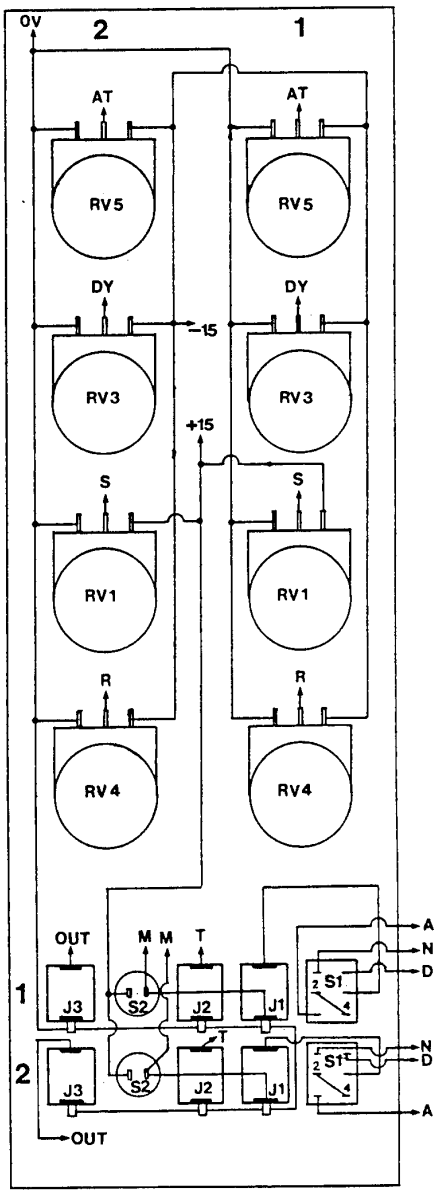

FIGURE 7. PANEL WIRING

4.USING

The DIGISOUND 80-18 may be used for all envelope shaping applications and one should refer to 'Using the Digisound 80 Modular Synthesiser' manual for comprehensive information of such applications. The additional AUTOMATIC and DAMPED modes will obviously be useful in specific patches and these should be obvious.

There are two points which should be noted regarding the 80-18:

i. In the AUTOMATIC mode the system may latch up if the sustain control is at or very near its maximum. To some degree this depends on the impedance of the gate source but in any event a latch up situation is quickly cured by switching to the NORMAL mode and back again.

ii. The input impedance of the gate

input is relatively low, typically 4k7 in the NORMAL and DAMPED modes and 10k in the AUTOMATIC mode. Thus simultaneous gating of more than two 80-18's from another module with a nominal output impedance of 1k0 may cause loading of this external module. This is not, however, a problem with the standard gate outputs from the 80-15D2 or from 'ALPHADAC 16' since these gate outputs are of near zero impedance. The loading problem referred to will simply reduce the amplitude of the output from the module used for gating, for example, with an 80-3 VCLFO the amplitude of the waveform will gradually be reduced, and possibly degraded, as more 80-18's are connected up. This may not affect the gating of the 80-18 but if the waveform is also being used elsewhere then one should be aware of the loading effect. This situation could have been avoided by installing a buffer on the gate input but it is unlikely that the low impedance of the module will cause any problems in practical situations.

Other features of the 80-18 concern its use with the ALPHADAC 16 operating in the arpeggiation modes. First, the NORMAL (ADSR) envelope must be selected. More important is the fact that the very short pulses generated in the staccato mode will not re-trigger the envelope generator. The 80-18A should therefore be used for the monophonic voice (split keyboard) when, or if, the staccato effect is required.

digisound

MODULE 80-18A
ADSR ENVELOPE GENERATOR

These construction notes must be read in conjunction with those for the DIGISOUND 80-18 Dual Multi-Function Envelope Generator.

1. MODIFICATIONS FOR 80-18A

The 80-18A provides the 'NORMAL' envelope function, that is, a standard ADSR envelope. Two envelope generators may be installed on a single PCB. The same panel and PCB is used for both the 80-18 and 80-18A and the latter is obtained by simplifying the input stage. This is illustrated by the circuit diagram of the 80-18 shown in Figure 1 and for the 'A' version nearly all of the components within the dotted area are omitted. The two components which remain are:-

i) R1 which becomes 10k

ii) D1 which gives fast protection against negative voltages, for example, if the module is being gated by a ±V pulse or other waveform.

To simplify subsequent construction you should now cross out, from the 80-18 list, those components not required for the 'A' version. Also amend the value of R1. Make these alterations in pencil since you may wish to convert the module to a multi-function type later.

2. CONSTRUCTION

For construction, in addition to omission of certain components, as described above, the other changes required are:-

i) Install a wire link on the PCB across the holes which would have been used for R7.

ii) The 'make' contact from the GATE jack socket is taken direct to the NORMAL (N) input on the PCB.

If the DIGISOUND panel is being used then it is suggested that a jack socket be installed in the hole prepared for the multi-function switch. This is solely to improve appearance.

Other construction and setting up procedures are the same for the 80-18.

3. USING

The impedance of the GATE input is 10k but otherwise most of the information listed for the NORMAL mode of operation of the 80-18 is still applicable. The exception being that the 80-18A will be re-triggered in the staccato mode of the ALPHADAC 16 arpeggiation routines.

COPYRIGHT DIGISOUND LIMITED. 1981.

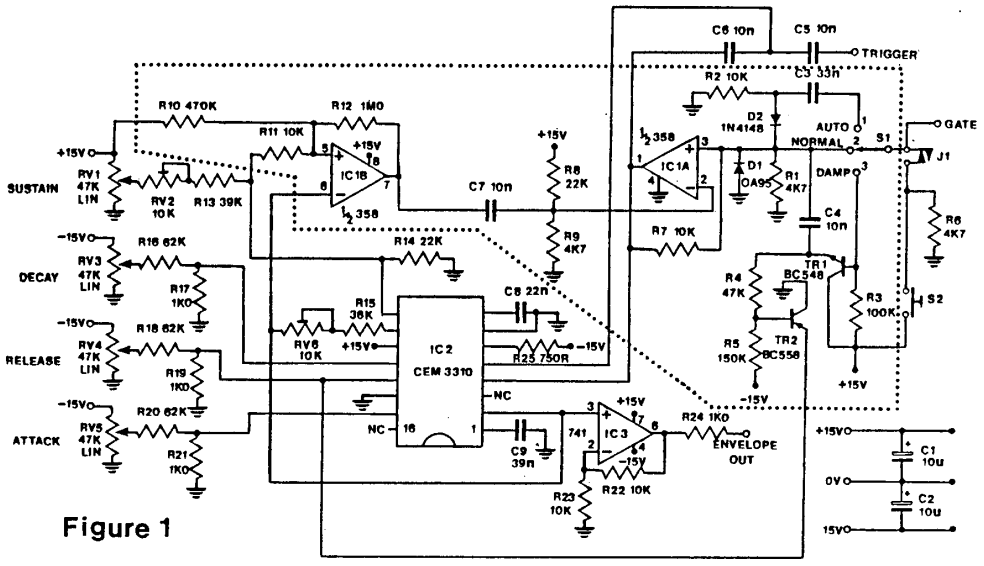

Figure 1