digisound

MODULE 80-16
DUAL RESONANT FILTERS

1. INTRODUCTION

The main application of the DIGISOUND 80-16 Dual Resonant Filters (DRF) is to boost specific bands of frequencies as an aid to more closely simulating traditional musical instruments. The technique is, however, applicable to the modification of 'electronic' sounds. The frequency range of the filters is typically 30 to 3,500Hz and their Q may be varied from 0.5 to 10. The selected frequencies may be boosted by about 13dB above the original signal and a particular advantage of the current design is that this boost is available at all Q levels without having to worry about possible overvoltage and distortion. In fact the peak outputs are within +/-1dB, irrespective of Q, and the 'gain' is adjusted by attenuating the bandpass outputs.

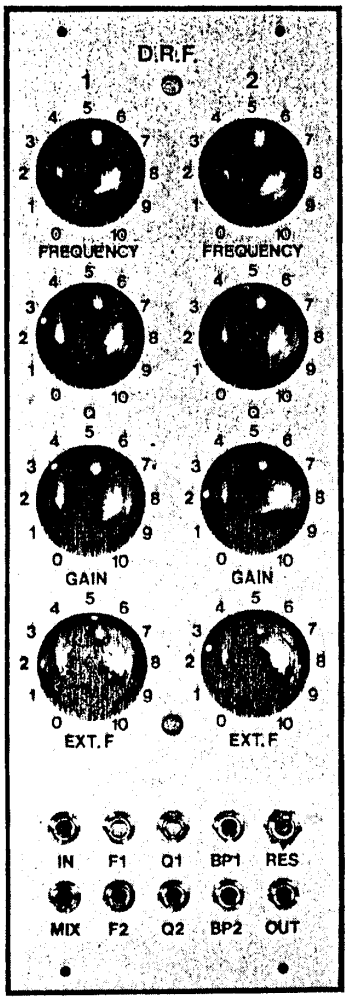

FIGURE 1. 80-16 PANEL

The design is based on the CEM 3350, from Curtis Electromusic Specialties, and this IC is a Dual Voltage Controlled State Variable Filter. As a result of using this device it becomes inexpensive to add external voltage control of both frequency and Q. The 80-16 module therefore provides this capability plus independent band pass outputs for each filter. These latter outputs are inverted with respect to the input signal and are convenient for the combination of two modules in parallel when more than two resonant peaks, or bands, are required. The bandpass outputs are also available with the same polarity as the input signal and the module is converted to resonant filters by switching in a proportion of the original signal. The 80-16 may therefore be used as dual bandpass filters and the external voltage control allows the generation of swept bandpass and other 'voicing' effects.

2. DESIGN

The complete circuit diagram for the 80-16 DRF is shown in Figure 2. It is readily apparent that it is centred around IC2, the CEM 3350, whose pin out and functional block diagram is shown in Figure 3.

Most of the design is best understood by reference to specific features of the CEM 3350. First, although the IC accepts a wide range of power supplies it is not guaranteed to withstand a total voltage greater than 26V across the V_{CC} and V_{EE} pins. To avoid this situation the CEM 3350 is operated from +/-12V supplies by using the 100mA 12V regulators, IC3 and IC4.

Next, the transconductors are the usual NPN differential pairs with current mirror active loads, similar to the CA3080 and LM13600 operational transconductance amplifiers (OTA's).

In common with these latter devices the signal levels to the CEM 3350 must be attenuated to a low level, typically 20 to 80mV, to avoid distortion. The inverting input stage built around IC1A provides an initial 33% signal reduction and further attenuation is obtained with R3/R4 on one side and R21/R22 on the other. Thus for a 10V p-p input signal the input to the CEM 3350 will be about 20mV. The input signal are connected to pins 4 and 14 which are termed the Variable Gain Inputs, V_{IV}. These inputs allow a fairly high signal levels without the filter going into 'jump resonance' at high Q settings because the peak gain can never exceed unity at any gain setting. It is the use of these inputs which allows the amplitude of the output signals to be kept constant irrespective of the frequency and Q settings so long as the latter are within the range specified in the Introduction. Obviously higher frequencies and Q levels are obtainable but the output level will begin to fall outside of the specified +/-1dB and the frequency and Q range provided is satisfactory for resonance filters.

As a matter of interest the CEM 3350 also has what is termed 'Fixed Gain Input' at pins 2 and 12 and in most applications of the device the signal will be shared between the Fixed and Variable Gain Inputs in order to use moderate signal levels at high Q levels.

Both low pass and band pass outputs are available simultaneously from the IC and for this application the outputs are naturally taken from the band pass outputs at pins 5 and 15. The filter outputs are of high impedance and they should be connected to high impedance buffer-amplifier with a low input bias current in order to minimise loading of the filter outputs. IC 5A and IC5B are arranged as non-inverting amplifiers and their gain set to restore the signal to the same level as the input signal, e.g., 10V p-p.

Reference to Figure 3 shows that there is a separate transconductor for both frequency and Q control on the two halves of the filter. These cells are all connected to the I_{ref} pin (pin 1) and the value of this current

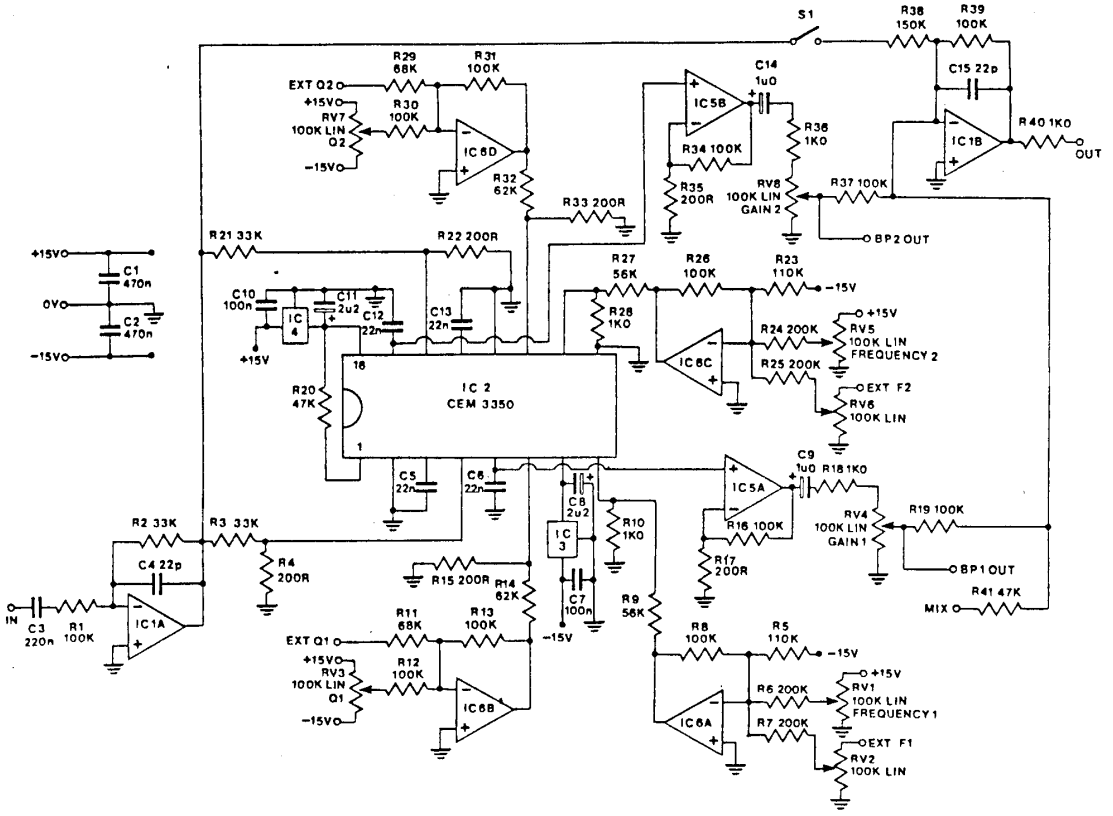

FIGURE 2. CIRCUIT FOR 80-16 DRF

determines the response of the transconductor cells. With a current of 50-200uA the cells will respond to control voltages in a linear fashion whereas with I_{ref} at 400-600uA the response is exponential. R20 connected to the +12V supply produces a nominal 400uA. The frequency and Q controls on both halves are preceeded by inverting amplifiers derived from the quad op-amp IC6. These serve to bring the controls into the usual response, namely, an increasing positive voltage applied to the appropriate op-amp inputs will increase frequency or Q. They also allow external voltage control inputs and for the external frequency control attenuating potentiometers, RV2 and RV6, have been incorporated into the panel. As stated earlier the manual Q controls, RV3 and RV6, allow Q to be varied between 0.5 and 10 with an exponential control response while RV1 and RV4 allow manual setting of frequency in the range of about 30Hz to 3,500Hz. The frequency range is, of course, also governed by the timing capacitors C5, C6, C12 and C13.

If frequency and Q is kept within the specified range then the outputs from the buffer amplifiers, IC5A and IC5B, will be bandpass outputs close to unity gain. These outputs are connected to attenuating pots RV4 and RV8 which allow adjustment of gain prior to the mixing stage built around IC1B. Note that from the wiper of these potentiometers the bandpass outputs, BP1 and BP2, are also available but their signal will be inverted with respect to the input signal. This polarity inversion is not a disadvantage for many bandpass applications. They also provide an easy method of combining two modules in parallel via the 'mix' input, R41, as discussed in the applications section. From the attenuators the two bandpass outputs are combined in the inverting summer, IC1B. With S1 open the two bandpass outputs are present at the output with the same polarity sense as the input signal. Closing S1 allows part of the original input signal to pass through and thus the bandpass outputs are then simply boosting specific frequencies present in the original signal. Starting with a 10V p-p signal which is reduced to 3V3 at IC1A the original signal is further reduced by R38/R39 to 2V2. The maximum output from either of the

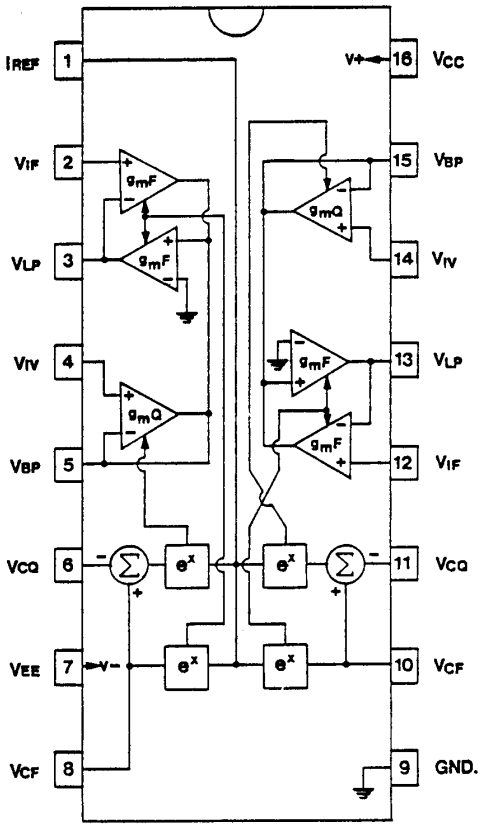

FIGURE 3. CEM 3350 IC

bandpass filters is 10V p-p and thus their maximum boost compared with the original signal is 4.55 times, or +13dB. To alter the module for other signal levels it is usually only necessary to alter the value of R2 to restore this ratio but care should be taken to ensure that the signal into the CEM 3350 is about 20mV. For much lower signals, of the order of a few volts, it would be more advantageous to reduce the value of R3 and R21 so as to maintain 20mV at the V_{IV} pins of IC2.

3. CONSTRUCTION

The 80-16 PCB is printed with a component overlay which simplifies the construction stage. The overlay is reproduced in Figure 4 to allow checking of component placement after the module has been constructed.

Special care should be taken regarding orientation of the electrolytic capacitors and the IC's. For the latter even when the DIL sockets have been installed the number '1', denoting pin 1, will still be visible

on the PCB. In any event compare the completed PCB against Figure 4 before applying power. Also ensure that the wire links have been made and that the foil side of the PCB is free from solder bridges.

The panel wiring diagram is shown in Figure 5 which illustrates the components when viewed from the rear of the panel. The arrows and associated numbers and letters indicate that a wire connection must be made from the position shown to the PCB which has the corresponding identification mark on its mounting edge. Note, however, that the wipers of RV4 and RV8 are also connected to jack sockets J4 and J8 respectively. The jack sockets in the diagram are of the type supplied by Digisound Limited. The top connection, as illustrated, is the connection which is made with the jack plug when the latter is inserted. The lower connection is disabled by insertion of a jack plug. Finally, the tab under the socket is the ground connection. It is recommended that all of these ground connections are wired to the 0V line since this facilitates connection of the DRF to other equipment which may be powered from a separate supply. The ground tabs may be joined together using tinned copper wire but other panel wiring should be made with insulated wire. 1/0.6mm insulated wire is ideal for panel wiring since it retains any shaping and thus allows a neat appearance to be obtained. Wires should be kept as short as practical.

Before inserting IC2 check that the 12V regulators are producing the required voltage, about +12V from IC4 and about -12V from IC3. Turn off power before inserting IC2, the CEM 3350.

No calibration of the 80-16 DRF is required.

4. USING

In common with other DIGISOUND 80 modules the 80-16 Dual Resonant Filters are designed to accept 10V p-p signals with sufficient headroom to avoid distortion with greater signals. Usually the DRF will be located after the VCA, or after the mixer in a polyphonic system. A difficulty begins to arise as the original 10V p-p signal from the VCO is treated by several modules, that is, the signal amplitude is decreasing and if it is too low when it reaches the DRF then signal to noise problems may arise, particularly if used in the band pass mode at high Q settings. If this does occur then the normal signal level reaching the DRF should be checked and R2 adjusted accordingly, as described earlier. For example, for an average signal input of 5V p-p then R2 should be changed to 68k.

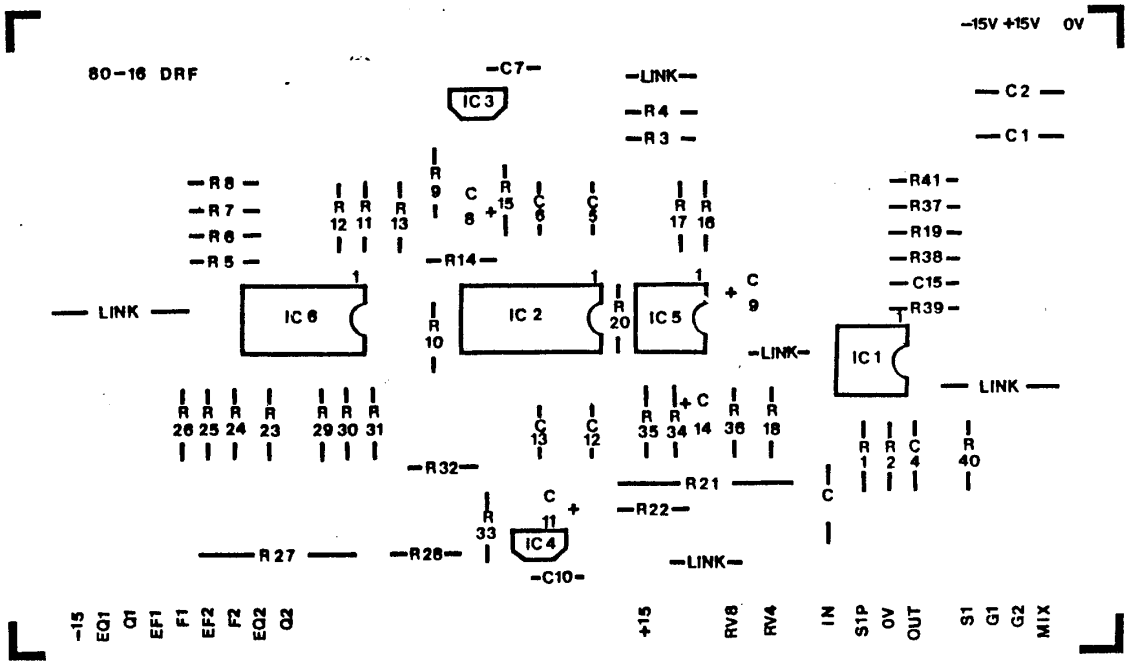

FIGURE 4. COMPONENT OVERLAY FOR 80-16 PCB

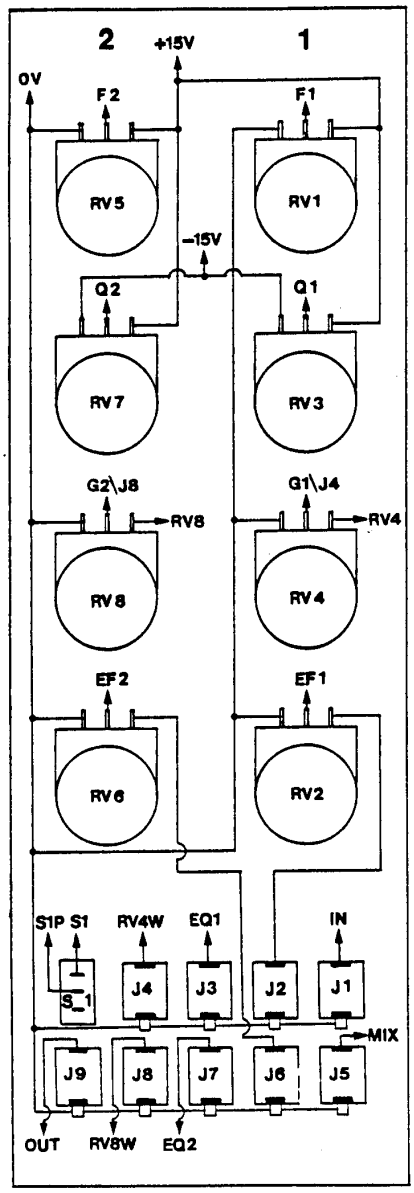

FIGURE 5. PANEL WIRING

Next one should become familiar with the frequency scale of the module. For resonance filtering the effect is best judged by ear and so accurate frequency scaling is uneccessary which is the reason for using 5% resistors and the absence of trimmers in the design. The manual frequency controls are scaled 0 to 10 and as a rough guide the frequency at each whole number will be 30, 50, 90, 150, 250, 420, 720, 1250, 2100 and 3500Hz. The actual values will vary somewhat on each half and also between modules.

The effect of Q setting should also be fully understood and this may be achieved by experimenting with the filters in the bandpass mode. Figure 6 shows the effect of two Q settings (1 and 10) on the signals passed when the frequencies are set at 1kHz and 3kHz. It will be obvious from examination of the response that as Q is increased then the apparent volume will decrease. Thus high values of Q are used to boost a particular harmonic while low Q values will boost a broad band of frequencies. The Q control is also exponential and so RV3 and RV7, which have a 0 to 10 scaling, will result in approximate Q values at the whole numbers as follows: 0.5, 0.7, 0.9, 1.2, 1.7, 2.2, 3.0, 4.1, 5.5, 7.5 and 10.

In the resonant filtering mode, i.e., with S1 closed, the main use of the DRF is to simulate the formants of traditional instruments. The formants are the resonant frequencies of the instruments arising from their mechanical construction and remain constant irrespective of the note played and so there is no need for the filters to track the keyboard control voltage. There are discrepancies

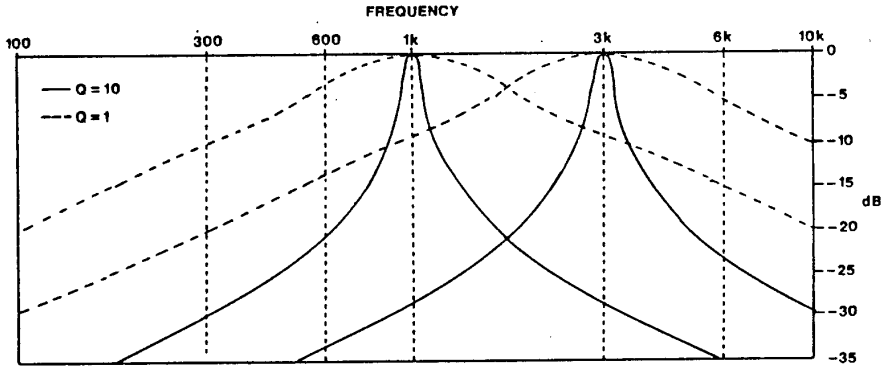

FIGURE 6. EFFECT OF Q ON BANDPASS RESPONSE

between various sources on the formant frequencies of traditional instruments but good results can quickly be obtained by experimentation and some thought given to the sound being imitated, or created. For example, a 'bass' instrument such as the tuba, bass guitar and some drums will obviously have their formants at the lower frequency settings, say, below 300Hz. On the other hand the more high pitched instruments such as woodwind instruments will have formants at about 1kHz or above. In almost every instance one will be using a high harmonic waveform and a moderate Q, say 3 to 5, would be a good starting point.

Using the DRF for the creation of 'electronic' sounds requires rather more in the way of experimentation. For frequency modulation effects attenuating potentiometers have been included on the panel which reduces the amount of patching required. One will have to remember to set the initial frequency, using the manual controls RV1 and RV5, at a point where the external control voltage will not put the frequency of the filter(s) much beyond 4kHz. As this value is exceeded the amplitude will decrease although this can be a useful effect. Likewise when using the external voltage control of Q the manual Q setting should not be more than about number 5 on the 0 to 10 scale otherwise the Q will go so high that very little sound will be obtained, particularly in the bandpass mode. The application of the external control facilities, as well as resonant filtering, is discussed in 'USING THE DIGISOUND 80 MODULAR SYNTHESISER'.

Whether the DRF is being used for formant filtering or for electronic effects it is often beneficial to use two modules and so give enhancement, or treatment, from up to four filters. The additional module will have to be connected in parallel with the first since the input signal is attenuated as it leaves the module. In practice accurate external mixing of two modules in parallel can be quite cumbersome and so the DRF has provision for combining two modules. If four filters are required then the use of a joined patchcord, as shown in Figure 7, connected to the two bandpass outputs, BP1 and BP2, will

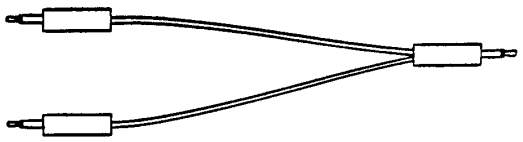

FIGURE 7. 'MIXING' PATCHCORD

produce the average of these two signals. If the two gain controls were at maximum rotation and the bandpass outputs at two separate frequencies (normal case) then the two outputs would be at half the input signal level. The combined output is connected to the 'mix' input and resistor R41 has been chosen to restore their level to unity gain. The two signals are also re-inverted to the same polarity as the input signal and mixed with the other bandpass outputs of the second module and, when in the resonance mode, the correct proportion of the original signal. Care must be taken when attenuating the bandpass outputs from the first module, especially if different levels of attenuation of the two signals are required. The effect of anti-clockwise rotation of the gain control is more accentuated than in normal operation and the reduction of one signal will cause an increase in the other signal. This latter effect is most evident near maximum gain. The other point to observe is that neither gain potentiometer should be at, or close to, zero. Thus if only three filters are required it should be one on the mixing module which is attenuated to zero. While this mixing may also seem cumbersome it is in practice quite easy to obtain the desired levels and it saves having to use a separate mixing facility.

5. COMPONENTS

RESISTORS, 5%, 1/4w carbon film

R1,8,12,13,16,19,26,30,31,34,37 and R39	100k
R2,3,21	33k
R4,15,17,22,33,35	200R
R5,23	110k
R6,7,24,25	200k
R9,27	56k
R10,18,28,36,40	1k0
R11,29	68k
R14,32	62k
R20,41	47k
R38	150k

POTENTIOMETERS

RV1,2,3,4,5,6,7,8	100k lin.

CAPACITORS

C1,2	470n polyester
C3	220n polyester
C4,15	22p polystyrene
C5,6,12,13	22n polycarbonate
C7,10	100n polyester
C8,11	2u2 PCB electrolytic
C9,14	1u0 PCB electrolytic

SEMICONDUCTORS

IC1	TL 082
IC2	CEM 3350
IC3	79L12
IC4	78L12
IC5	TL 072
IC6	LM 348N

MISCELLANEOUS

S1	SPDT sub. min toggle switch

ar-08