fig. a

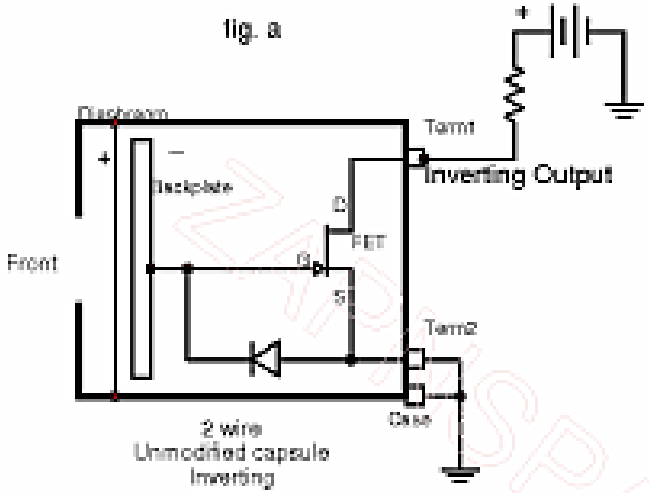

fig. b

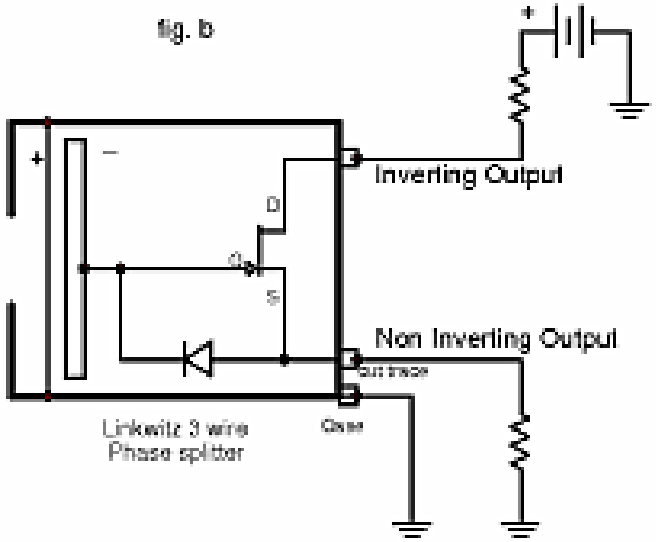

fig. c

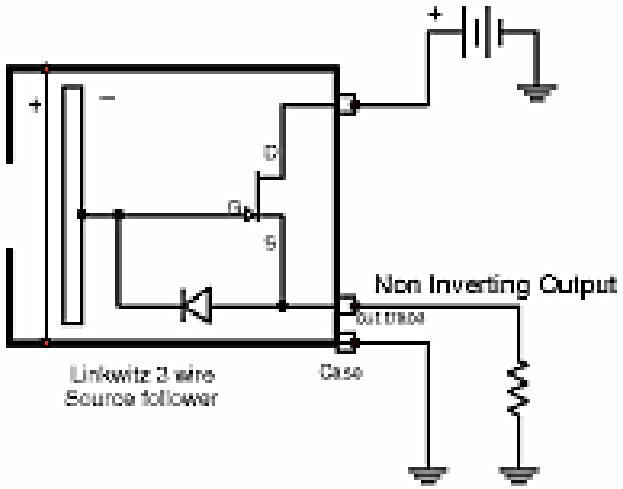

fig. d

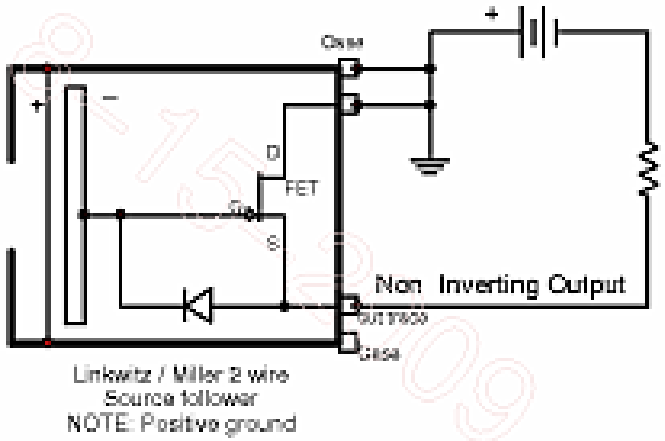

Various internal FET electret capsule configurations ZAPNSPARK 8-15-2009 V 1.6

ZAPNSPARK 8-15-2009