DENON

Hi-Fi Component

SERVICE MANUAL

MODEL AVR-1801/881

AV SURROUND RECEIVER

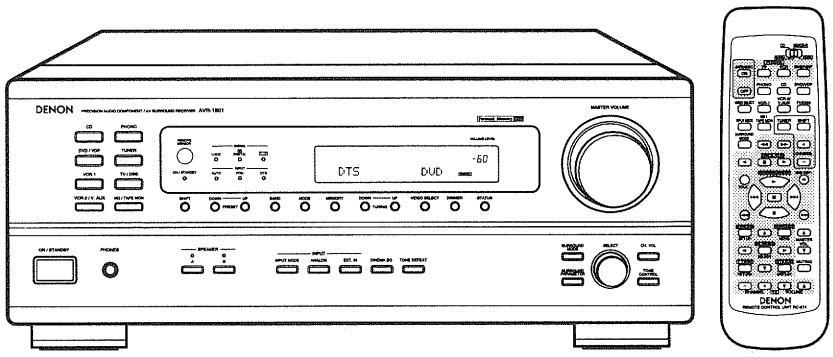

— TABLE OF CONTENTS —

SAFETY PRECAUTIONS 2
SPECIFICATIONS 2
DISASSEMBLY 3
CLOCK FLOW 4
LEVEL DIAGRAMS 5,6
ADJUSTMENT 7,8
SEMICONDUCTORS ..... 9~15
PRINTED WIRING BOARDS ..... 16~23
NOTE FOR PARTS LIST 24
PARTS LIST OF P.W.B. UNIT ASS'Y ..... 24~35
EXPLODED VIEW 36
PARTS LIST OF EXPLODED VIEW 37
PACKING VIEW 38
PARTS LIST OF PACKING & ACCESSORIES 38
BLOCK DIAGRAM 39
WIRING DIAGRAM 40
SCHEMATIC DIAGRAMS ..... 41~48
(1/8) MAIN UNIT, VOLTAGE SEL UNIT 41
(2/8) INPUT UNIT 42
(3/8) FRONT UNIT, TACT S/W UNIT, H/P, POWER S/W UNIT 43
(4/8) CPU UNIT 44
(5/8) CNT UNIT, PRE-AMP UNIT 45
(6/8) VIDEO UNIT, S-VIDEO UNIT 46
(7/8) TUNER UNIT 47
(8/8) DSP UNIT 48

● **Some illustrations using in this service manual are slightly different from the actual set.**

NIPPON COLUMBIA CO., LTD.

SAFETY PRECAUTIONS

The following check should be performed for the continued protection of the customer and service technician.

LEAKAGE CURRENT CHECK

Before returning the unit to the customer, make sure you make either (1) a leakage current check or (2) a line to chassis resistance check. If the leakage current exceeds 0.5 milliamps, or if the resistance from chassis to either side of the power cord is less than 460 kohms, the unit is defective.

SPECIFICATIONS

■ Audio section

● Power amplifier

Rated output:	Front :	70W + 70W	(8Ω/ohms, 20Hz~20kHz with 0.08% T.H.D)
		105W + 105W	(6Ω/ohms,1kHz with 0.7% T.H.D) (U.S.A., Canada & Europe Models)
		120W + 120W	(6Ω/ohms, EIAJ) (Asia Model)
	Center :	70W	(8Ω/ohms, 20Hz~20kHz with 0.08% T.H.D)
		105W	(6Ω/ohms, 1kHz with 0.7% T.H.D) (U.S.A., Canada & Europe Models)
		120W	(6Ω/ohms, EIAJ) (Asia Model)
	Surround :	70W + 70W	(8Ω/ohms, 20Hz~20kHz with 0.08% T.H.D)
		105W + 105W	(6Ω/ohms, 1kHz with 0.7% T.H.D) (U.S.A., Canada & Europe Models)
		120W + 120W	(6Ω/ohms, EIAJ) (Asia Model)
Output terminals:	Front :	A or B 6 to 16Ω/ohms	
		A + B 12 to 16Ω/ohms	
	Center/ Surround :	6 to 16Ω/ohms	

● Analog

LINE input - PRE OUT

Input Sensitivity/input impedance:	200mV/47kΩ/kohms
Frequency response:	10Hz~100kHz: + 1, –3dB (TONE DEFEAT ON)
S/N ratio:	100dB (IHF-A weighted) (TONE DEFEAT ON)

● Phono equalizer

PHONO input - REC OUT

Input sensitivity/input impedance:	2.5mV/47kΩ/kohms
RIAA deviation:	±1dB (20Hz~20kHz)
S/N ratio:	74dB (IHF-A weighted, with 5mV input)
Rated output/Maximum output:	150mV/7v
Distortion factor:	0.03% (1kHz, 3V)

■ Video section

● Standard video jacks

Input/output level and impedance:	1Vp-p, 75Ω/ohms
Frequency response:	5Hz~10MHz — +1, –3dB

● S-video jacks

Input/output level and impedance:	Y (brightness) signal — 1Vp-p, 75Ω/ohms
	C (color) signal — 0.286Vp-p, 75Ω/ohms
Frequency response:	5Hz~10MHz: — +1, –3dB

■ Tuner section

Receiving range:	**[FM]** (note: μV at 75Ω/ohms, 0dBf =1x10^{-15}W)		**[AM]**
U.S.A., Canada & Asia (for Multiple voltage) Models	87.50MHz~107.90MHz		520kHz~1710kHz
Europe & Asia (for China) Models	87.50MHz~108.00MHz		522kHz~1611kHz
Usable sensitivity:	1.0 μV (11.2dBf)		18 μV
50 dB quieting sensitivity:	MONO	1.6 μV (15.3dBf)	
	STEREO	23 μV (38.5dBf)	
S/N ratio:	MONO	80dB (IHF-A weighted)	
	STEREO	75dB (IHF-A weighted)	
Total harmonic distortion:	MONO	0.15% (1kHz)	
	STEREO	0.3% (1kHz)	

■ General

Power supply:	
U.S.A., Canada Models	AC120V, 60Hz
Europe Model	AC230V, 50Hz
Asia(for Multiple voltage)Model	AC115/230V, 50/60Hz
Asia(for China)Model	AC220V, 50Hz
Power consumption:	230W
Maximum external dimensions:	434 (W) × 171 (H) × 416 (D)mm (17-3/32" × 6-47/64" × 16-3/8")
Mass:	11.3kg (24 lbs 14.6 oz)

■ Remote control unit (RC-874)

Batteries:	R6P/AA Type(two batteries)
External dimensions:	54 (W) × 172 (H) × 27.2 (D)mm (2-1/8" × 6-49/642" × 1-5/64")
Mass:	100g (Approx. 6 oz) (including batteries)

* For purposes of improvement, specifications and design are subject to change without notice.

DISASSEMBLY

(To reassemble reverse disassenbly)

Top Cover

Remove 6 screws ① and 3 screws ②, detach the Top Cover in the arrow direction.

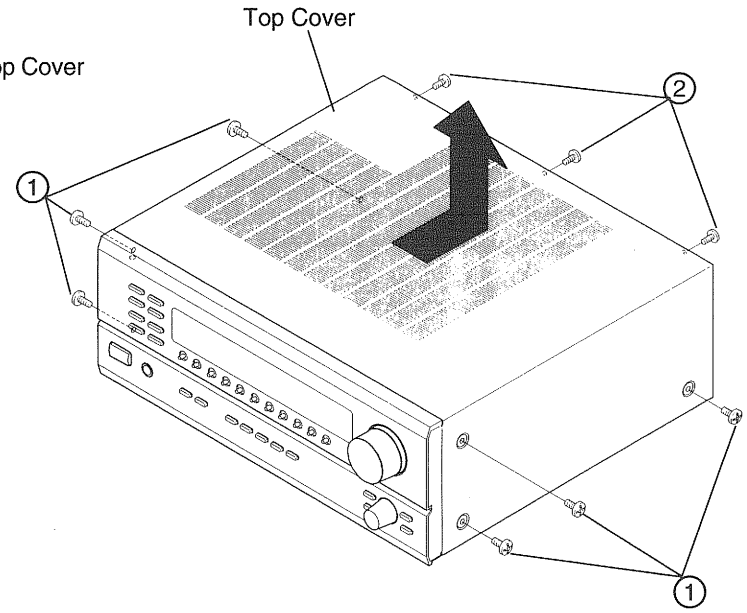

Front Panel

1. Remove 2 screws ③.
2. Remove 4 screws ④.
3. Detach the Front Panel in the arrow direction.

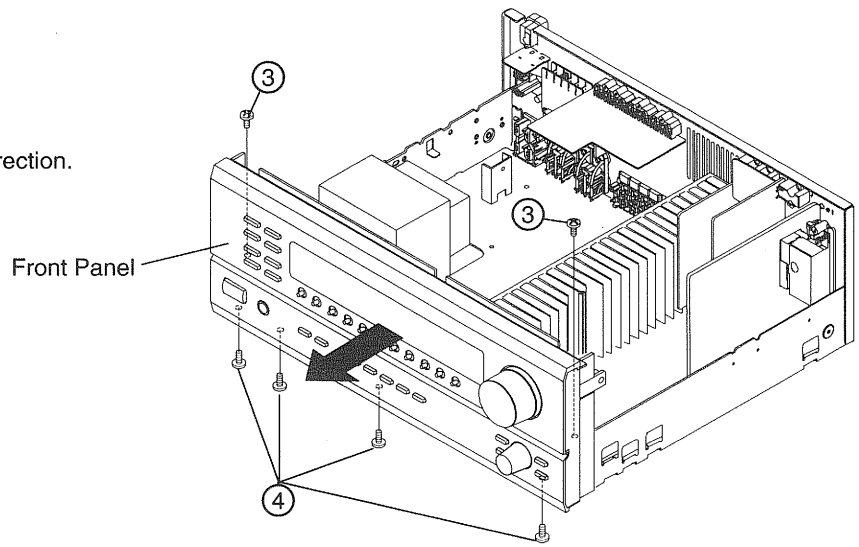

Rear Panel

1. Remove cord bushing ⑤ from the Rear Panel.
2. Remove 35 screw ⑥.
3. While releasing 2 hooks, detach the Rear Panel in the arrow direction.

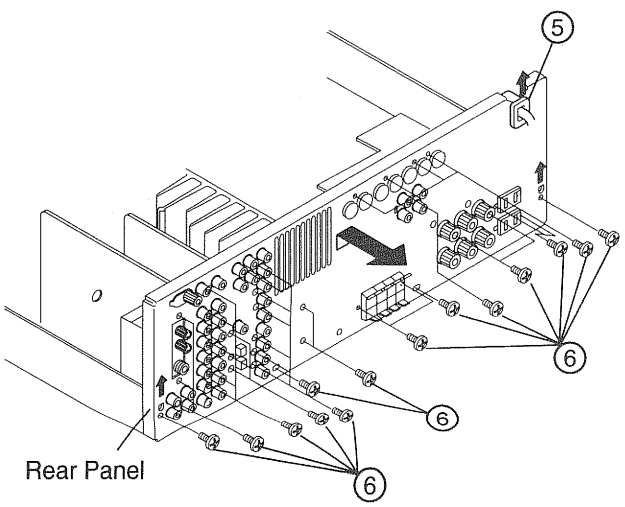

CLOCK FLOW

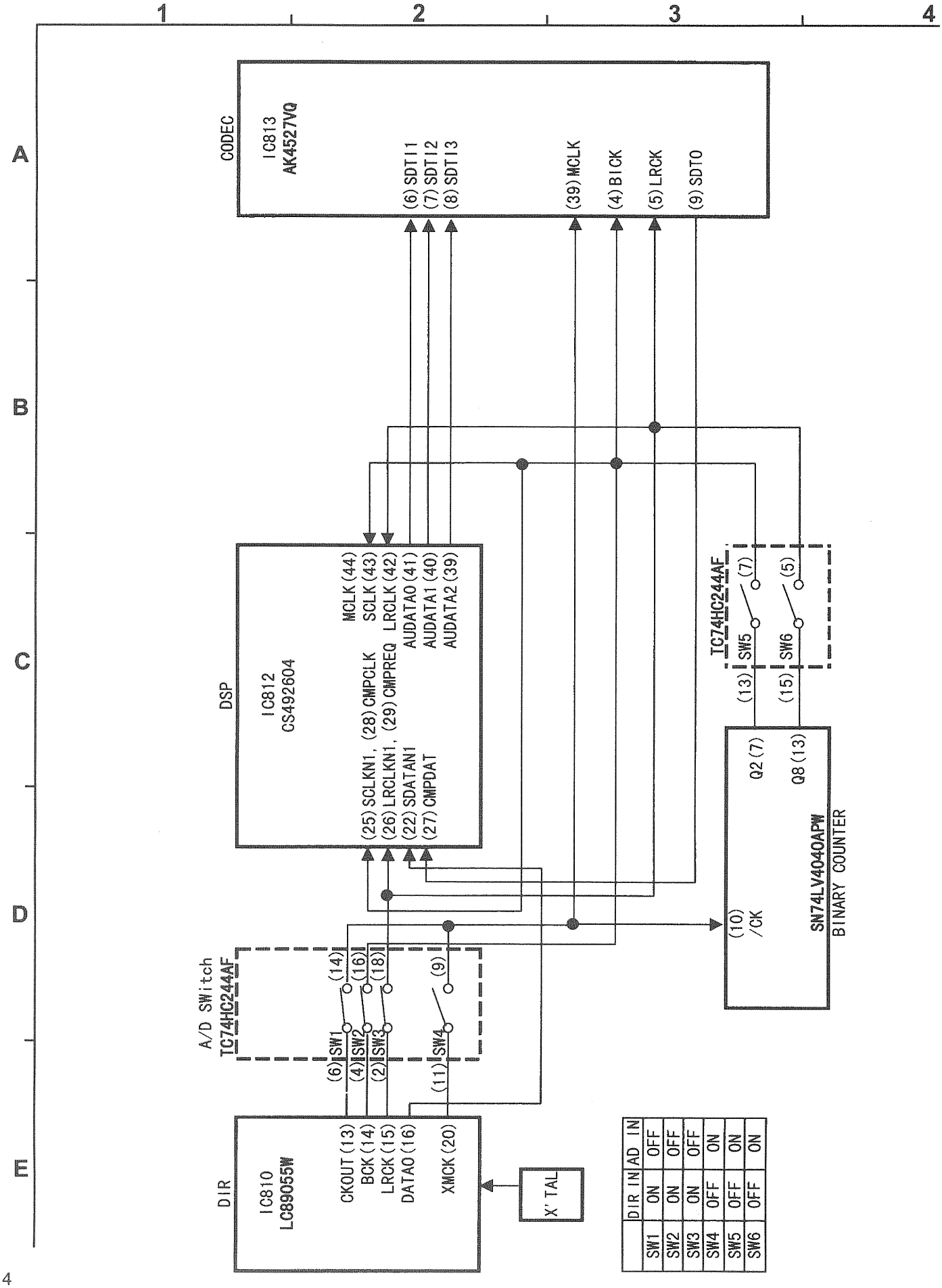
1
2
3
4
A
B
C
D
E
CODEC
IC813
AK4527VQ
(6) SDTI1
(7) SDTI2
(8) SDTI3
(39) MCLK
(4) BICK
(5) LRCK
(9) SDTO
DSP
IC812
CS492604
MCLK (44)
SCLK (43)
LRCLK (42)
AUDATA0 (41)
AUDATA1 (40)
AUDATA2 (39)
(25) SCLKN1, (28) CMPCLK
(26) LRCLKN1, (29) CMPREQ
(22) SDATAN1
(27) CMPDAT
TC74HC244AF
SW5
SW6
(7)
(5)
(13)
(15)
SN74LV4040APW
BINARY COUNTER
(10)
/CK
Q2 (7)
Q8 (13)
A/D SWitch
TC74HC244AF
(14)
(16)
(18)
(9)
SW1
SW2
SW3
SW4
(6)
(4)
(2)
(11)
DIR
IC810
LC89055W
CKOUT (13)
BCK (14)
LRCK (15)
DATA0 (16)
XMCK (20)
X' TAL
DIR IN
AD IN
SW1 ON OFF
SW2 ON OFF
SW3 ON OFF
SW4 OFF ON
SW5 OFF ON
SW6 OFF ON

EVEL DIAGRAM

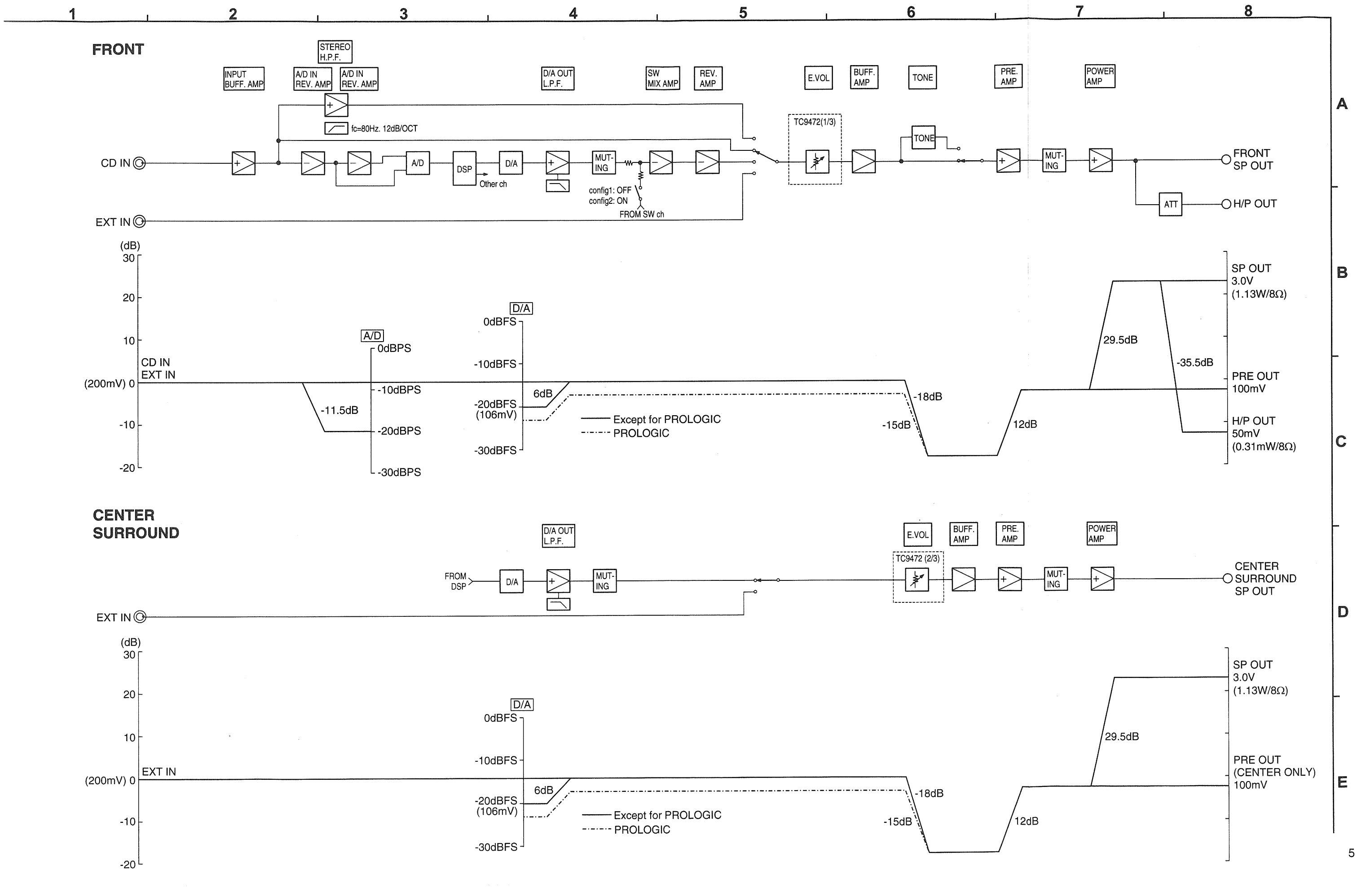

SUBWOOFER

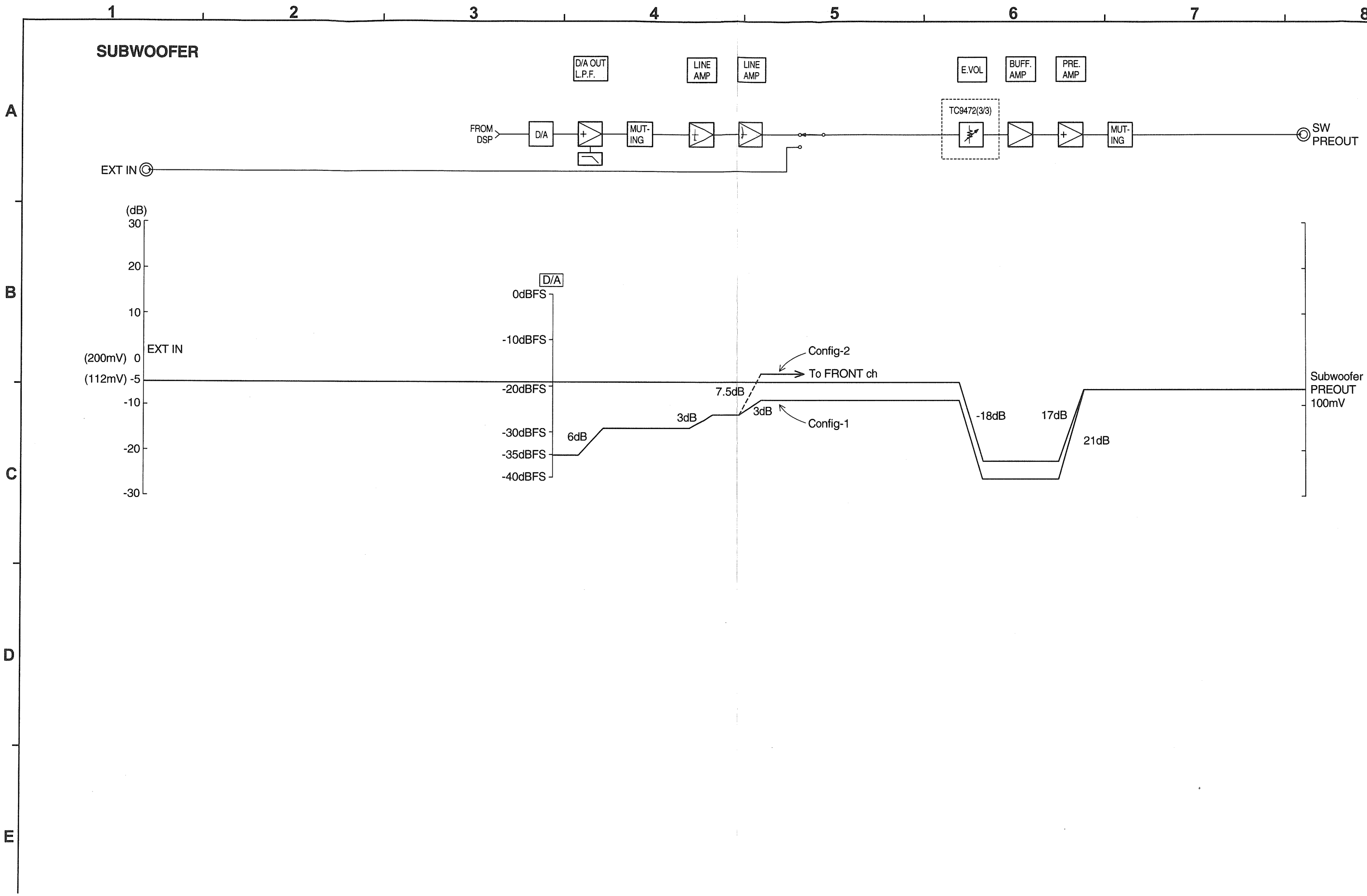
1
2
3
4
5
6
7
8
A
B
C
D
E
D/A OUT L.P.F.
LINE AMP
LINE AMP
E.VOL
BUFF. AMP
PRE. AMP
TC9472(3/3)
FROM DSP
D/A
MUT-ING
MUT-ING
SW PREOUT
EXT IN
(dB)
30
20
10
(200mV) 0
(112mV) -5
-10
-20
-30
EXT IN
D/A
0dBFS
-10dBFS
-20dBFS
-30dBFS
-35dBFS
-40dBFS
6dB
3dB
7.5dB
3dB
Config-2
To FRONT ch
Config-1
-18dB
17dB
21dB
Subwoofer PREOUT 100mV

ADJUSTMENT

Tuner Section

CONNECTION DIAGRAM OF MEASURING INSTRUMENTS

● FM

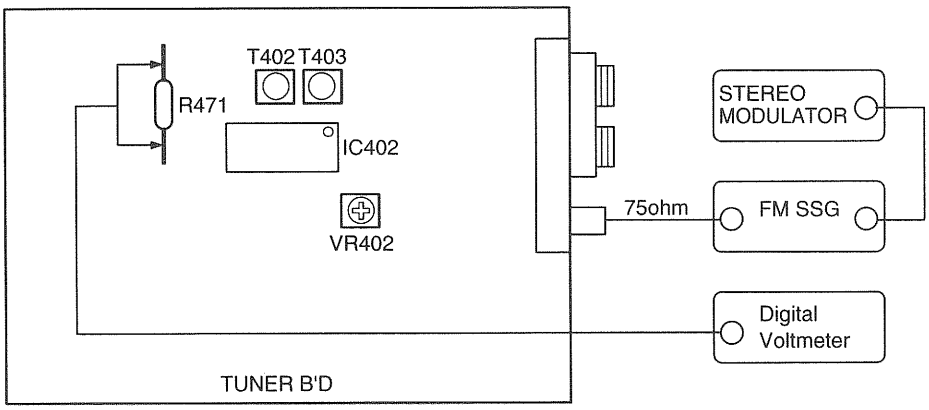

FM ALIGNMENT

Step	Alignment Item	Tuning Frequency Setting	Input					Output		Adjustment	
			Type	Frequency	Input Level	Modulation	Coupling	Type	Connect to	Points	Adjust to
1	Center Adjustment	98.1MHz (98.0MHz)	FM SSG	98.1MHz	60dBμ	—	Antenna Terminal	Digital Voltmeter	R471	T402	± 50mV
2	Distortion	98.1MHz (98.0MHz)	FM SSG	98.1MHz	60dBμ	Mono 1kHz 100%	Antenna Terminal	Distortion Meter	Output Terminal (L)	T403	Minimum Distortion
3	Repeat Steps 1 and 2										
4	Signal Level	98.1MHz (98.0MHz)	FM SSG	98.1MHz	20dBμ	OFF	Antenna Terminal	Light "TUNED" on FL Display		VR402	20^{+14}_{-10}dB

● AM

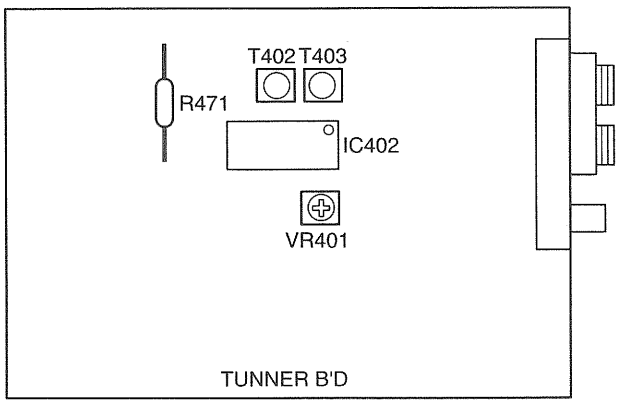

AM ALIGNMENT

Step	Alignment Item	Frequency	Input	Output		Adjustment		Remarks
				Type	Connect to	Points	Adjust to	
1	Signal Level	999 (1000) kHz	AM SSG	—	—	VR401	Light "TUNED" on FL Display	SSG OUTPUT 74dBμ (EMF)

Audio Section

Idling Current

Required measurement equipment : DC Voltmeter

Preparation

(1) Avoid direct blow from an air conditioner or an electric fan, and adjust the unit at normal room tempereture 15 °C ~ 30 °C (59 °F ~ 86 °F).

(2) Presetting
- POWER (Power sourse switch) → OFF
- SPEAKER (Speaker terminal) → No load (Do not connect speaker, dummy resistor, etc.)

Adjustment

(1) Remove top cover and set VR101, VR102, VR103, VR104, VR105 on Amp. Unit at full counterclockwise (◯) position.

(2) Connect DC Voltmeter to test points (FRONT-Lch: TP101, FRONT-Rch: TP102, CENTER ch: TP103, SURROUND-Lch: TP104, SURROUND-Rch: TP105).

(3) Connect power cord to AC Line, and turn power switch "ON".

(4) Presetting. MASTER VOLUME : "---" counterclockwise (◯ min.)
MODE : 5CH STEREO
FUNCTION : CD

(5) Within 2 minutes after the power on, turn VR101 clockwise (◯) to adjust the TEST POINT voltage to 1.5 mV ±0.5 mV DC.

(6) After 10 minutes from the preset above, turn VR101 to set the voltage to 2 mV ±0.5 mV DC.

(7) Adjust the Variable Resistors of other channels in the same way.

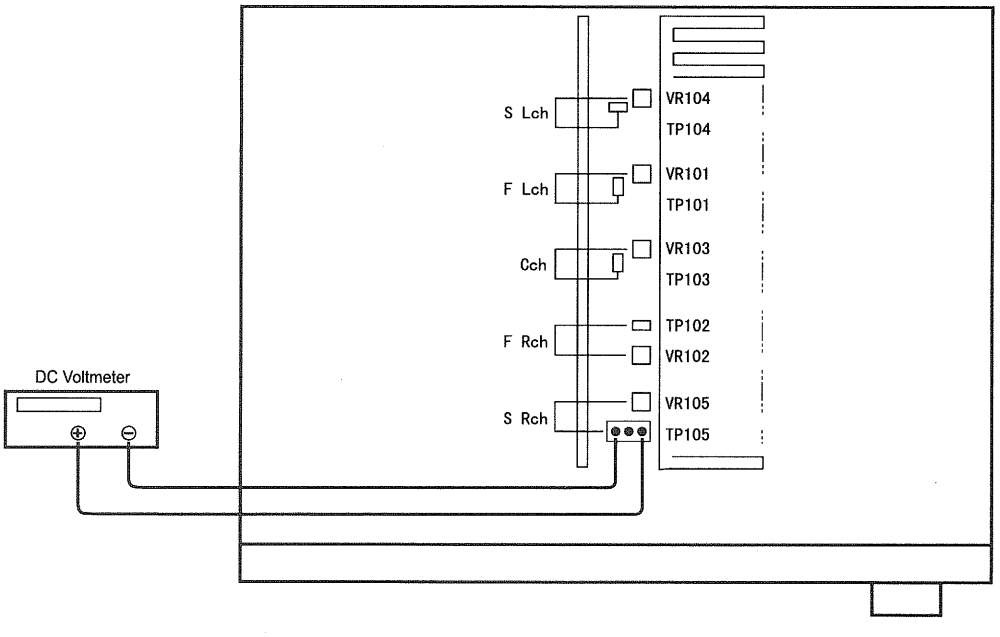

SEMICONDUCTORS

● ICs

CS492604-CLR (IC812)

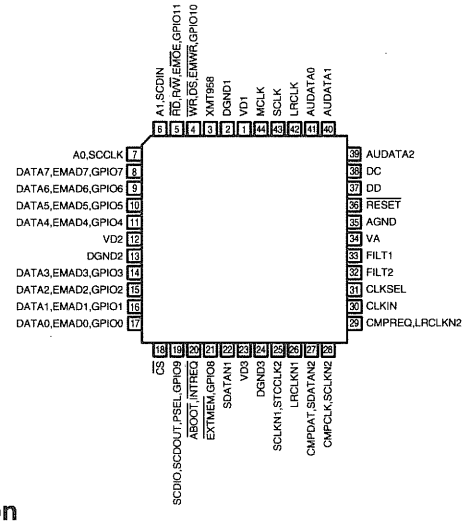

CS492604-CLR Terminal Function

Pin No.	Pin Name	Function
1	VD1	Digital positive supply
2	DGND1	Digital supply ground
3	XMT958	SPDIF transmitter output
4	$\overline{WR}$, $\overline{DS}$, $\overline{EMWR}$, GPIO10	Host write strobe or host data strobe or external memory write enable or general purpose input & output number 10
5	$\overline{RD}$, R/$\overline{W}$, $\overline{EMOE}$, GPIO11	Host parallel output enable or host parallel R/$\overline{W}$ or external memory output enable or general purpose input & output number11
6	A1, SCDIN	Host address bit one or SPI serial control data input
7	A0, SCCLK	Host parallel address bit zero or serial control port clock
8	DATA7, EMAD7, GPIO7	
9	DATA6, EMAD6, GPIO6	
10	DATA5, EMAD5, GPIO5	
11	DATA4, EMAD4, GPIO4	
12	VD2	Digital positive supply
13	DGND2	Digital supply ground
14	DATA3, EMAD3, GPIO3	
15	DATA2, EMAD2, GPIO2	
16	DATA1, EMAD1, GPIO1	
17	DATA0, EMAD0, GPIO0	
18	$\overline{CS}$	Host parallel chip select, host serial SPI chip select
19	SCDIO, SCDOUT, PSEL, GPIO9	Serial control port data input and output, parallel port type select
20	$\overline{INTREQ}$, $\overline{ABOOT}$	Control port interrupt request, automatic boot enable
21	$\overline{EXTMEM}$, GPIO8	External memory chip select or general purpose input & output number 8
22	SDATAN1	PCM audio data input number one
23	VD3	Digital positive supply
24	DGND3	Digital supply ground
25	SCLKN1, STCCLK2	PCM audio input bit clock
26	LRCLKN1	PCM audio input sample rate clock
27	CMPDAT, SDATAN2	PCM audio data input number two
28	CMPCLK, SCLKN2	PCM audio input bit clock
29	CMPREQ, LRCLKN2	PCM audio input sample rate clock
30	CLKIN	Master clock input
31	CLKSEL	DSP clock select
32	FILT2	Phase locked loop filter
33	FILT1	Phase locked loop filter
34	VA	Analog positive supply
35	AGND	Analog supply ground
36	$\overline{RESET}$	Master reset input
37	DD	Reserved
38	DC	Reserved
39	AUDATA2	Digital audio output 2
40	AUDATA1	Digital audio output 1
41	AUDATA0	Digital audio output 0
42	LRCLK	Audio output sample rate clock
43	SCLK	Audio output bit clock
44	MCLK	Audio master clock

LC89055W (IC810)

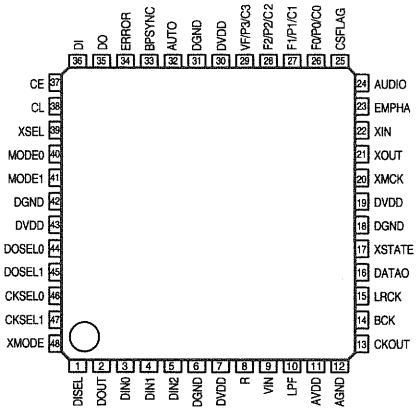

LC89055W Terminal Function

Pin No.	Pin Name	I/O	Function
1	DISEL	I	Data input terminal (select input pin of DIN0, DIN1)
2	DOUT	O	Input bi-phase data through output terminal
3	DIN0	I	Amp built-in coaxial/optical input correspond data input terminal
4	DIN1	I	Amp built-in coaxial/optical input correspond data input terminal
5	DIN2	I	Optical input correspond data input terminal
6	DGND		Digital GND
7	DVDD		Digital power supply
8	R	I	VCO gain control input terminal
9	VIN	I	VCO free-run frequency setting input terminal
10	LPF	O	PLL loop filter setting terminal
11	AVDD		Analog power supply
12	AGND		Analog GND
13	CKOUT	O	Clock output terminal (256fs, 384fs, 512fs, X'tal osc., VCO free-run osc.)
14	BCK	O	64fs clock output terminal
15	LRCK	O	fs clock output terminal (L: Rch, H: Lch, I²S: Reverse)
16	DATAO	O	Data output terminal
17	XSTATE	O	Input data detecting result output terminal
18	DGND		Digital GND
19	DVDD		Digital power supply
20	XMCK	O	X'tal osc. clock output terminal (24.576MHz or 12.288MHz)
21	XOUT	O	X'tal osc. connection output terminal
22	XIN	I	X'tal osc. connection input terminal, external signal input possible (24.576MHz or 12.288MHz)
23	EMPHA	O	Emphasis information output terminal of channel status
24	AUDIO	O	Bit1 output terminal of channel status
25	CSFLAG	O	Top 40bit revise flag output terminal of channel status
26	F0/P0/C0	O	Input fs cal. sig. out/data type out/input word inf. output terminal
27	F1/P1/C1	O	Input fs cal. sig. out/data type out/input word inf. output terminal
28	F2/P2/C2	O	Input fs cal. sig. out/data type out/input word inf. output terminal
29	VF/P3/C3	O	Validity flag out/data type out/input word inf. output terminal
30	DVDD		Digital power supply
31	DGND		Digital GND
32	AUTO	O	Non PCM burst data transfer detect sig. output terminal
33	BPSYNC	O	Non PCM burst data preamble Pa, Pb, Pc, Pd sync sig. output terminal
34	ERROR	O	PLL lock error, data error flag output terminal
35	DO	O	CPU/IFD read data output terminal
36	DI	I	CPU I/F write data input terminal
37	CE	I	CPU I/F chip enable input terminal
38	CL	I	CPU I/F chip enable input terminal
39	XSEL	I	Frequency select input pin of XIN X'tal osc. (24.576MHz or 12.288MHz)
40	MODE0	I	Mode setting input terminal
41	MODE1	I	Mode setting input terminal
42	DGND		Digital GND
43	DVDD		Digital power supply
44	DOSEL0	I	Data output format select input terminal
45	DOSEL1	I	Data output format select input terminal
46	CKSEL0	I	Output clock select input terminal
47	CKSEL1	I	Output clock select input terminal
48	XMODE	I	Reset input terminal

• For latch-up countermeasure, set digital (DVDD) and analog (AVDD) power on/off in the same timing.

AK4527VQ (IC813)

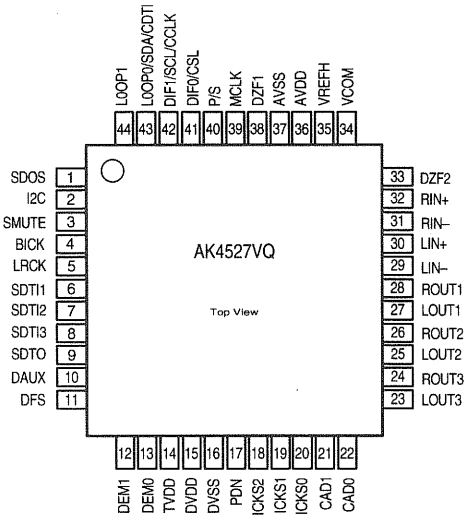

AK4527VQ Terminal Function

Pin No.	Pin Name	I/O	Function
1	SDOS	I	SDTO source select pin, L: Internal ADC output, H: DAUX input
2	I2C	I	Serial control mode select pin, L: 3-core serial, H: I²C bus
3	SMUTE	I	Soft mute pin, H: Soft mute start, L: Release
4	BICK	I	Audio serial data clock pin
5	LRCK	I	Input channel clock pin
6	SDTI1	I	DAC1 audio serial data input pin
7	SDTI2	I	DAC2 audio serial data input pin
8	SDTI3	I	DAC3 audio serial data input pin
9	SDTO	O	Audio serial data output pin
10	DAUX	I	Auxiliary audio serial data input pin
11	DFS	I	Double speed sampling mode pin, L: Normal, H: Double
12	DEM1	I	De-emphasis-1 pin
13	DEM0	I	De-emphasis-2 pin
14	TVDD	—	Power pin for output buffer, 2.7V~5.5V
15	DVDD	—	Digital power pin, 4.5V~5.5V
16	DVss	—	Digital GND pin, 0V
17	PDN	I	Power down & reset pin, L: Powered-down and register initialized, Reset with PDN when switching CAD0-1
18	ICKS2	I	Input clock select-2 pin
19	ICKS1	I	Input clock select-1 pin
20	ICKS0	I	Input clock select-0 pin
21	CAD1	I	Chip address-1 pin
22	CAD0	I	Chip address-0 pin
23	LOUT3	O	DAC3L channel analog out pin
24	ROUT3	O	DAC3R channel analog out pin
25	LOUT2	O	DAC2L channel analog out pin
26	ROUT2	O	DAC2R channel analog out pin
27	LOUT1	O	DAC1L channel analog out pin
28	ROUT1	O	DAC1R channel analog out pin
29	LIN-	I	L-ch analog inverted input pin
30	LIN+	I	L-ch analog non-inverted input pin
31	RIN-	I	R-ch analog inverted input pin
32	RIN+	I	R-ch analog non-inverted input pin
33	DZF2	O	0 input detect 2 pin, H: Input data of G2 is 8192 times "0" in a raw or RSTN bit "0", L: When P/S= "0"
34	VCOM	O	Common V-out pin, AVDD/2, connect large capacitor to avoid noise
35	VREFH	I	Ref. V input pin, AVDD
36	AVDD	—	Analog GND pin, 4.5V~5.5V
37	AVss	—	Analog GND pin, 0V
38	DZF1	O	0 input detect pin, H: Input data of G1 is 8192 times "0" in a raw or RSTN bit "0", L: When P/S= "0"
39	MCLK	I	Master clock input pin
40	P/S	I	Parallel/Serial select pin, L: Serial control
41	DIF0	I	Audio data I/F format 0 pin (parallel control)
	CSN	I	Chip select pin (3-wire serial control), connect to DVDD when I²C bus control
42	DIF1	I	Audio data I/F format 1 pin (parallel control)
	SCL/CCLK	I	Control data clock pin (serial control), I²C="L": CCLK (3-wire serial), I²C="H": SCL (I²C bus)
43	LOOP0	I	Loop back mode 0 pin (parallel control), effects digital loop back ADC to all DAC
	SDA/CDTI	I/O	Control data input pin (serial control), I²C="L": CCTI (3-wire serial), I2C="H" SDA (I²C bus)
44	LOOP1	I	Loop back mode 1 pin, from SDT1 to all DAC

LC75721E (C301)

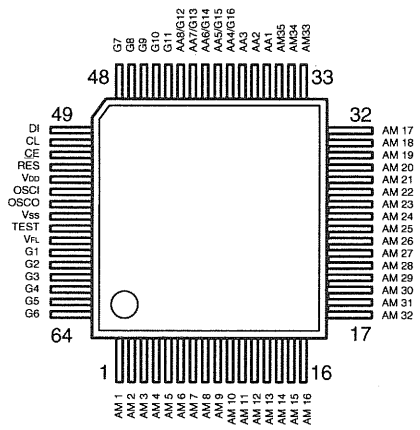

LC75721E Terminal Function

Symbol	Function
V_{DD}	Power terminal +5V
Vss	Power terminal GND
V_{FL}	Power terminal FL drive
DI CL CE	Serial data transfer terminal DI: Data CL: Clock CE: Chip enable
OSCI OSCO	External CR connecting terminal
$\overline{RES}$	System reset terminal
AM1~AM35 AA1~AA3	Anode output terminal
AA4/G16 AA5/G15 AA6/G14 AA7/G13 AA8/G12	Anode/Grid output terminal
G1~G11	Grid output terminal
TEST	LSI test terminal

KIC9164AN(IC203)

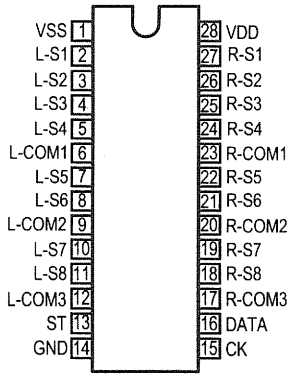

TC9273N-007(IC701)

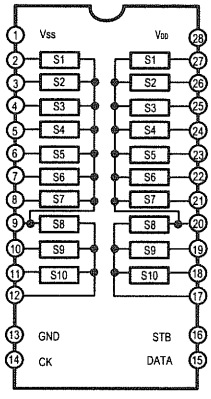

TC9273N Terminal Function

Pin No	Symbol	Name	Function	
1	Vss	+Power Terminal	Dual Power Use:VDD = 8.0~17 V Single Power Use:VDD = 8.0~18V	
13	GND	Digital Ground	GND=0V GND=0V	
28	V_{DD}	+Power Terminal	Vss=-8.0~-17V	
2~12 12~27	S1~S10	I/O Terminal	Input terminal of analog switch.	
14	CK	Clock Input	Clock input for data transfer.	Low level Border Input Terminal
15	DATA	Data Input	Serial input for switch setting.	
16	STB	Strobe Input	Strobe InputStrobe input for data writing.	

W27C020(IC807)

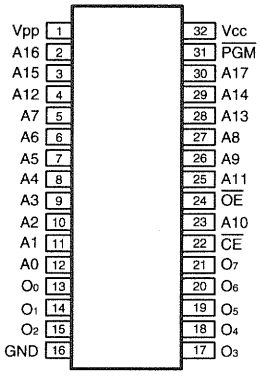

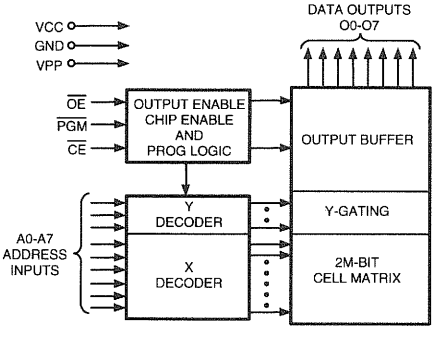

NJM2068DD
(IC205~210, 551, 702~704, 814~816)
BA4510F(IC805, 806)

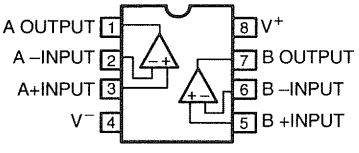

SN74LV00APW(IC822)

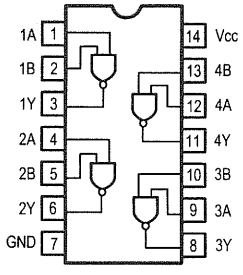

MC74HCU04AD(IC803)

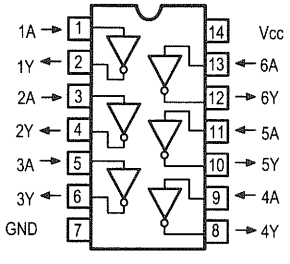

KIA78R05PI (IC653)

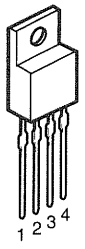

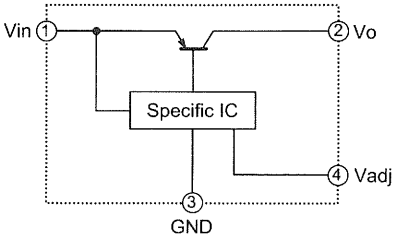

LC72131M (IC401)

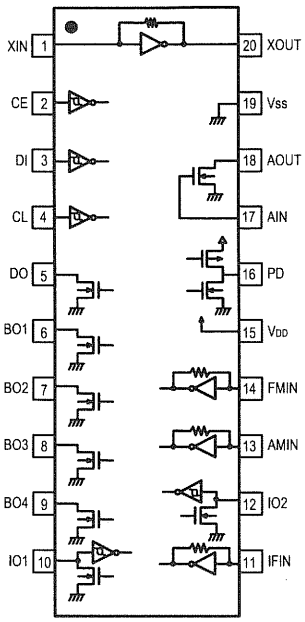

LA1266 (IC402)

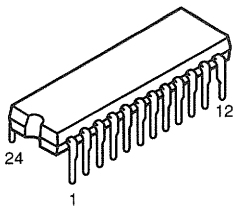

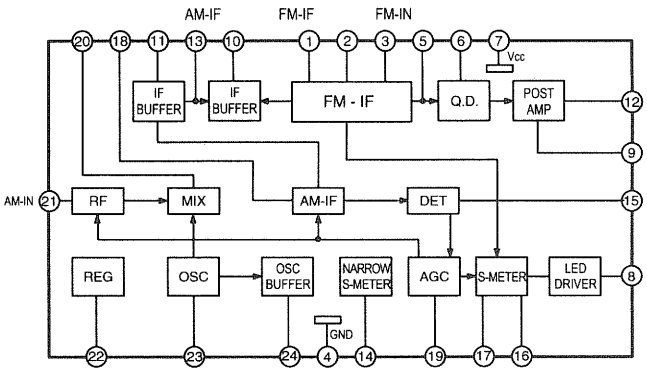

LA3401 (IC403)

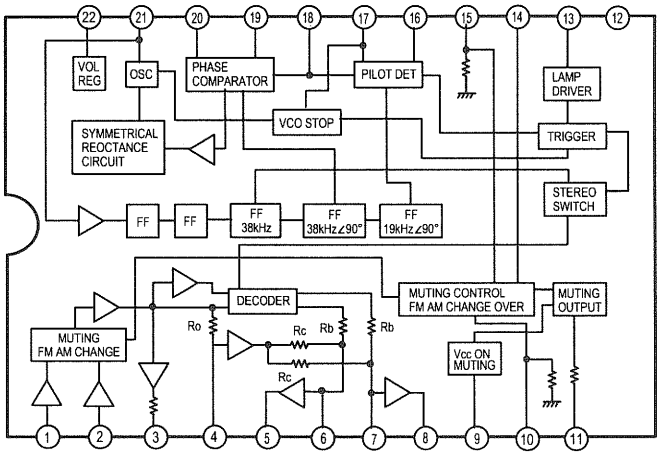

TC9184AP (IC552)

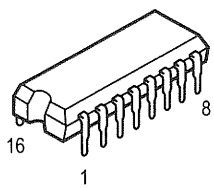

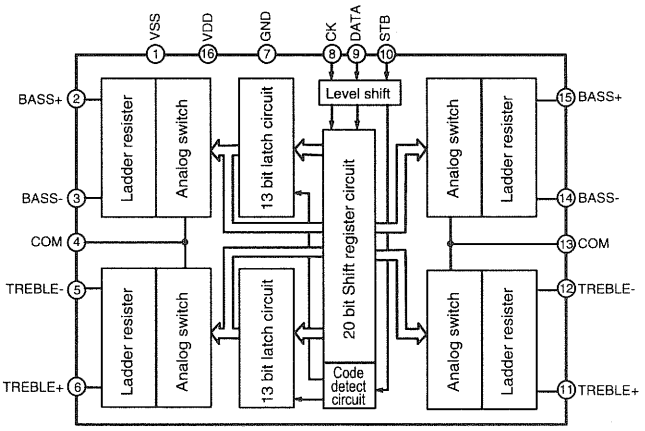

BA7625 (IC601, 651, 652)

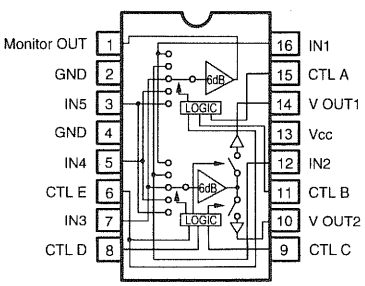

A	B	E	MONITOR OUT
L	L	*	IN 1
H	L	*	IN 2
L	H	*	IN 3
H	H	L	IN 4
H	H	H	IN 5

C	D	E	V OUT 1
L	L	*	—
H	L	*	IN 2
L	H	*	IN 3
H	H	L	IN 4
H	H	H	IN 5

C	D	E	V OUT 2
L	L	*	IN 1
H	L	*	—
L	H	*	IN 3
H	H	L	IN 4
H	H	H	IN 5

Note 1: * mark means that feasible for either H or L.
Note 2: Each input terminal is provided with sink chip clamp (BA7625).
Each input terminal takes 20kohm at the end (BA7626).

SN74LV4040 (IC831)

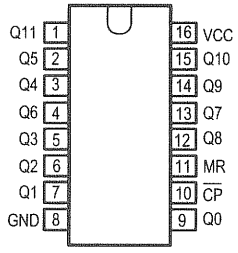

Terminal Function

INPUTS		OUTPUTS
$\overline{CP}$	MR	Qn
↑	L	no change
↓	L	count
X	H	L

H=HIGH voltage level
L=LOW voltage level
X=don't care
↑=LOW-to-HIGH clock transition
↓=HIGH-to-LOW clock transition

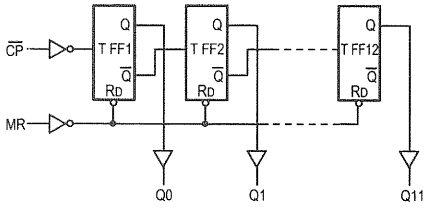

KIA7805 (IC104)
KA7815 (IC101)

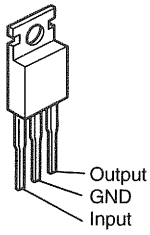

NJM7805FA (S)
(IC103, 829)

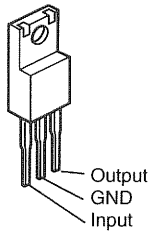

KIA7915 (IC102)

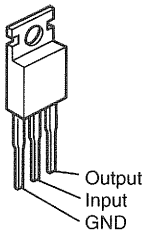

BA033FP (IC811)

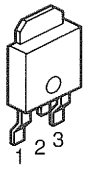

PC74HC4094 (IC302, 602)

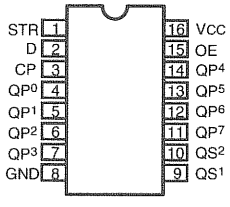

TC74HC125D (IC821)

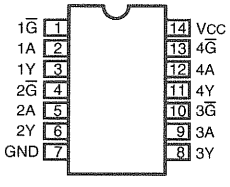

PC74HCT574 (IC808,809)

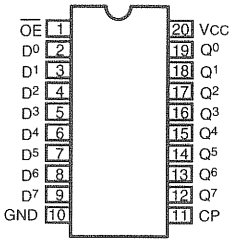

DC74HCT244 (IC828,830)

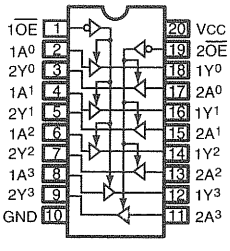

● IC PROTECTOR

ICP-N15 (IC105)

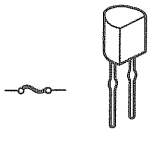

● POSISTOR

P43T7D330BW16

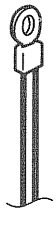

● OPTICAL OUT

GP1F37R1 (IC801, 802)

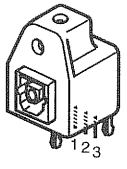

1. Vcc
2. GND
3. Vout

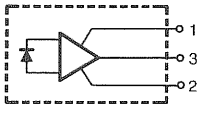

● IR SENSOR

NJL64H380A(RMC301)

1: VOUT
2: GND
3: Vcc

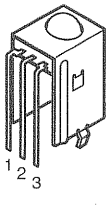

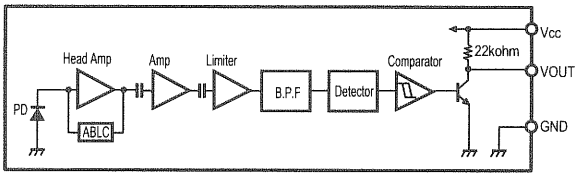

1 2 3 4 5 6 7 8

DSP P.W.B. ASS'Y

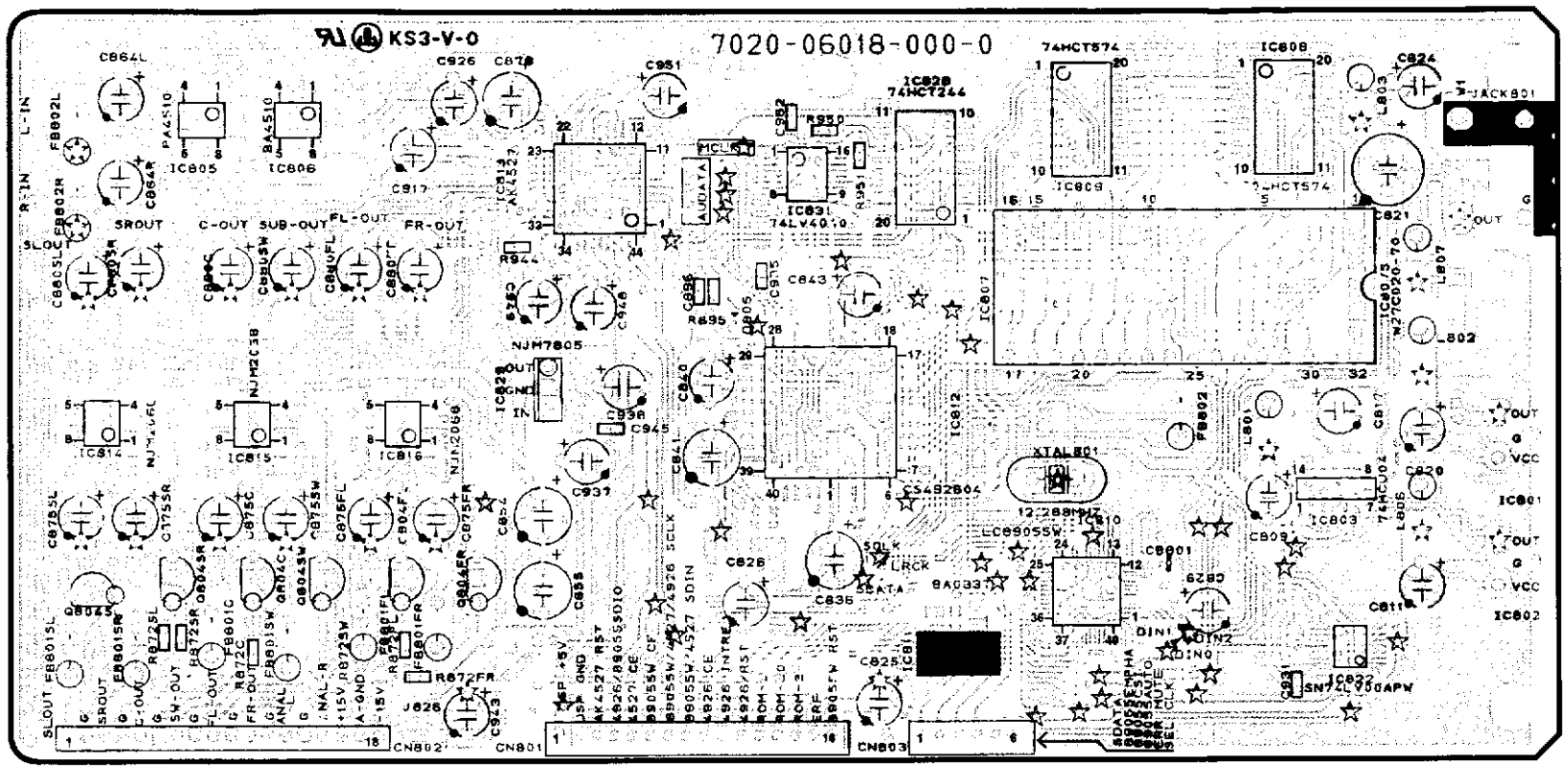

COMMPONENT SIDE

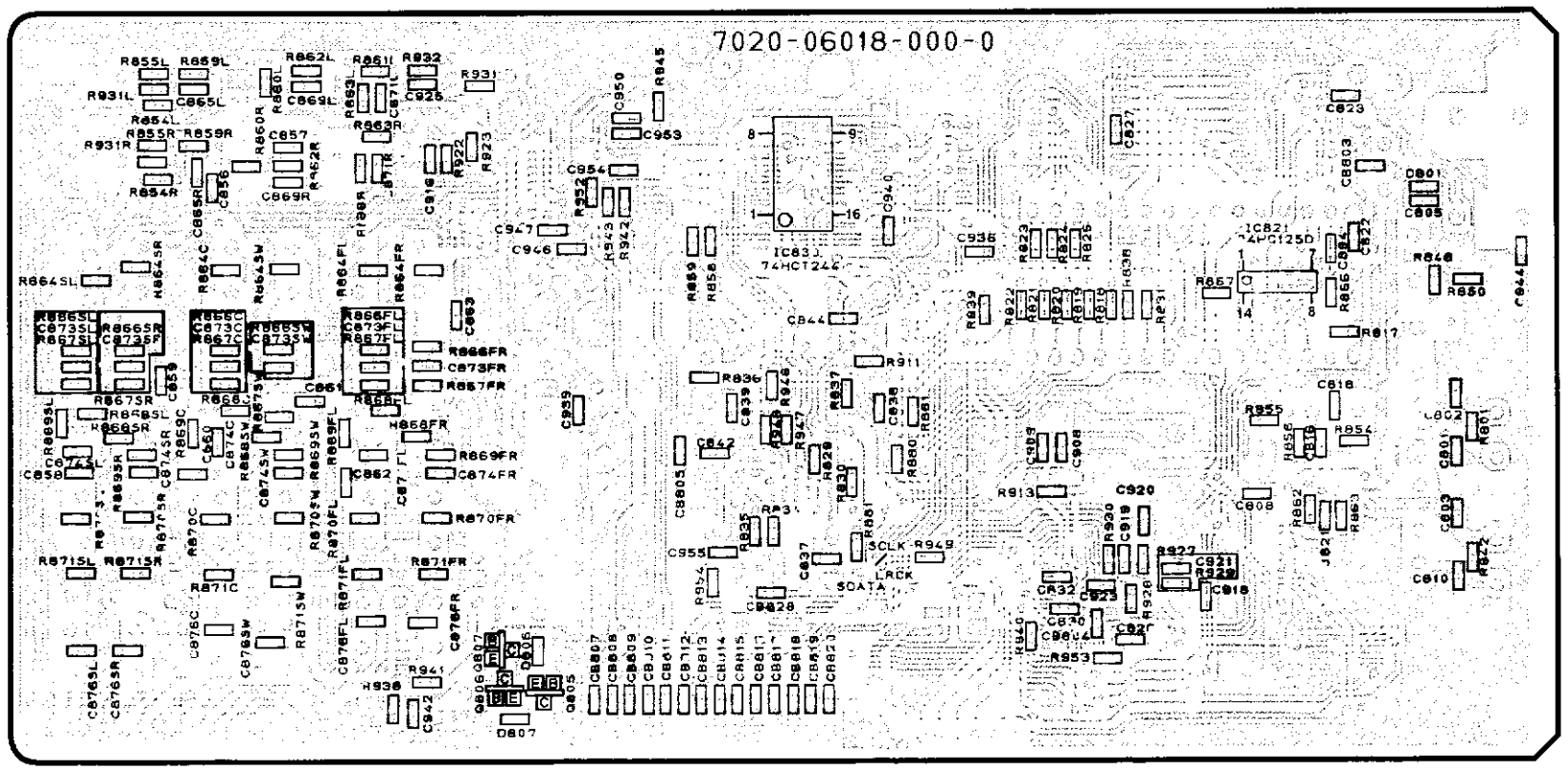

FOIL SIDE

VOLTAGE SEL. P.W.B. ASS'Y

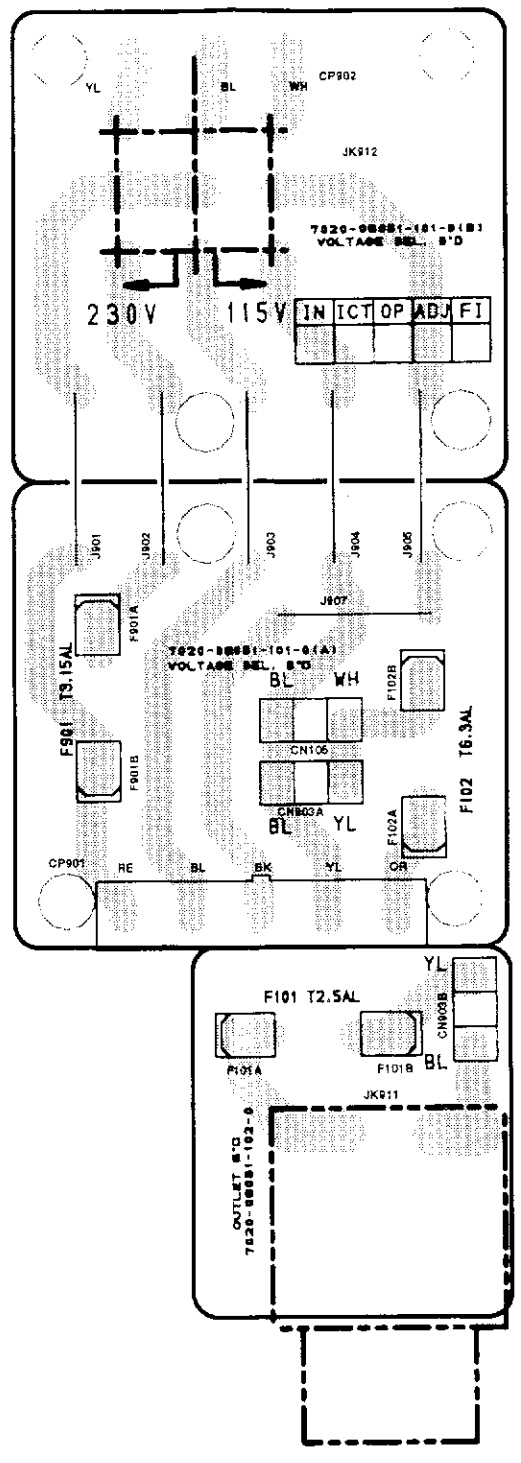

COMMPONENT SIDE

NOTE FOR PARTS LIST

- Part indicated with the mark "⊙" are not always in stock and possibly to take a long period of time for supplying, or in some case supplying of part may be refused.
- When ordering of part, clearly indicate "1" and "I" (i) to avoid mis-supplying.
- Ordering part without stating its part number can not be supplied.
- Part indicated with the mark "★" is not illustrated in the exploded view.
- Not including Carbon Film ±5%, 1/4W Type in the P.W.Board parts list. (Refer to the Schematic Diagram for those parts.)

WARNING:

Parts marked with this symbol ⚠ [redacted] have critical characteristics.
Use ONLY replacement parts recommended by the manufacturer.

• Resistors

Ex.: RN 14K 2E 182 G FR

Type	Shape and performance	Power	Resistance	Allowable error	Others

RD : Carbon	2B : 1/8W	F : ±1%		P : Pulse-resistant type	
RC : Composition	2E : 1/4W	G : ±2%		NL : Low noise type	
RS : Metal oxide film	2H : 1/2W	J : ±5%		NB : Non-burning type	
RW : Winding	3A : 1W	K : ±10%		FR : Fuse-resistor	
RN : Metal film	3D : 2W	M : ±20%		F : Lead wire forming	
RK : Metal mixture	3F : 3W				
	3H : 5W				

Resistance

1 8 2 ⇒ 1800 ohm ± 1.8 kohm
- 2-digit effective number.
- Indicates number of zeros after effective number.

• Units: ohm

1 R 2 ⇒ 1.2 ohm
- 1-digit effective number.
- 2-digit effective number, decimal point indicated by R.

• Units: ohm

• Capacitors

Ex.: CE 04W 1H 2R2 M BP

Type	Shape and performance	Dielectric strength	Capacity	Allowable error	Others

CE : Aluminum foil electrolytic	0J : 6.3V	F : ±1%		HS : High stability type	
CA : Aluminum solid electrolytic	1A : 10V	G : ±2%		BP : Non-polar type	
CS : Tantalum electrolytic	1C : 16V	J : ±5%		HR : Ripple-resistant type	
CQ : Film	1E : 25V	K : ±10%		DL : For change and discharge	
CK : Ceramic	1V : 35V	M : ±20%		HF : For assuring high frequency	
CC : Ceramic	1H : 50V	Z : +80% −20%		U : UL part	
CP : Oil	2A : 100V	P : +100% −0%		C : CSA part	
CM : Mica	2B : 125V	C : ±0.25pF		W : UL-CSA type	
CF : Metallized	2C : 160V	D : ±0.5pF		F : Lead wire forming	
CH : Metallized	2D : 200V	= : Others			
	2E : 250V				
	2H : 500V				
	2J : 630V				

*** Capacity (electrolyte only)**

2 2 2 ⇒ 2200µF
- Indicates number of zeros after effective number
- 2-digit effective number.

• Units: µF.

2 R 2 ⇒ 2.2µF
- 1-digit effective number.
- 2-digit effective number, decimal point indicated by R

• Units: µF.

*** Capacity (except electrolyte)**

2 2 2 ⇒ 2200pF=0.0022µF
- (More than 2) — Indicates number of zeros after effective number.
- 2-digit effective number.

• Units: µF.

2 2 1 ⇒ 220pF
- (0 or 1) — Indicates number of zeros after effective number.
- 2-digit effective number.

• Units: pF.

• When the dielectric strength is indicated in AC, "AC" is included after the dieelectric strength value.

PARTS LIST OF P.W.B. UNIT

MAIN P.W.B. UNIT

Note: The symbols in the column "Remarks" indicate the following destinations.
E3: U.S.A. model, Csnada mode: E1C: China model
EU: U.S.A. model (AVR-881) E1H: Hong Kong model
E2: Europe mode: E1T: Taiwan R.O.C. model
E1: Asia model

Ref. No.	Part No.	Part Name	Remarks
SEMICONDUCTORS GROUP			
IC101	963 0057 903	IC KIA7815AP	J126781500060
IC102	963 0044 806	IC NJM7915FA	J126791500010
IC103	960 0196 001	IC NJM7805FA (S)	J126780500130
IC104	963 0057 709	IC KIA7805AP	J126780500360
IC105	960 0195 808	IC protector ICP-N15	J120001500030
IC701	960 0174 308	IC TC9273N-007	J080927300000
IC702~704	960 0174 502	IC NJM2068DD	J121206800000
Q104C,FL, FR,SL,SR	960 0196 506	Transistor KSC1845F	J5021845F0000
Q111~116	960 0196 409	Transistor 2SC1740SR	J5021740S0010
Q117	960 0196 904	Transistor DTC114YS (NPN)	J6020114Y0050
			for E3,EU,E1,E1H,E1T
Q161	960 0196 409	Transistor 2SC1740SR	J5021740S0010
Q171	960 0005 202	Transistor KTC3198 (Y)	J5023198Y0000
Q171A,B,C	960 0196 302	Transistor KTA1268BL	J5001268B0050
Q172~177	960 0005 202	Transistor KTC3198 (Y)	J5023198Y0000
Q178	960 0005 105	Transistor KTA1266Y	J5001266Y0050
Q179	960 0189 005	Transistor KSA916Y	J5000916Y0050
Q180,181	960 0196 302	Transistor KTA1268BL	J5001268B0050
D101~105	963 0020 309	Diode 1SS133T	K000013300520
D121~126	963 0020 309	Diode 1SS133T	K000013300520
D131A,131B	960 0197 107	Diode KBPC604	K047604000020
D132	963 0020 309	Diode 1SS133T	K000013300520
D133,134	963 0046 202	Zener diode MTZJ18B	K06018R044520
D135	963 0020 309	Diode 1SS133T	K000013300520
D136	963 0058 504	Zener diode MTZJ11B	K06011R044520
D137	963 0020 309	Diode 1SS133T	K000013300520
D138	960 0117 608	Diode 1N4004A	K040400400520
D141~146	960 0117 608	Diode 1N4004A	K040400400520
D148	963 0020 309	Diode 1SS133T	K000013300520
D149,150	960 0117 608	Diode 1N4004A	K040400400520
D151	963 0020 309	Diode 1SS133T	K000013300520
D152,153	960 0117 608	Diode 1N4004A	K040400400520
D154	963 0047 405	Zener diode MTZJ7.5B	K06007R544520
D157	960 0014 905	Zener diode MTZJ20B	K06020R044520
			for E3,EU,E1,E1H,E1T
D158~160	963 0020 309	Diode 1SS133T	K000013300520
D25,252	960 0197 000	Diode KDS160	K005016000010
D253,254	960 0197 000	Diode KDS160	K005016000010
D255,256	960 0197 000	Diode KDS160	K005016000010
RESISTORS GROUP			
R104C,FL, FR,SL,SR, R105C,FL, FR,SL,SR	244 2052 957	Metal oxide 5 6kohm 1W	RS14B3A562JNBST(S)
R106C,FL, FR,SL,SR,	963 0047 900	Metal film 4.7 ohm 1W	C0604R7065050

Ref. No.	Part No.	Part Name	Remarks
R107C,FL, FR,SL,SR			
R108C,FL, FR,SL,SR,	244 2043 982	Metal oxide 0.22ohm 1W	RS14B3AR22JNBST(S
R109C,FL, FR,SL,SR,			
R110C,FL, FR,SL,SR,			
R111C,FL, FR,SL,SR			
R112C,FL, FR,SL,SR	963 9003 013	Metal film 1.8 kohm 1/4W (NB)	C060018243520
R114C,FL, FR,SL,SR		Metal film 2k ohm 1/4W	C06002026P520
R118C,FL, FR,SL,SR,	244 2043 937	Metal oxide 10ohm 1W	RS14B3A100JNBST(S)
R119C,FL, FR,SL,SR			
R135,136	963 0045 203	Winding 0.1 ohm 5W	C144R10069110
R141,142	963 9003 039	Metal film 1 ohm 1/4W	C060001063050
R148,149	963 9003 039	Metal film 1 ohm 1/4W	C060001063050
R151		Metal film 68 ohm 1/4W	C060068063520
R154	963 0043 108	Metal film 2.2 Mohm 1/2W	C060022574000 for E3,EU
R155,156	963 9003 039	Metal film 1 ohm 1/4W	C060001063050
R179		Metal film 47 kohm 1/4W (NB)	C060047343520
R181	963 0047 900	Metal film 4.7 ohm 1W	C0604R7065050
R184	244 2043 937	Metal oxide 10ohm 1W	RS14B3A100JNBST(S)
R185	963 9003 039	Metal film 1 ohm 1/4W	C060001063050
R701L,R		Carbon chip 390 ohm 1/10W	C200039160200
R702L,R~ 708L,R		Carbon chip 470 ohm 1/10W	C200047160200
R709L,R		Carbon chip 68 kohm 1/10W	C200068360200
R710L,R~ 716L,R	963 9003 071	Carbon chip 2.7 Mohm 1/10W	C200027560200
R717L,R		Carbon chip 150 kohm 1/10W	C200015460200
R718L,R		Carbon chip 47 ohm 1/10W	C200047060200
R719L,R		Carbon chip 240 ohm 1/10W	C200024160200
R720L,R		Carbon chip 130 kohm 1/10W	C200013460200
R721L,R		Carbon chip 1 Mohm 1/10W	C200011360200
R722L,R,		Carbon chip 100 ohm 1/10W	C200010160200
R725L,R			
R726L,R		Carbon chip 100 kohm 1/10W	C200010460200
R728L,R		Carbon chip 39 kohm 1/10W	C200039360200
R729L,R		Carbon chip 100 ohm 1/10W	C200010160200
R730L,R		Carbon chip 100 kohm 1/10W	C200010460200
R731L,R,		Carbon chip 39 kohm 1/10W	C200039360200
R732L,R			
R737L,R		Carbon chip 22 ohm 1/10W	C200022060200
R751L,R		Carbon chip 100 kohm 1/10W	C200010460200

Ref. No.	Part No.	Part Name	Remarks
VR101~105	960 0091 601	Semi fixed resistor 1 kohm	C544102015130
CAPACITORS GROUP			
C101C,FL, FR,SL,SR		Electrolytic 47μF/50V	D040470087060
C102C,FL, FR,SL,SR		Electrolytic 10μF/50V	D040100087050
C103C,FL, FR,SL,SR, C104C,FL, FR,SL,SR	963 9003 084	Ceramic 100pF/500V	D00410106D050
C105C,FL, FR,SL,SR	960 9003 108	Ceramic 0.022μF/25V	D005223594520
C107C,FL, FR,SL,SR		Mylar film 0.1μF/250V	D02010407H080
C131~135		Mylar film 0.1μF/250V	D02010407H080
C136,137	960 0177 305	Electrolytic 10000μF/63V	D040103088380
C138		Electrolytic 1μF/50V	D040010087080
C141~143	963 0021 900	Mylar film 0.047μF/100V	D02047306C060
C144		Electrolytic 3300μF/10V	D040332085010
C145	963 9003 123	Electrolytic 1000μF/35V	D040102085040
C146		Electrolytic 1μF/50V	D040010087080
C148		Electrolytic 1μF/50V	D040010087080
C150~152	963 0021 900	Mylar film 0.047μF/100V	D02047306C060
C153	963 0021 104	Electrolytic 6800μF/16V	D040682083000
C154		Electrolytic 47μF/16V	D040470083100
C157		Electrolytic 1μF/50V	D040010087080
C158	963 9003 136	Electrolytic 1000μF/25V	D040102084060
C159		Electrolytic 1μF/50V	D040010087080
C161		Electrolytic 10μF/35V	D040100085050
C171		Electrolytic 100μF/10V	D040101082060
C171A,B,C	963 0020 202	Ceramic 0.1μF/50V	D005104597530
C172,173		Electrolytic 220μF/6.3V	D040221081230
C174		Electrolytic 10μF/50V	D040100087050
C175		Electrolytic 4.7μF/50V	D0404R7087100
C176,177		Electrolytic 1μF/50V	D040010087080
C178	963 9003 149	Electrolytic 330μF/63V	D040331088230
⚠C181	960 0177 208	Ceramic 0.0047μF/ 250V (AC)	D00847208K03D
C182		Electrolytic 10μF/100V	D04010008C050
C191~197		Ceramic 2200pF/16V	D005222773530 for E2
C198C,FL, FR,SL,SR, C199FL,FR	963 9003 194	Mylar film 0.0022μF/100V	D02022206C060 for E2
C251,252		Ceramic chip 0.01μF/50V	D011103777200
C701L,R		Ceramic chip 220pF/50V	D010221167200
C709L,R		Electrolytic 10μF/35V	D040100085100
C710L,R		Ceramic chip 100pF/50V	D010101167200
C711L,R		Electrolytic 220μF/6.3V	D040221081050
C712L,R		Mylar film 0.024μF/50V	D020243167050
C713L,R		Mylar film 0.0068μF/100V	D02068206C060
C714L,R		Electrolytic 4.7μF/50V	D0404R7087250
C715L,R		Ceramic chip 0.022μF/50V	D011223777200
C716L,R		Electrolytic 10μF/35V	D040100085100
C718L,R		Electrolytic 10μF/35V	D040100085100
C719L,R		Electrolytic 1μF/50V	D040010087080
C720L,R, C721L,R	963 9003 152	Mylar film 0.068μF/100V	D02068306C060
C723L,R		Electrolytic 10μF/35V	D040100085100
C724L,724R, C725,726		Ceramic chip 0.01μF/50V	D011103777200
C727,728		Electrolytic 4.7μF/50V	D0404R7087250
JR251		Ceramic chip 0.01μF/50V	D011103777200

OTHER PARTS GROUP				Q'ty
CN701	963 0046 707	16P connector base	L101352371610	1
CN702	963 0046 600	11P connector base	L101352371110	1
CP101	960 0197 505	2P connector base	L108202000220	1
CP102	960 0123 304	2P connector base	L104353280200	1
CP103	960 0128 901	3P connector base	L104353280300	1
CP104	960 0128 804	6P connector base	L102526700600	1
CP105	960 0123 304	2P connector base	L104353280200 for E2,E1,E1C, E1H,E1T	1
CP106	960 0123 207	3P connector base	L102526700300	1
CP501	963 0046 901	9P connector base	L101353360910	1
CP502~504	963 0048 608	5P connector base	L101353360510	3
CP505	963 0048 705	6P connector base	L101353360610	1
CP553	963 0048 802	20P connector base	L101353362010	1
CP901	963 0048 909	3P connector base	L101220030000	1
CP931	960 0123 304	2P connector base	L104353280200 for E2,E1,E1C, E1H,E1T	1
⚠F101	960 0188 705	Fuse 8A	G650802121060 for E3,EU	1
⚠F101	960 0142 606	Fuse 2.5A	G650252251160 for E2	1
⚠F101L,R	960 0005 804	Fuse clip	G645000050010 for E3,EU,E2,E1C	2
⚠F102	960 0188 705	Fuse 8A	G650802121060 for E3,EU	1
⚠F102	963 0044 709	Fuse 3.15A	G650312251160 for E2,E1C	1
⚠F102L,102R	960 0005 804	Fuse clip	G645000050010	2
GND101,102	960 9006 600	Terminal	3790040876010	2
JK101	960 0194 304	8P speaker terminal	G598041680020	1
JK102	960 0188 608	4P speaker terminal	G612041037310	1

Ref. No.	Part No.	Part Name	Remarks	Q'TY
JK103	960 0194 809	2P speaker terminal	G611021078110	1
⚠JK104	960 0187 803	AC outlet(2P)	G435204004010 for E3,EU	1
L101C,FL, FR,SL,SR	963 0049 005	Inductor 0.5μH	D330R50000000	5
L701L,R	235 9003 002	FTZ CHOKE COIL	D300700000030 for E2	2
LABEL	963 0059 914	FUSE LABEL(2A)	5527200040010 for E1C	1
RLY101~104	960 0181 702	Relay (G5PA-28 24V)	G680240502020	4
RLY105	960 0176 500	Relay (G5V-2 24V)	G680240501010	1
RLY106	960 0181 605	Relay (G5PA-1-8 12V)	G680120502010	1
TP101~105	960 0161 405	3P connector base	L101530140310	5
—	—	Heat sink	2120043538050	1
—	—	Heat sink	2120044308010	1
—	—	Capacitor cover	4310002640010 for E2,E1,E1C, E1H,E1T	1
⚠—	960 0185 708	Power trans. (Mini)	8200280960010 for E3,EU	1
⚠—	960 0185 711	Power trans. (Mini)	8201280000010 for E2	1
⚠—	960 0185 737	Power trans. (Mini)	8200350150030 for E1,E1H,E1T	1
⚠—	960 0185 724	Power trans. (Mini)	8200280909010 for E1C	1
—	963 0018 007	Screw (2S 3×8 ZNY/BH)	B020030081B10	3
—	960 0188 103	2P pin jack	G601020180000	1
—	960 0188 200	4P pin jack	G602040610000	2
—	960 0188 307	6P pin jack	G603060610010	1
—	—	Wire clamp	4330000120000	2

PROCESSOR P.W.B. UNIT

Ref. No.	Part No.	Part Name	Remarks
SEMICONDUCTORS GROUP			
IC201	963 0057 408	IC CXP740096-124Q	J020740096124
IC202	963 0057 602	IC TDA7330BD	J080733000010 for E2
IC203	960 0080 201	IC KIC9164AN E78M04	J040916400020
IC204	963 0043 603	IC KIC9482F	J084948200010
IC205~210	960 0174 502	IC NJM2068DD	J121206800000
IC301	960 0180 004	IC LC75721E	J127757210010
IC302	960 0195 400	IC PC74HC4094	J040744094020
RMC301	960 0181 100	IC NJL64H380A	E940643800000
Q201	269 0054 901	Transistor DTC144EK	J5220144E0210
Q202	963 0045 902	Transistor 2SC2412KT	J5222412K0210
Q203,204	960 0196 807	Transistor 2SK117Y	J5441170Y0050
Q205	269 0093 904	Transistor DTA144ES	J6000144E0010
Q206	269 0040 902	Transistor DTC144ES	J6020144E0010
Q207,208	960 0196 807	Transistor 2SK117Y	J5441170Y0050
Q209	269 0093 904	Transistor DTA144ES	J6000144E0010
Q210	269 0040 902	Transistor DTC144ES	J6020144E0010
Q211~213	960 0196 807	Transistor 2SK117Y	J5441170Y0050
Q214	269 0046 906	Transistor DTA114ES	J6000114E0010
Q215	269 0020 906	Transistor DTC114ES	J6020114E0010
Q216	269 0046 906	Transistor DTA114ES	J6000114E0010
Q300,301	269 0055 900	Transistor DTA144EK	J5200144E0210
Q302,304	269 0054 901	Transistor DTC144EK	J5220144E0210
Q305	269 0055 900	Transistor DTA144EK	J5200144E0210
Q306~314	269 0082 902	Transistor DTC114EK	J5220114E0210
D201	960 0197 000	Diode KDS160	K005016000010
D202	960 0117 608	Diode 1N4004A	K040400400520
D203	963 0020 309	Diode 1SS133T	K000013300520
D204,205	960 0197 000	Diode KDS160	K005016000010
D206	960 0197 000	Diode KDS160	K005016000010 for E2
D207	960 0197 000	Diode KDS160	K005016000010
D208,209	963 0020 309	Diode 1SS133T	K000013300520
D210~212	960 0197 000	Diode KDS160	K005016000010
D302~304	963 0020 309	Diode 1SS133T	K000013300520
D305~307	960 0197 000	Diode KDS160	K005016000010
ZD201	963 0047 502	Zener diode MTZJ3.3B	K06003R344520
ZD301	960 0095 801	Zener diode MTZJ6.8B	K06006R844520
ZD302,303	960 0095 704	Zener diode MTZJ6.2B	K06006R244520
ZD305,306	960 0095 704	Zener diode MTZJ6.2B	K06006R244520
LED301~307	960 0197 204	LED PI5-RD/HL50RDRF4T	K500052015010
LED308,309	960 0189 209	LED PI3-RD/HL-30RDRF3	K500032002080

Ref. No.	Part No.	Part Name	Remarks
RESISTORS GROUP			
R202		Carbon chip 1 kohm 1/10W	C200010260200
R204		Carbon chip 4.7 kohm 1/10W	C200047260200
R205		Carbon chip 10 kohm 1/10W	C200010360200
R206		Carbon chip 220 kohm 1/10W	C200022460200
R207		Carbon chip 10 kohm 1/10W	C200010360200
R209		Carbon chip 10 kohm 1/10W	C200010360200
R210FL,FR		Carbon chip 4.3 kohm 1/10W	C200043260200
R211		Carbon chip 10 kohm 1/10W	C200010360200
R212		Carbon chip 1 kohm 1/10W	C200010260200
R213FR, R214FL,FR		Carbon chip 15 kohm 1/10W	C200015360200
R215FL,FR		Carbon chip 100 ohm 1/10W	C200010160200
R216		Carbon chip 10 kohm 1/10W	C200010360200 for E3,EU,E2
R216FL,FR		Carbon chip 100 kohm 1/10W	C200010460200
R217		Carbon chip 15 kohm 1/10W	C200015360200 for E3,EU,E1,E1C,E1H,E1T
R217FL,FR		Carbon chip 6.2 kohm 1/10W	C200062260200
R218		Carbon chip 18 kohm 1/10W	C200018360200 for E2
R218		Carbon chip 10 kohm 1/10W	C200010360200 for E1,E1C,E1H,E1T
R220SW		Carbon chip 8.2 kohm 1/10W	C200082260200
R221SW		Carbon chip 3.6 kohm 1/10W	C200036260200
R222SW		Carbon chip 8.2 kohm 1/10W	C200082260200
R223,224		Carbon chip 10 kohm 1/10W	C200010360200 for E2
R223,224		Carbon chip 100 kohm 1/10W	C200010460200 for E3,EU,E1,E1C,E1H,E1T
R223SW		Carbon chip 100 ohm 1/10W	C200010160200
R224SW		Carbon chip 100 kohm 1/10W	C200010460200
R225		Carbon chip 2.2 Mohm 1/10W	C200022560200 for E2
R229,230	244 2051 961	Metal film 100 ohm 1W	C060010165060
R237		Carbon chip 1 kohm 1/10W	C200010260200
R239C,FL, FR,SL,SR,SW		Carbon chip 100 kohm 1/10W	C200010460200
R240C,FL, FR,SL,SR,SW		Carbon chip 100 ohm 1/10W	C200010160200
R241C,FL, FR,SL,SR,SW		Carbon chip 100 kohm 1/10W	C200010460200
R242C,FL, FR,SL,SR		Carbon chip 7.5 kohm 1/10W	C200075260200
R242SW		Carbon chip 6.8 kohm 1/10W	C200068260200
R243C,FL,FR		Carbon chip 10 kohm 1/10W	C200010360200
R244C,FL, FR,SL,SR		Carbon chip 1.3 kohm 1/10W	C200013260200
R244SW		Carbon chip 620 ohm 1/10W	C200062160200
R246C,SL, SR,SW		Carbon chip 100 kohm 1/10W	C200010460200
R247C,SL, SR,SW		Carbon chip 470 ohm 1/10W	C200047160200
R250		Carbon chip 470 kohm 1/10W	C200047460200
R255,256		Carbon chip 470 kohm 1/10W	C200047460200
R259		Carbon chip 10 kohm 1/10W	C200010360200
R261		Carbon chip 12 kohm 1/10W	C200012360200
R262		Carbon chip 10 kohm 1/10W	C200010360200
R263,264		Carbon chip 12 kohm 1/10W	C200012360200
R265~271		Carbon chip 470 ohm 1/10W	C200047160200
R273,274	244 2051 961	Metal film 100 ohm 1W	C060010165060
R317		Carbon chip 470 ohm 1/10W	C200047160200
R336		Carbon chip 4.7 kohm 1/10W	C200047260200
R337		Carbon chip 47 kohm 1/10W	C200047360200
R338		Carbon chip 470 ohm 1/10W	C200047160200
R339		Carbon chip 1 Mohm 1/10W	C200012260200
R340~348		Carbon chip 680 ohm 1/10W	C200068160200
R349FL		Carbon chip 56 kohm 1/10W	C200056360200
R350		Carbon chip 470 ohm 1/10W	C200047160200
R350FL~ 402FL		Carbon chip 56 kohm 1/10W	C200056360200
R407		Carbon chip 4.7 kohm 1/10W	C200047260200 for E2,E1,E1C,E1H,E1T
CAPACITORS GROUP			
BC201	963 0061 504	Electrolytic 8200µF/5.5V	D040822080010
C201		Electrolytic 100µF/10V	D040101082060
C201S		Ceramic 0.01µF/16V	D005103773530
C202,203		Ceramic chip 0.01µF/50V	D011103777200
C204		Electrolytic 4.7µF/50V	D0404R7087100
C205		Ceramic chip 0.1µF/50V	D011104777200 for E3,EU
C206		Electrolytic 47µF/16V	D040470083080 for E2
C207		Ceramic 0.01µF/16V	D005103773530 for E2
C208		Ceramic 270pF/50V	D005271277520 for E2
C209		Electrolytic 10µF/50V	D040100087050 for E2
C210		Ceramic chip 0.01µF/50V	D011103777200 for E2
C211		Ceramic chip 22pF/50V	D010220167200 for E2
C211SW		Ceramic chip 100pF/50V	D010101167200
C212		Ceramic chip 22pF/50V	D010220167200 for E2
C212SW		Ceramic chip 47pF/50V	D010470167200
C213~219		Ceramic chip 0.047µF/50V	D011473777200
C213FL,FR		Ceramic chip 100pF/50V	D010101167200
C218FL,FR		Ceramic chip 33pF/50V	D010330167200

Ref. No.	Part No.	Part Name	Remarks
C219FL,FR,		Electrolytic 10μF/35V	D040100085100
SW,C220		Electrolytic 10μF/35V	D040100085100
C221FL,FR,		Electrolytic 4.7μF/50V	D0404R7087100
C222SW,			
C223SL,SR			
C225,226		Ceramic chip 0.047μF/50V	D011473777200
C227		Electrolytic 10μF/35V	D040100085100
C228~230		Ceramic chip 100pF/50V	D010101167200
C230C,		Electrolytic 4.7μF/50V	D0404R7087100
C231C,SL,			
SR,SW			
C231~234		Ceramic chip 100pF/50V	D010101167200
C231FL,FR		Electrolytic 10μF/35V	D040100085100
C232C,FL,		Ceramic chip 56pF/50V	D010560167200
FR,SW			
C232SL,SR		Ceramic chip 39pF/50V	D010390167200
C233C,FL,FR		Ceramic chip 2200pF/50V	D011222777200
C234C,FL,FR		Ceramic chip 680pF/50V	D010681167200
C235,235SW		Ceramic chip 100pF/50V	D010101167200
C236		Electrolytic 1μF/50V	D040010087080
C237		Electrolytic 0.1μF/50V	D040R10087070
C238		Electrolytic 1μF/50V	D040010087080
C239		Ceramic chip 0.047μF/50V	D011473777200
C240		Electrolytic 1μF/50V	D040010087080
C241		Electrolytic 10μF/35V	D040100085100
C242		Ceramic chip 1000pF/50V	D010102167200
C243,244		Ceramic chip 0.047μF/50V	D011473777200
C245		Ceramic chip 100pF/50V	D010101167200
C246		Electrolytic 10μF/35V	D040100085100
C246SW		Electrolytic 4.7μF/50V	D0404R7087100
C247		Ceramic chip 100pF/50V	D010101167200
C248		Ceramic chip 1000pF/50V	D010102167200
C249	960 9003 108	Ceramic 0.022μF/25V	D005223594520
C250		Ceramic chip 100pF/50V	D010101167200
C251		Electrolytic 22μF/16V	D040220083070
C301~304		Ceramic chip 0.01μF/50V	D011103777200
C305~308		Ceramic chip 100pF/50V	D010101167200
C309		Ceramic chip 0.022μF/50V	D011223777200
C310		Ceramic chip 100pF/50V	D010101167200
C311		Ceramic chip 30pF/50V	D010300167200
C312		Ceramic chip 0.047μF/50V	D011473777200
C313		Mylar film 0.01μF/100V	D02010306C060
C314	963 0021 900	Mylar film 0.047μF/100V	D02047306C060
C315		Electrolytic 1μF/50V	D040010087080
C316		Electrolytic 10μF/50V	D040100087050
C317		Electrolytic 47μF/10V	D040470082050
C318	963 0021 900	Mylar film 0.047μF/100V	D02047306C060
C319		Electrolytic 10μF/35V	D040100085100
C320		Electrolytic 1μF/50V	D040010087080
C321	963 0021 900	Mylar film 0.047μF/100V	D02047306C060
C322		Electrolytic 33μF/50V	D040330087060
C323		Mylar film 0.1μF/100V	D02010406C060
C324		Electrolytic 47μF/25V	D040470084070
C325,326		Ceramic chip 100pF/50V	D010101167200
C328		Ceramic chip 0.047μF/50V	D011473777200

OTHER PARTS GROUP				Q'ty
CB201,202	963 0053 800	BEADS INDUCTOR	7610035800020	2
CN301A	960 0197 602	17P FFC connector base	L131520441745	1
CN302	960 0197 806	3P connector cord	L000101030040	1
CN301B	960 0197 709	17P FFC connector base	L131520451745	1
CP301	963 0049 102	3P connector cord	L102526803010	1
CP401	960 0116 803	12P connector base	L101353361210	1
CP402	963 0047 104	11P connector base	L101353361110	1
CP551	963 0061 106	19P connector base	L101353361910	1
CP552	963 0049 403	18P connector base	L101353361810	1
CP601	963 0048 705	6P connector base	L101353360610	1
CP701	963 0047 201	16P connector base	L101353361610	1
CP702	963 0047 104	11P connector base	L101353361110	1
CP801	963 0047 201	16P connector base	L101353361610	1
CP802	963 0049 403	18P connector base	L101353361810	1
CP803	963 0048 705	6P connector base	L101353360610	1
CP901	963 0060 806	11P connector base	L101220110000	1
J324~326		Carbon chip 0 ohm 1/8W	C200000061300	3
J355		Carbon chip 0 ohm 1/8W	C200000061300	1
L301	960 0010 307	Inductor 10μH	D330100700520	1
L302	960 0128 008	Inductor 100μH	D330101001020	1
SW301~322	963 0045 708	Tact switch	G180000270010	22
VEC301,302	960 0181 207	Rotary encoder	G121162420400 for E3,EU,E2,E1T	2
VEC301,302	212 0422 003	Rotary encoder	for E1,E1C,E1H	2
X201	960 0181 003	Resonator CST12.0MTW-TF01	E830120000050	1
X202	960 0091 805	Crystal 4.332MHz	E8004R3320051 for E2	1
—	960 0184 408	FLT holder	4320200026000	1
—	960 0180 509	FLT (16-ST-42GNK)	K530164200010	1
—	—	Earth wire	L046221014580	1

CNT P.W.B. UNIT

Ref. No.	Part No.	Part Name	Remarks
SEMICONDUCTORS GROUP			
IC401	963 0043 700	IC LC72131	J120721310030
IC402	963 0043 904	IC LA1266	J124126600010
IC403	963 0044 000	IC LA3401	J124340100010
IC551	960 0174 502	IC NJM2068DD	J121206800000
IC552	963 0043 506	IC TC9184AP	J080918400010
IC601	960 0175 200	IC BA7625	J171762500000
IC602	960 0195 400	IC PC74HC4094	J040744094020
IC651,652	960 0175 200	IC BA7625	J171762500000
IC653	963 0057 806	IC KIA78R05PI	J126780500370
Q401	960 0189 102	Transistor KTC3880S-O	J5223880O0210
Q402~404	269 0083 901	Transistor DTA114EK	J5200114E0210
Q405,406	960 0196 603	Transistor KTC2874B	J502287400010
Q407	963 0024 208	Transistor DTC114YK	J5220114Y0210
Q408	269 0083 901	Transistor DTA114EK	J5200114E0210
Q409	960 0189 102	Transistor KTC3880S-O	J5223880O0210
			for E2
Q551	960 0196 700	Transistor KTC3200BL	J5023200B0050
Q551SW, 552SW	960 0196 603	Transistor KTC2874B	J502287400010
Q552	960 0196 302	Transistor KTA1268BL	J5001268B0050
Q553~555	269 0046 906	Transistor DTA114ES	J6000114E0010
Q553T	960 0196 904	Transistor DTC114YS (NPN)	J6020114Y0050
Q601~603	960 0005 105	Transistor KTA1266Y	J5001266Y0050
Q651~656	960 0005 105	Transistor KTA1266Y	J5001266Y0050
D403	960 0197 000	Diode KDS160	K005016000010
D404	963 0020 309	Diode 1SS133T	K000013300520
D405,406	960 0197 000	Diode KDS160	K005016000010
D551,551T, 552	963 0020 309	Diode 1SS133T	K000013300520
D552T	963 0058 601	Zener diode MTZJ12B	K06012R044520
D553~561	963 0020 309	Diode 1SS133T	K000013300520
D562	960 0117 608	Diode 1N4004A	K040400400520
D564	960 0095 607	Zener diode MTZJ5.6B	K06005R644520
D565	963 0020 309	Diode 1SS133T	K000013300520
D601~606	960 0197 000	Diode KDS160	K005016000010
D651~656	960 0197 000	Diode KDS160	K005016000010
D652T	963 0061 601	Electrolytic 3300μF/10V	D040332082020
D657,658	960 0117 608	Diode 1N4004A	K040400400520
D901,902	960 0197 000	Diode KDS160	K005016000010
ZD401	960 0095 500	Zener diode MTZJ5.1B	K06005R144520

Ref. No.	Part No.	Part Name	Remarks
RESISTORS GROUP			
R401		Carbon chip 10 ohm 1/10W	C200010060200
R403		Carbon chip 470 ohm 1/10W	C200047160200
R404		Carbon chip 100 kohm 1/10W	C200010460200
R405	960 9003 807	Metal film 100 ohm 1/4W	C060010163050
R406		Carbon chip 4.7 kohm 1/10W	C200047260200
R407		Carbon chip 470 ohm 1/10W	C200047160200
R408		Carbon chip 1 Mohm 1/10W	C200012260200
			for E3,EU,E1,E1C,E1H,E1T
R408		Carbon chip 680 ohm 1/10W	C200068160200
			for E2
R409		Carbon chip 470 ohm 1/10W	C200047160200
R411		Carbon chip 68 kohm 1/10W	C200068360200
R412		Carbon chip 5.6 kohm 1/10W	C200056260200
R413		Metal film 220 ohm 1/4W	C060022163050
R414		Carbon chip 2.2 kohm 1/10W	C200022260200
R415		Carbon chip 1 kohm 1/10W	C200010260200
R416		Metal film 680 ohm 1/4W	C060068163050
R417		Carbon chip 1 kohm 1/10W	C200010260200
R418		Carbon chip 33 kohm 1/10W	C200033360200
R420		Carbon chip 3.3 kohm 1/10W	C200033260200
R423		Carbon chip 22 kohm 1/10W	C200022360200
R424		Carbon chip 4.7 kohm 1/10W	C200047260200
R426,427		Carbon chip 10 kohm 1/10W	C200010360200
R428		Carbon chip 3.3 kohm 1/10W	C200033260200
R429		Carbon chip 82 ohm 1/10W	C200082060200
R430	960 9003 807	Metal film 100 ohm 1/4W	C060010163050
R431		Carbon chip 5.1 kohm 1/10W	C200051260200
R432		Carbon chip 10 kohm 1/10W	C200010360200
R434	960 9003 807	Metal film 100 ohm 1/4W	C060010163050
R435		Carbon chip 3.3 kohm 1/10W	C200033260200
R437		Carbon chip 100 kohm 1/10W	C200010460200
R438,439		Carbon chip 100 kohm 1/10W	C200010460200
			for E3,EU,E1,E1C,E1H,E1T
R438,439		Carbon chip 180 kohm 1/10W	C200018460200
			for E2
R440,441		Carbon chip 120 kohm 1/10W	C200012460200
			for E3,EU,E1,E1C,E1H,E1T
R440,441		Carbon chip 220 kohm 1/10W	C200022460200
			for E2
R442,443		Carbon chip 3.3 kohm 1/10W	C200033260200
R444,445		Carbon chip 8.2 kohm 1/10W	C200082260200
			for E3,EU,E1,E1C,E1H,E1T
R448		Carbon chip 2.2 kohm 1/10W	C200022260200
R449		Carbon chip 3.9 kohm 1/10W	C200039260200
			for E2
R450		Carbon chip 1 kohm 1/10W	C200010260200
			for E2
R455		Carbon chip 330 ohm 1/10W	C200033160200
R456		Carbon chip 100 ohm 1/10W	C200010160200
R458,459		Carbon chip 4.7 kohm 1/10W	C200047260200
R460,461	963 9003 071	Carbon chip 2.7 Mohm 1/10W	C200027560200

Ref. No.	Part No.	Part Name	Remarks
R462~465		Carbon chip 470 ohm 1/10W	C200047160200
R467,468	963 9003 071	Carbon chip 2.7 Mohm 1/10W	C200027560200
R470		Carbon chip 1 kohm 1/10W	C200010260200
R471VT		Carbon chip 220 ohm 1/10W	C200022160200
R472		Carbon chip 100 ohm 1/10W	C200010160200
R473		Carbon chip 180 ohm 1/10W	C200018160200
			for E2
R473		Carbon chip 0 ohm 1/10W	C200000060200
			for E3,EU,E1,E1C,E1H,E1T
R475		Carbon chip 12 kohm 1/10W	C200012360200
R476		Carbon chip 56 kohm 1/10W	C200056360200
R478		Carbon chip 10 kohm 1/10W	C200010360200
R479		Carbon chip 100 kohm 1/10W	C200010460200
R551SW, 552SW		Carbon chip 470 ohm 1/10W	C200047160200
R553FL ,FR		Carbon chip 100 kohm 1/10W	C200010460200
R553SW		Carbon chip 22 kohm 1/10W	C200022360200
R553T		Carbon chip 1 kohm 1/10W	C200010260200
R554SW		Carbon chip 10 kohm 1/10W	C200010360200
R554T	244 2052 928	Metal film 47 ohm 1W	C060047065060
R558FL,FR		Carbon chip 4.7 kohm 1/10W	C200047260200
R559	960 9005 902	Metal film 1.2 kohm 1/4W	C060012263050
R559FL,FR		Carbon chip 22 kohm 1/10W	C200022360200
R560FL,FR		Carbon chip 510 kohm 1/10W	C200051460200
R561FL,FR		Carbon chip 33 kohm 1/10W	C200033360200
R563FL,FR		Carbon chip 390 ohm 1/10W	C200039160200
R564FL,FR		Carbon chip 470 ohm 1/10W	C200047160200
R565	960 9005 902	Metal film 1.2 kohm 1/4W	C060012263050
R567FL,FR		Carbon chip 470 kohm 1/10W	C200047460200
R569		Carbon chip 68 ohm 1/10W	C200068060200
R570	960 9005 902	Metal film 1.2 kohm 1/4W	C060012263050
R651~658		Carbon chip 75 ohm 1/10W	C200075060200
R651T,652T	963 9003 039	Metal film 1 ohm 1/4W	C060001063050
R660		Carbon chip 10 kohm 1/10W	C200010360200
R661	244 2051 961	Metal film 100 ohm 1W	C060010165060
R662		Carbon chip 68 ohm 1/10W	C200068060200
R663		Carbon chip 10 kohm 1/10W	C200010360200
R664	244 2051 961	Metal film 100 ohm 1W	C060010165060
R665		Carbon chip 68 ohm 1/10W	C200068060200
R666		Carbon chip 10 kohm 1/10W	C200010360200
R667	244 2051 961	Metal film 100 ohm 1W	C060010165060
R671		Carbon chip 68 ohm 1/10W	C200068060200
R672		Carbon chip 10 kohm 1/10W	C200010360200
R673	244 2051 961	Metal film 100 ohm 1W	C060010165060
R674		Carbon chip 68 ohm 1/10W	C200068060200
R675		Carbon chip 10 kohm 1/10W	C200010360200
R676	244 2051 961	Metal film 100 ohm 1W	C060010165060
R677		Carbon chip 68 ohm 1/10W	C200068060200
R678		Carbon chip 10 kohm 1/10W	C200010360200
R679	244 2051 961	Metal film 100 ohm 1W	C060010165060

Ref. No.	Part No.	Part Name	Remarks
R683		Carbon chip 75 ohm 1/10W	C200075060200
R901,902		Carbon chip 200 kohm 1/10W	C200020460200
R903,904		Carbon chip 100 ohm 1/10W	C200010160200
R903H,904H		Metal film 470ohm 2W	C060047166520
R905,906		Carbon chip 200 kohm 1/10W	C200020460200
R907,908		Carbon chip 100 ohm 1/10W	C200010160200
R909,910		Carbon chip 200 kohm 1/10W	C200020460200
R911,912		Carbon chip 100 ohm 1/10W	C200010160200
R913~916		Carbon chip 220 ohm 1/10W	C200022160200
R917~920		Carbon chip 100 kohm 1/10W	C200010460200
VR401	960 0096 305	Semi fixed resistor 10kohm	C541103115000
VR402	960 0096 402	Semi fixed resistor 100kohm	C541104115000
			for E2
VR402	963 0056 205	Semi fixed resistor 50kohm	C541503115000
			for E3,EU,E1,E1C,E1H,E1T
VR403	963 0052 005	Semi fixed resistor 200kohm	C541204115000
CAPACITORS GROUP			
C401,402		Ceramic chip 1000pF/50V	D011102777200
C403		Ceramic chip 0.022μF/50V	D011223777200
C404		Ceramic 2pF/50V	D000020007050
C405		Ceramic chip 0.022μF/50V	D011223777200
C406		Ceramic chip 18pF/50V	D010180167200
C408		Ceramic 6pF/50V	D000060007050
C409		Ceramic 100pF/50V	D005101177520
C410		Ceramic 470pF/50V	D005471277520
C411		Ceramic chip 1000pF/50V	D011102777200
C412		Ceramic chip 0.022μF/50V	D011223777200
C413		Ceramic chip 100pF/50V	D010101167200
C414		Electrolytic 2.2μF/50V	D0402R2087100
C415		Electrolytic 47μF/25V	D040470084070
C416		Electrolytic 10μF/35V	D040100085100
C417		Electrolytic 100μF/16V	D040101083100
C418		Ceramic chip 0.01μF/50V	D011103777200
C419		Electrolytic 10μF/35V	D040100085100
C420,421		Ceramic chip 22pF/50V	D010220167200
C422		Ceramic chip 470pF/50V	D010471167200
C423,424		Ceramic chip 0.022μF/50V	D011223777200
C425		Electrolytic 4.7μF/50V	D0404R7087100
C426		Electrolytic 3.3μF/50V	D0403R3087100
C427		Electrolytic 4.7μF/50V	D0404R7087100
C428		Ceramic chip 0.022μF/50V	D011223777200
C430	963 0021 900	Mylar film 0.047μF/100V	D02047306C060
C431		Ceramic chip 33pF/50V	D010330167200
C432		Electrolytic 47μF/25V	D040470084070
C433		Ceramic chip 0.022μF/50V	D011223777200
C434		Electrolytic 1μF/50V	D040010087080
			for E3,EU
C434		Electrolytic 0.33μF/50V	D040R33087100
			for E2,E1,E1C,E1H,E1T

Ref. No.	Part No.	Part Name	Remarks
C435,436		Ceramic chip 0.022μF/50V	D011223777200
C437		Electrolytic 47μF/25V	D040470084070
C438		Electrolytic 1μF/50V	D040010087080
C439		Electrolytic 0.22μF/50V	D040R22087100
C440,441		Electrolytic 1μF/50V	D040010087080
C442		Electrolytic 2.2μF/50V	D0402R2087100
C443		Electrolytic 10μF/35V	D040100085100
C444		Electrolytic 4.7μF/50V	D0404R7087100
C445		Electrolytic 10μF/35V	D040100085100
C446,447		Ceramic 270pF/50V	D004271067060
			for E3,EU,E2
C446,447		Ceramic 180pF/50V	D000181067060
			for E1,E1C,E1H,E1T
C448,449		Ceramic 470pF/50V	D004471067060
			for E3,EU
C448,449		Ceramic 330pF/50V	D000331167070
			for E1,E1C,E1H,E1T
C450,451		Electrolytic 10μF/35V	D040100085100
C452		Electrolytic 100μF/16V	D040101083100
C453		Ceramic chip 27pF/50V	D010270167200
			for E2,E1,E1C,E1H,E1T
C455		Ceramic chip 0.022μF/50V	D011223777200
			for E1,E1H,E1T
C456		Ceramic chip 680pF/50V	D010681167200
C457~460		Ceramic chip 100pF/50V	D010101167200
C461		Ceramic chip 22pF/50V	D010220167200
C462		Ceramic chip 470pF/50V	D010471167200
			for E2
C463		Mylar film 0.056μF/100V	D02056306C060
C464		Ceramic 3pF/50V	D000030007050
C471VT		Electrolytic 1μF/50V	D040010087080
C472VT		Ceramic chip 0.047μF/50V	D011473777200
C551		Electrolytic 2.2μF/50V	D0402R2087250
C551M		Electrolytic 100μF/35V	D040101085100
C551S		Ceramic 0.047μF/50V	D005473597520
C551T,552T		Electrolytic 100μF/16V	D040101083100
C552		Electrolytic 0.1μF/50V	D040R10087070
C552FL,FR		Electrolytic 10μF/35V	D040100085100
C553		Electrolytic 0.1μF/50V	D040R10087070
C553FL,FR		Ceramic chip 100pF/50V	D010101167200
C553T,554T		Ceramic chip 0.1μF/50V	D011104777200
C554		Electrolytic 0.1μF/50V	D040R10087070
C554FL,FR		Electrolytic 10μF/35V	D040100085100
C555		Ceramic 0.01μF/16V	D005103773530
C555FL,FR		Ceramic chip 47pF/50V	D010470167200
C556		Ceramic 0.01μF/16V	D005103773530
C556FL,FR		Electrolytic 10μF/35V	D040100085100
C557		Electrolytic 10μF/35V	D040100085100
C557FL,FR		Mylar film 0.01μF/100V	D02010306C060
C558FL,FR		Mylar film 0.056μF/100V	D02056306C060
C559FL,FR		Mylar film 0.022μF/100V	D02022306C060

Ref. No.	Part No.	Part Name	Remarks
C560FL,FR		Mylar film 0.0033μF/100V	D02033206C060
C561FL, 562FR		Mylar film 0.0068μF/100V	D02068206C060
C601~604		Electrolytic 4.7μF/50V	D0404R7087100
C605		Electrolytic 470μF/6.3V	D040471081060
C606,607		Electrolytic 10μF/16V	D040100083100
C608,609		Electrolytic 470μF/6.3V	D040471081060
C610		Electrolytic 10μF/16V	D040100083100
C611		Electrolytic 100μF/10V	D040101082060
C612		Electrolytic 100μF/16V	D040101083100
C613		Electrolytic 1μF/50V	D040010087080
C614		Ceramic chip 0.047μF/50V	D011473777200
C651~658		Electrolytic 4.7μF/50V	D0404R7087100
C651T	963 0021 900	Mylar film 0.047μF/100V	D02047306C060
C653T		Electrolytic 1μF/50V	D040010087080
C659		Electrolytic 470μF/6.3V	D040471081060
C660		Electrolytic 10μF/16V	D040100083100
C661		Electrolytic 470μF/6.3V	D040471081060
C662		Electrolytic 10μF/16V	D040100083100
C663		Electrolytic 470μF/6.3V	D040471081060
C664		Electrolytic 10μF/16V	D040100083100
C665		Electrolytic 100μF/10V	D040101082060
C666		Electrolytic 470μF/6.3V	D040471081060
C667		Electrolytic 10μF/16V	D040100083100
C668		Electrolytic 470μF/6.3V	D040471081060
C669		Electrolytic 10μF/16V	D040100083100
C670		Electrolytic 470μF/6.3V	D040471081060
C671		Electrolytic 10μF/16V	D040100083100
C672		Electrolytic 100μF/10V	D040101082060
C673,674		Electrolytic 1μF/50V	D040010087080
C675		Electrolytic 100μF/16V	D040101083100
C676,677		Ceramic chip 0.047μF/50V	D011473777200
C681~683		Ceramic 100pF/50V	D005101177520
C901~906		Ceramic chip 220pF/50V	D010221167200
C901H,902H		Ceramic 0.001μF/50V	D005102177530
C903H		Electrolytic 1μF/50V	D040010087080
C904H	960 9003 108	Ceramic 0.022μF/25V	D005223594520
C907~910		Ceramic chip 100pF/50V	D010101167200
C911		Ceramic 0.01μF/50V	D004103097060

OTHER PARTS GROUP				Q'ty
CF401,402	960 0187 104	Ceramic filter SFE10.7MA8	E430107000140 for E3,EU	2
CF401,402	960 0177 509	Ceramic filter SFE10.7MS3GH	E430107000150 for E2,E1,E1C, E1H,E1T	2
CF403	960 0187 609	Ceramic resonator	E830450000070	1
CN105	963 0059 105	2P connector base	L000121020040 for E2	1

Ref. No.	Part No.	Part Name	Remarks	Q'ty
CN392	960 0198 009	2P connector cord	L000800020040 for E3,EU	1
CN401	960 0117 103	12P connector base	L101352371210	1
CN401E	963 0059 008	7P connector socket	L000101080050	1
CN402	963 0046 600	11P connector base	L101352371110	1
CN551	963 0061 009	19P connector base	L101352371910	1
CN552	963 0050 609	18P connector base	L101352371810	1
CN553	963 0049 801	20P connector base	L101352372010	1
CN554	963 0059 804	15P connector cord	L000800150010	1
CN601	963 0050 308	6P connector socket	L101352370610	1
CN602	963 0059 503	7P connector cord	L000181070020 for E3,EU	1
CN602	963 0059 406	7P connector cord	L000161070010 for E2,E1,E1C, E1H,E1T	1
CN901	960 0197 301	3P connector cord	L352103263300	1
CN902	963 0059 600	11P connector cord	L000281110010	1
CP302	963 0049 908	3P connector base	L101220030010	1
CP392	963 0048 909	3P connector base	L101220030000 for E3,EU	1
CP392	963 0059 707	2P connector base	L000351020040 for E2,E1,E1C, E1H,E1T	1
CP602	963 0060 602	7P connector base	L101220070010	1
CP603	960 0123 207	3P connector base	L102526700300	1
FE401	960 0187 706	Front end	E900401010020	1
G901	—	1P wire	8410800010010	1
H/SINK	—	Heat sink	2120210238000 for E2,E1,E1C, E1H,E1T	1
J402		Carbon chip 0 ohm 1/8W	C200000061300 for EU,E2,E1, E1C,E1H,E1T	1
J403,404		Carbon chip 0 ohm 1/8W	C200000061300 for E3	2
J405~408		Carbon chip 0 ohm 1/8W	C200000061300 for EU,E2,E1, E1C,E1H,E1T	4
J551~556		Carbon chip 0 ohm 1/8W	C200000061300 for E3,EU	6
J583,584		Carbon chip 0 ohm 1/8W	C200000061300	2
J585,586		Carbon chip 0 ohm 1/10W	C200000060200	2
J587		Carbon chip 0 ohm 1/8W	C200000061300 for E1,E1C,E1H,E1T	1
J651~653		Carbon chip 0 ohm 1/8W	C200000061300 for E2,E1,E1C, E1H,E1T	3

Ref. No.	Part No.	Part Name	Remarks	Q'ty
J654		Carbon chip 0 ohm 1/10W	C200000060200 for E2,E1,E1C, E1H,E1T	1
J655		Carbon chip 0 ohm 1/8W	C200000061300 for E2,E1,E1C, E1H,E1T	1
L401	963 0052 102	Inductor 1μH	D3301R0001020	1
L402	960 0010 307	Inductor 10μH	D330100700520	1
L403	963 0056 409	MW IF COIL RBW07VB-K5025 BLK	D950500500010	1
RELAY551	963 0052 607	Relay (G5V-2 DC12V)	G680120202010	1
SW391~398	963 0045 708	Tact switch	G180000270010	8
SW401	963 0056 700	SLIDE SW	G060110100010 for E1,E1H,E1T	1
SW901	963 0056 603	Push switch	G000040890000 for E2,E1,E1C, E1H,E1T	1
T401	960 0186 600	MW IF COIL PCFMAF-270	D950500200000	1
T402	960 0007 349	FM DET TRANS	D951561100000	1
T403	960 0007 352	FM DET TRANS	D951561200000	1
T404,405	960 0071 207	MPX filter	E401500100000 for E2	2
T406	960 0037 607	antibirdie filter	E403126832410 for E2	1
X401	960 0187 405	Crystal 7.2 MHz	E8007R2000071	1
X402	963 0043 302	Resonator CSB456F11	E830456000050	1
—	960 0184 000	Screw bracket	4010210196000	2
—	963 0054 003	Shield tuner pack	3070210056000	1
—	960 0184 602	Plaate	4470210146000	1
—	—	1P wire	8410800010030	1
—	963 0052 403	3P antenna terminal	G593021068010	1
—	960 0188 200	4P pin jack	G602040610000	1
—	963 0061 708	Plaate	4470210196000	1
—	963 0057 000	1P pin jack	G600010003030	1
—	960 0188 404	3P pin jack	G606030164020	2
—	963 0018 007	Screw (2S 3×8 ZNY/BH)	B020030081B10 for E2,E1,E1C, E1H,E1T	1
—	960 0181 304	3P S terminal	G402042190000	1
—	960 0181 401	4P S terminal	G403040010010	2
—	960 0188 307	6P pin jack	G603060610010	1
—	960 0143 203	AC outlet	G435040110000 for E2,E1,E1H,E1T	1
—	960 0176 209	Push switch	G000122000010 for E3,EU	1
—	960 0187 502	Head phone jack(D6.5)	G402038400031	1
—	960 0188 200	4P pin jack	G602040610000	1

PRE-AMP P.W.B. UNIT

Ref. No.	Part No.	Part Name	Remarks
SEMICONDUCTORS GROUP			
Q501C,FL, FR,M,SL, Q501SR, Q502M,503M	960 0196 603	Transistor KTC2874B	J502287400010
Q502C,FL, FR,SL,SR	960 0196 205	Transistor KSA992F	J5000992F0050
Q503C,FL, FR,SL,SR			
Q504C,FL, FR,SL,SR	960 0196 506	Transistor KSC1845F	J5021845F0000
RESISTORS GROUP			
Q509C,FL, FR,SL,SR	960 9005 902	Metal film 1.2 kohm 1/4W	C060012263050
Q511C,FL, FR,SL,SR	960 9004 301	Metal film 47 ohm 1/4W	C060047063050
CAPACITORS GROUP			
C501C,FL, FR,SL,SR		Electrolytic 22µF/16V	D040220083070
C501M,502C, FL,FR,SL,SR		Electrolytic 10µF/35V	D040100085100
C503C,FL, FR,SL,SR	963 9003 165	Ceramic 220pF/500V	D009092212500
C504C,FL, FR,SL,SR	963 9003 178	Ceramic 220pF/50V	D005221277520
C505C,FL, FR,SL,SR	963 9003 181	Ceramic 33pF/500V	D00033006D050
C506C,FL, FR,SL,SR		Electrolytic 100µF/10V	D040101082060
C507C,FL, FR,SL,SR	963 9003 194	Mylar film 0.0022µF/100V	D02022206C060
C514FL,FR		Electrolytic 10µF/35V	D040100085100
OTHER PARTS GROUP			**Q'ty**
CN501	963 0046 406	9P connector base	L101352370910 1
CN502~504	963 0050 201	5P connector base	L101352370510 3
CN505	963 0050 308	6P connector base	L101352370610 1
CP506	963 0060 709	8P connector base	L101220080000 1
CP554	963 0060 903	15P connector base	L101220150000 1
—	960 0184 000	Screw bracket	4010210196000 2

DSP P.W.B. UNIT

Ref. No.	Part No.	Part Name	Remarks
SEMICONDUCTORS GROUP			
IC803	963 0023 500	IC MC74HCU04AD	J040740400200
IC805,806	963 0043 807	IC BA4510F	J121451000010
IC807	960 0195 002	IC W27C020	J000270200010
IC807S	963 0025 508	32P IC socket	G450320000010
IC808,809	960 0179 206	IC DC74HCT574	J040745740040
IC810	960 0195 507	IC LC89055W	J046890550010
IC811	960 0195 905	IC BA033FP	J12603R300020
IC812	960 0195 701	IC CS492604	J080492604010
IC813	960 0195 604	IC AK4527VQ 94C	J080452700010
IC814~816	960 0174 502	IC NJM2068DD	J121206800020
IC821	960 0195 206	IC TC74HC125D	J040741250130
IC822	960 0195 109	IC SN74LV00APW	J040740000170
IC828	963 0043 409	IC DC74HCT244	J040742440080
IC829	960 0196 001	IC NJM7805FA (S)	J126780500130
IC830	963 0043 409	IC DC74HCT244	J040742440080
IC831	960 0195 303	IC SN74LV4040	J040744040020
Q804C,FL, FR,SL,SR,SW	960 0196 603	Transistor KTC2874B	J502287400010
Q805	269 0083 901	Transistor DTA114EK	J5200114E0210
Q806	269 0082 902	Transistor DTC114EK	J5220114E0210
Q807	269 0083 901	Transistor DTA114EK	J5200114E0210
D801, 805~807	960 0197 000	Diode KDS160	K005016000010
RESISTORS GROUP			
J824,828		Carbon chip 0 ohm 1/10W	C200000060200
R801		Carbon chip 4.7 kohm 1/10W	C200047260200
R817~825		Carbon chip 10 kohm 1/10W	C200010360200
R829		Carbon chip 0 ohm 1/10W	C200000060200
R830,831		Carbon chip 10 kohm 1/10W	C200010360200
R834,835		Carbon chip 4.7 kohm 1/10W	C200047260200
R836		Carbon chip 10 kohm 1/10W	C200010360200
R837		Carbon chip 47 ohm 1/10W	C200047060200
R838		Carbon chip 10 kohm 1/10W	C200010360200
R839,842		Carbon chip 4.7 kohm 1/10W	C200047260200
R848		Carbon chip 100 ohm 1/10W	C200010160200
R850		Carbon chip 75 ohm 1/10W	C200075060200
R854		Carbon chip 2.2 kohm 1/10W	C200022260200
R854L,R		Carbon chip 47 kohm 1/10W	C200047360200
R855		Carbon chip 100 kohm 1/10W	C200010460200
R856		Carbon chip 10 kohm 1/10W	C200010360200
R858,859		Carbon chip 0 ohm 1/10W	C200000060200
R859R, R860L,R		Carbon chip 4.7 kohm 1/10W	C200047260200
R861		Carbon chip 47 ohm 1/10W	C200047060200
R861L,R		Carbon chip 470 ohm 1/10W	C200047160200
R862,863		Carbon chip 0 ohm 1/10W	C200000060200
R862L,R		Carbon chip 4.7 kohm 1/10W	C200047260200

Ref. No.	Part No.	Part Name	Remarks
R863L,R		Carbon chip 470 ohm 1/10W	C200047160200
R864C,FL,		Carbon chip 100 kohm 1/10W	C200010460200
FR,SL,SR,SW			
R866		Carbon chip 10 kohm 1/10W	C200010360200
R866C,FL,		Carbon chip 4.7 kohm 1/10W	C200047260200
FR,SL,SR,SW			
R867		Carbon chip 100 kohm 1/10W	C200010460200
R867C,FL,		Carbon chip 4.7 kohm 1/10W	C200047260200
FR,SL,SR,SW			
R868C,FL,			
FR,SL,SR,SW			
R869C,FL,			
FR,SL,SR,SW			
R870C,FL,		Carbon chip 1 kohm 1/10W	C200010260200
FR,SL,SR,SW			
R871C,FL,		Carbon chip 100 kohm 1/10W	C200010460200
FR,SL,SR,SW			
R872C,FL,		Carbon chip 2.2 kohm 1/10W	C200022260200
FR,SL,SR,SW			
R880,881		Carbon chip 47 ohm 1/10W	C200047060200
R895		Carbon chip 100 kohm 1/10W	C200010460200
R911		Carbon chip 10 kohm 1/10W	C200010360200
R913		Carbon chip 1 Mohm 1/10W	C200010560200
R922		Carbon chip 4.7 kohm 1/10W	C200047260200
R923		Carbon chip 6.2 kohm 1/10W	C200062260200
R927		Carbon chip 75 ohm 1/10W	C200075060200
R928		Carbon chip 5.1 kohm 1/10W	C200051260200
R929		Carbon chip 8.2 kohm 1/10W	C200082260200
R930		Carbon chip 3 kohm 1/10W	C200030260200
R931		Carbon chip 6.2 kohm 1/10W	C200062260200
R931L,R		Carbon chip 18 kohm 1/10W	C200018360200
R932		Carbon chip 4.7 kohm 1/10W	C200047260200
R938		Carbon chip 470 kohm 1/10W	C200047460200
R940		Carbon chip 10 kohm 1/10W	C200010360200
R941		Carbon chip 470 ohm 1/10W	C200047160200
R942,943		Carbon chip 0 ohm 1/10W	C200000060200
R945,946		Carbon chip 0 ohm 1/10W	C200000060200
R947,948		Carbon chip 0 ohm 1/10W	C200000060200
R949		Carbon chip 47 ohm 1/10W	C200047060200
R950,951		Carbon chip 0 ohm 1/10W	C200000060200
R952~954		Carbon chip 100 ohm 1/10W	C200010160200
CAPACITORS GROUP			
C801		Ceramic chip 0.1μF/50V	D011104597200
C802,803		Ceramic chip 22pF/50V	D010220167200
C805		Ceramic chip 22pF/50V	D010220167200
C808		Ceramic chip 0.1μF/50V	D011104597200
C809		Electrolytic 100μF/10V	D040101082060
C810		Ceramic chip 0.1μF/50V	D011104597200
C811		Electrolytic 47μF/10V	D040470082050
C816		Ceramic chip 22pF/50V	D010220167200

Ref. No.	Part No.	Part Name	Remarks
C817		Electrolytic 0.1μF/50V	D040R10087070
C818		Ceramic chip 0.1μF/50V	D011104597200
C820		Electrolytic 47μF/10V	D040470082050
C821		Electrolytic 1000μF/6.3V	D040102081060
C822,823		Ceramic chip 0.1μF/50V	D011104597200
C824		Electrolytic 100μF/10V	D040101082060
C825		Electrolytic 1μF/50V	D040010087050
C826		Electrolytic 10μF/35V	D040100085050
C827		Ceramic chip 0.1μF/50V	D011104597200
C828		Ceramic chip 0.01μF/50V	D011103777200
C829		Electrolytic 10μF/35V	D040100085050
C830,832		Ceramic chip 0.1μF/50V	D011104597200
C836		Electrolytic 220μF/6.3V	D040221081050
C837,838		Ceramic chip 0.1μF/50V	D011104597200
C839		Ceramic chip 0.22μF/50V	D011224597200
C840		Electrolytic 2.2μF/50V	D0402R2087250
C841		Electrolytic 47μF/10V	D040470082050
C842		Ceramic chip 0.1μF/50V	D011104597200
C843		Electrolytic 100μF/10V	D040101082060
C844		Ceramic chip 0.1μF/50V	D011104597200
C854,855		Electrolytic 100μF/25V	D040101084060
C856~863		Ceramic chip 0.1μF/50V	D011104597200
C864L,R		Electrolytic 10μF/35V	D040100085050
C865L,R		Ceramic chip 100pF/50V	D010101167200
C869L,R		Ceramic chip 100pF/50V	D010101167200
C871L,R		Ceramic chip 1000pF/50V	D011102777200
C873C,FL,		Ceramic chip 680pF/50V	D010681167200
FR,SL,SR,SW			
C874C,FL,			
FR,SL,SR,SW			
C875C,FL,		Electrolytic 10μF/35V	D040100085050
FR,SL,SR,SW			
C876C,FL,		Ceramic chip 3300pF/50V	D011332777200
FR,SL,SR,SW			
C878		Electrolytic 100μF/10V	D040101082060
C880C,FL,		Electrolytic 10μF/35V	D040100085050
FR,SL,SR,SW			
C894,896		Ceramic chip 0.1μF/50V	D011104597200
C908,909		Ceramic chip 27pF/50V	D010270167200
C916		Ceramic chip 0.1μF/50V	D011104597200
C917		Electrolytic 10μF/35V	D040100085050
C918		Ceramic chip 0.1μF/50V	D011104597200
C919		Ceramic chip 0.01μF/50V	D011103777200
C920		Ceramic chip 0.1μF/50V	D011104597200
C921		Ceramic chip 0.01μF/50V	D011103777200
C923,925		Ceramic chip 0.1μF/50V	D011104597200
C926		Electrolytic 10μF/35V	D040100085050
C931,935		Ceramic chip 0.01μF/50V	D011103777200
C936		Ceramic chip 0.1μF/50V	D011104597200
C937		Electrolytic 10μF/35V	D040100085050
C938		Electrolytic 1μF/50V	D040010087050

VOLTAGE SEL P.W.B. UNIT

Ref. No.	Part No.	Part Name	Remarks
C939,940		Ceramic chip 0.01µF/50V	D011103777200
C943		Electrolytic 0.1µF/50V	D040R10087070
C944		Ceramic chip 0.01µF/50V	D011103777200
C945		Ceramic chip 1000pF/50V	D011102777200
C946,947		Ceramic chip 0.1µF/50V	D011104597200
C948		Electrolytic 10µF/35V	D040100085050
C949		Electrolytic 2.2µF/50V	D0402R2087250
C950		Ceramic chip 0.1µF/50V	D011104597200
C951		Electrolytic 100µF/10V	D040101082060
C952,953		Ceramic chip 0.1µF/50V	D011104597200
C954,955		Ceramic chip 0.01µF/50V	D011103777200
C956		Ceramic chip 1000pF/50V	D011102777200
OTHER PARTS GROUP			Q'ty
CB801, 803~805, 807~820, 828,840	963 0050 502	Chip emifil	7611010000020 20
CN801	963 0046 707	16P connector socket	L101352371610 1
CN802	963 0050 609	18P connector socket	L101352371810 1
CN803	963 0050 308	6P connector socket	L101352370610 1
FB801C,FL, FR,SL,SR,SW, FB802L,R	963 0050 706	Beads inductor	7610035500010 8
L801,802	963 0050 803	Inductor 4.7µH	D3304R7000150 2
L803	963 0050 900	Inductor 2.2µH	D3302R2000150 1
L805	963 0050 803	Inductor 4.7µH	D3304R7000150 1
L807	963 0050 900	Inductor 2.2µH	D3302R2000150 1
XTAL801	960 0180 907	Crystal 12.288MHz	E80012R288020 1
—	960 0180 800	Optical connector (GP1F37R1)	E100137000010 2
—	963 0052 500	1P pin jack	G600010003100 1

Ref. No.	Part No.	Part Name	Remarks	Q'ty
OTHER PARTS GROUP				
CN105	963 0059 202	2P connector cord	L000151020040 for E1,E1H,E1T	1
CN903	963 0058 805	2P connector cord	L000101020070 for E1,E1H,E1T	1
CP901	963 0061 203	5P connector base	L104353280500 for E1,E1H,E1T	1
CP902	963 0059 309	3P connector base	L000151030030 for E1,E1H,E1T	1
F101	960 0142 602	Fuse 2.5A	G650252251160 for E1,E1H,E1T	1
⚠ F101A,B	960 0005 804	Fuse clip	G645000050010 for E1,E1H,E1T	2
⚠ F102	963 0044 709	Fuse 3.15A	G650312251160 for E1,E1H,E1T	1
⚠ F102A,B	960 0005 804	Fuse clip	G645000050010 for E1,E1H,E1T	2
⚠ F901	963 0057 107	Fuse 6.3A	G650632251160 for E1,E1H,E1T	1
⚠ F901A,B	960 0005 804	Fuse clip	G645000050010 for E1,E1H,E1T	2
JK911	960 0143 203	AC outlet	G435040110000 for E1,E1H,E1T	1
JK912	963 0056 904	SLIDE SW	G060268320010 for E1,E1H,E1T	1
—	963 0044 602	Supporter	4070210192000 for E1,E1H,E1T	2
—	963 0051 103	Spacer	4300210062000 for E1,E1H,E1T	2

EXPLODED VIEW

WARNING:
Parts marked with this symbol ⚠ ▨ have critical characteristics.
Use ONLY replacement parts recommended by the manufacturer.

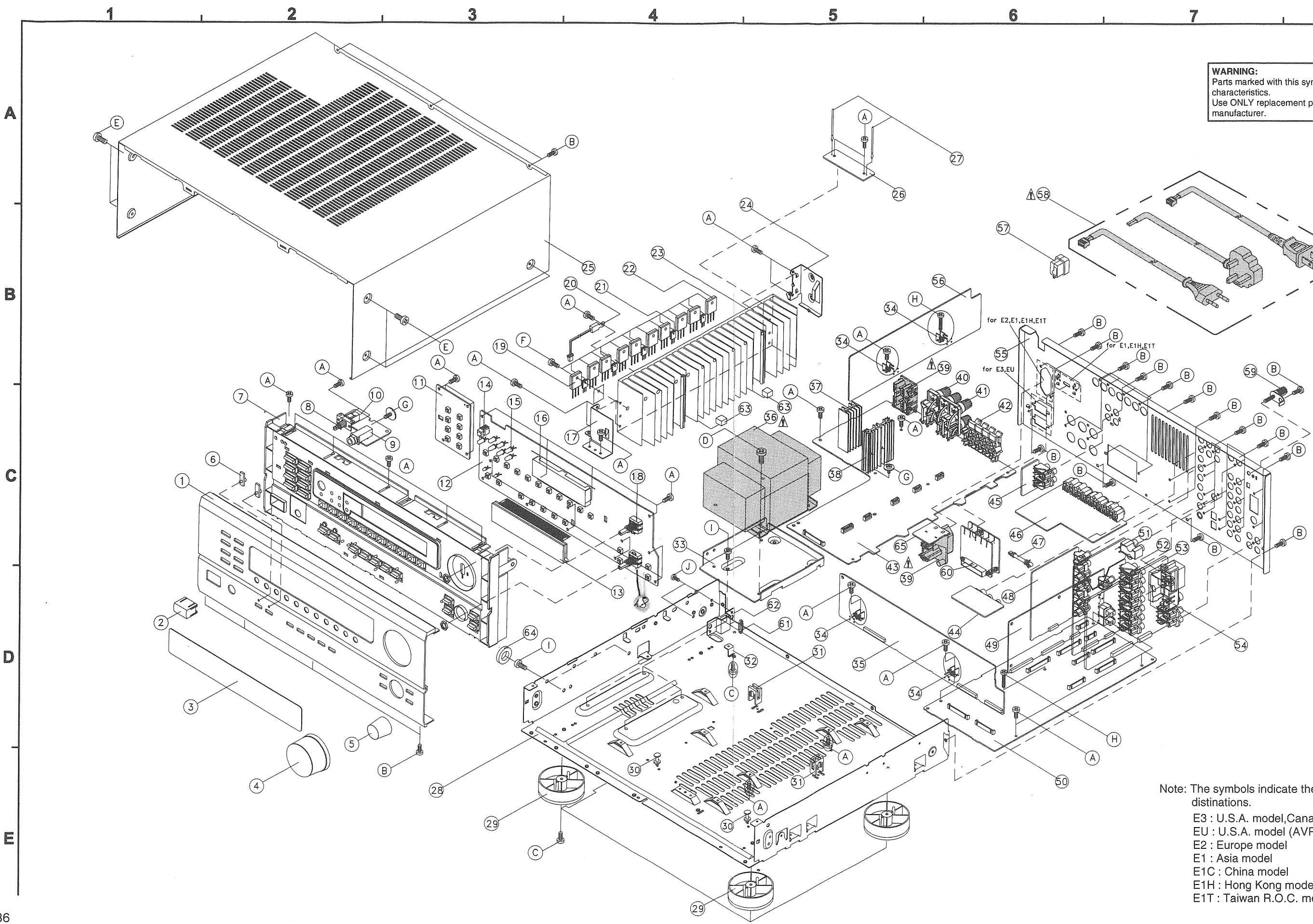

Note: The symbols indicate the following distinations.

E3 : U.S.A. model,Canada model
EU : U.S.A. model (AVR-881)
E2 : Europe model
E1 : Asia model
E1C : China model
E1H : Hong Kong model
E1T : Taiwan R.O.C. model

PARTS LIST OF EXPLODED VIEW

Note: The symbols in the column "Remarks" indicate the following destinations.
E3: U.S.A. model, Csnada model
EU: U.S.A. model (AVR-881)
E2: Europe model
E1: Asia model
E1C: China model
E1H: Hong Kong model
E1T: Taiwan R.O.C. model

Ref. No.	Part No.	Part Name	Remarks	Q'ty
	963 0042 507	Main P.W.B assy	7025HK9907010	1
			for E3,EU	
	963 0042 536		7025HK9907040	1
			for E2	
	963 0042 578		7025HK9907110	1
			for E1,E1H,E1T	
	963 0042 549		7025HK9907060	1
			for E1C	
26		Video CNT P.W.B assy		1
43		Main P.W.B assy		1
51		Input P.W.B assy		1
	963 0042 604	Processor P.W.B assy	7025HK9907011	1
			for E3,EU	
	963 0042 633		7025HK9907041	1
			for E2	
	963 0042 662		7025HK9907111	1
			for E1,E1C,E1H,E1T	
12		Front P.W.B assy		1
50		CPU P.W.B assy		1
	963 0042 701	CNT P.W.B assy	7025HK9907012	1
			for E3,EU	
	963 0042 730		7025HK9907042	1
			for E2	
	963 0042 769		7025HK9907112	1
			for E1,E1C,E1H,E1T	
	963 0042 743		7025HK9907062	1
			for E1C	
10		Head phone P.W.B assy		1
11		Switch P.W.B assy		1
35		Cnt P.W.B assy		1
44		EXT-IN P.W.B assy		1
45		Preout P.W.B assy		1
46		S-Video P.W.B assy		1
48		Video P.W.B assy		1
53		Tuner P.W.B assy		1
65		Outlet P.W.B assy	for E2	1
	963 0042 808	Pre-Amp P.W.B assy	7025HK9907013	1
56		Pre-Amp P.W.B assy		1
	963 0042 905	DSP P.W.B assy	7025HK9907014	1
49		DSP P.W.B assy		1
	963 0060 110	Voltage sel P.W.B assy	7025HK9907105	1
			for E1,E1H,E1T	
60		Voltage sel P.W.B assy	for E1,E1H,E1T	1
1	963 0055 303	Front panel	3067210238000	1
			for E3	
1	963 0055 329	Front panel	3067210238060	1
			for EU	
1	963 0055 316	Front panel	3067210238020	1
			for E2(Black model)	
1	963 0055 413	Front panel	3067210238010	1
			for E2(Gold model)	
1	963 0055 426	Front panel	3067210238040	1
			for E1,E1C,E1H,E1T	

Ref. No.	Part No.	Part Name	Remarks	Q'ty
2	960 0185 009	Power button	5090210201000	1
			for Black model	
2	963 0055 206	Power button(GO)	5097210201110	1
			for Gold mode	
3	963 0054 702	Window	5077210242010	1
4	963 0054 906	Main volume knob	5087210191010	1
			for Black model	
4	963 0055 002	Main volume knob(GO)MOLD	5087210191110	1
			for E2(Gold model),E1T	
4	112 0839 008	Main volume knob(GO):AL	for E1,E1C,E1H	
5	963 0054 809	Select knob(BK)	5080210201000	1
			for Black model	
5	963 0055 109	Select knob(GO)MOLD	5087210201100	1
			for E2(Gold model),E1T	
5	112 0835 015	Select knob(GO):AL	for E1,E1C,E1H	
6	963 0051 307	Lens	3710210023000	2
7	963 0055 604	Inner panel(BK)	3217210061000	1
			for Black model	
7	963 0055 617	Inner panel(GO)	3217210062000	1
			for Gold mode	
8	960 0176 209	Push switch	G000122000010	1
			SW901 for E3,EU	
8	963 0056 603	Push switch	G000040890000	1
			SW901 for E2,E1,	
			E1C,E1H,E1T	
9	960 0187 502	Head phone jack(D6.5)	G402038400031	1
13	960 0180 509	FLT (16-ST-42GNK)	K530164200010	1
14	960 0181 100	IC NJL64H380A	E940643800000	
			RMC301	
15	960 0197 204	LED PI5-RD/HL50RDRF4T	K500052015010	
			LED301~307	
16	960 0184 408	FLT holder	4320200026000	1
17		Heat sink bracket F	4010210396000	1
18	960 0181 207	Rotary encoder	G121162420400	2
			VEC301,302 for	
			E3,EU,E2,E1T	
18	212 0422 003	Rotary encoder	VEC301,302 for	2
			E1,E1C,E1H	
19	963 0044 107	Transistor 2SB1560Y	J5011560Y0000	5
			Q102C,FL,FR,SL,SR	
20	960 0187 900	Posistor	F320161001020	1
21	963 0058 106	Transistor 2SD947F	J503947F00000	5
			Q103C,FL,FR,SL,SR	
22	963 0044 204	Transistor 2SD2390Y	J5032390Y0000	5
			Q101C,FL,FR,SL,SR	
23	—	Heat sink	2120210128000	1
24	960 0184 204	Heat sink bracket B	4010210386000	1
25	960 0183 218	Top cover	3000210026000	1
			for E3,EU	
25	960 0183 205	Top cover	3000210026001	1
			for E2(Black model)	
25	963 0055 507	Top cover	3000210026101	1
			for Gold model	
27	—	Wire clamp	4330000120000	2

Ref. No.	Part No.	Part Name	Remarks	Q'ty
28	963 0055 808	Chassis	3200210146100	1
			for E3,EU	
28	960 0198 216	Chassis	3200210146301	1
			for E2,E1,	
			E1C,E1H,E1T	
29	960 0183 904	Foot assy	4008020061010	4
30	963 0051 103	Card spacer	4300210062000	2
31	960 0136 605	PCB supporter	4070001601010	2
32	960 0184 107	Supporter bracket	4010210206000	1
33	960 0192 306	Trans bracket	4010210466000	1
34	960 0184 000	Screw bracket	4010210196000	2
⚠ 36	963 0056 140	Power trans	8200960570010	1
			for E3,EU	
⚠ 36	963 0056 111	Power trans	8200960570031	1
			for E2	
⚠ 36	963 0056 137	Power trans	8200960570052	1
			for E1,E1H,E1T	
⚠ 36	963 0056 124	Power trans	8200960570041	1
			for E1C	
37	—	Heat sink	2120044308010	1
38	—	Heat sink	2120043538050	1
⚠ 39	960 0187 803	AC outlet(2P)	G435204004010	1
			JK104 for E3,EU	
⚠ 39	960 0143 203	AC outlet	G435040110000	1
			for E2,E1,E1H,E1T	
40	960 0194 809	2P speaker terminal	G611021078110	1
			JK103	
41	960 0188 608	4P speaker terminal	G612041037310	1
			JK102	
42	960 0194 304	8P speaker terminal	G598041680020	1
			JK101	
47		PCB holder	4420010173010	1
52	960 0184 602	Plate	4470210146000	1
54	963 0054 003	Shield tuner pack	3070210056000	1
55	963 0055 701	Back panel	3207210256000	1
			for E3	
55	963 0055 756	Back panel	3207210256050	1
			for EU	
55	963 0055 714	Back panel	3207210256020	1
			for E2	
55	963 0055 730	Back panel	3207210256040	1
			for E1,E1H,E1T	
55	963 0055 727	Back panel	3207210256030	1
			for E1C	
57	960 0192 403	Cord bush	4380210002000	1
⚠ 58	960 0190 104	AC cord assy	L068020030010	1
			for E3,EU	
⚠ 58	960 0165 304	AC cord assy	L068040011010	1
			for E2	
⚠ 58	963 0060 408	AC cord assy	L068040090000	1
			for E1,E1T	
⚠ 58	960 0143 009	AC cord assy	L068000000040	1
			for E1H	

Ref. No.	Part No.	Part Name	Remarks	Q'ty
⚠ 58	963 0060 301	AC cord assy	L068000970020	1
			for E1C	
59	960 0183 807	Terminal	3790000090000	1
61	963 0044 602	PC suppoter	4070210192000	
			for E2,E1,	
			E1C,E1H,E1T	
62	963 0044 505	Side bracket	4010210236000	1
			for E2,E1,	
			E1C,E1H,E1T	
63	963 0054 304	Heatsink cushion	4050210205000	2
			for E2,E1,	
			E1C,E1H,E1T	
64	963 0051 200	Cushion	4050210165000	2
			for EU,E2,	
			E1,E1C,E1H,E1T	
★	960 0093 104	Push livet	2410040353010	6
			for E2,E1,	
			E1C,E1H,E1T	
★	963 0061 407	FFC cable	L301186171850	1

SCREWS

Ref. No.	Part No.	Part Name	Remarks	Q'ty
A	963 0018 007	Screw (2S 3×8 ZNY/BH)	B020030081B10	44
B	960 0108 701	Screw (2S 3×10 DOT BK)	B020030103B11	43
			for E3,EU,E2	
B	960 0108 701	Screw (2S 3×10 DOT BK)	B020030103B11	45
			for E1,E1H,E1T	
B	960 0108 701	Screw (2S 3×10 DOT BK)	B020030103B11	41
			for E1C	
C	963 0048 200	Screw (2S 3×10 ZNY/BH)	B020030101B10	5
D	960 9008 417	Screw (3S 4×8 ZNY/BH)	B028940081B10	4
E	963 0048 307	Screw (2S 4×8 DOT BK)	1500040083B10	6
			for Black model	
E	963 9004 012	Screw (2S 4×8 DOT NI)	1500040084B10	6
			for Gold mode	
F	963 9004 009	Screw (2S 3×14 WASHER ZNY/HH)	B018230141H10	15
G	960 9008 420	Screw (2S 3×8 WASHER)	1500001456010	1
H	963 0018 104	Screw (2S 3×17 ZNY/BH)	B020030171B10	2
I	963 9004 025	Screw (3S 4×6 ZNY/BH)	B020740061B10	6
J	963 9004 041	Screw (2S 3×5 ZNY/BH)	B020030051B10	2
			for E1,E1H,E1T,E2,E1C	

PACKING VIEW

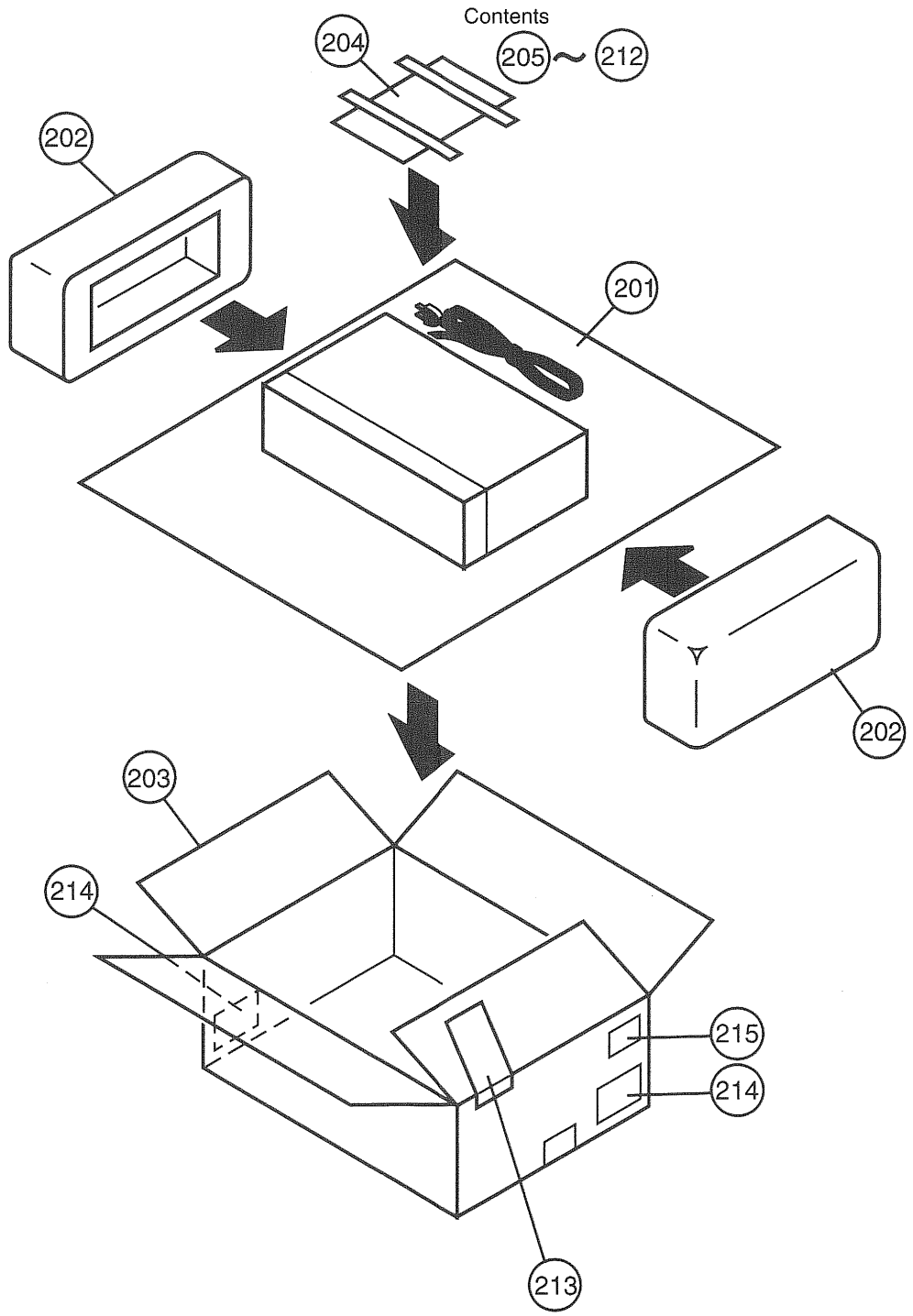

PARTS LIST OF PACKING & ACCESSORIES

Note: The symbols in the column "Remarks" indicate the following destinations.
E3: U.S.A. model, Csnada model
EU: U.S.A. model (AVR-881)
E2: Europe model
E1: Asia model
E1C: China model
E1H: Hong Kong model
E1T: Taiwan R.O.C. model

Ref. No.	Part No.	Part Name	Remarks	Q'ty
201	960 0185 601	Set poly bag	6330210019000	1
202	960 0185 504	Cushion	6230210124000	1
203	963 0054 511	Carton case	6007210140010 for E3,E2	1
203	963 0054 566	Carton case	6007210140040 for EU	1
203	963 0054 524	Carton case	6007210140030 for E1,E1C,E1T	1
203	963 0054 537	Carton case	6007210150020 for E1H	1
204	963 0045 106	Poly bag	6330000240000	1
205	963 0054 618	Instruction manual	5113598006 for E3,EU	1
205	963 0054 621	Instruction manual	5113599005 for E2	1
205	963 0054 650	Instruction manual	5113621009 for E1,E1C,E1H,E1T	1
205	963 0054 647	Instruction manual	5113623007 for E1C	1
206	515 0867 101	S.S. list	5777001620011	1
207	963 0052 306	AM loop antenna	E605010090000	1
208	963 0052 209	FM antenna	E605000030010	1
209	963 0043 001	Remocon RC-874	8300874000010	1
210	—	Battery (R6P/AA)	G670001R50010	2
211	963 0052 704	FM antenna adapter	L109000180010	1
212	963 0061 300	AC plug adapter	L10928300310A for E1T	1
213	515 0817 009	DEL Warranty home	5778001470070 for E3,EU	1
214	—	Control label	5500014920010	2
215	—	UPC label	5507002340010 for E3	1
215	—	UPC label	5507002340050 for EU	1
215	—	EAN label	5507002340040 for E2(Black model)	1
215	—	EAN label	5507002340030 for E2(Gold model)	1
★	513 3322 003	Label (RDS,RADIO TEXT)	for E2	2
★	—	Label (CCIB)	5500020160030 for E1C	2
★	513 3341 000	Carton label (A)	for E1,E1C,E1H,E1T	1
★	513 3342 009	Carton label (B)	for E1,E1C,E1H,E1T	1
★	513 9111 001	Color label (Gold)	for Gold mode	2
★	963 0055 905	Pad	6240210004000 for E1H	2

LOCK DIAGRAMS

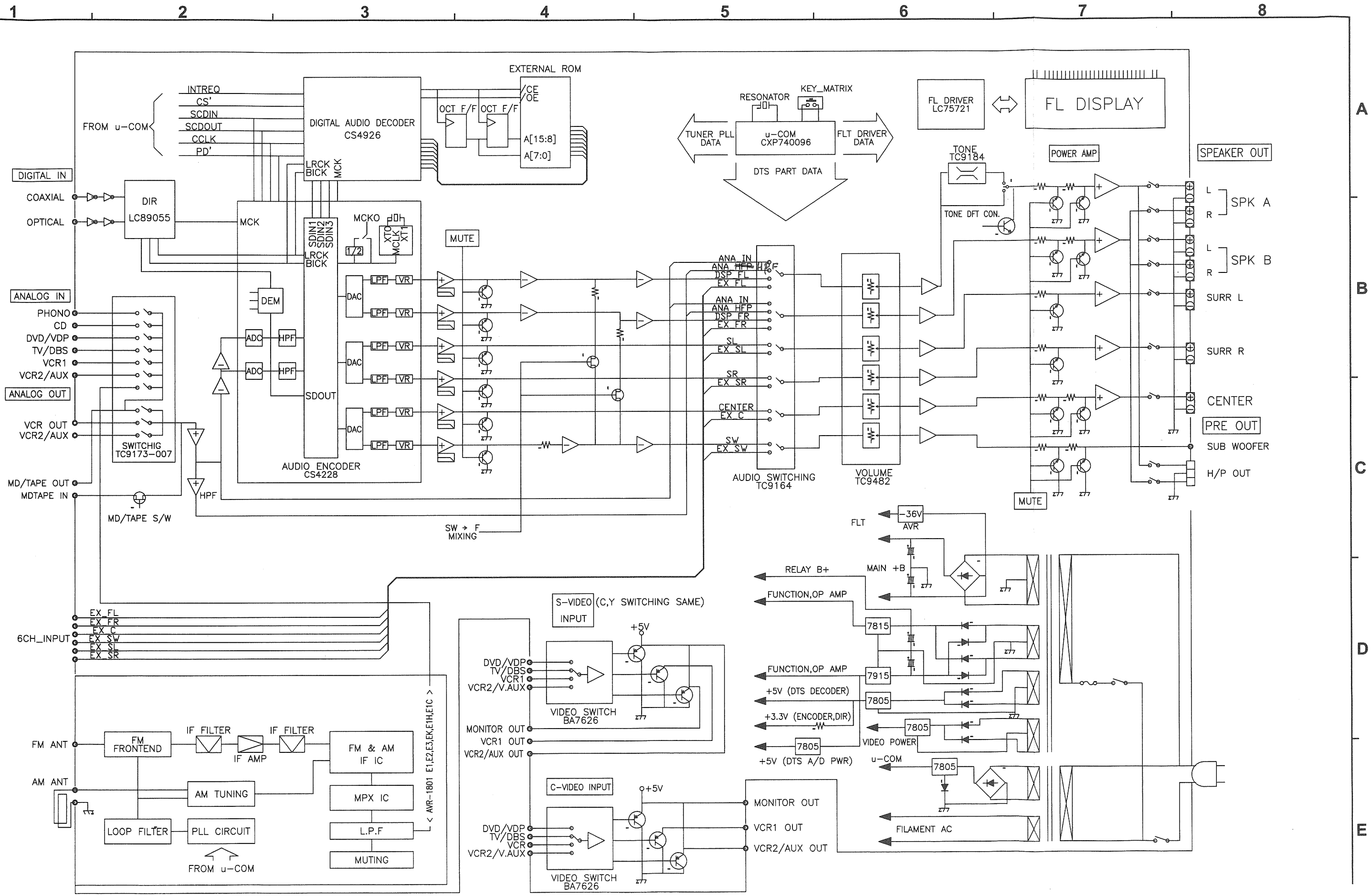

WIRING DIAGRAM

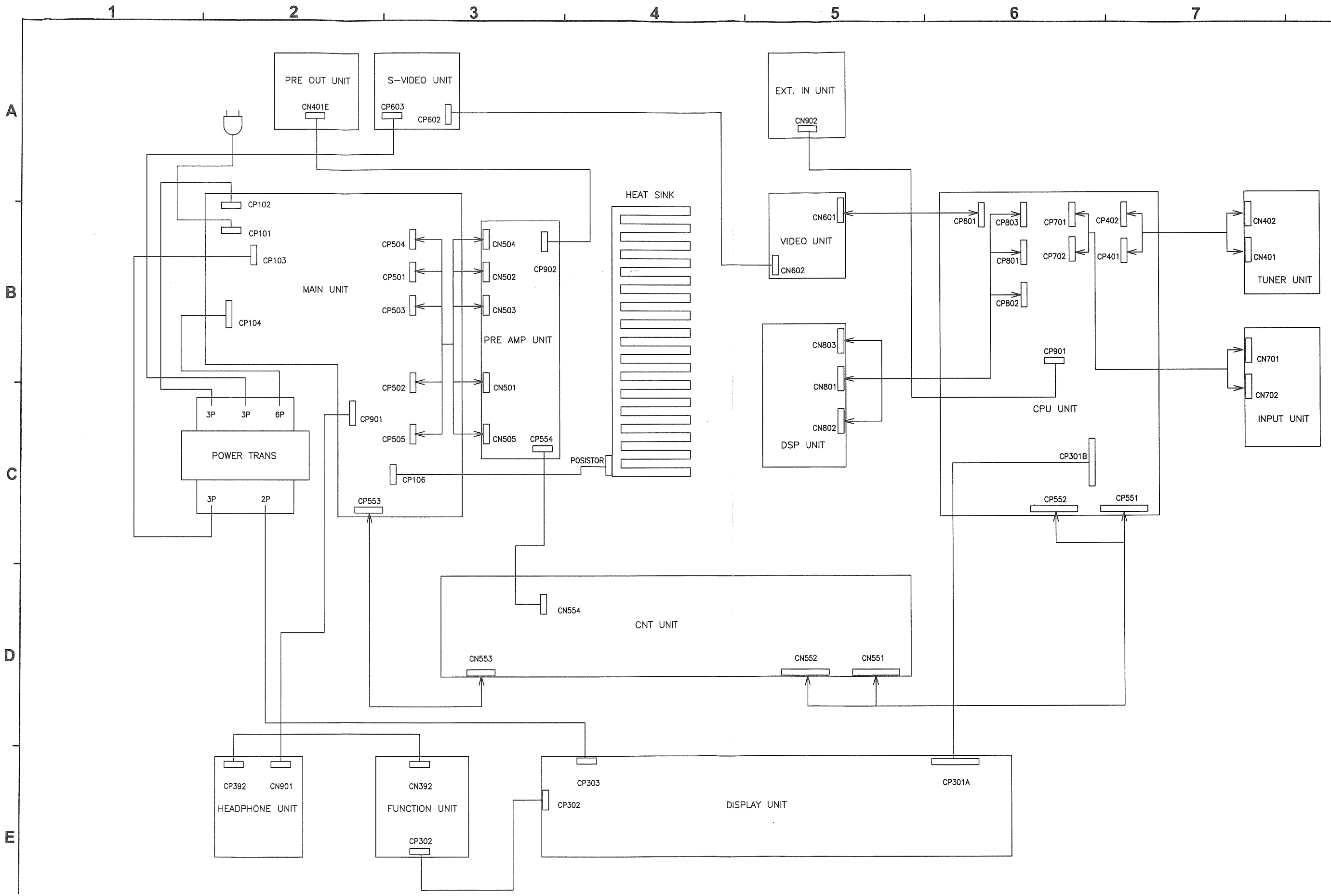

SCHEMATIC DIAGRAMS (1/8)

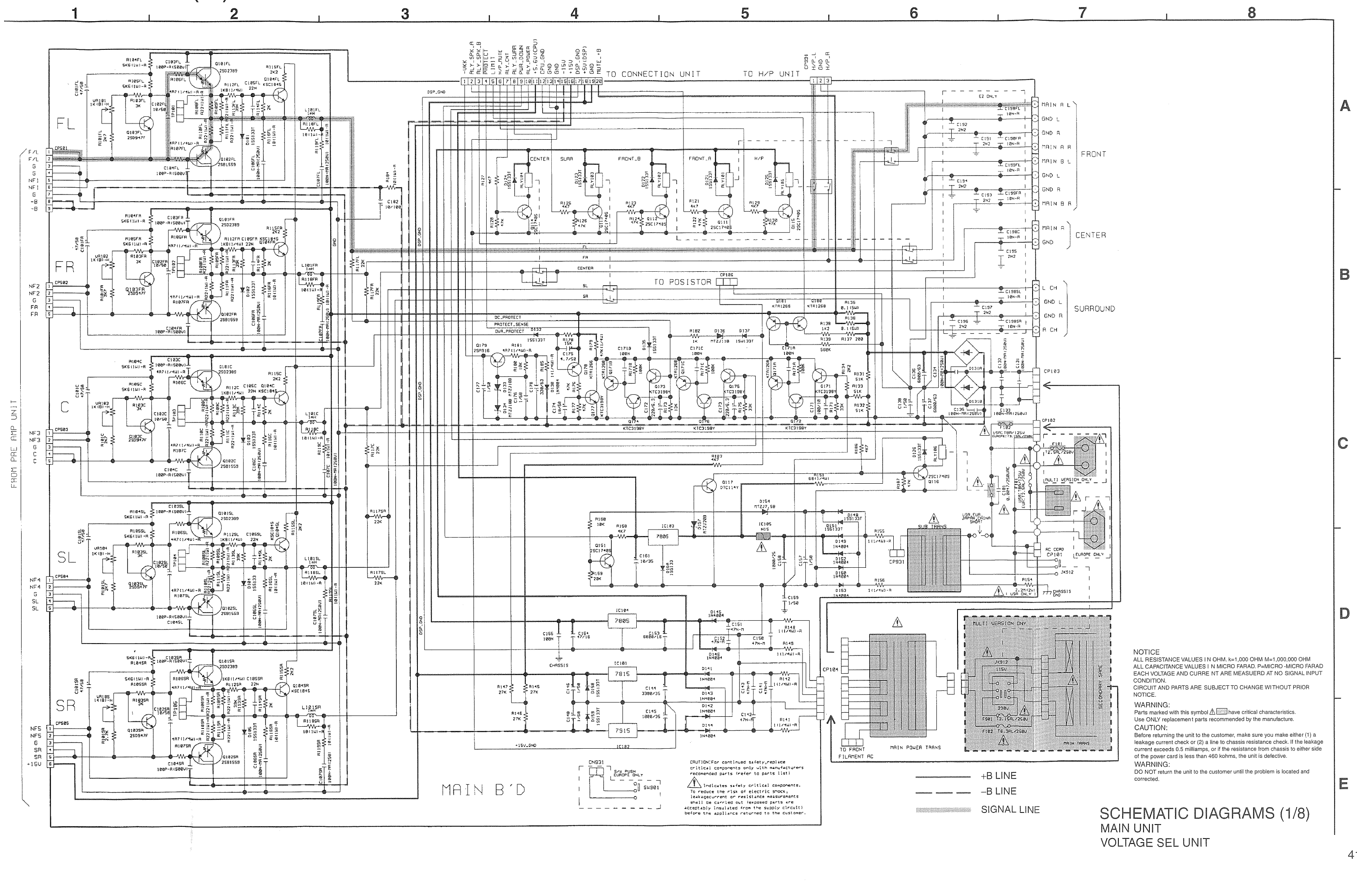

NOTICE
ALL RESISTANCE VALUES I N OHM. k=1,000 OHM M=1,000,000 OHM
ALL CAPACITANCE VALUES I N MICRO FARAD. P=MICRO -MICRO FARAD
EACH VOLTAGE AND CURRE NT ARE MEASUERD AT NO SIGNAL INPUT CONDITION.
CIRCUIT AND PARTS ARE SUBJECT TO CHANGE WITHOUT PRIOR NOTICE.

WARNING:
Parts marked with this symbol ⚠ have critical characteristics.
Use ONLY replacement parts recommended by the manufacture.

CAUTION:
Before returning the unit to the customer, make sure you make either (1) a leakage current check or (2) a line to chassis resistance check. If the leakage current exceeds 0.5 milliamps, or if the resistance from chassis to either side of the power card is less than 460 kohms, the unit is defective.

WARNING:
DO NOT return the unit to the customer until the problem is located and corrected.

CAUTION:For continued safety,replace critical components only with manufacturers recomended parts (refer to parts list)
⚠ indicates safety critical components.
To reduce the risk of electric smock, leakagecurrent or resistance measurements shall be carried out (exposed parts are acceptably insulated from the supply circuit) before the appliance returned to the customer.

SCHEMATIC DIAGRAMS (1/8)
MAIN UNIT
VOLTAGE SEL UNIT

SCHEMATIC DIAGRAMS (2/8)

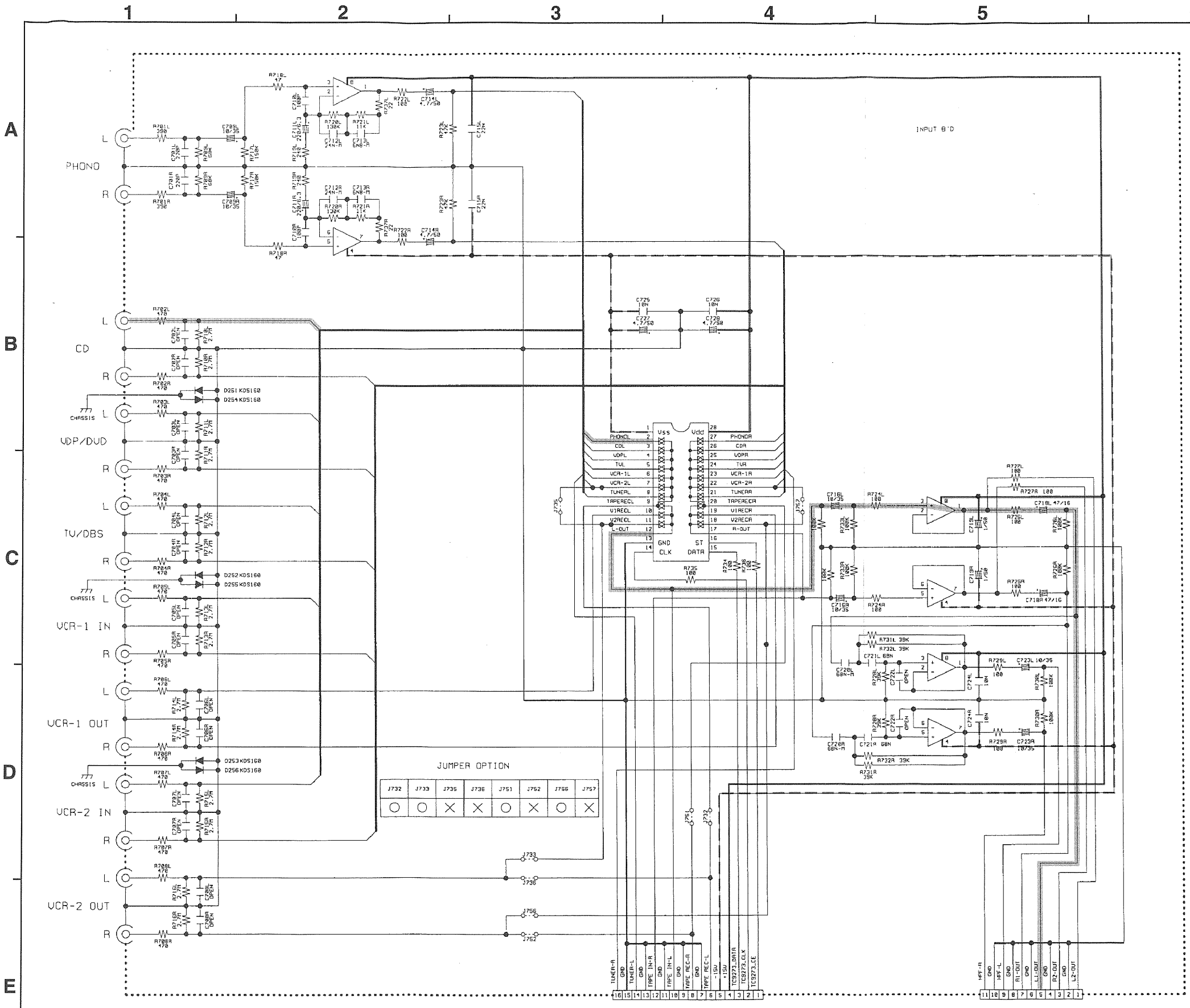

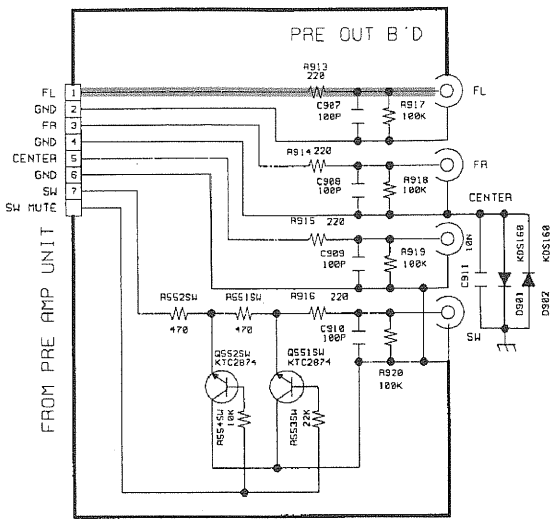

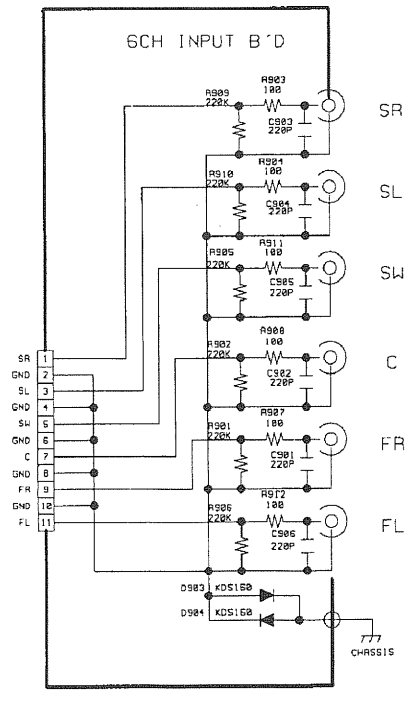

+B LINE

–B LINE

SIGNAL LINE

NOTICE

ALL RESISTANCE VALUES I N OHM. k=1,000 OHM M=1,000,000 OHM
ALL CAPACITANCE VALUES I N MICRO FARAD. P=MICRO -MICRO FARA
EACH VOLTAGE AND CURRE NT ARE MEASUERD AT NO SIGNAL INPU
CONDITION.
CIRCUIT AND PARTS ARE SUBJECT TO CHANGE WITHOUT PRIOR
NOTICE.

WARNING:

Parts marked with this symbol ⚠ have critical characteristics.
Use ONLY replacement parts recommended by the manufacture.

CAUTION:

Before returning the unit to the customer, make sure you make either (1) a
leakage current check or (2) a line to chassis resistance check. If the leaka
current exceeds 0.5 milliamps, or if the resistance from chassis to either sid
of the power card is less than 460 kohms, the unit is defective.

WARNING:

DO NOT return the unit to the customer until the problem is located and
corrected.

SCHEMATIC DIAGRAMS (2/8)
INPUT UNIT

SCHEMATIC DIAGRAMS (3/8)

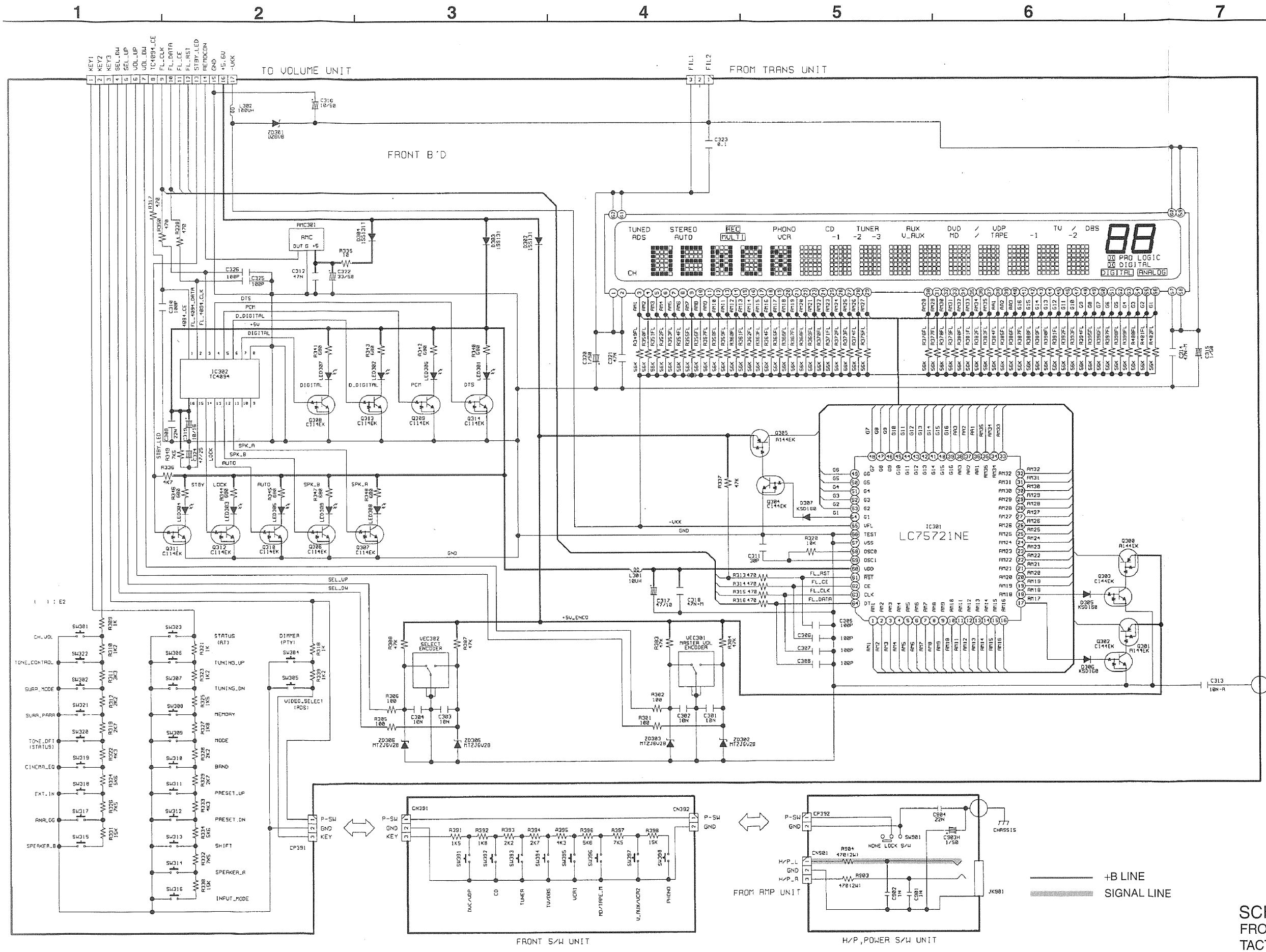

NOTICE
ALL RESISTANCE VALUES I N OHM. k=1,000 OHM M=1,000,000 OHM
ALL CAPACITANCE VALUES I N MICRO FARAD. P=MICRO -MICRO FARAD
EACH VOLTAGE AND CURRE NT ARE MEASUERD AT NO SIGNAL INPUT CONDITION.
CIRCUIT AND PARTS ARE SUBJECT TO CHANGE WITHOUT PRIOR NOTICE.

WARNING:
Parts marked with this symbol ⚠ have critical characteristics.
Use ONLY replacement parts recommended by the manufacture.

CAUTION:
Before returning the unit to the customer, make sure you make either (1) a leakage current check or (2) a line to chassis resistance check. If the leakage current exceeds 0.5 milliamps, or if the resistance from chassis to either side of the power card is less than 460 kohms, the unit is defective.

WARNING:
DO NOT return the unit to the customer until the problem is located and corrected.

SCHEMATIC DIAGRAMS (3/8)
FRONT UNIT
TACT S/W UNIT
H/P, POWER S/W UNIT

SCHEMATIC DIAGRAMS (4/8)

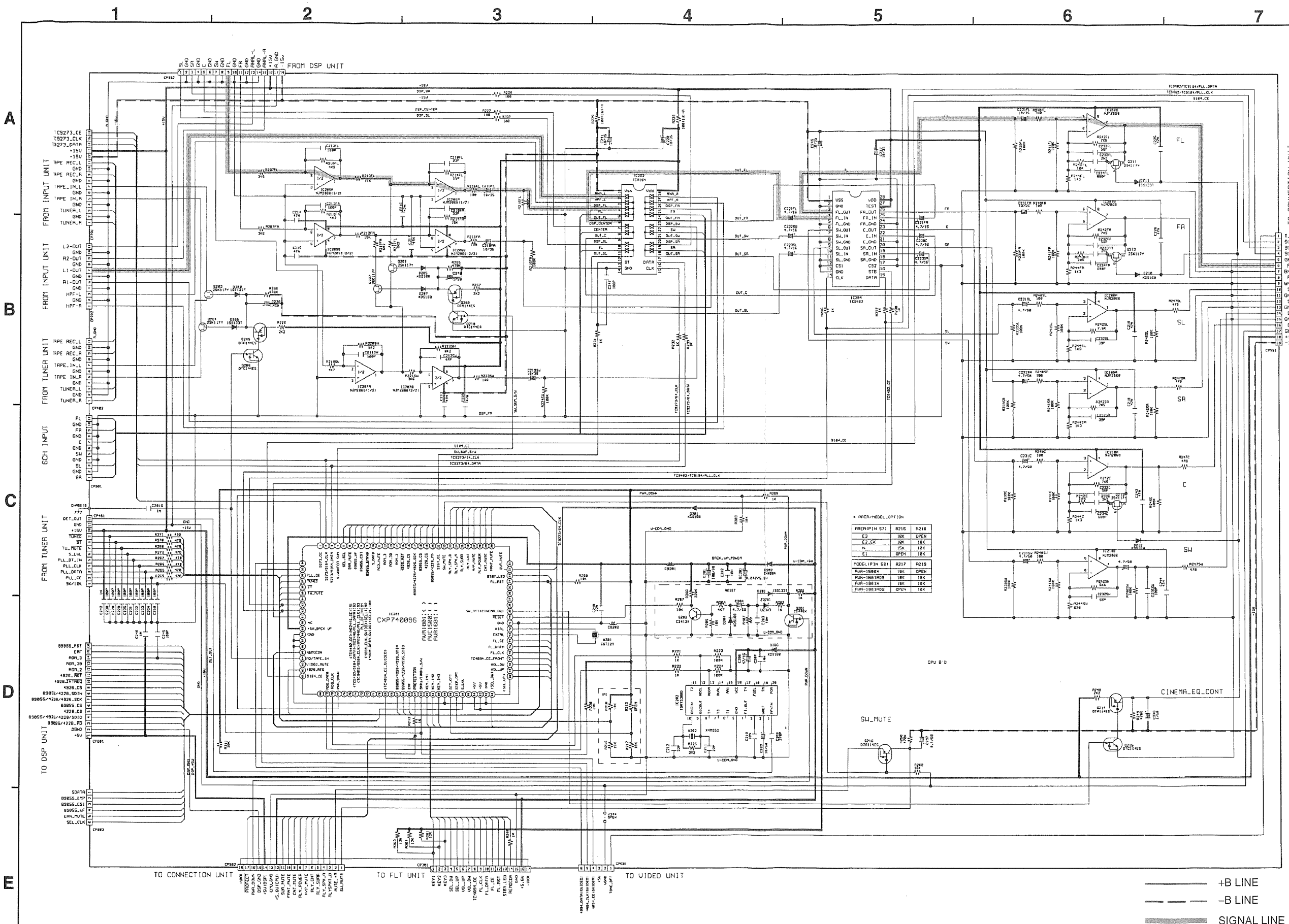

SCHEMATIC DIAGRAMS (4/8)
INPUT UNIT

NOTICE
ALL RESISTANCE VALUES I N OHM. k=1,000 OHM M=1,000,000 O
ALL CAPACITANCE VALUES I N MICRO FARAD. P=MICRO -MICRO
EACH VOLTAGE AND CURRE NT ARE MEASUERD AT NO SIGNA
CONDITION.
CIRCUIT AND PARTS ARE SUBJECT TO CHANGE WITHOUT PR
NOTICE.

WARNING:
Parts marked with this symbol ⚠ have critical characteristics.
Use ONLY replacement parts recommended by the manufacture.

CAUTION:
Before returning the unit to the customer, make sure you make eithe
leakage current check or (2) a line to chassis resistance check. If th
current exceeds 0.5 milliamps, or if the resistance from chassis to ei
of the power card is less than 460 kohms, the unit is defective.

WARNING:
DO NOT return the unit to the customer until the problem is located
corrected.

SCHEMATIC DIAGRAMS (5/8)

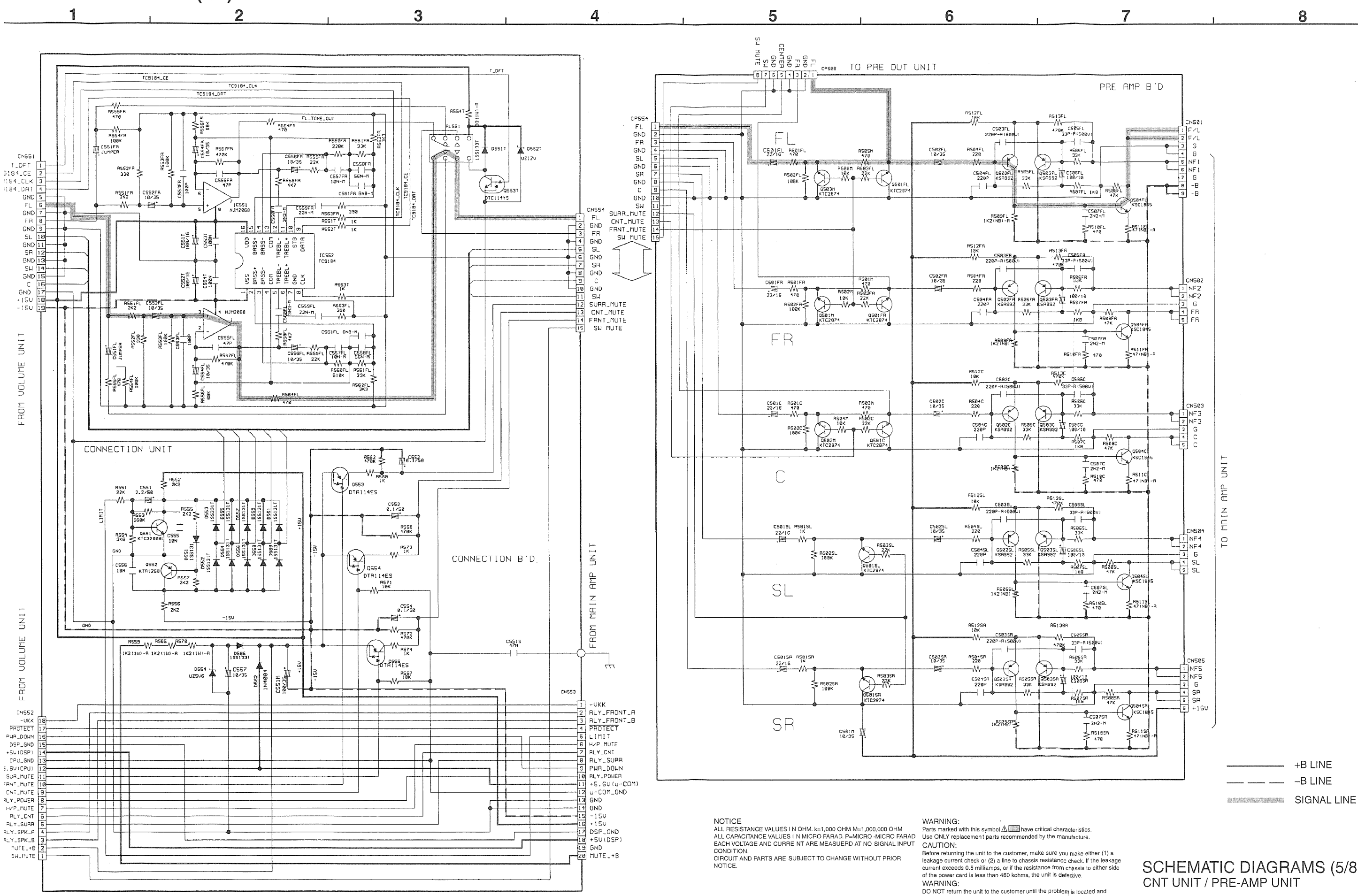

NOTICE
ALL RESISTANCE VALUES I N OHM. k=1,000 OHM M=1,000,000 OHM
ALL CAPACITANCE VALUES I N MICRO FARAD. P=MICRO -MICRO FARAD
EACH VOLTAGE AND CURRE NT ARE MEASUERD AT NO SIGNAL INPUT CONDITION.
CIRCUIT AND PARTS ARE SUBJECT TO CHANGE WITHOUT PRIOR NOTICE.

WARNING:
Parts marked with this symbol ⚠ have critical characteristics.
Use ONLY replacement parts recommended by the manufacture.

CAUTION:
Before returning the unit to the customer, make sure you make either (1) a leakage current check or (2) a line to chassis resistance check. If the leakage current exceeds 0.5 milliamps, or if the resistance from chassis to either side of the power card is less than 460 kohms, the unit is defective.

WARNING:
DO NOT return the unit to the customer until the problem is located and corrected.

SCHEMATIC DIAGRAMS (5/8)
CNT UNIT / PRE-AMP UNIT

SCHEMATIC DIAGRAMS (6/8)

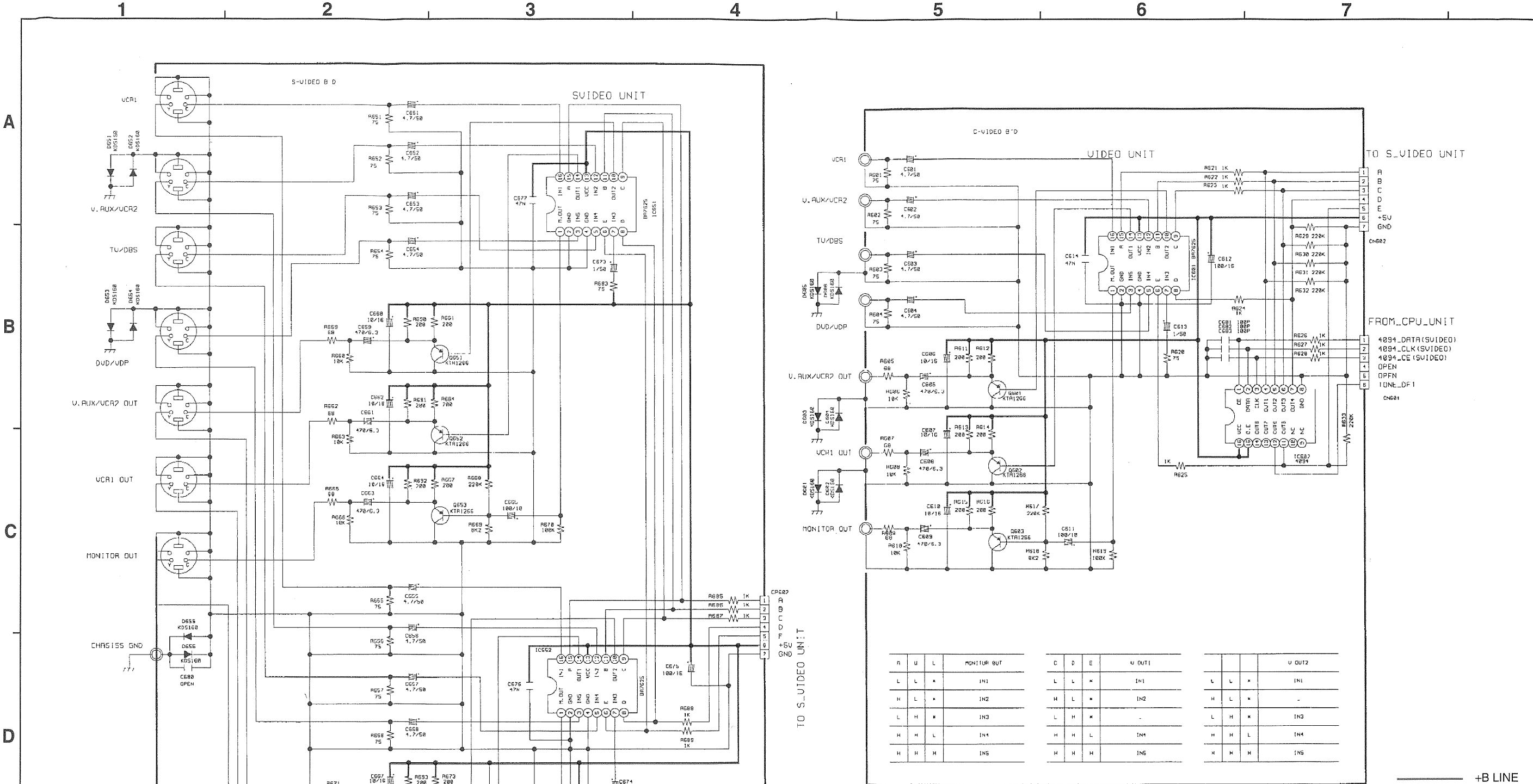

NOTICE
ALL RESISTANCE VALUES I N OHM. k=1,000 OHM M=1,000,000 OHM
ALL CAPACITANCE VALUES I N MICRO FARAD. P=MICRO -MICRO FARAD
EACH VOLTAGE AND CURRE NT ARE MEASUERD AT NO SIGNAL INPUT CONDITION.
CIRCUIT AND PARTS ARE SUBJECT TO CHANGE WITHOUT PRIOR NOTICE.

WARNING:
Parts marked with this symbol ⚠ ▒ have critical characteristics.
Use ONLY replacement parts recommended by the manufacture.

CAUTION:
Before returning the unit to the customer, make sure you make either (1) a leakage current check or (2) a line to chassis resistance check. If the leakage current exceeds 0.5 milliamps, or if the resistance from chassis to either side of the power card is less than 460 kohms, the unit is defective.

WARNING:
DO NOT return the unit to the customer until the problem is located and corrected.

SCHEMATIC DIAGRAMS (6/8)
VIDEO UNIT / S-VIDEO UNIT

SCHEMATIC DIAGRAMS (7/8)

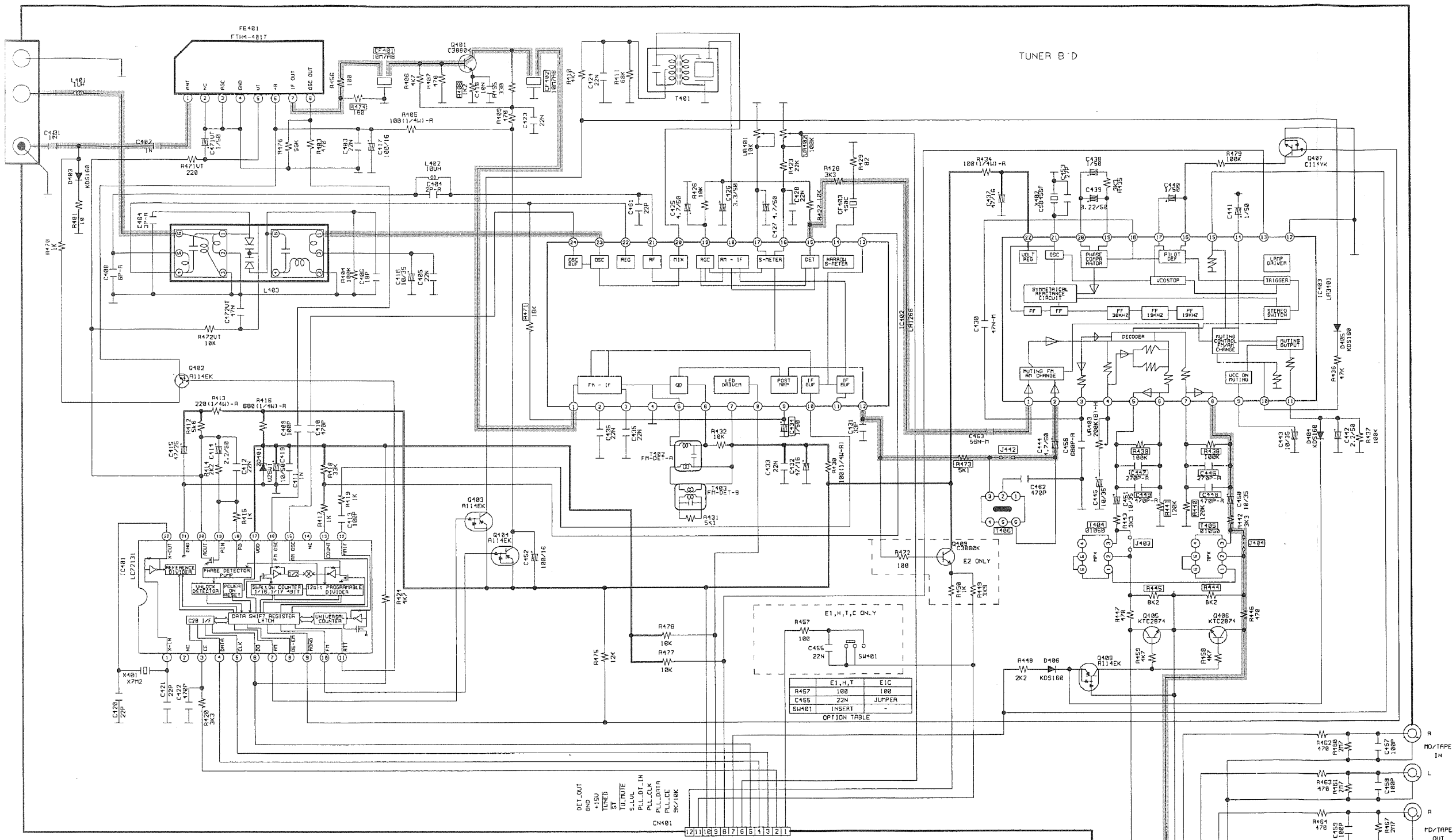

	R-NO.	E3	E2	E1,C,H,T
※1	CF401,CF402	SFE10.7MA8	SFE10.7MS3	SFE10.7MS3
※2	R474	-	180	-
※3	R408	1.2K	680	1.2K
※4	R471	18K	39K	39K
※5	VR402	100KB	100KB	50KB
※6	C434	1/50	0.33/50	0.33/50

	R-NO.	E3	E2	E1,C,H,T
※7	J442	JUMPER	-	JUMPER
※8	T406	-	INSERT	-
※9	C462	-	470P	-
※10	R438,R439	100K	180K	100K
※11	C446,C447	270P	270P	180P
※12	C448,C449	470P	-	330P

	R-NO.	E3	E2	E1,C,H,T
※13	R440,R441	120K	220K	120K
※14	R442,R443	3.3K	2.2K	3.3K
※15	J403,J404	JUMPER	-	JUMPER
※16	T404,T405	-	INSERT	-
※17	R444,R445	8.2K	3.3K	8.2K
※18	R446,R447	JUMPER	470	JUMPER
※19	R437	JUMPER	5K1	JUMPER

+B LINE

SIGNAL LINE

NOTICE
ALL RESISTANCE VALUES I N OHM. k=1,000 OHM M=1,000,000 OHM
ALL CAPACITANCE VALUES I N MICRO FARAD. P=MICRO -MICRO FARAD
EACH VOLTAGE AND CURRE NT ARE MEASUERD AT NO SIGNAL INPUT CONDITION.
CIRCUIT AND PARTS ARE SUBJECT TO CHANGE WITHOUT PRIOR NOTICE.

WARNING:
Parts marked with this symbol ⚠ have critical characteristics.
Use ONLY replacement parts recommended by the manufacture.

CAUTION:
Before returning the unit to the customer, make sure you make either (1) a leakage current check or (2) a line to chassis resistance check. If the leakage current exceeds 0.5 milliamps, or if the resistance from chassis to either side of the power card is less than 460 kohms, the unit is defective.

WARNING:
DO NOT return the unit to the customer until the problem is located and corrected.

SCHEMATIC DIAGRAMS (7/8)
TUNER UNIT

SCHEMATIC DIAGRAMS (8/8)

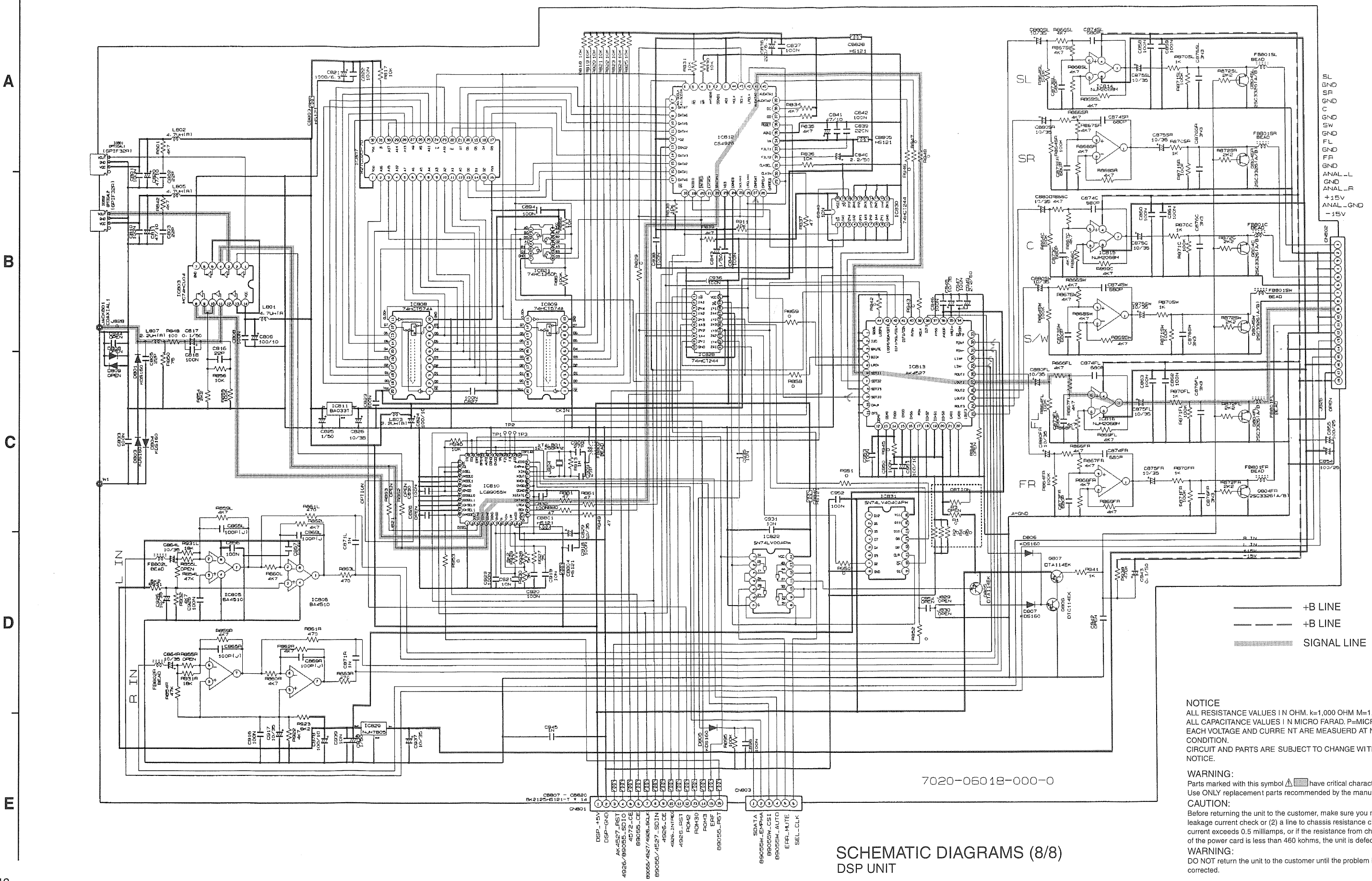

NOTICE

ALL RESISTANCE VALUES I N OHM. k=1,000 OHM M=1,000,000 OHM
ALL CAPACITANCE VALUES I N MICRO FARAD. P=MICRO -MICRO FARA
EACH VOLTAGE AND CURRE NT ARE MEASUERD AT NO SIGNAL INPU
CONDITION.
CIRCUIT AND PARTS ARE SUBJECT TO CHANGE WITHOUT PRIOR
NOTICE.

WARNING:

Parts marked with this symbol ⚠ have critical characteristics.
Use ONLY replacement parts recommended by the manufacture.

CAUTION:

Before returning the unit to the customer, make sure you make either (1) a leakage current check or (2) a line to chassis resistance check. If the leakag current exceeds 0.5 milliamps, or if the resistance from chassis to either side of the power card is less than 460 kohms, the unit is defective.

WARNING:

DO NOT return the unit to the customer until the problem is located and corrected.

SCHEMATIC DIAGRAMS (8/8)

DSP UNIT