PRINTED IN USA 177 5M

instruction manual

dbx 117

dynamic range enhancer

117/119 MANUAL

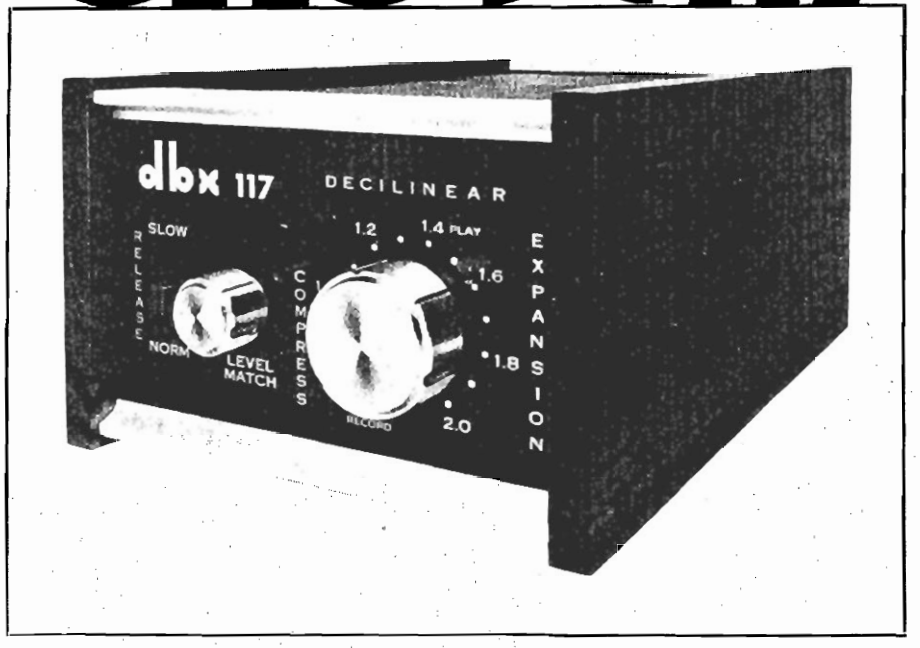

dbx inc.
296 Newton Street
Waltham, Massachusetts 02154
617-899-8090

Dear Audio Enthusiast,

The engineers who developed the DBX 117 are enthusiasts too. Now you have purchased a DBX 117, and we wish you many hours of listening enjoyment.

Our owner's manual contains full details on how to operate your unit, plus an explanation of how it works. After reading the manual, we hope you will experiment with the DBX 117 until it is a familiar tool for dynamic range modification.

Sincerely, DBX Inc.

The development of two scientifically optimum electronic devices make the DBX 117 the world's first successful dynamic range modifier. The first device is a gain control element with very low noise and decilinear[1] response. The second is a true R.M.S.[2] detector which responds to audio signals in much the same way that the human ear responds to sounds. These two devices together overcome the previous limitations and disadvantages of expanders or compressors. With the DBX 117 you can expand or compress the dynamic range and reduce the apparent background noise of any audio signal.

Dynamic range is the relationship or ratio between the softest and the loudest sound in a musical passage. The ratio is conveniently expressed in decibels or dB[3].

Music in live performance often has a dynamic range of 70 to 90 dB. This range is somewhat greater than can be accomodated by records, tapes, and FM broadcasting. A 40 to 50 dynamic range is all that these media normally achieve. Recording engineers therefore compress the dynamic range of music until it fits the recording medium. The result is that all the sounds are there, the softest and the loudest, but no longer in their original relationship. The impact of the original performance has been diminished and in many instances you are left with a flat, dull recording.

The DBX 117 can reexpand the limited dynamics of tapes, records, and FM broadcasts and bring your music back towards its original dynamics. The 117 is easily connected to your receiver or integrated amplifier-preamplifier (see figure 1 or 2).

[1] decilinear – (t.m. DBX Inc.) linear in decibels.

[2] R.M.S. – root mean square: the sum of the powers of each separate frequency component of the signal.

[3] decibel (dB) –1/10 of a Bel. The logarithm of the ratio between two signal levels. Hence 10dB = 10:1 ratio of power; 20dB = 100:1 ratio; 80dB = 100,000,000:1 ratio; etc.

SPECIFICATIONS

COMPRESSION & EXPANSION
Continuous from 1.4 compression slope (14 dB output change/20 dB input change) to 2.0 expansion slope (20 dB output change/10 dB input change).

DYNAMIC RANGE
120 dB input or output

INPUT NOISE
–110 dBm typical, –100 dBm maximum

INPUT LEVEL
Maximum input signal in excess of 30 Volts RMS

INPUT IMPEDANCE
50K ohms

OUTPUT LEVEL
Maximum output 10 Volts RMS open circuit; +17 dBm into 600 ohms.

OUTPUT IMPEDANCE
500 ohms

DISTORTION
0.5% maximum @20 Hz, 0.2% typical above 50 Hz for complete cycle of compression and expansion; 1.2% @20 Hz for 2:1 expansion; .05% typical @ 1KHz and above for any setting of controls.
(3 Volts RMS or less input or output.)

FREQUENCY RESPONSE
+0, –1 dB 20 Hz – 20 KHz

ATTACK TIME
50 dB/m.Sec. maximum initial attack rate @1.4 expansion. 12 mSec. to 65% of final value @ any setting of compression or expansion. Adjusted to be within integrating time of human ear within the constraints of reasonable low frequency distortion.

RELEASE (DECAY) TIME
Constant rate 140 dB/sec.(Norm) or 50 dB/sec.(Slow) @ 1.4 expansion.

LEVEL MATCH CONTROL
Unity gain point may be varied from 100 mV. to 1 Volt.

POWER CONSUMPTION
115 VAC. 50-60 Hz 2 Watts.

SIZE
3 ¾" H, 5 ¾" W, 9" L.

WEIGHT
4.5 lbs.

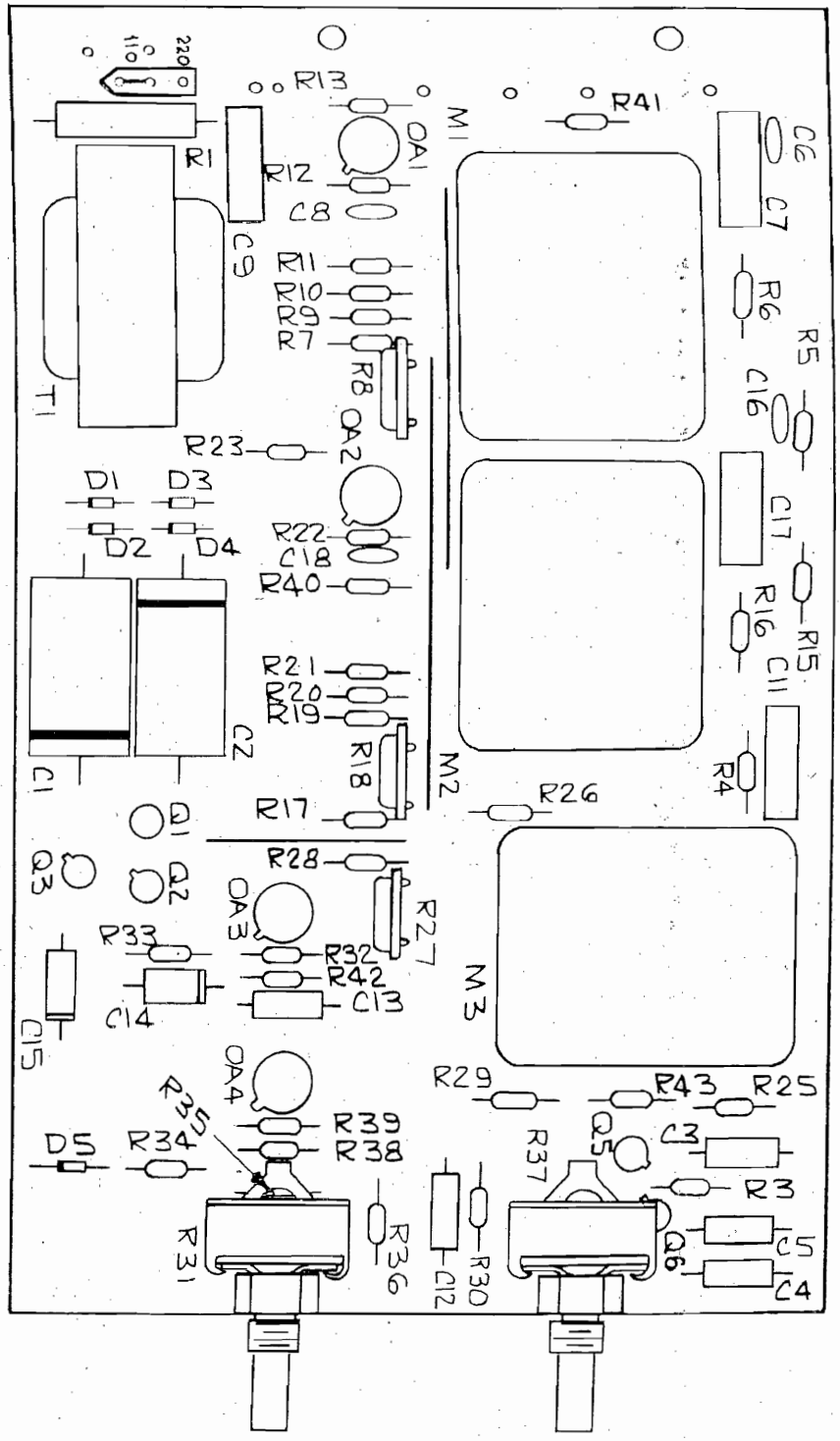

FIGURE 6. CIRCUIT BOARD LAYOUT, TOP VIEW.

BRIEF OPERATING INSTRUCTIONS –

Expanding records, tapes, and FM:

You will most often use the 117 to expand the dynamic range of recorded program material. If you have an integrated preamplifier, a recommended connection diagram is shown in figure 1. Figure 2 shows an alternate diagram which may be used with a separate preamp and amplifier combination. The first connection allows for easy A-B comparison between expanded and unexpanded program at the flip of the tape-monitor switch on your preamp. Choose some musical program material, set the EXPRESSION (expansion-compression) control to 1.4 EXPANSION and switch the tape-monitor switch on your preamp between TAPE and NORMAL while adjusting the LEVEL MATCH control on the 117 until there is a minimum volume change at the *average* loudness of the music. An alternate method of adjustment is to rotate the EXPRESSION control back and forth from 1.0 to 2.0 EXPANSION while adjusting the LEVEL MATCH control as before. This method will be necessary with the connection of figure 2. In any case, the setting of the LEVEL MATCH is not critical and merely determines the signal level at which the gain through the 117 is unity.

A good final setting for the EXPRESSION control will depend on the music material. Between 1.1 and 1.3 EXPANSION is usual for classical material, the lower setting being used for the best records with excellent dynamic range. 1.2 to as high as 1.5 is acceptable for pop or rock recordings where much more limiting is employed.

Experiment with different settings on the same piece of music; as you become more familiar with the 117's operation and effect, you will find the dynamic range which most satisfies your listening requirements. In any case do not be tempted to use too large an expansion factor. Too much expansion will produce an unnatural sound. The 117's effect is subtle; let it grow on you.

SLOW/NORM(AL) switch controls the speed with which the 117 follows changes in the loudness of the program material. The NORM position is optimum for most material and is *always* used for recording and playback of DBX recorded and live material. (See noise reduction section.) The SLOW position is useful for these types of program: speech, music with speech (operatic material), some music with rapid and frequent loudness changes, and music which has been severely limited with a slow recovery time limiter.

WHEN TO USE COMPRESSION:

Compressed dynamic range is useful whenever it is desirable to maintain moderate listening levels while retaining audibility of quiet passages. Such situations as quiet background music, music listening with high ambient noise levels (factories, stores, parties) and conference recording will benefit by 1.2 or 1.4 compression ratios. (Conference *recording* should be done with the EXPRESSION control at 1.4 COMPRESSION and played back at 1.0 or normal.)

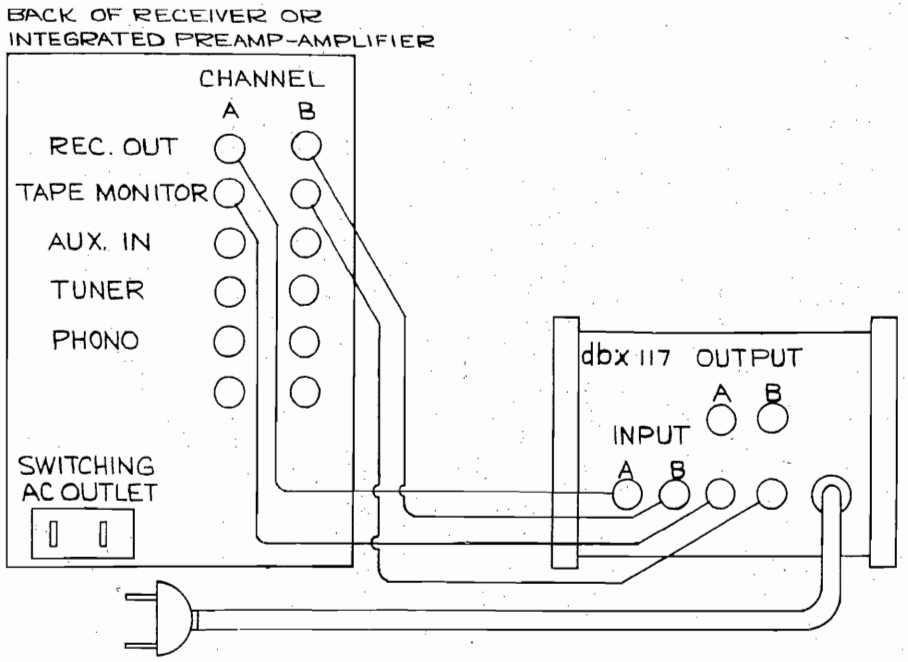

FIGURE 1. RECOMMENDED CONNECTION DIAGRAM FOR MODEL 117. UNSWITCHED OUTLET MAY BE USED AS UNIT DRAWS ONLY 1.2 WATTS.

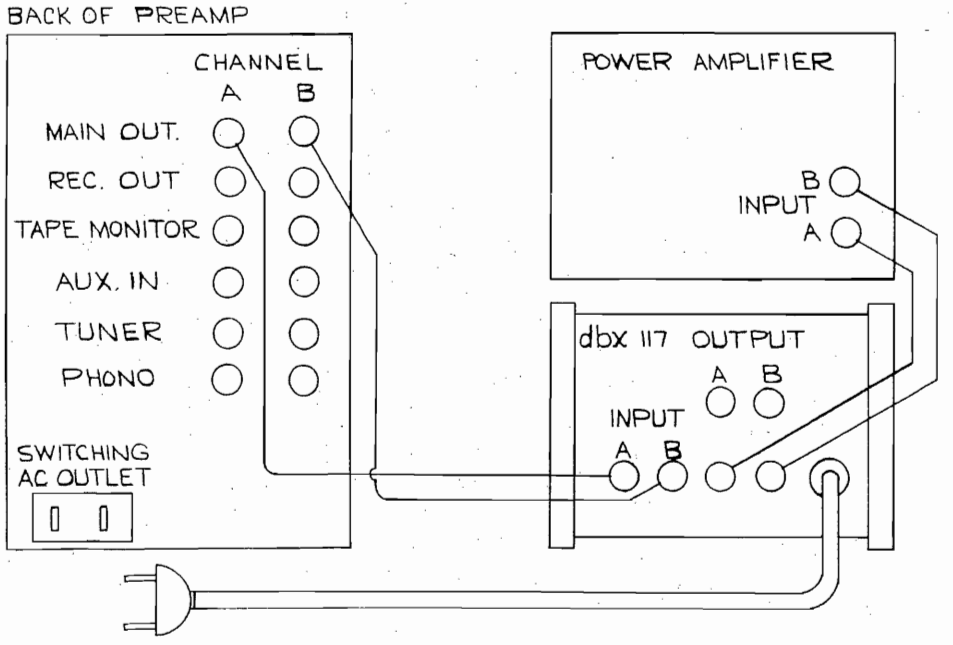

FIGURE 2. ALTERNATIVE CONNECTION FOR SEPARATE PREAMP AND POWER AMP.

MODIFICATIONS FOR FUN AND PROFIT:

The DBX 117 contains a pair of excellent voltage controlled amplifiers and a RMS level sensor. Many additional functions can be performed with this combination. These include threshold type compression and limiting, noise gating, adaptive filters, multi-segment compressor-expanders with separately adjustable factors in different parts of the dynamic spectrum, special dynamic effect boxes for electric musical instruments, and wide range decibel meters. Several of these simpler adaptations will be described. Those skilled in operational amplifier arts will easily be able to devise many others.

The compression factor may be extended to infinity by shorting out R35. The expansion factor may be increased to 3:1 by reducing R40. Doing both will result in a compression factor beyond infinity! The output will actually decrease when the input increases causing dynamic inversion. Recalibration of EXPRESSION control will be necessary.

Precisely doubling the expansion and compression slope is easily accomplished for a monaural source by routing the signal through the DBX 117 twice.

The NORMAL release ratio is presently optimum for most uses. Release rate may be increased by removing C13. Release rate may be decreased by increasing the value of C14 and decreasing the value of R42.

The DBX 117's level sensing circuit is responsive to the sum total of input spectrum from 20Hz to 20KHz. Should you wish to make it less sensitive to low frequency sounds, decrease the value of C11 to .033 mfd or even .01 mfd.

When wider dynamic level tracking is required the low level excursion limit may be removed from OA3 by removing D5 and shorting R33. The output for metering and alternative control systems may be taken from the junction of R34, 32, 35, and 38. This signal may be fed to any external transfer function control circuit and the output of said circuit may be re-inserted by opening R40 and feeding into the junction of R40 and R41 with an external 220 ohm resistor.

Obviously, any significant modification will void the warranty of your DBX 117. We will repair at your cost modified units whenever possible but *please* let us know the nature of the modifications you have made and which of them, if any, you want removed. Please do not ask us to design modifications for you. Much less sophisticated professional products which can be replaced with modified DBX 117's cost five to ten times as much. If you need help, find a local source. You will have more fun and our engineering department can spend its time designing exciting new products.

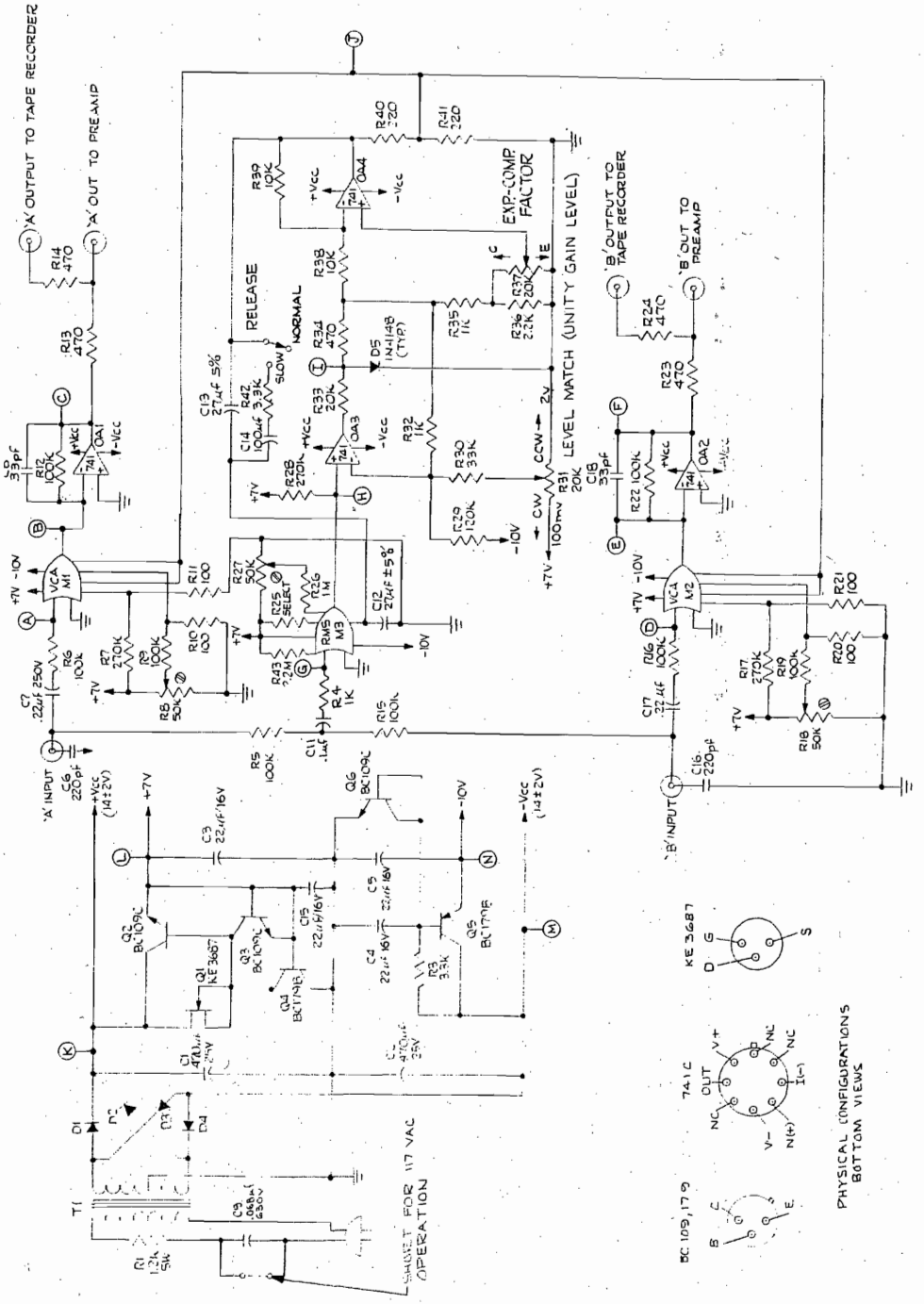

FIGURE 5. SCHEMATIC DIAGRAM.

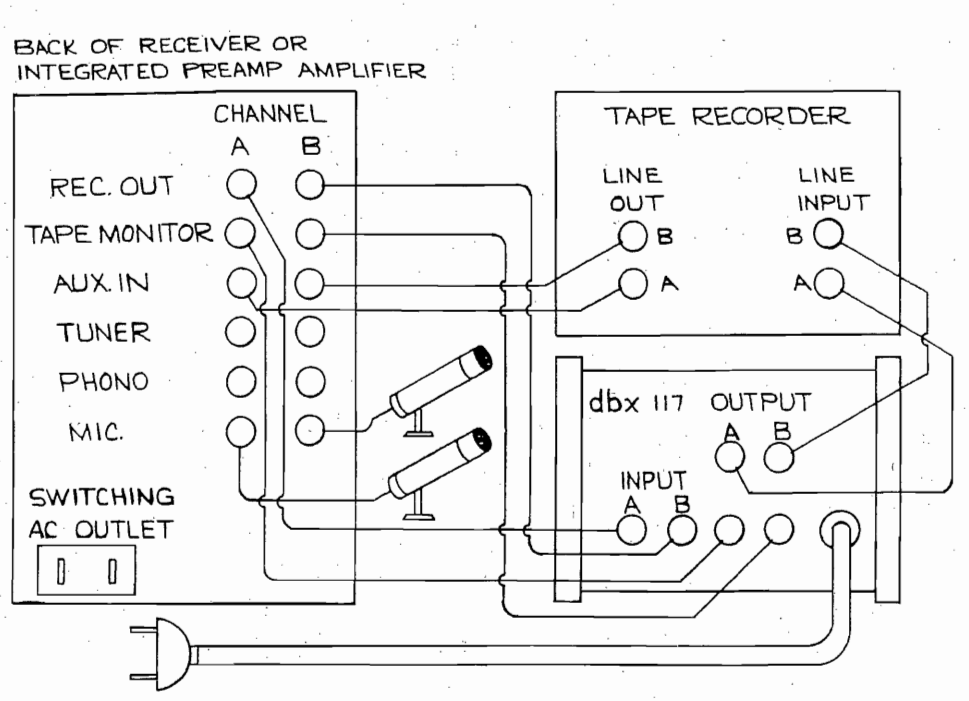

FIGURE 3. TAPE RECORDING CONNECTION DIAGRAM

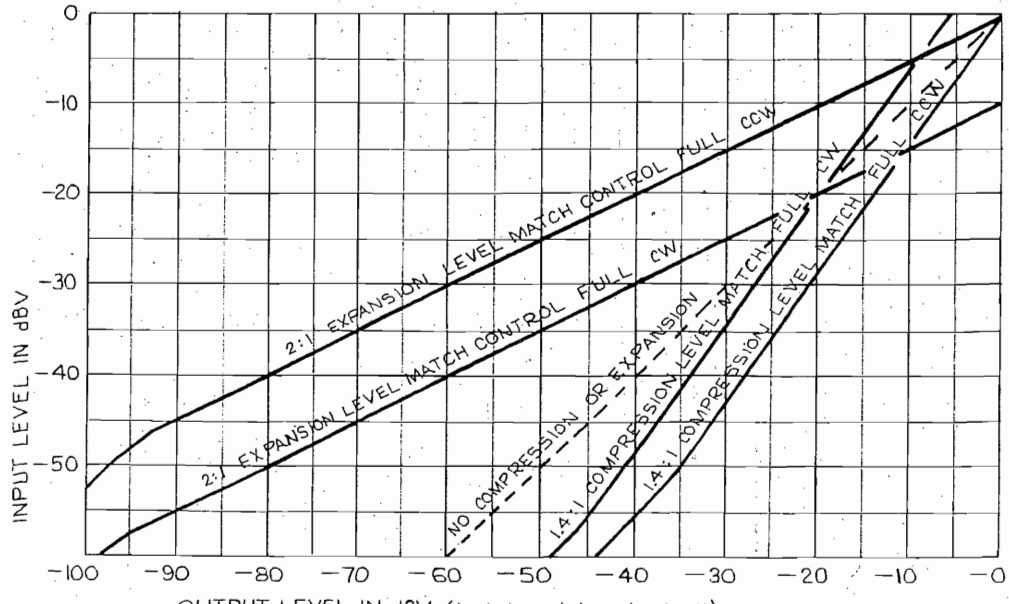

FIG. 4 dbx 117 INPUT/OUTPUT RELATIONSHIP

USING THE DBX 117 AS A NOISE REDUCTION SYSTEM:

If you copy discs or record FM programs on tape, the DBX 117 can give your recordings an additional 20 dB of signal to background noise ratio. This means that your tapes can be as noise free as the source material. To use the 117 as a noise reduction system, follow the connection diagram of Figure 3. The EXPRESSION control on the 117 is set to 1.4 COMPRESSION for recording (RECORD position). The LEVEL MATCH control should be set to the middle of its rotation. The SLOW/NORM switch is set to NORM. The selector switch on your preamplifier is set to the desired source (tuner, phono, etc.) and the recorder controls are adjusted in the usual manner. To play back a compressed tape, first be sure that the tape recorder TAPE-SOURCE switch is in the TAPE position and that the recorder is otherwise adjusted for playback. Switch the selector switch on the preamplifier to AUX and the tape monitor switch to the MONITOR position. Set the LEVEL MATCH control on the 117 to the middle of its rotation and the EXPRESSION control to 1.4 EXPANSION (PLAY position) and the compressed tape will be precisely expanded. It is possible to gain added dynamic range from this tape simply by advancing the EXPRESSION control. A 2.0 EXPANSION will give the same dynamic range from 1.4 compressed tape as a 1.4 expansion of the original source material. In this way you can have quieter tapes and enhanced dynamic range, too.

DBX AND DOLBY "B":

The DBX and Dolby noise reduction systems process signals differently and thus are not compatible. That is, a Dolby encoded recording may not be decoded using a DBX expander. However, the two systems are complementary and may be used together to obtain even greater dynamic range improvement for tape recording than is possible with either system by itself. For tape recording, simply compress the signal first with the DBX 117, then Dolby encode. For playback, Dolby decode and then expand with the DBX 117. Dolby levels are set in the usual manner. Prerecorded Dolby material may be further expanded (after decoding) using the DBX 117, although this wider dynamic range material will need only slight (1.1 – 1.2) expansion.

PROGRAM USE	SETTING OF EXPRESSION CONTROL		SUGGESTED GAIN CONTROL SETTING
Expand Classical Rec.	1.1–1.4	EXPANSION	MIDDLE POSITION
Expand Pop, Rock, FM	1.2–1.5	EXPANSION	MIDDLE POSITION
Background Music	1.2–1.4	COMPRESSION	MIDDLE POSITION
Record Classical Music	1.4	COMPRESSION	MIDDLE POSITION
Playback Classical Music	1.4–1.8	EXPANSION	MIDDLE POSITION
Record Pops Disc.	1.4	COMPRESSION	MIDDLE POSITION
Playback Pops Disc.	1.4–2.0	EXPANSION	MIDDLE POSITION
Record Live Material	1.2–1.4	COMPRESSION	MIDDLE POSITION
Playback Live Material	1.2–1.4	EXPANSION	MIDDLE POSITION
Conference Recording	1.4	COMPRESSION	MIDDLE POSITION
Conference Playback	1.0–1.4	COMPRESSION	NO EFFECT AT 1.0
Bypass Model 117	1.0		NO EFFECT AT 1.0

TABLE 1

CIRCUIT ADJUSTMENTS:

R8, R18, and R27 have been factory set for minimum even order harmonic distortion. To readjust, connect a low distortion 100Hz oscillator set to 1 volt to the inputs and observe distortion at the outputs.

First set the EXPANSION-COMPRESSION control to 1.0 and the level match control to the middle of its range. Observe output A and adjust R8 for minimum 200Hz output. Repeat with output B and R18.

Now set the EXPANSION control to 2.0 and adjust R27 for minimum 200Hz output on both A and B.

TROUBLE SHOOTING:

1. Check power supply voltages. Errors of 20% from nominal are normal, but much greater errors indicate a circuit problem. If the ±15 volt outputs are low, it indicates either excessive load due to a fault in the other circuits or a problem with C1, C2, D1, D2, D3, D4, or T1.

2. Check OA1, OA2, OA3, and OA4 for input and output offset. The outputs at the right end of amplifier symbols should have DC components well under .1 volt. The difference between the + and – inputs should be under 10 millivolts.

3. Check the input points to modules M1, M2, and M3. Values up to ±30 mV are acceptable. M3 may be further checked by observing the output tracking with input changes. Observe the output at the junction of R29, 30, and 32. It should be OV ±60 mV with 2 volts at either A or B input.

This limited service information should be sufficient for those familiar with operational amplifier and feedback circuits to repair most failures. DBX has a liberal warranty policy and can accomplish almost all warranty and out of warranty repairs much more rapidly than the average Hi-Fi service department. Furthermore, our familiarity with our products permits low cost on all normal repairs beyond the scope of our warranty. We therefore recommend factory service whenever practical. See our warranty statement for details.

SERVICE

CIRCUIT DESCRIPTION:

The DBX 117 is a compressor-expander capable of linear decibel compression and expansion over an extremely wide dynamic range. Gain is controlled by a pair of high performance voltage controlled amplifiers in response to level as measured by a RMS level sensor.

The voltage controlled amplifiers control input-output current ratio in response to a signal. The input is a virtual ground with a ±20 mv offset range. The output is connected to a 741 integrated circuit operational amplifier connected as a current to voltage convertor. Gain is near unity with zero control voltage and varies by 3 mv/dB in response to the voltage at the junction of R40 and R41. Bipolar symmetry is controlled by R8 and R18.

The RMS module also has a virtual ground input with a similar offset tolerance. C12 is the RMS averaging capacitor with C13 acting to keep the response time appropriate to the setting of the expansion-compression control. C14 is used for additional time averaging for slow recovery with decreasing signal level. R27 controls the relationship between negative and positive signal level sensing. The output of the RMS module is at the junction of R28 and OA3. Output is −6mv per decibel increase. OA3 is a unity gain follower to transform the high impedance output of M3 to a suitable level for control functions. R33, D5, and R34 control the maximum increase in gain at low levels to a value which has been found to avoid loop oscillations due to input-output wiring capacitance in the associated pre and power amplifiers. OA4 is a control amplifier with −1 gain for the EXPAND setting of R37 and +1/3 gain for the COMPRESS setting of R37.

The power supply has a conventional center tapped bridge rectifier to supply ±15 volts unregulated to the I.C. operational amplifiers. Q1, Q2, Q3, and Q4 form a low noise regulator to supply +7 volts to the modules and control circuits. Q5 and Q6 regulate −10 volts for modules and control circuits. Primary series resistor R1 limits the maximum fault current for any defect in the secondary of T1 to a value which will not exceed the thermal ratings of R1 or T1, thereby making fusing unnecessary. C9 is shorted for 115 Volt operation by a jumper which is removed for 230 Volt service.

MORE ABOUT COMPRESSION AND EXPANSION:

Compression has been used in the recording industry since the advent of electronic recording. A special kind of compression known as peak-limiting is used in broadcast transmission to allow more effective modulation without exceeding bandwidth limits. Compression is used on telephone lines to improve long distance intelligibility. The name of the game is dynamic range, an area in which recording and transmission media are, comparatively speaking, lacking. The human ear has a short term working dynamic range of over 100 dB. A good tape recorder or disc recording may have a 65 dB dynamic range. The only way to capture the 80-90 dB dynamic range of a live orchestral performance is to use some form of signal compression. There are several methods available to the recording engineer. The first and most obvious (but not always easiest in practice) is to have the conductor deliberately limit the orchestra's dynamics. This works with well trained musicians and a cooperative conductor, but with much of today's more spontaneous music, this is not possible. An engineer will use electronic means of dynamic range compression, the most common of which are "peak" limiting and "gain riding". Peak limiters are compressors which have very fast response to signals which exceed a preset level or threshold. All complex sounds have a peak level which exceeds their average level – the level as measured by a sound level meter or as perceived by the ear – by as much as 20 dB for very short periods. These peaks contribute considerably to the realism of sound when they are properly recorded and reproduced; but when reproduced on systems which cannot properly handle them, they are a puzzling source of distortion. The recording engineer may be aware of this problem and rather than have "clean" sound give him a bad name will use a peak limiter to slice off 10 to 15 dB of these peaks.

Gain riding, at the other extreme, involves raising the level of signal to the recorder during quiet passages to avoid losing subtle sounds to tape noise.

Yet another form of dynamic range modification involves the use of linear compression systems – systems which preserve the dynamic relationships from pianissimo to fortissimo by compressing every decibel by the same amount.

What are the effects of these various compression systems in terms of listening experience? Anyone who has experienced the impact of music in live performance knows the importance of orchestral dynamics. All systems of compression detract from the effectiveness of reproduced sound; however, linear compression systems are most tolerable and, furthermore, they allow accurate reconstruction of original dynamic range if the listener wishes. Unfortunately, no compression standard yet exists in the recording or broadcast industry. We at DBX are encouraging a linear decibel compression standard for recording and broadcast transmission simply because it is a more listenable, fully compatible, easily decodable system. Until such a system is adopted, we offer the DBX 117, a linear decibel expander, as the most convenient system for restoring dynamic range to tens of thousands of various systems now in use. An expander (or compressor—its complement) is very simply a combination of a gain changing device and a level measuring device. The gain changing device in our unit is a voltage controlled amplifier (VCA) whose gain in dB is proportional to control voltage. The level sensing device responds to the RMS value of input signal and converts that to a control voltage with a constant volts/decibel characteristic.

This control voltage is fed to the VCA in the right polarity to increase or decrease gain depending on whether we wish to compress or expand the signal. Basically a simple process, the effects of expansion range from subtle to dramatic. On recordings or broadcasts which use the most irregular compression curves, only small amounts of expansion – perhaps 1.1–1.2 – may be used. This will provide 5–10 dB of signal to noise improvement. Recordings on which more linear forms of compression have been employed may tolerate as much as 1.4 expansion. In general, too much expansion will produce a pumping or surging of the program material. Reduce the setting of the EXPRESSION control until a pleasing result is obtained. The connection diagram of figure 2 may not be as desirable as figure 1 if you are accustomed to using bass boost, since this may accentuate pumping. For some circumstances, such as background music for parties, further compression is desirable. Remember that the calibration of the EXPRESSION control is such that the input signal's dynamic range is *multiplied* by the expansion factor and *divided* by the compression factor. Another aspect to consider is that expansion or compression alters the reverberation or decay time of program material – expansion, reducing, and compression lengthening the time. These effects may be useful in the playing or recording of electronic musical instruments. (See modifications section of manual). Public address work is often benefitted by the use of dynamic range alteration although its needs are often more specific. The modification section at the rear of the manual contains instructions for many specific changes.

USE OF THE DBX AS A NOISE REDUCTION SYSTEM:

The 117 works by compressing the dynamic range of the program material to be recorded. Let us assume that we have a program with 70 dB of dynamic range and we wish to record this on a tape recorder whose signal-to-noise ratio (or dynamic range) is 55 dB. In order to avoid overloading the tape at high levels, we must sacrifice 15 dB of the quietest part of our program. This is the region where much of the music's nuances lie. If we were to compress our original program dynamic range to 50 dB, then this range could easily be accomodated by our tape recorder. Playing our program back and expanding its dynamic range by a complementary factor will give us our original dynamic range plus a 7 dB margin over tape background noise.

The DBX 117 can be used whenever you tape. You can expect 10 dB of noise reduction for machines with poor signal-to-noise ratio and as much as 20 dB for machines with very good signal-to-noise ratio.

The following precautions should be observed:

1. Be sure that the record and playback level controls on your tape recorder are not significantly different between channels. If you can calibrate your recorder, you should have equal input/output gain on both channels.
2. Use as small a compression factor as necessary to capture the dynamic range of the material you are recording. A 1.2 compression factor will be adequate for taping records or FM broadcasts on a good open reel machine. Use of the smallest compression factor will insure that modulation of tape noise on playback will be least objectionable.

3. The code to decode cycle of the DBX 117 is very accurate. Errors can occur, however, as a result of tape recorder anomalies such as tape dropout from dirt on the heads, guides, capstan, etc. or the presence of subsonic frequencies in the compressor which are not recorded on the tape. For instance, if a significant amount of low frequency rumble component from a turntable is present at the input of the 117, this may act to gain modulate low level program material. However, since these subsonic components will not be recorded due to the low frequency limitations of the tape recorder, the expander will not see all the information that appeared to the compressor and therefore will not track accurately at low levels. If this problem occurs, a rumble filter should be used ahead of the compressor. Alternately, the sensitivity of the 117 to low frequencies may be decreased by decreasing the value of C11 (see modifications section of manual).
4. The two channels of the DBX 117 are not independent as regards the level sense circuit. This means that although the separation between the two channels is maintained in a stereo recording, the signals present at both inputs together determine the gain change for both channels. This is done to preserve stereo image in the expander mode of operation. However, it is not possible for this reason to *separately* record two channels of compressed information (as in sound-with-sound) and then decode them simultaneously without having the two channels cross modulate one another. If this type of recording is to be done, then two 117's will be necessary to play back two channels properly.

Should it be desirable to monitor a recording made with the DBX 117, it is entirely possible to listen to the compressed material on the tape without expansion. The DBX 117 is as listenable as a compressor as it is as an expander.

RECORDING LIVE MATERIAL:

The DBX 117 may be used to preserve the original dynamic range of live recordings. The success of these recordings is of course dependent on the quality of the recorder used to make them. If a machine with good signal-to-noise ratio is used, the recording will have maximum effectiveness. On a machine with a 60 dB signal-to-noise ratio, you will realize 80 dB of accurate dynamic range. Excellent noise reduction in excess of the capabilities of either system may be realized by combining the DBX 117 and Dolby "B" noise reduction systems. The 117 is used before the Dolby system for recording and after the Dolby for playback. Dolby levels are set in the usual way.

For live recording you will also require a good microphone preamplifier. Care should be exercised to select a preamp-microphone combination which will not degrade the excellent dynamic range of your noise reduction system/tape recorder combination.

THE DBX MODEL 119 SUPPLEMENT TO THE MODEL 117 MANUAL

The DBX 119 was developed for audiophiles and professional sound engineers who need a greater compression range and the capability of expanding or compressing above a pre-set threshold. The model 119 with the exception of the SLOW release rate, will do everything that the model 117 will do; therefore, for operation and theory refer to the DBX 117 Instruction Manual and the paragraphs below which explain the differences and features of the DBX 119.

The compression range of the model 119 has been extended to ∞:1. Infinite compression allows program output level to remain virtually constant regardless of input level. Extreme compression is useful for limiter applications in public address or studio work, for modification of echo or reverberation systems and to augment certain hearing losses. COMPRESSION beyond 1.4:1 is not recommended for tape recorder noise reduction.

The LEVEL MATCH control of the model 117 is called THRESHOLD on the model 119. It performs the same function of setting the level at which gain is unity. The range has been increased about double and is calibrated every 10 dB.

The RELEASE switch of the model 117 has been replaced with a MODE switch on the model 119. The switch has two positions. In the LINEAR mode the DBX 119 operates as a linear compressor or expander just as the DBX 117 does. However, in the ABOVE THRESHOLD mode the unit operates to compress or expand signals only above a pre-set level. This level is set by means of the THRESHOLD control. That portion of the input signal whose RMS level exceeds the level indicated by the THRESHOLD control will be expanded or compressed according to the slope which has been set on the COMPRESSION-EXPANSION control. Operation in the ABOVE THRESHOLD mode is indicated by the red light emitting-diode above the THRESHOLD control which will light whenever program level exceeds threshold. (The light does not operate in the LINEAR mode.)

The ABOVE THRESHOLD mode is useful for expanding some records and pre-recorded tapes. The LINEAR mode must be used for tape recorder noise reduction both for record and playback. Failure to observe this caution will result in unusual dynamics COMPRESSION ABOVE THRESHOLD is useful for preventing amplifier overload and as a limiter in studio or public address applications.

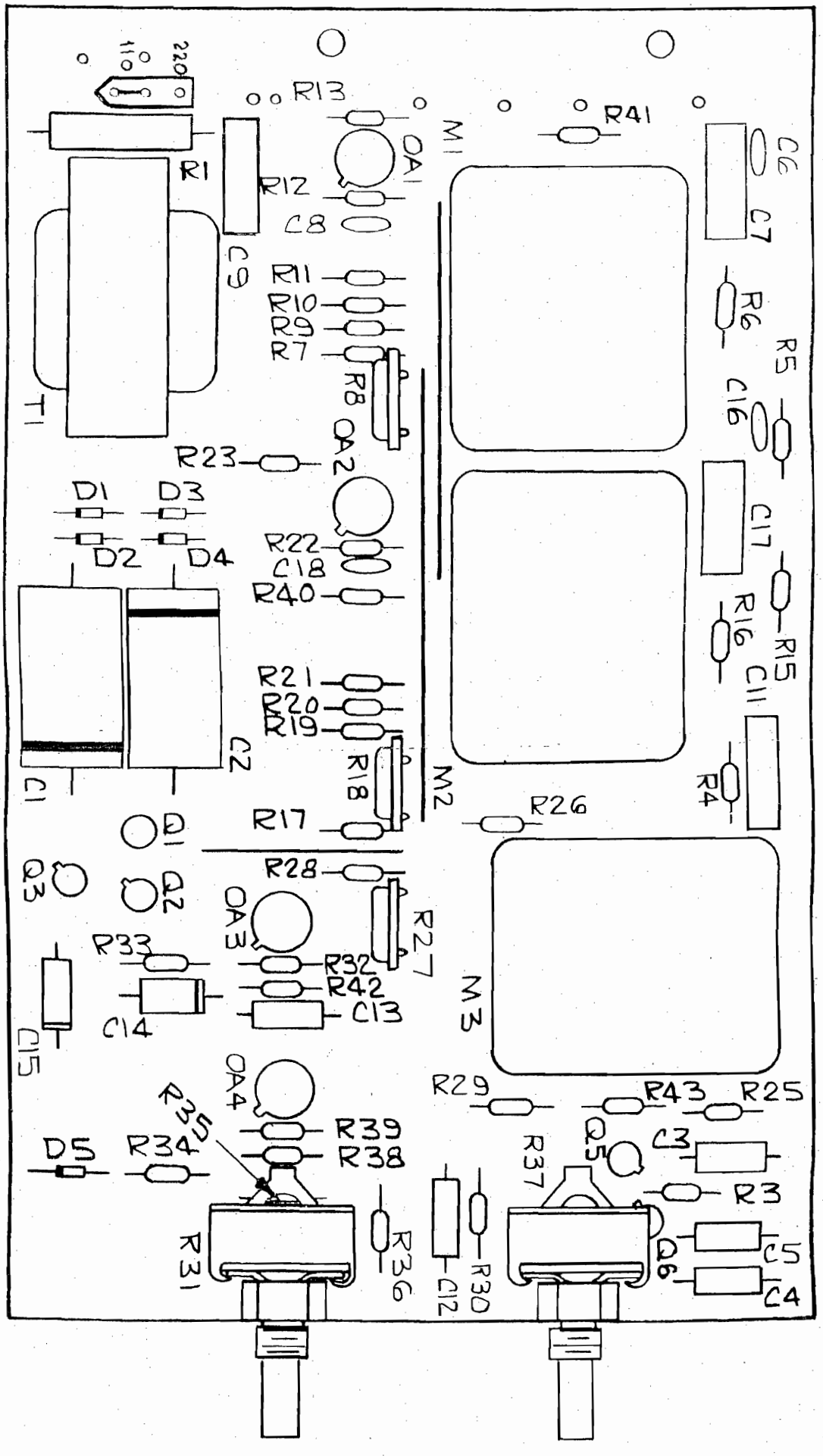

CIRCUIT BOARD LAYOUT, TOP VIEW.

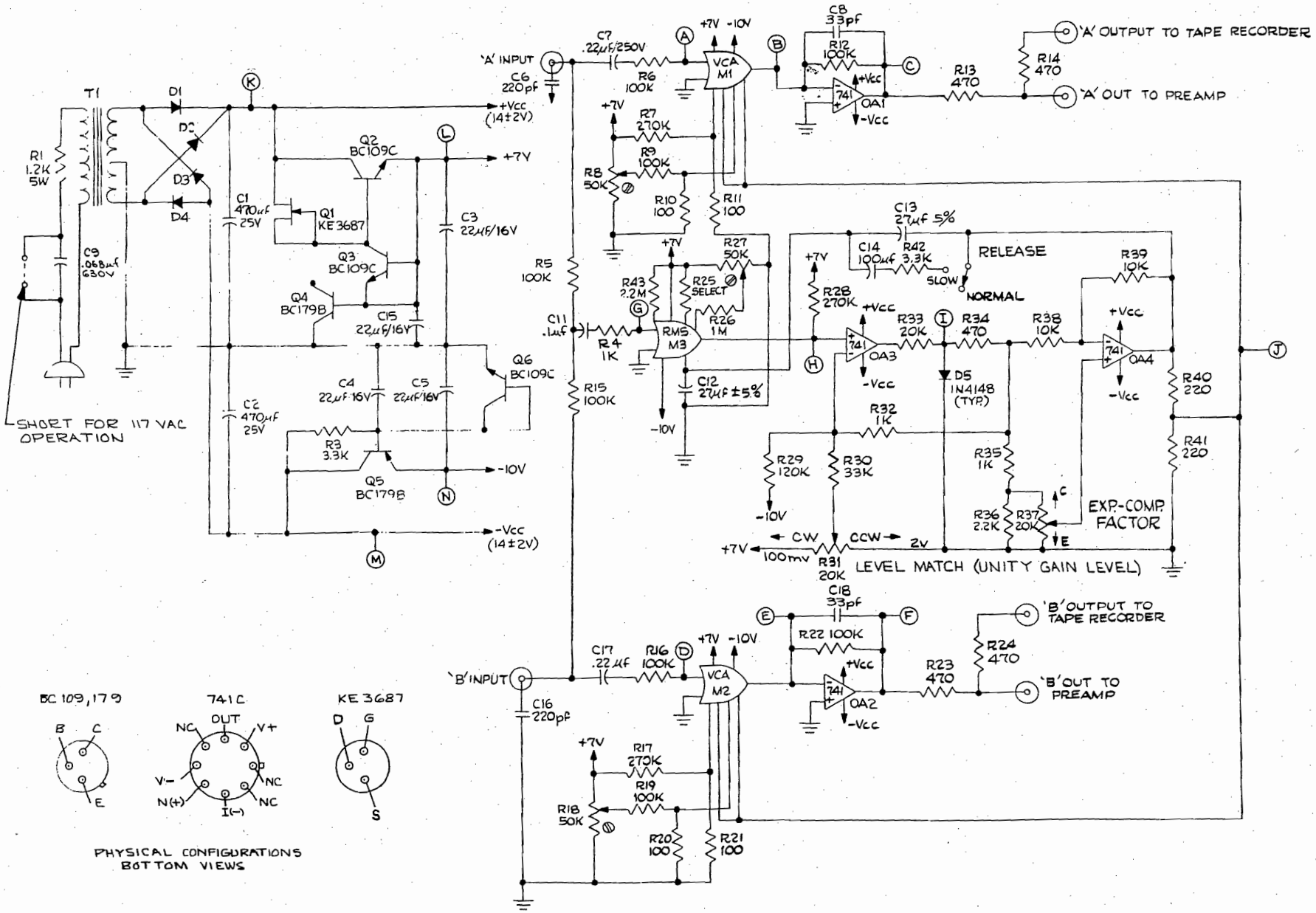

SCHEMATIC DIAGRAM.