

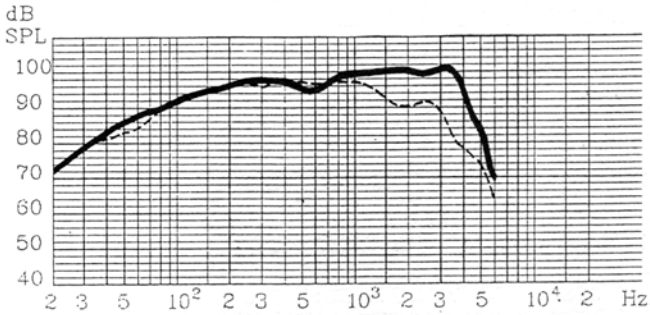

Amplitude frequency response at 1W/1m on axis (continuous trace) and 45° off-axis (unconti-nuous trace). Loudspeaker mounted in free air conditions.

Sound reinforcement speaker AL-20

DESCRIPTION

This 12" cone driver is recommended in all mid-bass applications. It performs reliably in sound reinforcement as well as indoor, fixed installations. Characterized by its 4" aluminum voice coil edge wound onto a kapton form, and the aluminum-magnesium alloy used for molding the dust cover, assure professional performance. Like other D.A.S. sound reinforcement speakers the AL-20 is constructed in an aluminum frame for heavy duty resistance in mounting enclosures.

SPECIFICATIONS:

NOMINAL DIAMETER: 30.5 cm (12")
NOMINAL IMPEDANCE: 8 Ω
PROGRAM POWER (2 hours test) : 400 W
SENSITIVITY SPL (1 W/1 m): 100 dB
EFFICIENCY: 95 dB
FREQUENCY RANGE: 60 Hz - 5 KHz
VOICE COIL DIAMETER: 10.2 cm (4")
VOICE COIL DEPTH: 0.8 cm (0.31")
VOICE COIL MATERIAL: aluminum ribbon
MAGNETIC ASSEMBLY WEIGHT: 8.8 Kg (19.4 lb)
FLUX DENSITY: 1.5 T (15000 Gauss)
FRAME MATERIAL: kapton
BAFFLE CUTOUT DIAMETER: 28.8 cm (11.34")
DEPTH: 14 cm (5.5")
NET WEIGHT: 10 Kg (22 lb)

LARGE SIGNAL PARAMETERS:

THERMALLY LIMITED MAXIMUM INPUT POWER: P_E = 200 W

PEAK DISPLACEMENT LIMIT OF BASS DIAPHRAGM: X_{MAX} = 1.5 mm

PEAK DISPLACEMENT LIMIT OF DRIVER DIAPHRAGM: V_D = 77 cm^3

SMALL SIGNAL PARAMETERS:

FREE AIR RESONANCE FREQUENCY: f_S = 45.21 Hz

TOTAL Q AT f_S: Q_{TS} = 0.37

ELECTROMAGNETIC Q AT f_S: Q_{ES} = 0.42

ELECTROMECHANICAL Q AT f_S: Q_{MS} = 3.42

REFERENCE EFFICIENCY: η_0 = 1.8 %

VOLUME OF AIR HAVING THE SAME ACOUSTICAL COMPLIANCE AS SPEAKER SUSPENSION: V_{AS} = 87 dm^3

RESISTANCE OF SPEAKER VOICE COIL: R_E = 6.5 Ω

EFFECTIVE SURFACE AREA OF DIAPHRAGM: S_D = 0.051 m^2

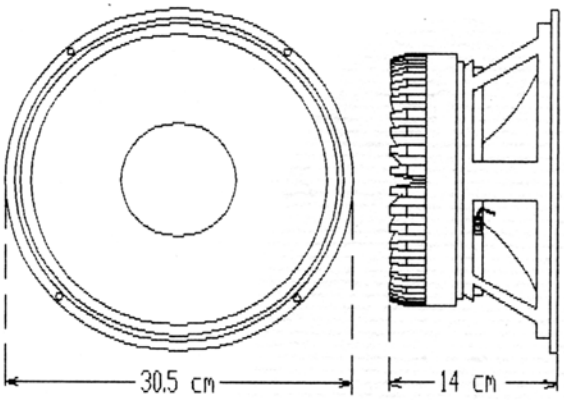

Line drawings with AL-20's dimensions.

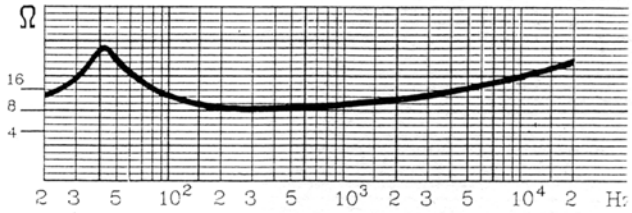

Impedance response.

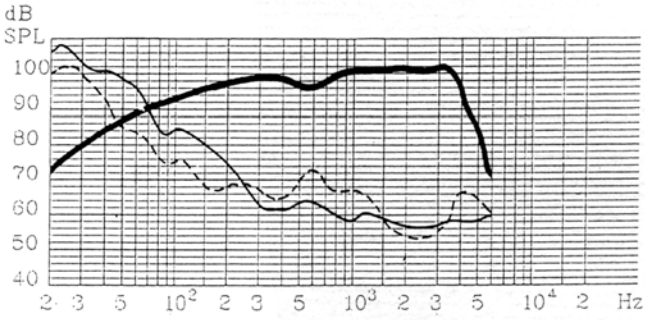

Frequency response at 1W/1m on axis of the fundamental (thick trace), 2nd harmonic (thin trace) and 3rd harmonic (uncontinuous thin trace).

THE A.E.S. STANDARDS

As *sustaining members* of the *Audio Engineering Society* (A.E.S.), D.A.S. Audio, S.A. prints data on all its professional sound products, following their norms and specifications.

All these standards can be found widely commented in several articles which have appeared in some issues of the Journal of the A.E.S. The following ones are particularly interesting:

"A.E.S. Recommended Practice Specification of Loudspeaker Components Used in Professional Audio and Sound Reinforcement." JOURNAL OF THE AUDIO ENGINEERING SOCIETY, VOLUME 32, NUMBER 10, October 1984.

Richard H. Small's "Direct-Radiator Loudspeaker System Analysis." JOURNAL OF THE AUDIO ENGINEERING SOCIETY, VOLUME 20, June 1972.

A.N. Thiele's "Loudspeakers in Vented Boxes." JOURNAL OF THE AUDIO ENGINEERING SOCIETY, VOLUME 22, August 1961.

The former stablishes a set of primary specifications to be followed by manufacturers in describing loudspeaker components used in profesional audio and sound reinforcement system design. The other articles explain the theoretical bases of bass speakers and his parameters.

Note: All parameters and curves enclosed have been obtained by mounting the speaker in an approximately 1330 dm³ closed bin and geometrically designed to assure free air conditions. We consider this procedure to be equivalent to the use of the A.E.S. standard recommended baffles.

WARRANTY

D.A.S. could eventually, in order to improve the quality of our products, change the specifications enclosed without prior notice.

All D.A.S. professional sound products are guaranteed against defective workmanship for a period of five years.

In the event of a mulfunction, the product should be returned to any D.A.S. authorized service center or to the factory for appropiate inspection and repair.

D.A.S. Audio, s. a.
POLIGONO INDUSTRIAL FUENTE DEL JARRO - C/.ISLAS BALEARES, 24
46988 PATERNA (VALENCIA) SPAIN - TEL. (96) 1387843 - TELEX 61387 dsa-E - FAX (96) 1387806