YAMAHA

CV820WB Owner's Manual

■ CV820WB Control System

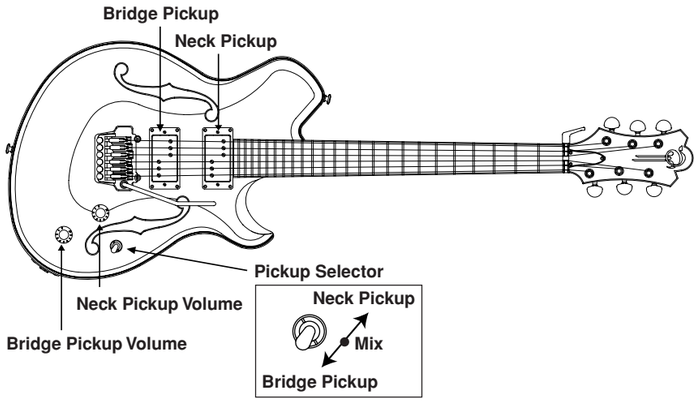

■ About Wes Borland's String Gauges

The CV820WB is the Wes Borland signature guitar model.The unique string gauges and tunings used by Wes Borland are given below.

Sting	Tuning	Gauge
1st	C#	.011
2nd	G#	.014
3rd	E	.022 (Wound)
4th	B	.032 (Wound)
5th	F#	.042 (Wound)
6th	C#	.052 (Wound)

The guitar is strung with .010–.046 gauge strings when shipped from the factory. In order to use the same gauge strings as Wes Borland you will need to change the locking blocks in the FC nut. The procedure given in the following section describes how to change the locking blocks.

FC Nut Part Names

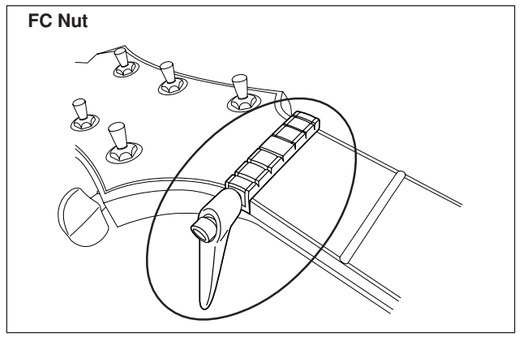

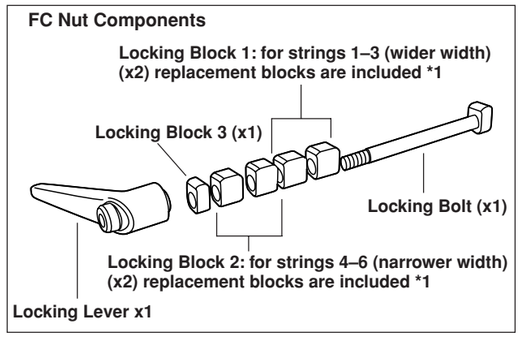

***1 : About locking blocks 1 and 2**

Included with the guitar is a set of locking blocks that fit the string gauges used by Wes Borland. Please note that the width of each locking block is different.

	For Normal Gauge Strings (.009–.042/.010–.046, etc.)	Supplied Replacement: For Wes Borland Gauge (.011–.052)
Locking Block 1 1st–3rd strings (wide)	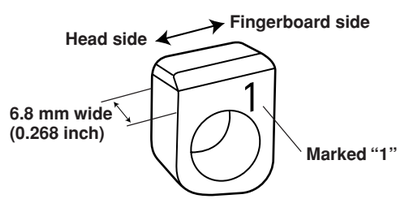	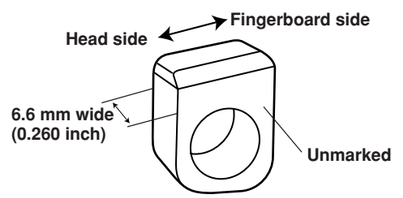
Locking Block 2 4th–6th strings (narrow)	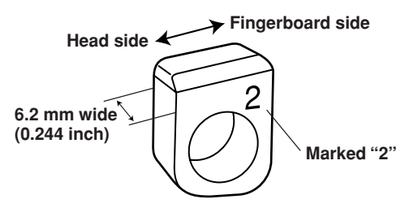	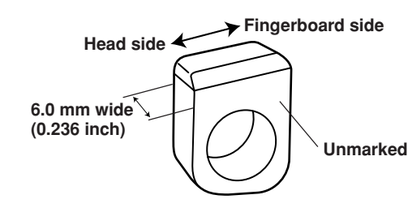

Changing the Locking Blocks

1 Remove the old strings. (Refer to the "Removing the old strings" section in the FC Tremolo System Manual.)

2 Loosen the FC nut locking lever, and remove the locking lever.

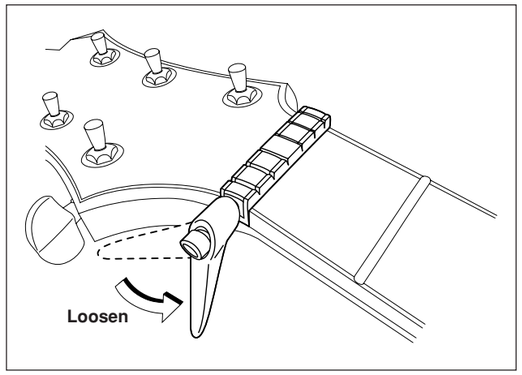

3 Remove the locking bolt.

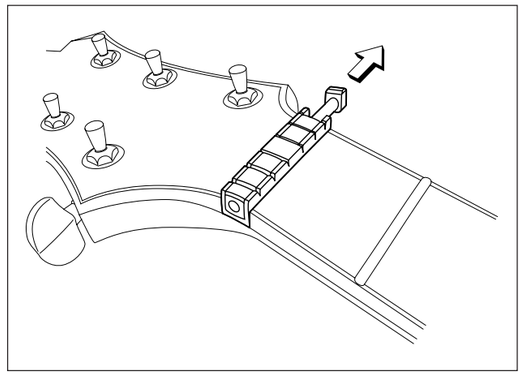

4 Replace the locking blocks 1 and 2.

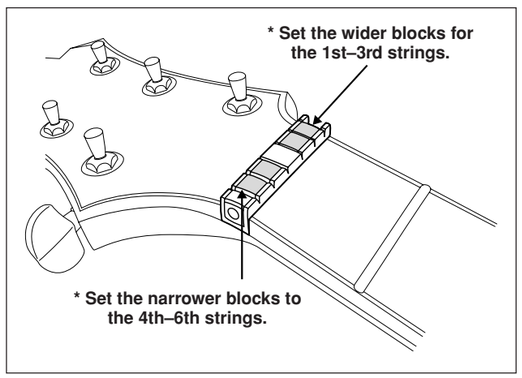

*** Store the set of locking blocks you removed from the guitar in a safe place for future use.**

5 Set the locking bolt.

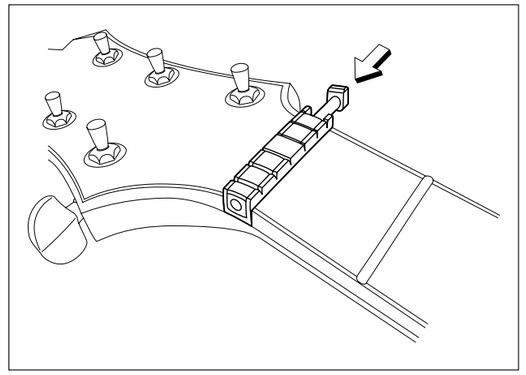

6 Re-attach the locking lever and tighten lightly.

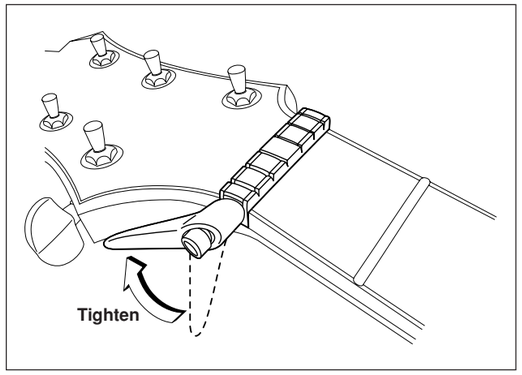

7 This completes locking block replacement. Install the new strings and tune the guitar. (Refer to the "Installing the new strings" section in the FC Tremolo System Manual.)