Antoine van Kampen
Corellistraat 193
5049 EH Tilburg
013-5701166

SCHEMATIC DIAGRAM

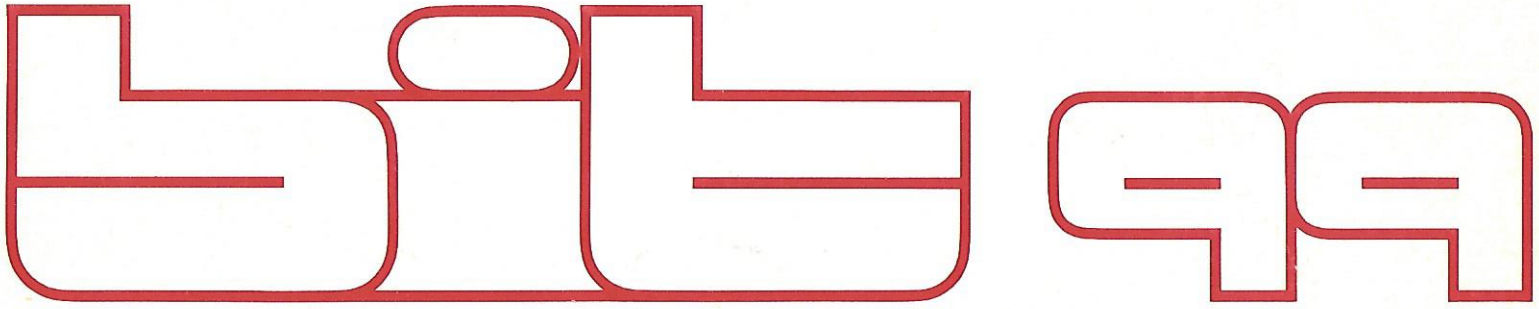



FEMALE CONNECTOR SYMBOL (es. J 2/1)



PLUG IN CONNECTOR SYMBOL



WIRE SOLDERING POINT



TEST POINT (T P...)

CONNECTING POINT (ON p.c.b.)



METALLIC FILM RESISTOR 1%

ALL resistors 1/4w unless otherwise indicated

ALL tabswitches shown in OFF position

ALL keyswitches shown in OFF position

See part list for component part numbers

BIT RESERVES THE RIGHT TO CHANGE
SPECIFICATIONS AND DESIGNS, WITHOUT
NOTICE AND LIABILITY.

SCHEMATIC DIAGRAM

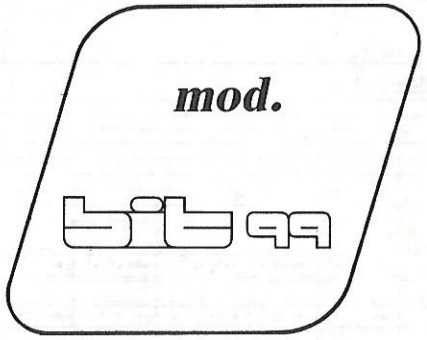

BLOCK DIAGRAM

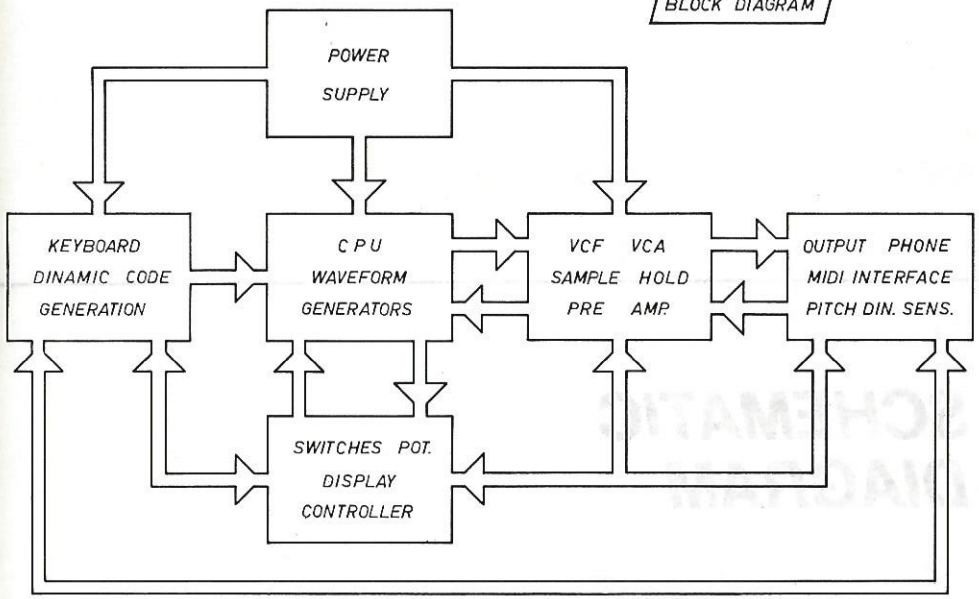

KEY SWITCHES BOARD

P-1123

SWITCHES BOARD

P-1121

P-1102

DISPLAY'S BOARD

QUESTO DISEGNO È PROPRIETÀ PRIVATA E NON PUÒ ESSERE COPIATO RIPRODOTTO MOSTRATO A TERZI SENZA NOSTRA APPROVAZIONE SCRITTA

bit	MODEL	BIT 99		
DRAWN BY	21/5/85		REVISION	
DESIGNED BY			DATE	
1				

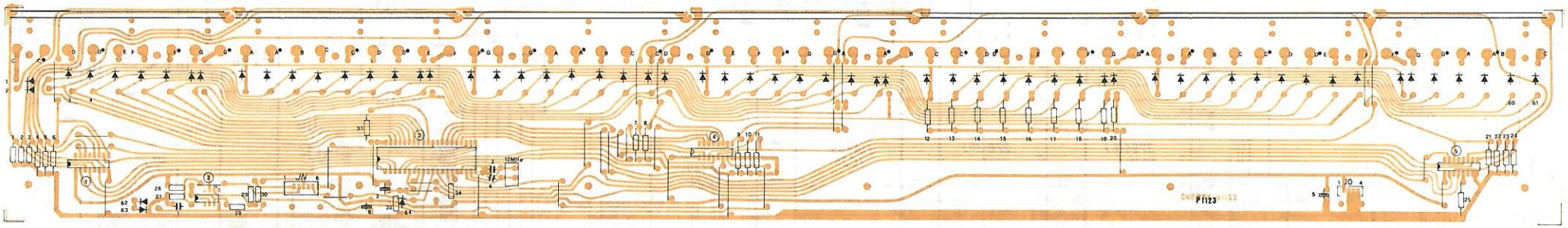

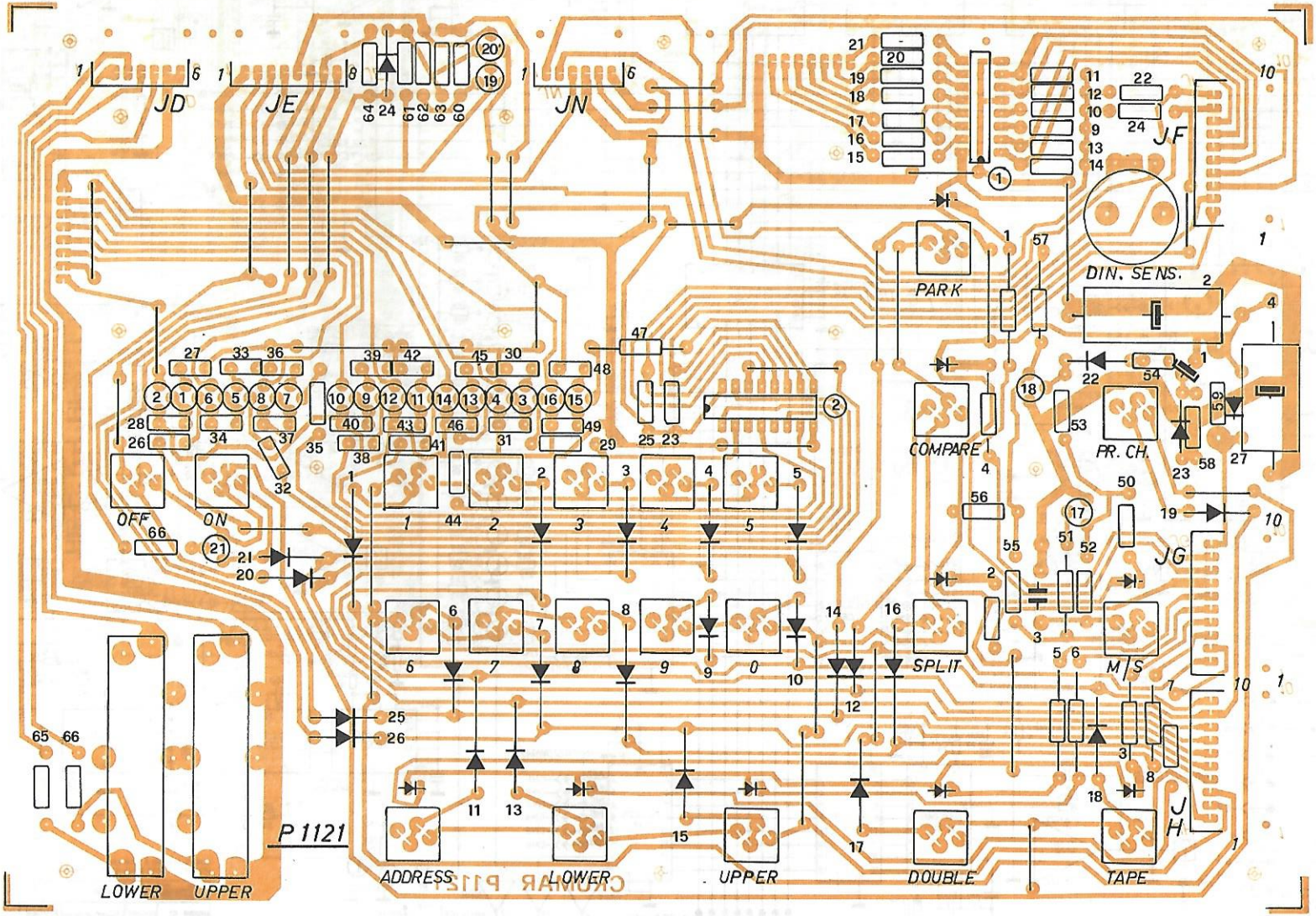

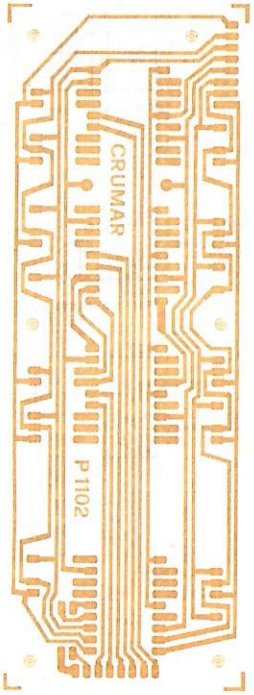

QUESTO DISEGNO È PROPRIETÀ PRIVATA E NON PUÒ ESSERE COPIATO RIPRODOTTO MOSTRATO A TERZI SENZA NOSTRA APPROVAZIONE SCRITTA

bit		MODEL :	BIT 99	
DRAWN BY	21/6/85		REVISION	
DESIGNED BY			DATE	

1A

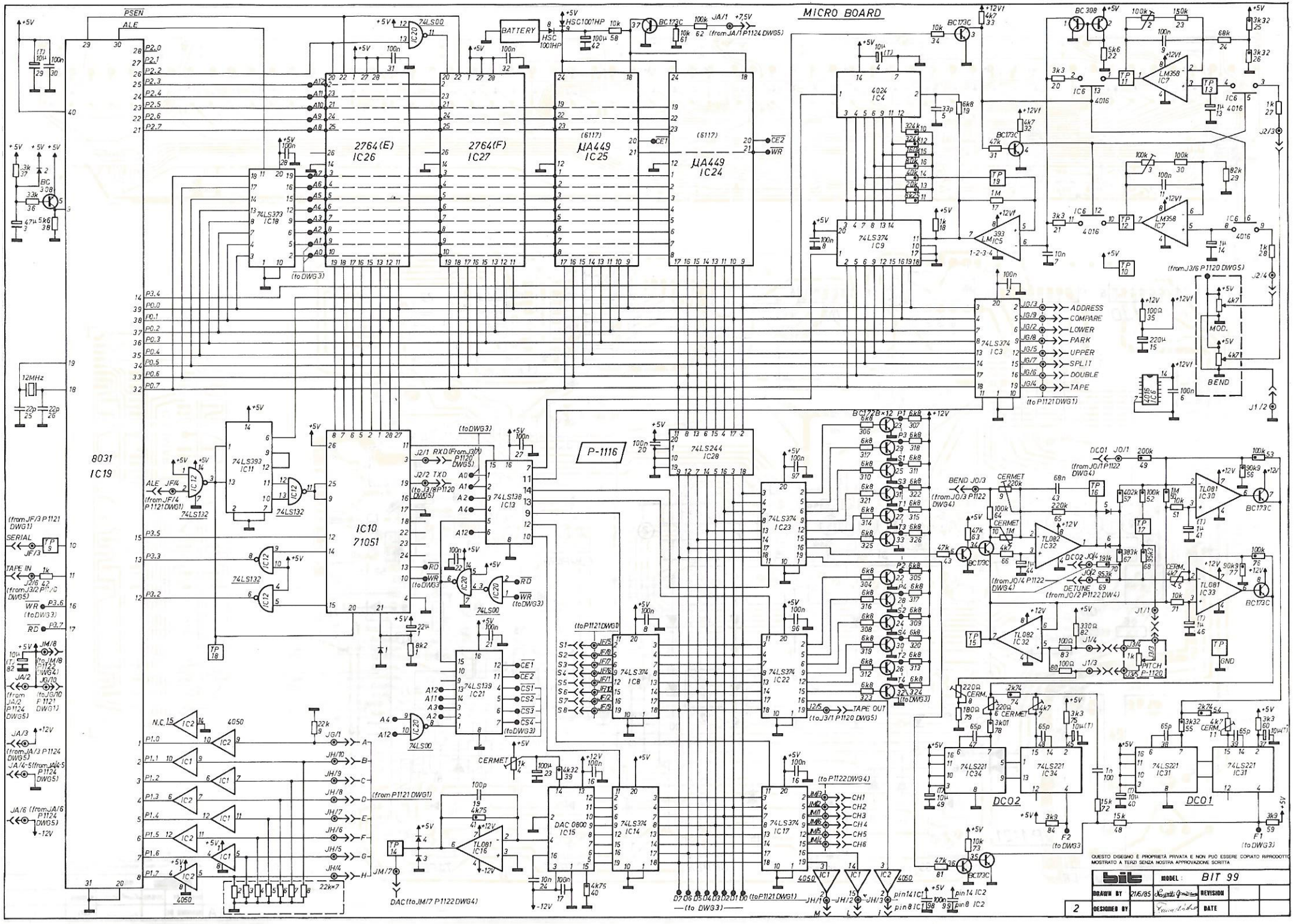
MICRO BOARD
PSEN
ALE
8031
IC19
IC10
71051
2764(E)
IC26
2764(F)
IC27
μA449
IC25
μA449
IC24
74LS373
IC18
74LS393
IC11
74LS138
IC13
74LS139
IC21
74LS374
IC8
74LS374
IC9
74LS374
IC3
74LS374
IC23
74LS374
IC22
74LS374
IC17
74LS374
IC14
74LS374
IC15
74LS244
IC28
4024
IC4
LM358
IC7
LM358
IC7
LM393
IC5
TL082
IC32
TL081
IC30
TL081
IC33
TL081
IC16
DAC 0800
IC15
74LS221
IC34
74LS221
IC31
DC02
DC01
P-1116
BATTERY
HSC1001HP
ADDRESS
COMPARE
LOWER
PARK
UPPER
SPLIT
DOUBLE
TAPE
MOD.
BEND
PITCH
DETUNE
TAPE OUT
SERIAL
TAPE IN
12MHz
CERMET
GND
(from JA/1 P1124 DWG5)
(to DWG3)
(to P1121 DWG1)
(from P1121 DWG1)
(to P1122 DWG4)
(from J3/6 P1120 DWG5)
(from JF/3 P1121 DWG1)
(from JF/4 P1121 DWG1)
(from JA/3 P1124 DWG5)
(from JA/4-5 P1124 DWG5)
(from JA/6 P1124 DWG5)
(from JA/2 P1124 DWG5)
(from JA/3 P1124 DWG5)
(from JA/4 P1122 DWG4)
(from JO/1 P1122 DWG4)
(from JO/2 P1122 DW4)
(from JO/3 P1122 DWG4)
(to J3/1 P1120 DWG5)
(to P1122 DWG4)
DAC (to JM/7 P1122 DWG4)
(to P1121 DWG1)
(to DWG3)
QUESTO DISEGNO È PROPRIETÀ PRIVATA E NON PUÒ ESSERE COPIATO RIPRODOTTO MOSTRATO A TERZI SENZA NOSTRA APPROVAZIONE SCRITTA
bit
MODEL: BIT 99
DRAWN BY
21/6/85
REVISION
DESIGNED BY
DATE
2

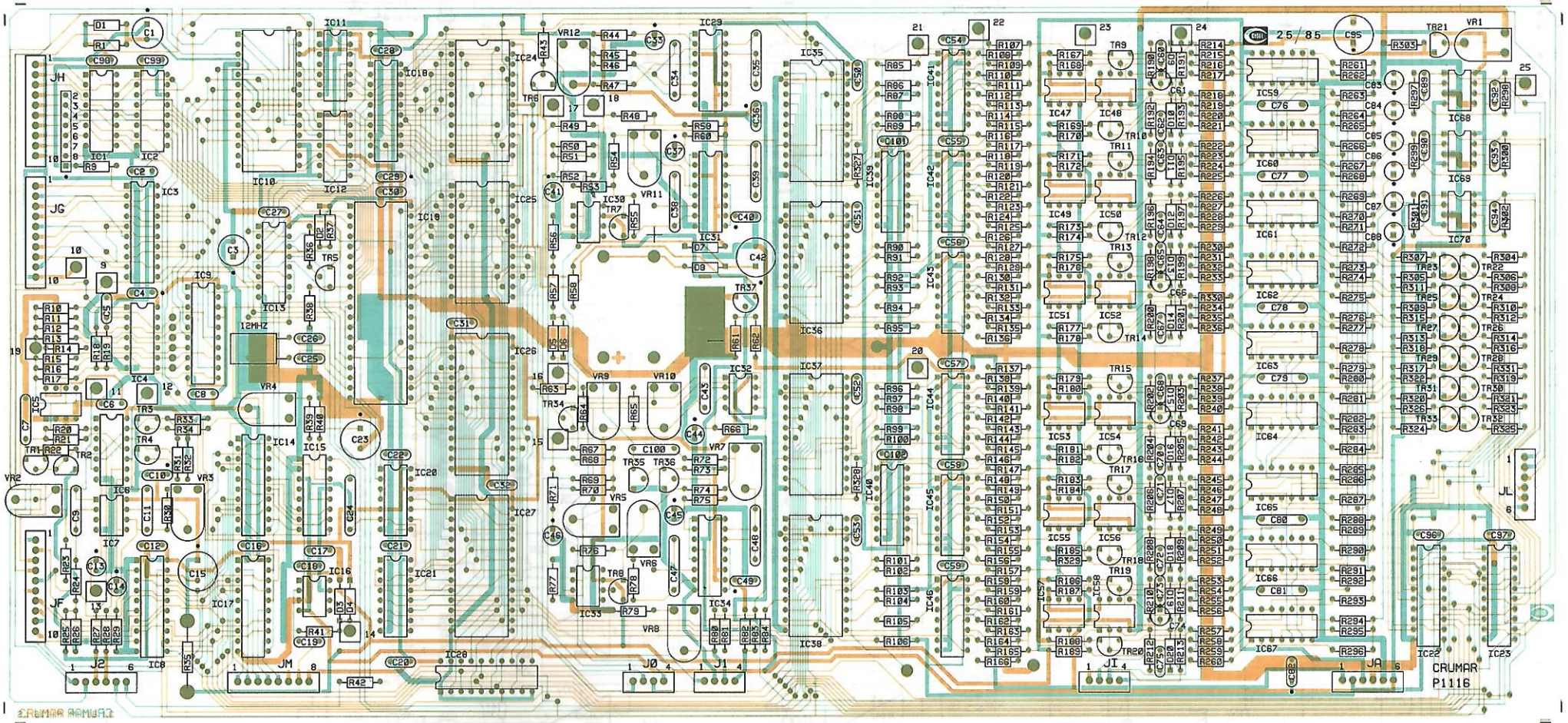

QUESTO DISEGNO È PROPRIETÀ PRIVATA E NON PUO ESSERE COPIATO RIPRODOTTO MOSTRATO A TERZI SENZA NOSTRA APPROVAZIONE SCRITTA

bit		MODEL:	BIT 99		
	DRAWN BY	21/6/85	REVISION		
2A	DESIGNED BY		DATE		

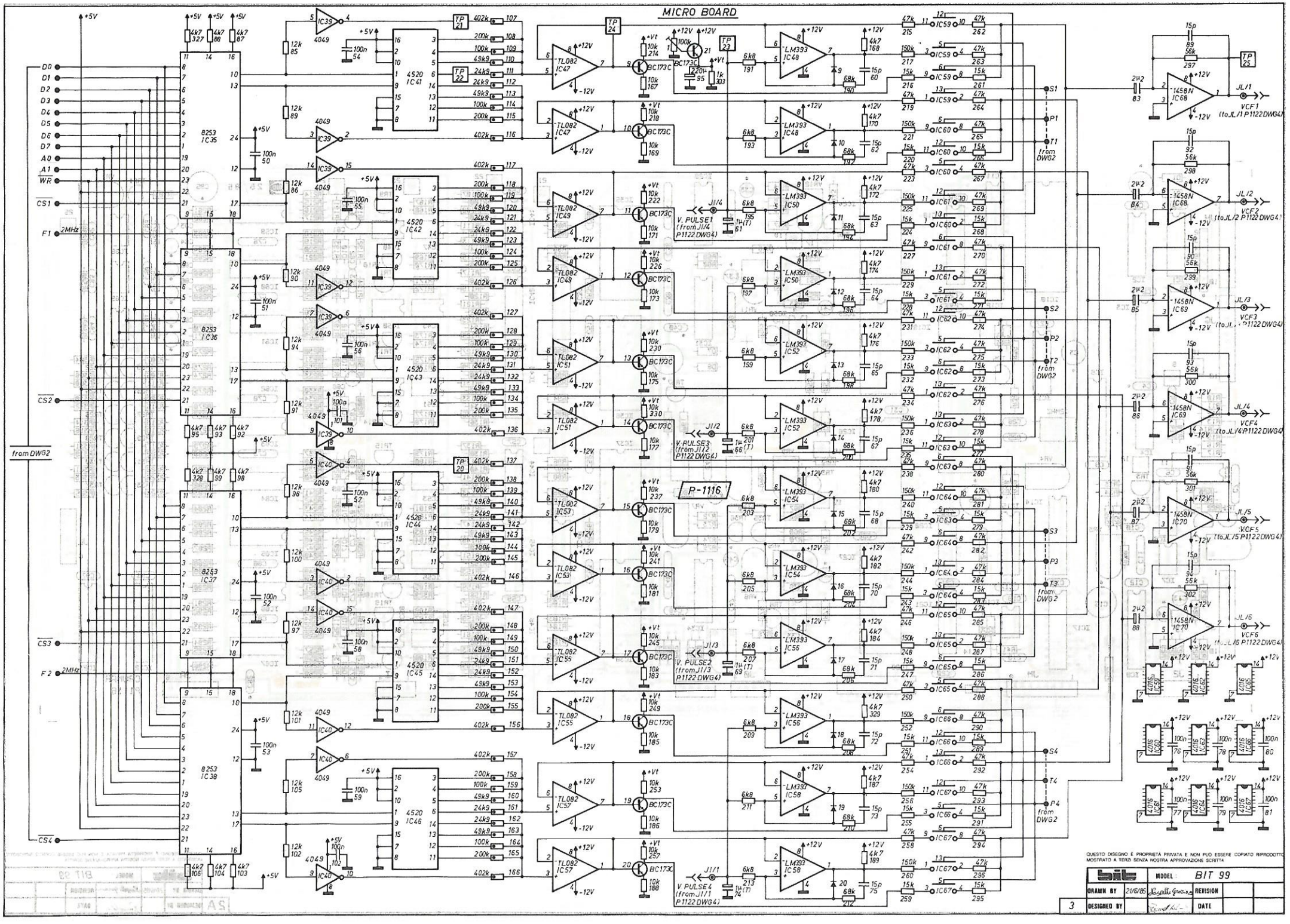
MICRO BOARD
P-1116
D0
D1
D2
D3
D4
D5
D6
D7
A0
A1
WR
CS1
CS2
CS3
CS4
F1 2MHz
F2 2MHz
from DWG2
8253 IC35
8253 IC36
8253 IC37
8253 IC38
4520 IC41
4520 IC42
4520 IC43
4520 IC44
4520 IC45
4520 IC46
TL082 IC47
TL082 IC49
TL082 IC51
TL082 IC53
TL082 IC55
TL082 IC57
LM393 IC48
LM393 IC50
LM393 IC52
LM393 IC54
LM393 IC56
LM393 IC58
1458N IC68
1458N IC69
1458N IC70
4049 IC39
4049 IC40
BC173C
V. PULSE1 (from J1/4 P1122.DWG4)
V. PULSE2 (from J1/3 P1122.DWG4)
V. PULSE3 (from J1/2 P1122.DWG4)
V. PULSE4 (from J1/1 P1122.DWG4)
VCF1 (to JL/1 P1122.DWG4)
VCF2 (to JL/2 P1122.DWG4)
VCF3 (to JL/3 P1122.DWG4)
VCF4 (to JL/4 P1122.DWG4)
VCF5 (to JL/5 P1122.DWG4)
VCF6 (to JL/6 P1122.DWG4)
S1
S2
S3
S4
P1
P2
P3
P4
T1 from DWG2
T2 from DWG2
T3 from DWG2
T4 from DWG2
QUESTO DISEGNO È PROPRIETÀ PRIVATA E NON PUÒ ESSERE COPIATO RIPRODOTTO MOSTRATO A TERZI SENZA NOSTRA APPROVAZIONE SCRITTA
MODEL BIT 99
DRAWN BY 21/6/85
DESIGNED BY
REVISION
DATE
3

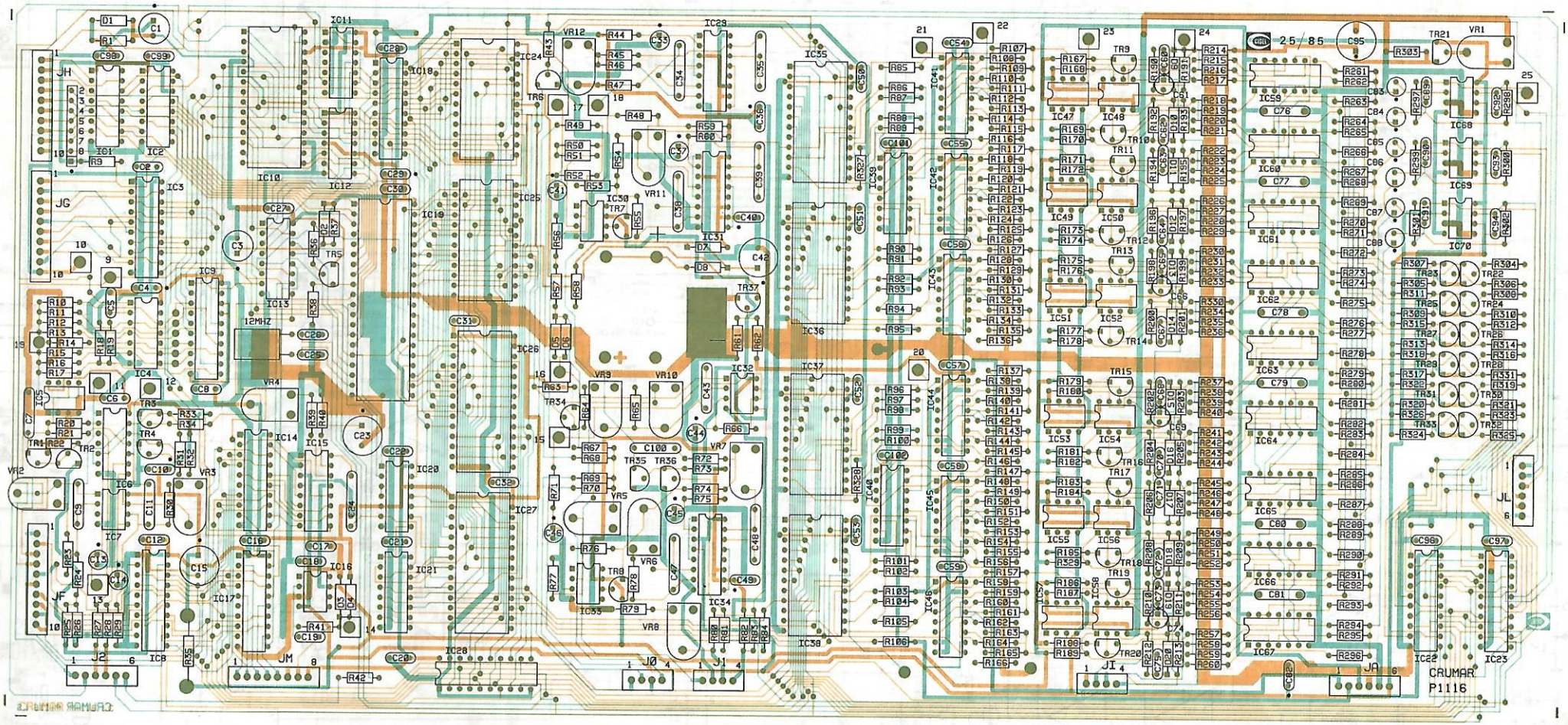

QUESTO DISEGNO È PROPRIETÀ PRIVATA E NON PUÒ ESSERE COPIATO RIPRODOTTO
MOSTRATO A TERZI SENZA NOSTRA APPROVAZIONE SCRITTA

bit		MODEL :	BIT 99		
3A	DRAWN BY	21/6/85		REVISION	
	DESIGNED BY			DATE	

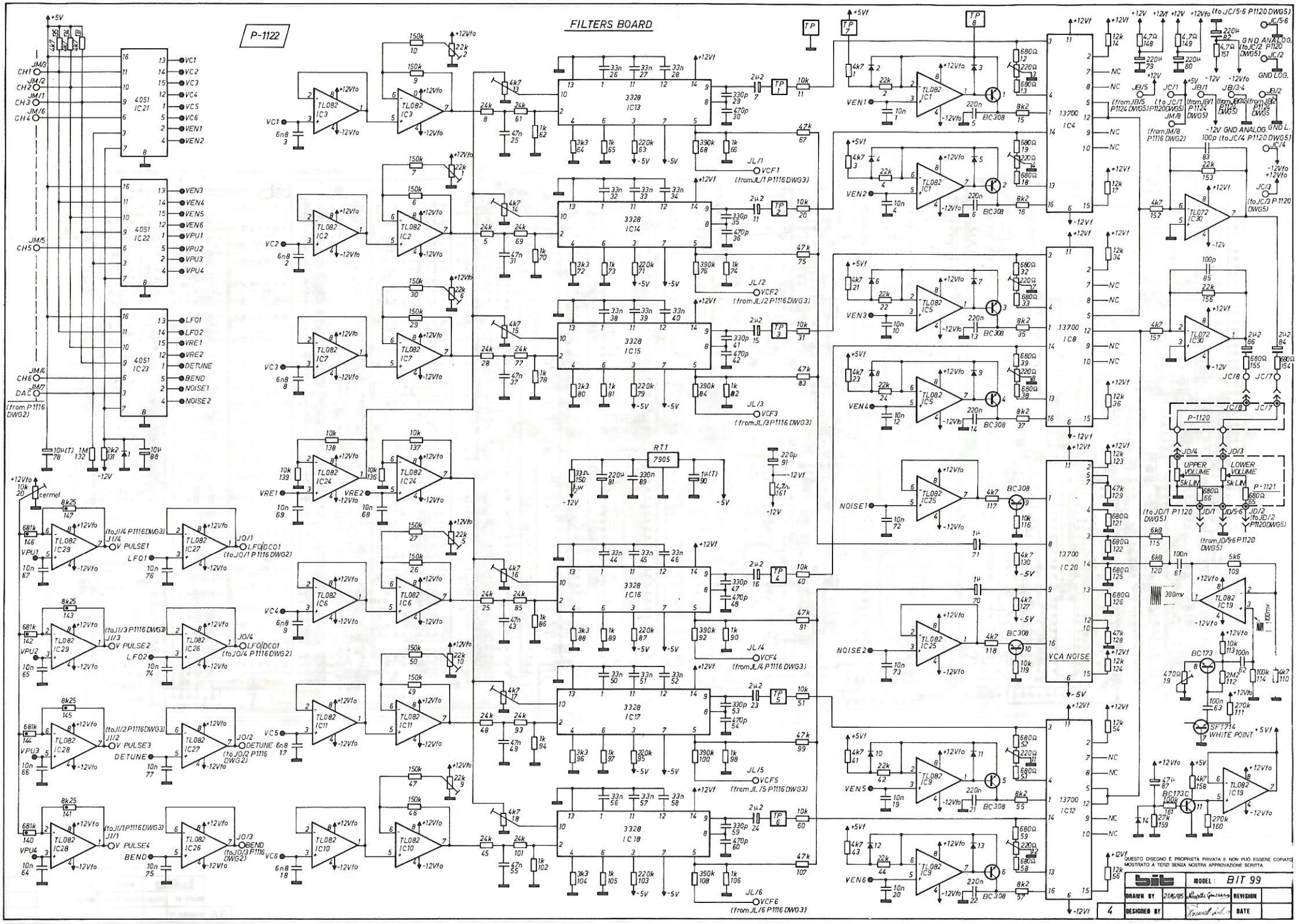
P-1122
FILTERS BOARD
4051 IC21
4051 IC22
4051 IC23
3328 IC13
3328 IC14
3328 IC15
3328 IC16
3328 IC17
3328 IC18
13700 IC4
13700 IC8
13700 IC20
13700 IC12
VCA NOISE
RT1 7905
UPPER VOLUME
LOWER VOLUME
P-1121
P-1120
SFT714 WHITE POINT
GND ANALOG.
GND LOG.
GND L.
-12V GND ANALOG.
(from P1116 DWG2)
(from JL/1 P1116 DWG3)
(from JL/2 P1116 DWG3)
(from JL/3 P1116 DWG3)
(from JL/4 P1116 DWG3)
(from JL/5 P1116 DWG3)
(from JL/6 P1116 DWG3)
(to JC/5-6 P1120 DWG5)
(to JC/2 P1120 DWG5)
(to JC/3 P1120 DWG5)
(to JC/4 P1120 DWG5)
(to JD/1 P1120 DWG5)
(to JD/2 P1120 DWG5)
(from JD/5-6 P1120 DWG5)
(from JB/5 P1124 DWG5)
(from JB/1 P1124 DWG5)
(from JB/2 P1124 DWG5)
(from JM/8 P1116 DWG2)
(to JI/4 P1116 DWG3)
(to JI/3 P1116 DWG3)
(to JI/2 P1116 DWG3)
(to JI/1 P1116 DWG3)
(to JO/1 P1116 DWG2)
(to JO/4 P1116 DWG2)
(to JO/2 P1116 DWG2)
(to JO/3 P1116 DWG2)
300mv
100mv
QUESTO DISEGNO È PROPRIETÀ PRIVATA E NON PUÒ ESSERE COPIATO MOSTRATO A TERZI SENZA NOSTRA APPROVAZIONE SCRITTA.
bit
MODEL: BIT 99
DRAWN BY 21/6/85
REVISION
4
DESIGNED BY
DATE

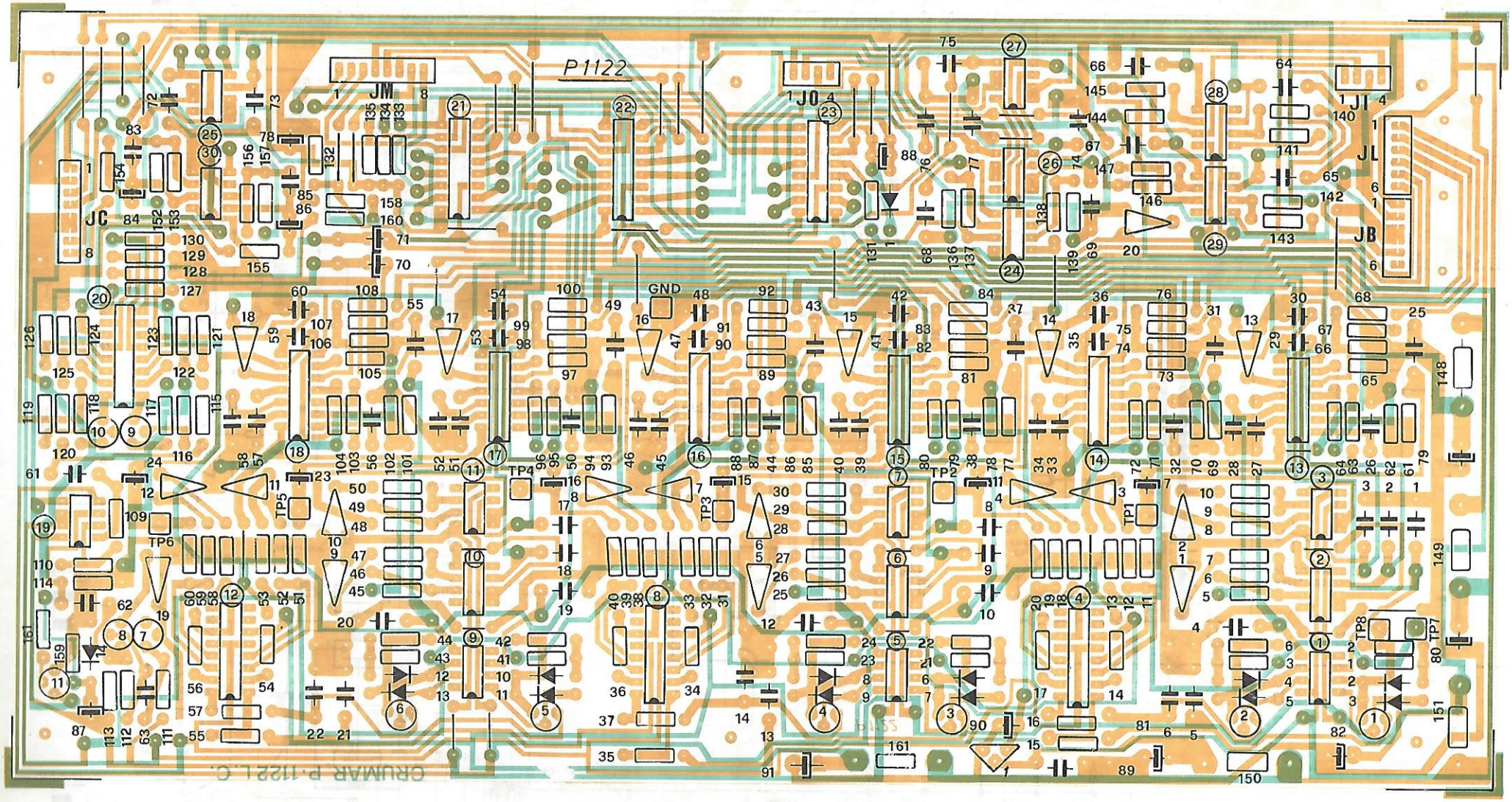

QUESTO DISEGNO È PROPRIETÀ PRIVATA E NON PUÒ ESSERE COPIATO RIPRODOTTO MOSTRATO A TERZI SENZA NOSTRA APPROVAZIONE SCRITTA

bit	MODEL :	BIT 99			
4A	DRAWN BY	21/6/85	REVISION		
	DESIGNED BY		DATE		

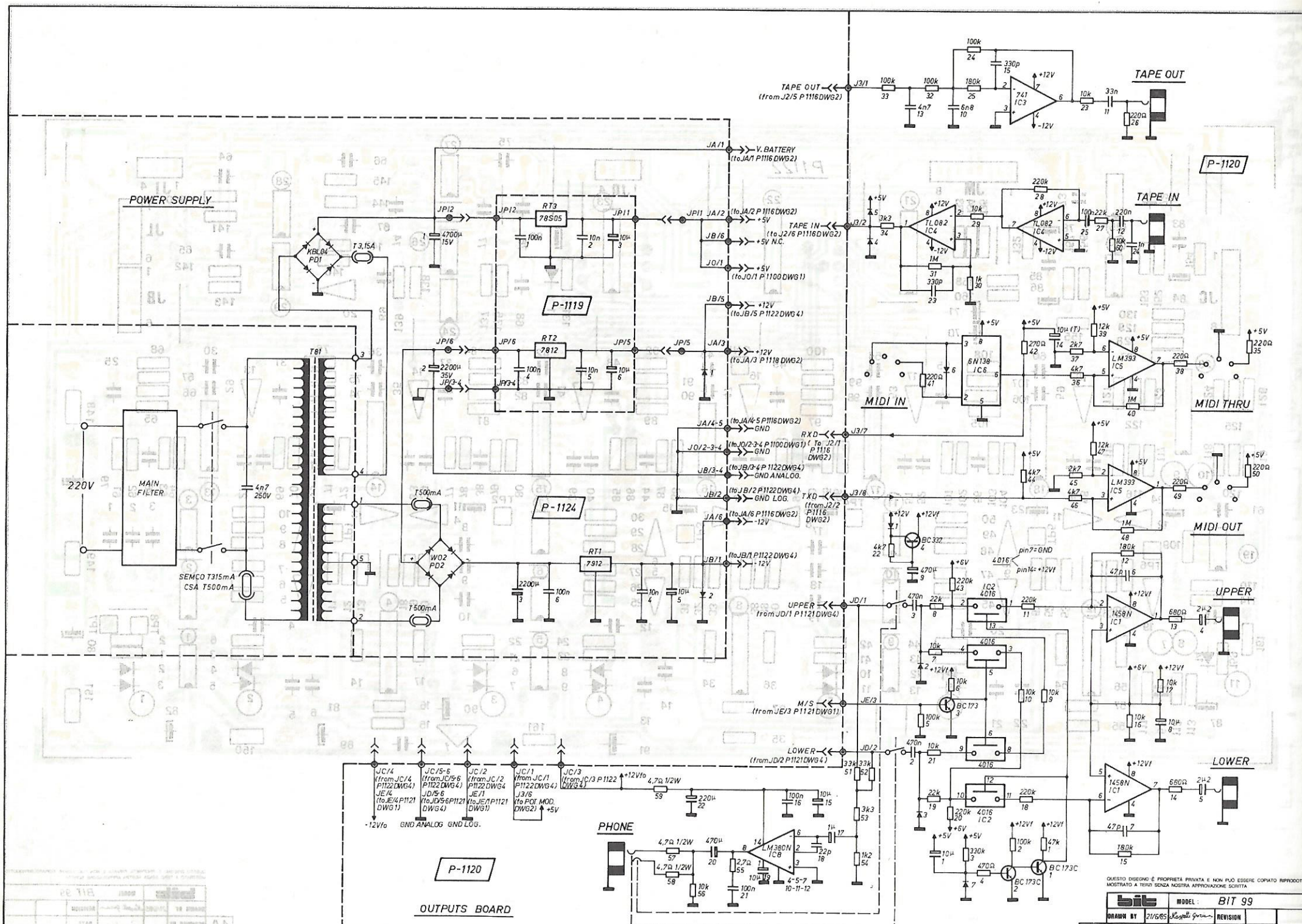

QUESTO DISEGNO È PROPRIETÀ PRIVATA E NON PUÒ ESSERE COPIATO RIPRODOTTO MOSTRATO A TERZI SENZA NOSTRA APPROVAZIONE SCRITTA

bit		MODEL :	BIT 99		
DRAWN BY	21/6/85	REVISION			
5 DESIGNED BY		DATE			

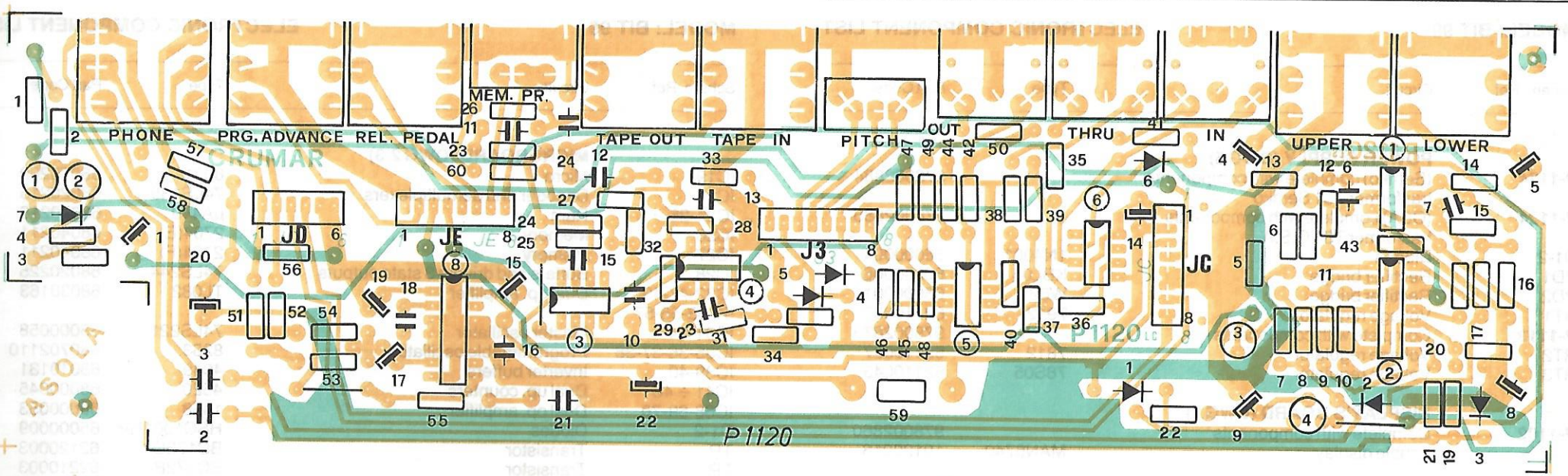

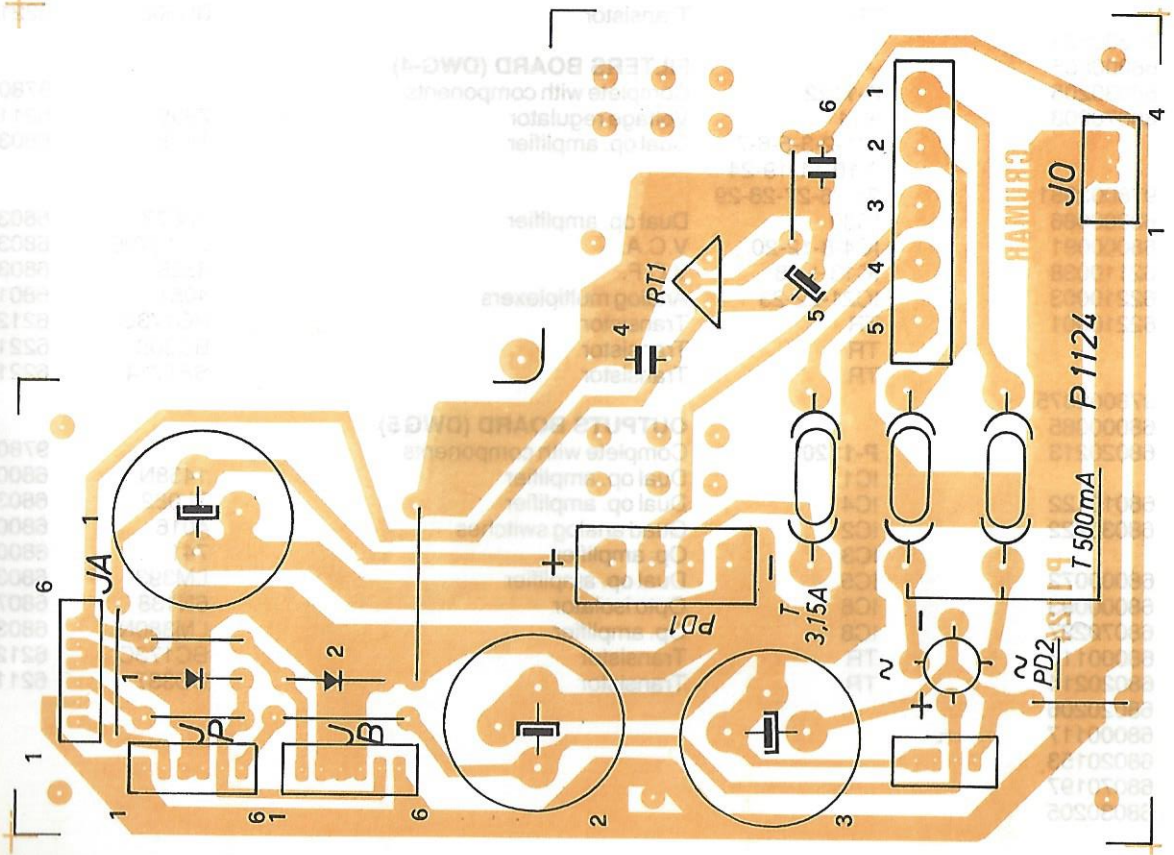

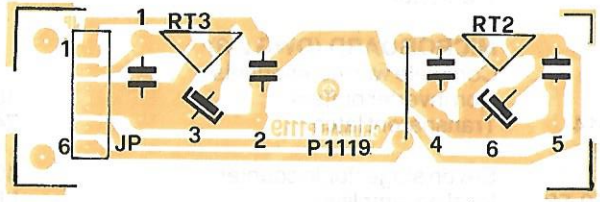

QUESTO DISEGNO È PROPRIETÀ PRIVATA E NON PUÒ ESSERE COPIATO RIPRODOTTO MOSTRATO A TERZI SENZA NOSTRA APPROVAZIONE SCRITTA

bit	MODEL : BIT 99		
DRAWN BY 21/6/85		REVISION	
DESIGNED BY		DATE	

5A

MODEL: BIT 99 **ELECTRONIC COMPONENT LIST**

Schem. Ref.	Circuit	Type	Part Code
	POWER SUPPLY (DWG 5)		
P-1124	(Semko) complete with components trasformer T81 Semko		978002884
P-1124	(CSA) complete with components trasformer T81 C.S.A.		978002885
D1-2	Diodes	1N4001	66000004
PD1	Rectifier bridge	KBL04	66000006
PD2	Rectifier bridge	W02	66000001
RT1	Voltage regulator	7912	62110037
P-1119	Complete with components		978002878
RT2	Voltage regulator	7812	62110027
RT3	Voltage regulator	78S05	62110043
	DISPLAY'S BOARD (DWG 1)		
P-1102	Complete with components double display	MAN6740	978002860 10120016
	KEY SWITCHES BOARD (DWG 1)		
P-1123	Complete with components		978002883
IC1-4-5	Non inverter buffer	4050	68000085
IC2	Op amplifier	TL081	68030205
IC3	Micro	8051	68070208
	SWITCHES BOARD (DWG 1)		
P-1121	Complete with components		978002881
IC1	Decoder	4511	68000086
IC2	Decoder	4028	68000091
TR	Transistor	BC337	62110038
TR	Transistor	BC172	62210003
TR	Transistor	BC308	62210001
	MICROBOARD (DWG 2-3)		
P-1116	Complete with components		978002875
IC1-2	Non inverter buffers	4050	68000085
IC3-8-9-14-17-22-23	Transparent latch	74LS374	68020213
IC4	Seven stage ripple counter	4024	68010122
IC5-48-50-52 54-56-58	Dual op. amplifier	LM393	68030222
IC6-59 ÷ 67	Quad analog. switches	4016	68000072
IC7	Dual op. amplifier	LM358	68000093
IC10	Programmable communication interface	8251	68070227
IC11	Transparent latch	74LS393	68000115
IC18	Transparent latch	74LS373	68020214
IC12	Positive "nand" gate	74LS132	68020206
IC20	Positive "nand" gate	74LS00	68000117
IC13	Decoders and demultiplexers	74LS138	68020153
IC15	Digital analog. converter	DAC0800	68070197
IC16-30-33	Op. amplifier	TL081	68030205

MODEL: BIT 99 **ELECTRONIC COMPONENT LIST**

Schem. Ref.	Circuit	Type	Part Code
	MICROBOARD (DWG 2-3)		
IC19	Micro	8031	68070209
IC21	Decoder and demultiplexers	74LS139	68020215
IC24-25	Ram	µA449	68070216
IC26	Memory	2764(E)	68040211
IC27	Memory	2764(F)	68040211
IC28	Buffers and drivers 3 state outputs	74LS244	68020225
IC32-47-49 51-53-55-57	Dual op. amplifier	TL082	68030163
IC31-34	Master oscillator	74LS221	68000058
IC35-36-37-38	Programmable oscillator	8253	680702110
IC39-40	Inverter buffers	4049	68010131
IC41 ÷ 46	Dual up. counters	4520	68000045
IC68-69-70	Dual op. amplifier	1458	68000053
D1-2	Diodes	HSC1001HP	65000009
TR	Transistor	BC173C	62120003
TR	Transistor	BC172B	62210003
TR	Transistor	BC308	62210001
	FILTERS BOARD (DWG-4)		
P-1122	Complete with components		978002882
RT1	Voltage regulator	7905	62110033
IC1-2-3-5-6-7 9-10-11-19-24 25-26-27-28-29	Dual op. amplifier	TL082	68030163
IC30	Dual op. amplifier	TL072	68030140
IC4-8-12-20	V.C.A.	LM13700	68030219
IC13 ÷ 18	V.C.F.	3328	68030223
IC21-22-23	Analog multiplexers	4051	68010154
TR	Transistor	BC173C	62120003
TR	Transistor	BC308	62210001
TR	Transistor	SFT714	62210002
	OUTPUTS BOARD (DWG 5)		
P-1120	Complete with components		978002880
IC1	Dual op. amplifier	1458N	68000053
IC4	Dual op. amplifier	TL082	68030163
IC2	Quad analog switches	4016	68000072
IC3	Op. amplifier	741	68000059
IC5	Dual op. amplifier	LM393	68030222
IC6	Opto isolator	6N138	68070220
IC8	Op. amplifier	LM380N	68030203
TR	Transistor	BC173C	62120003
TR	Transistor	BC337	62110038