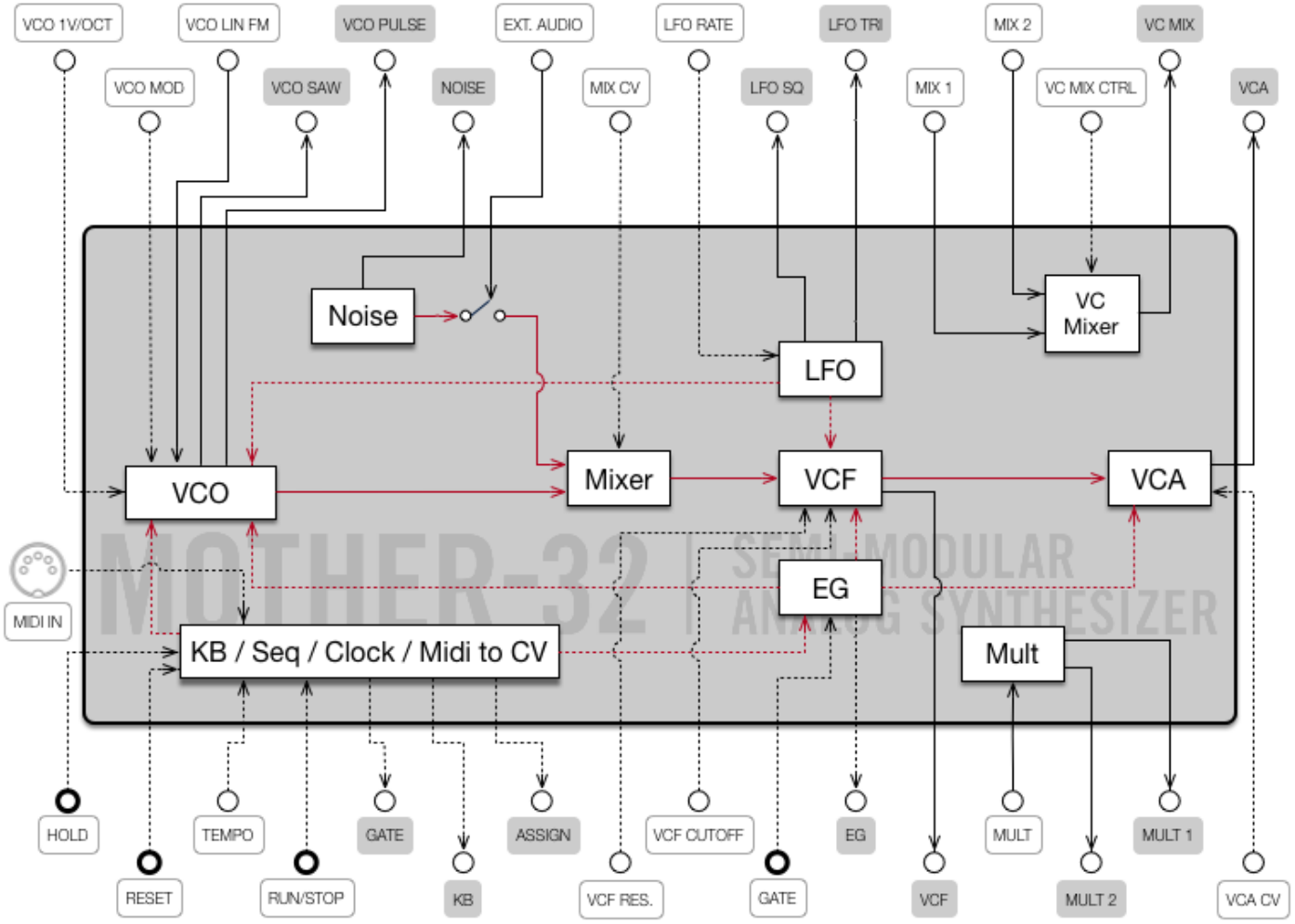
VCO 1V/OCT
VCO LIN FM
VCO PULSE
EXT. AUDIO
LFO RATE
LFO TRI
MIX 2
VC MIX
VCO MOD
VCO SAW
NOISE
MIX CV
LFO SQ
MIX 1
VC MIX CTRL
VCA
Noise
VC Mixer
LFO
VCO
Mixer
VCF
VCA
MOTHER-32
SEMI-MODULAR ANALOG SYNTHESIZER
EG
MIDI IN
KB / Seq / Clock / Midi to CV
Mult
HOLD
TEMPO
GATE
ASSIGN
VCF CUTOFF
EG
MULT
MULT 1
RESET
RUN/STOP
KB
VCF RES.
GATE
VCF
MULT 2
VCA CV