YAMAHA

CP80M / CP70M

ELECTRIC GRAND

OWNER'S MANUAL

ELECTRIC GRAND CP80M/CP70M

Thank you for purchasing the Yamaha Electric Grand. The CP80M and CP70M are the first electric grand pianos to feature the Musical Instrument Digital Interface; MIDI, enabling you to control any MIDI-equipped synthesizer from the Electric Grand's true piano-action keyboard. This means that you can add exciting synthesizer sounds to the dynamic and natural sound of the Electric Grand.

In addition, the Electric Grand comes equipped with a graphic equalizer to enhance the acoustic sound and provide tonal variation. With its tremolo system, external effect connector terminals, balanced and unbalanced outputs, MIDI OUT connector, etc., you will find that the CP80M/70M will be a great asset to your stage or studio.

This manual describes the proper operation and care of the Electric Grand. To insure long and trouble-free operation, please read through this manual before setting up the piano.

CONTENTS

■CAUTIONS 1
■ASSEMBLY 2
■OVERVIEW 4
■CONTROL PANEL 5
■CONNECTION 6
■MIDI SYSTEMS WITH THE CP80M·CP70M . 7
■SPECIFICATIONS 9
■BLOCK DIAGRAM 10

CAUTIONS

❶ Do not stand the separated units on end as they may fall over. This could be dangerous.

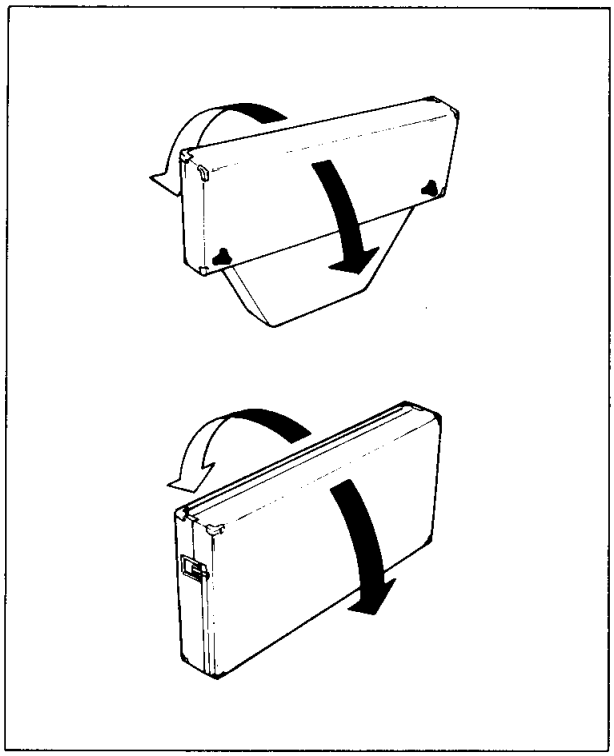

❷ Function of the damper pedal may be impaired if the piano is moved with it attached. Therefore, install the pedal only after the piano has been assembled and moved to the position where it will be used.

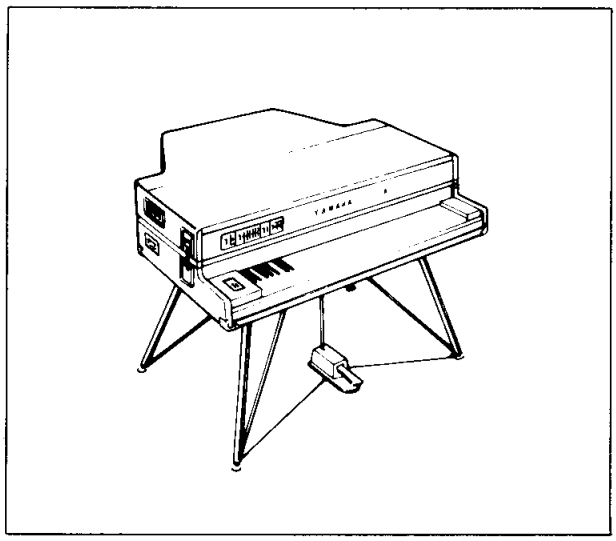

❸ The accompanying AC adaptor is especially designed for this instrument and is not interchangeable with other AC adaptors on the market. Use of other adaptors may result in damage to the internal Electrical circuit. Therefore, use only the AC adaptor designed for this instrument. If this instrument is used in another country, a special AC adaptor designed for the local voltage may be necessary.

❹ This instrument is designed to operate with 16-20 volts DC. Never plug it directly into an AC outlet.

❺ Be careful not to catch your fingers between the upper and lower units.

ASSEMBLY

❶ Separating Lower Unit & Case

Release the hooks (A) on both sides, lift the case upward and release it from the hinges. (Pull out the 2 phone jack cords and an AC adapter from the retaining straps in the rear of the keyboard section).

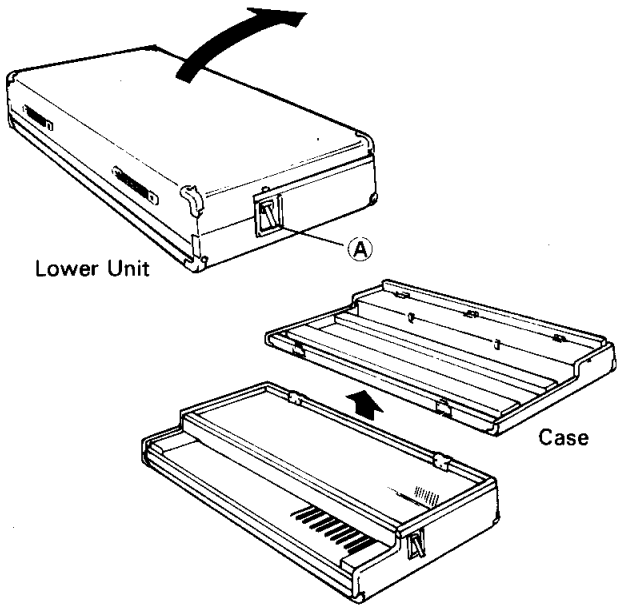

❷ Removing Items From Lower Case

ⓐ Pedal ⓑ Pedal Rod
ⓒ Leg Stays (2 with screws, 2 without)
ⓓ 4 Legs ⓔ AC Adaptor

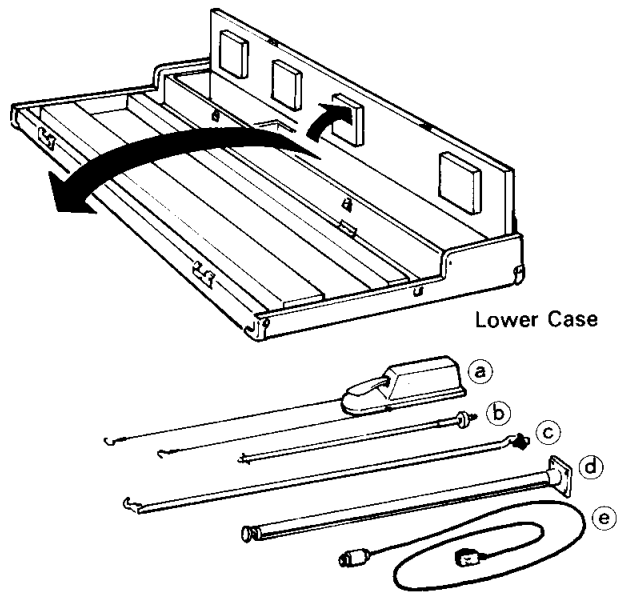

❸ Attaching The Legs

Set the lower unit upright with the keyboard facing upward. Insert the legs in "LOCK" direction (B), slide them into the grooves and then turn them in "LOCK" direction (C) to secure them firmly in place.

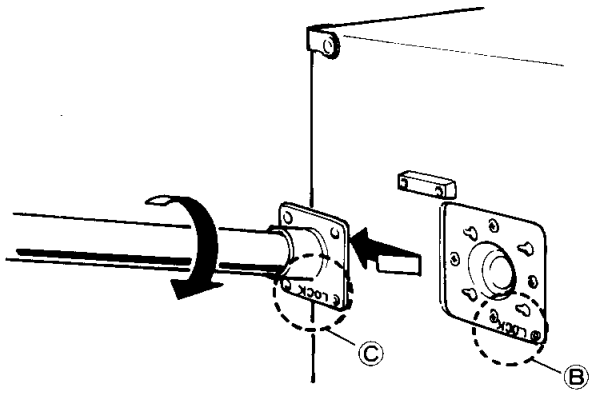

❹ Installing Leg Stays

Place the stays with screws over those without Screws and tighten them temporarily. Attach the hooks and tighten the rings (D). Lastly, tighten the stay screws and set the lower unit upright.

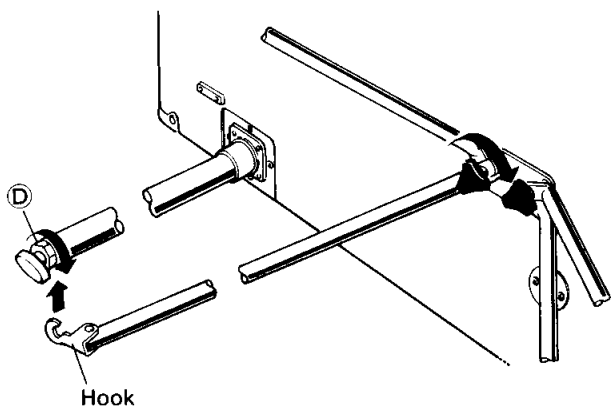

❺ Separating Upper Unit From Case.

Stand the upper unit upright with the YAMAHA identification plate face down, and loosen the screws (E). Swing the case up and remove it from the hinges.

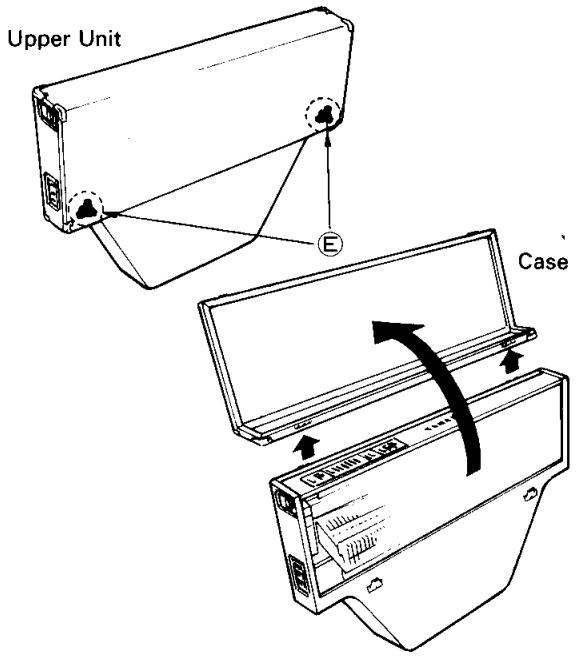

❻ Installing Upper Unit

Lift the upper unit vertically and slide it into the hinges. Be careful not to catch your fingers between the two units.

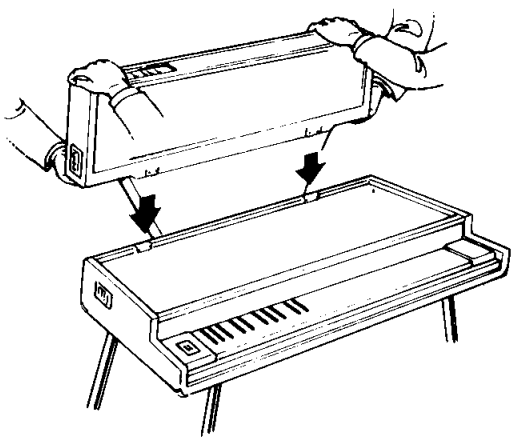

❼ Attaching Upper Unit

Support the upper unit with both hands and swing it down to the keyboard. Securely connect both units with the hooks at both ends. Be careful not to catch your fingers between the two units.

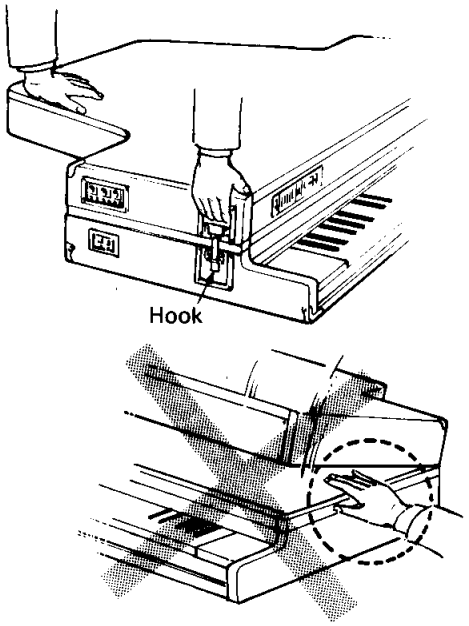

❽ Installing & Adjusting The Pedal

As shown, insert the rod into the pedal and turn it 90° in either direction to secure it. Then align the rod with the lower unit pedal hole and secure it with the ring (F).
Lastly, connect the wires to the legs.

Adjustment: Depress the pedal a little at a time while turning the adjust ring until there is no more play.

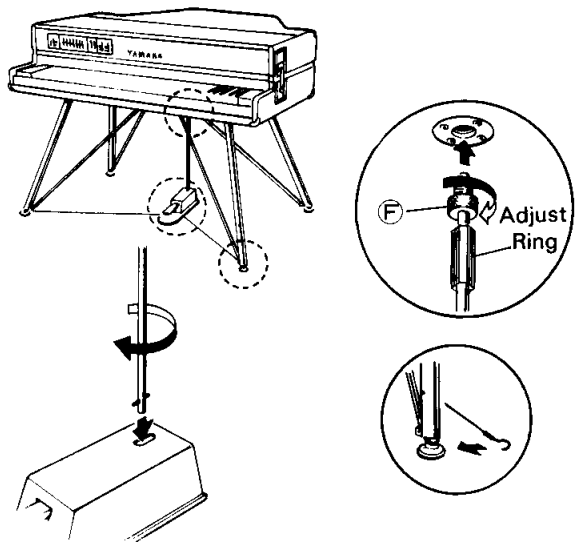

OVERVIEW

CONNECTING
TERMINALS

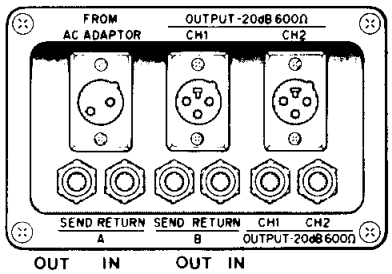

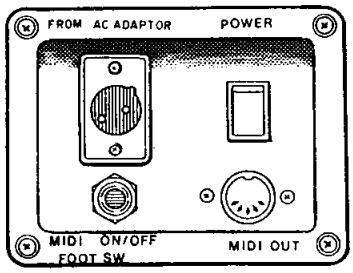

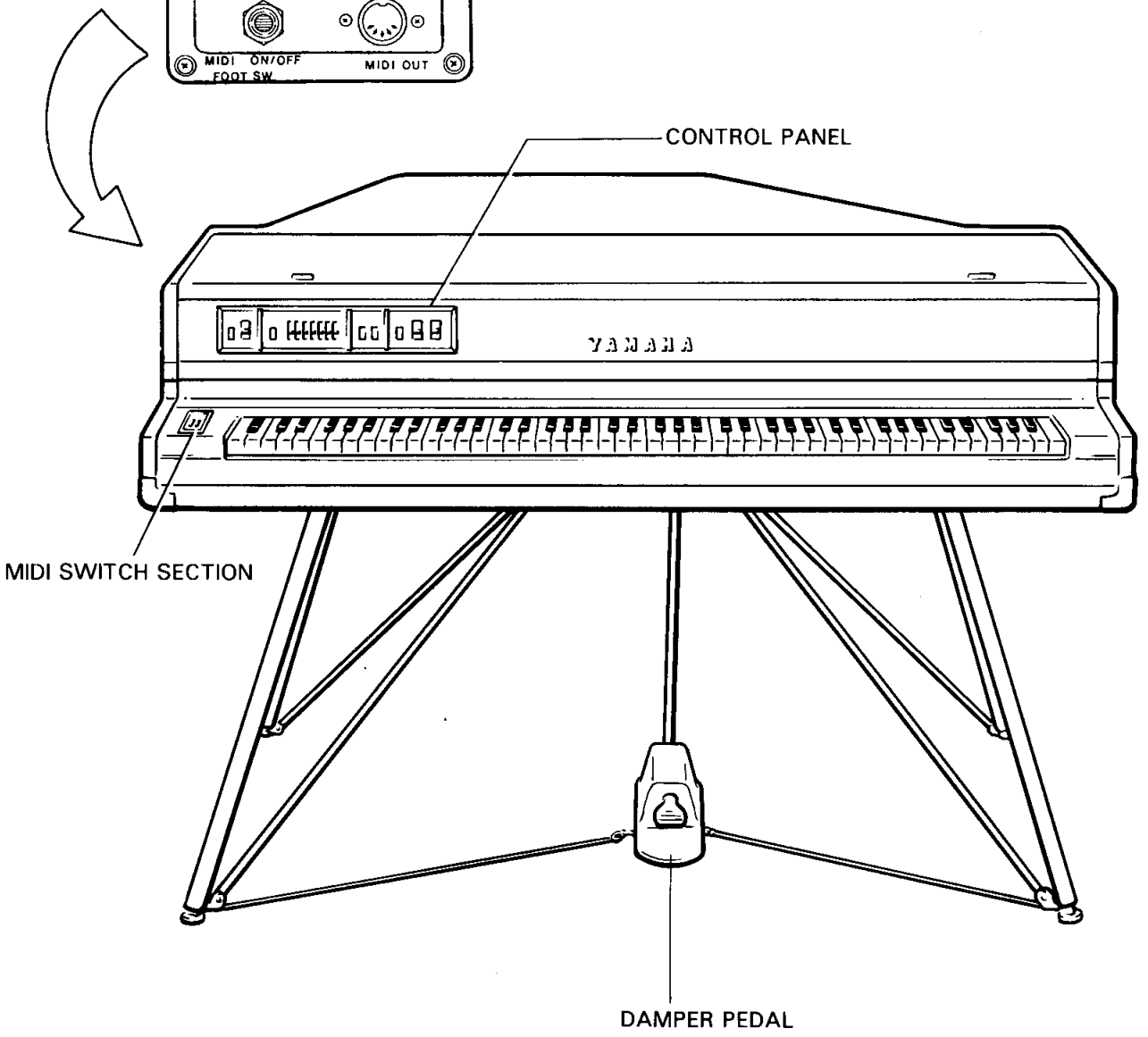

CONTROL PANEL

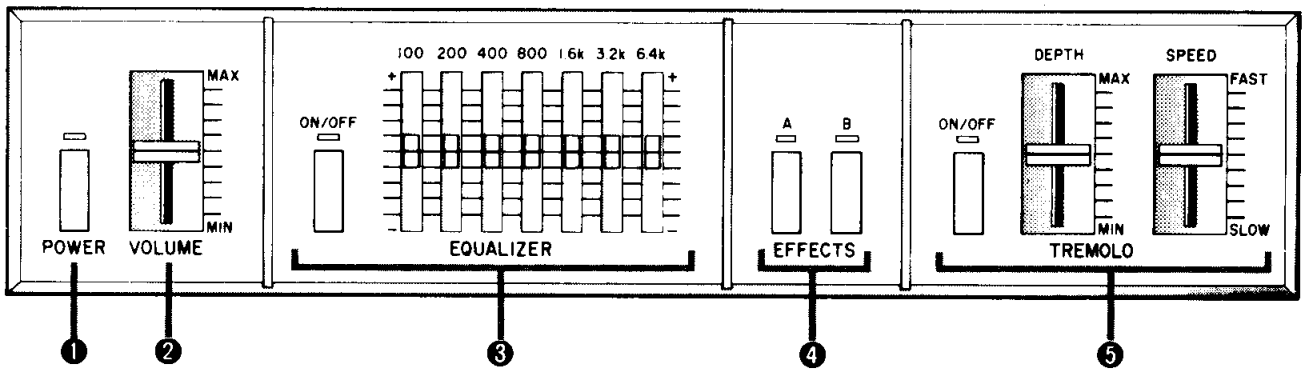

❶POWER

Power Switch.

❷VOLUME

For volume control.

❸EQUALIZER

Seven-band graphic equalizer for a maximum variable pitch of ± 12 dB. Can be turned ON or OFF with the switch. LED lamp lights when ON.

❹EFFECTS

When the switch is pushed, the effects connected to the SEND & RETURN terminals of the left panel will come ON. LED lamp lights when ON.

❺TREMOLO

By means of LFO, Tremolo provides amplitude variation with depth and speed control. Tremolo can be turned ON or OFF with the switch. The LED lamp lights when ON.
LFO phase difference is 180° between CH1 and CH2 (the two speakers), shifting the sound image between them.

MIDI SWITCH SECTION

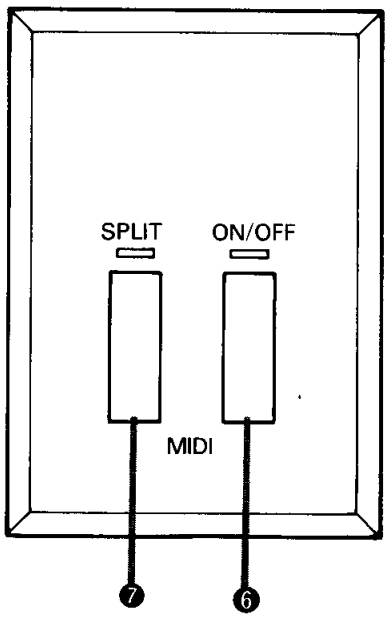

❻MIDI ON/OFF

Each time you press the ON/OFF switch, the ON/OFF LED will go on (MIDI ON) or off (MIDI OFF).

When MIDI ON, keyboard ON/OFF and sustain pedal ON/OFF information will be sent from MIDI OUT.
However, if you press MIDI ON while holding a key or the sustain pedal, that keyboard or sustain pedal information will not be sent. Also, if you press MIDI OFF while holding a key or the sustain pedal, MIDI will turn off when you release the key or sustain pedal.
When you turn the power on, MIDI will be ON.

❼MIDI SPLIT

You may set a upper or lower keyboard limit to the MIDI signals sent from MIDI OUT.
Each time you press the SPLIT switch, the SPLIT LED will alternate between ON (SPLIT ON) and OFF (SPLIT OFF).
When you press a key while holding down the SPLIT switch, that key will become the new split point. Next, if you press a key above (below) the split point, MIDI signals will be sent only for those keys above (below) the split point.
If you press only one key while holding down the SPLIT switch, only the split point will change, and whether the MIDI signals are sent for keys above or below the split point will not change.
When you turn the power on, SPLIT will be OFF.

CONNECTION

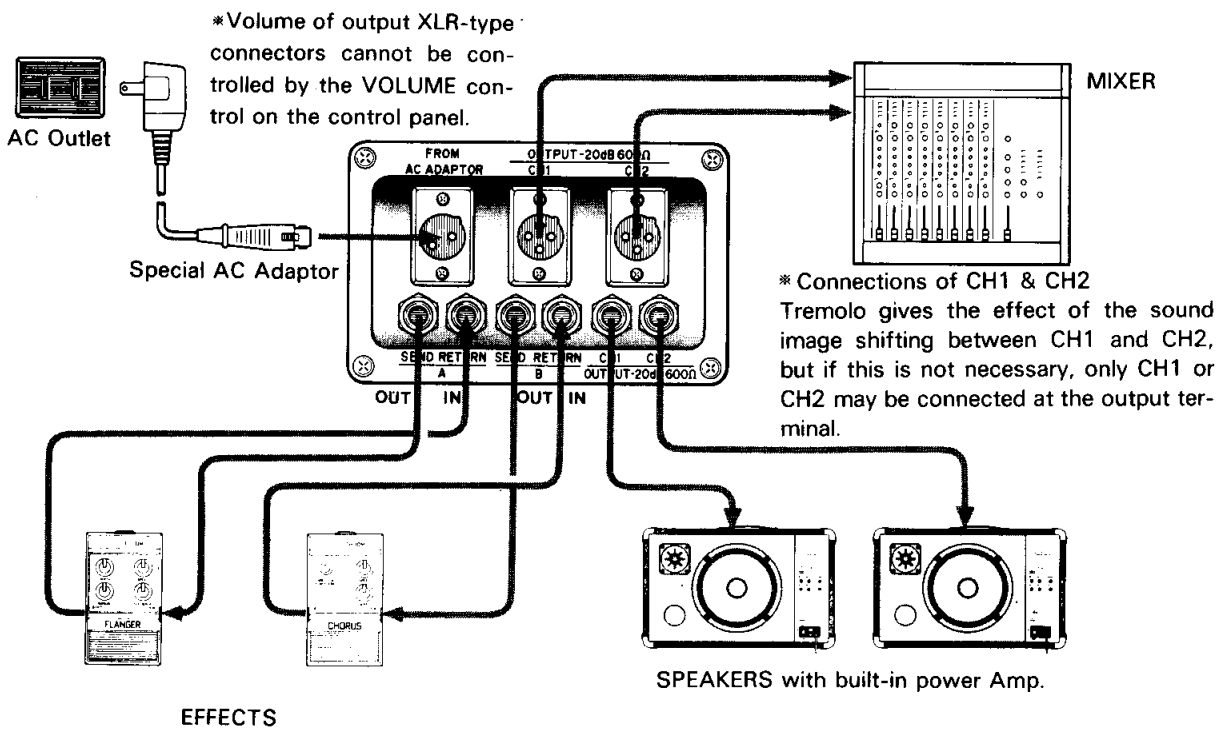

MIDI SECTION

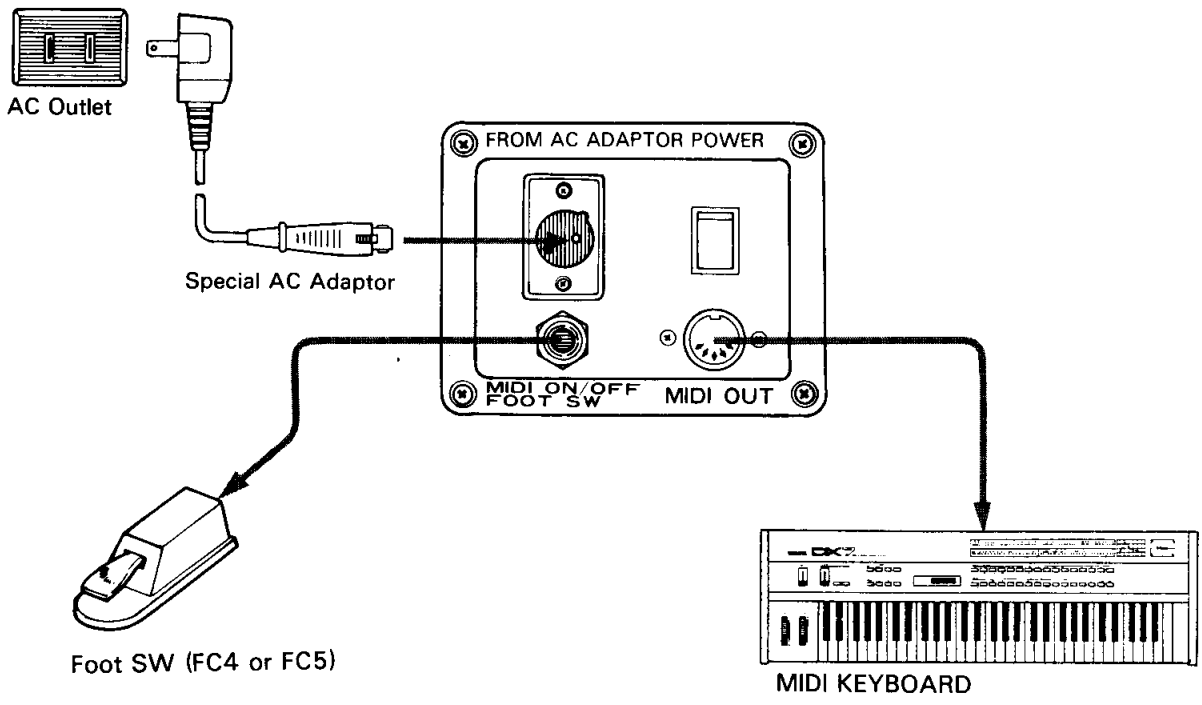

MIDI SYSTEMS WITH THE CP80M/CP70M

The MIDI connector on the CP80M/70M means that you can easily add the limitless tonal resources of a MIDI-equipped synthesizer to your electric grand sound, and play it from the piano keyboard. We will show some examples of MIDI systems built around the CP80M/70M. First, here is a system using the YAMAHA DX7 Digital Programmable Algorithm Synthesizer. With a MIDI cable, connect the CP80M/70M MIDI OUT to the DX7 MIDI IN, as shown in the diagram. Make sure that the DX7 power is turned on and it is connected to a suitable amp and speaker system.

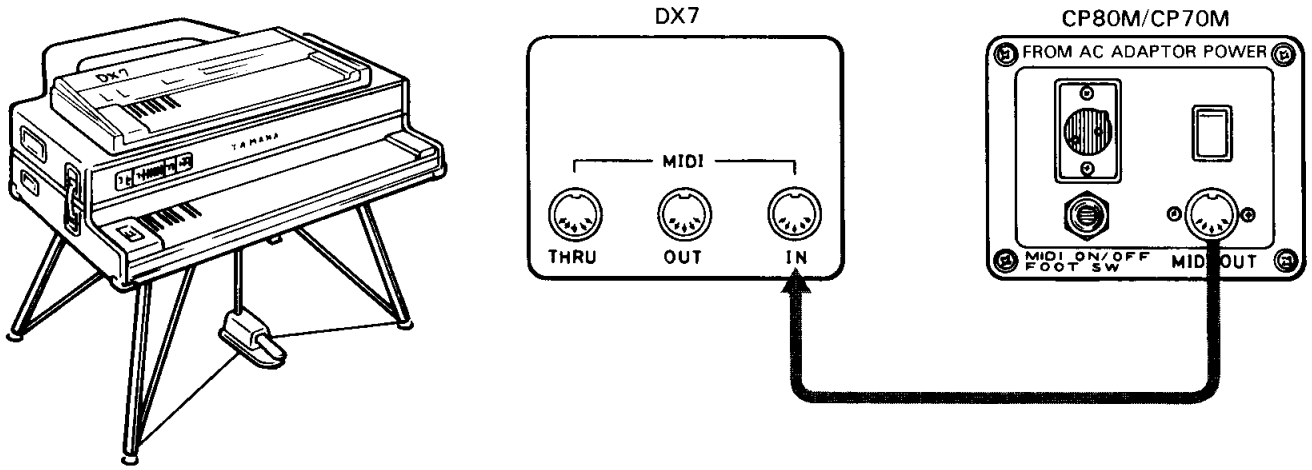

CP + DX7

When the CP is first turned on, the MIDI SWITCH is on (see page 5), and every note you play on the CP will send a MIDI signal for that note out of the MIDI OUT jack. The DX7 receives this signal and produces a note corresponding to the one you played on the CP. Velocity data is also sent for each note, so if you play loudly on the CP (and the DX voice is touch sensitive), the DX will produce a loud note.

Since both the DX and CP will be heard together, you can creatively combine DX voices with the electric piano sound. Some DX voices you might want to try are an electric piano sound, vibes, etc. Also you can make a nice chorus effect by slightly changing the tuning of the DX7. You can get another interesting sound by transposing the DX up or down a fifth or an octave.

CP + DX7 using MIDI SPLIT

When the CP is first turned on, MIDI SPLIT will be off. This means that every note you play on the CP will send out a MIDI signal. However, by using MIDI SPLIT, you can have only a certain part of the CP keyboard send MIDI signals.

For instance, you can split the keyboard and add a resounding DX bass voice to only the lower octaves of the CP. (See page 5 for details on MIDI SPLIT.) Notes you play above the split point will not produce sound from the DX.

Or, you can split the keyboard at a higher point and have MIDI output only for notes above the split point. Selecting a chime or vibe voice on the DX will add a beautiful sparkle to the high end of the CP. You can probably imagine many other combinations.

CP + two TX7s

Since the CP80M/70M is a MIDI keyboard, you can complete a MIDI system simply by adding a MIDI tone generator unit such as the YAMAHA TX7 FM Expander. The TX7 is basically a DX7 without a keyboard. Here we will show a possible system using two TX7s.
Connect the MIDI terminals of the CP and TX7s as shown in the diagram. Signals sent from the CP to the first TX7 will be passed on unchanged to the second TX7 via MIDI THRU. So, both TXs are getting the same MIDI signals.

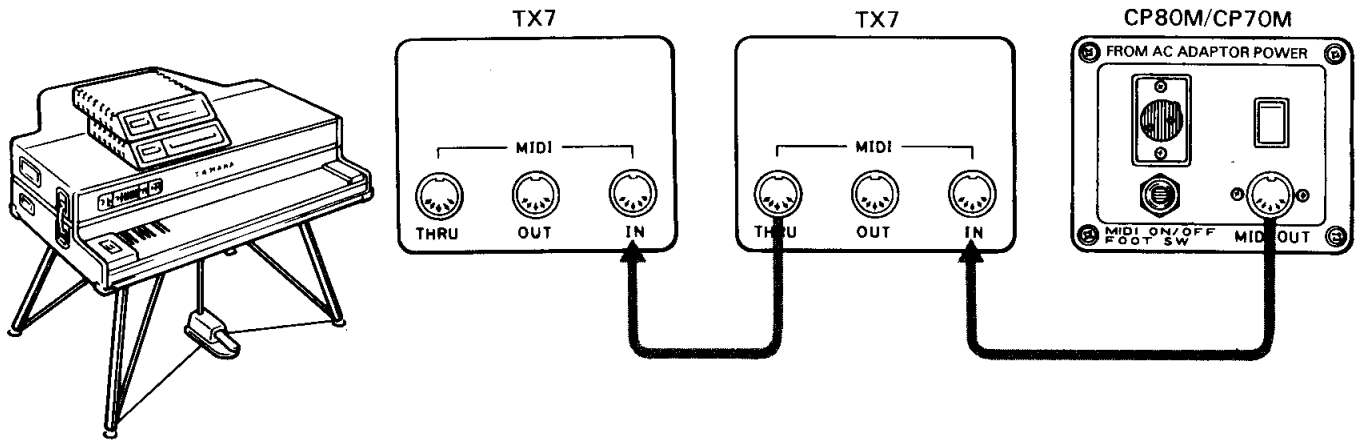

Turn MIDI SPLIT off. (See page 5.) Now, every key is sending MIDI signals. The TX7 has a function for setting high and low key limits. By using this, you can restrict each TX7 to only one section of the keyboard (see TX7 owner's manual). For example, try setting the first TX7 to produce sound for notes up to middle C, and set the second TX7 to produce sound for notes above middle C. By selecting different voices for each TX7, you can have a two-way keyboard split. Of course, you are not limited to using only two tone generators. Using MIDI THRU, you can daisy-chain together as many as you like.

Note; Using the CP's MIDI SPLIT and the TX7s key limit will result in "obvious" split points, ie, one note you have sound and the next note you don't. If you want to fade sounds in and out of keyboard areas more gradually, you can use the DX voice parameter Keyboard Level Scaling to change the operator output according to the keyboard area. See the DX7 manual for details.

Since the transmission channel of the CP is fixed on 1, it is necessary to set the reception channel of the receiver(s) to 1 or turn the OMNI MODE ON if it can be selected (TX7 etc.).

SPECIFICATIONS

Keyboard
CP 80M: 88 keys 7 ¼ Octave (A_1-c_5)
CP 70M: 73 keys 6 Octave (E_1-e_4)

Sound Production System
Striking action

Action
GP & Special Hammer

Pickups
Independent piezo electric pickup system

Volume Control
Equalizer Middle Frequency:
100, 200, 400, 800, 1.6K, 32K, 6.4KHZ
Variable Range: ±12 dB
Tremolo Speed: $0.8\ ^{+0.5HZ}_{-0.2HZ} \sim 10\ ^{+3HZ}_{-1HZ}$
Continuous Variation
Depth: Continuous possible within 40% Max. & 15% Min.
Volume

Control Switch
POWER, POWER (For MIDI) EQUALIZER (ON/OFF)
EFFECT A, B, TREMOLO (ON/OFF)
MIDI ON/OFF
MIDI SPLIT
(All with LED Except MIDI POWER SWITCH)

Connecting Terminals
Send A, Send B Out (−20 dBm, 600Ω)
Return A, Return B In (−20 dBm, 100KΩ)
Phone Jack Out 2ch (−20 dBm, 600Ω, unbalanced)
XLR-type Connector Out 2ch (−20 dBm, 600Ω, balanced)
MIDI OUT
FOOT SW (MIDI ON/OFF)

Rated Power Consumption
Upper: 1.2 W (17.5 V, 70 mA DC)
Lower: 0.9 W (18 V, 50 mA DC)
(in case of the AC adaptor in use).

External Appearance
Suitcase Style, Upper & Lower Units Separable, Leather Covering

Accessories
1) Leg .... 4 with base
4 Leg Stays
2) Pedal Pedal
Pedal Rod
} Packed in lower case
3) Special AC Adaptor x 2
4) Phone Jack Cord 2 (Packed in Lower Unit)

Dimensions

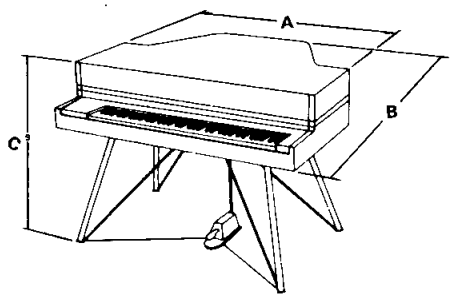

	CP80M	CP70M
A	1460mm (57-1/2")	1298mm (51")
B	1130mm (45")	1047mm (41-1/5")
C	941mm (37")	941mm (37")
Overall Weight	132kg (287 lbs)	112kg (242.9 lbs)

Overall Weight (when set up)

(upper unit only)

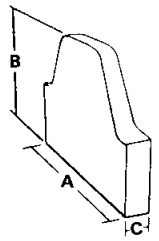

	CP80M	CP70M
A	1460mm (57-1/2")	1296mm (51")
B	986mm (38-4/5")	903mm (35")
C	173mm (6-3/4")	173mm (6-3/4")
Weight	86kg (189.6 lbs)	69kg (152.1 lbs)

(When stored in upper case)

(lower unit only)

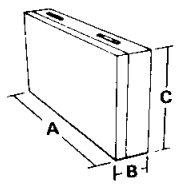

	CP80M	CP70M
A	1460mm (57-1/2")	1296mm (51")
B	636mm (25")	636mm (25")
C	243mm (9-4/7")	243mm (9-4/7")
Weight	67kg (147.7 lbs)	61kg (134.5 lbs)

(When stored in lower case)

*Specifications are subject to change without prior notice.

BLOCK DIAGRAM

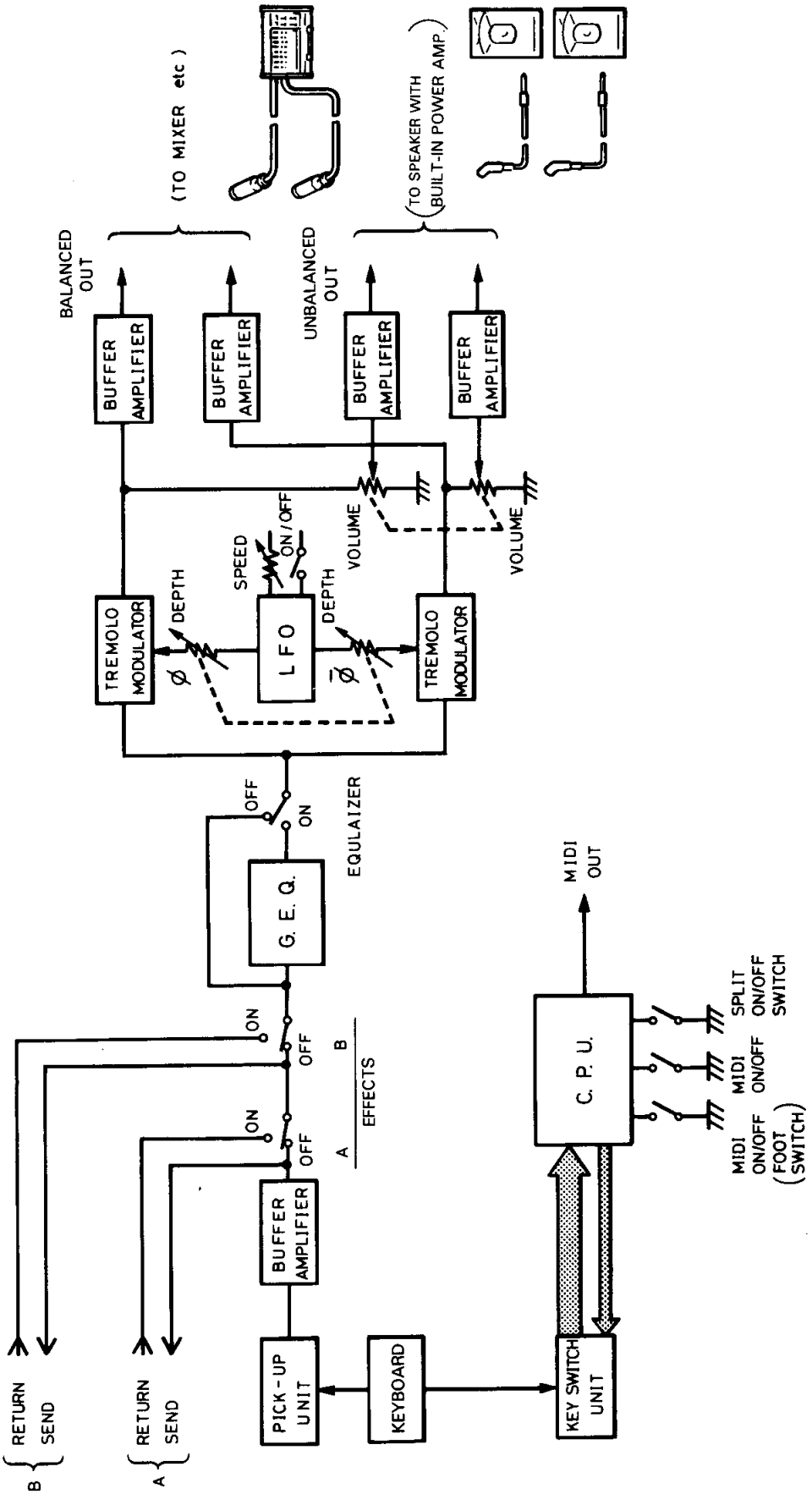

[ELECTRIC GRAND] Date : 2/6, 1985

Model CP70M/CP80M MIDI Implementation Chart Version : 1.0

Function ...		Transmitted	Remarks
Basic	Default	1	
Channel	Changed	×	
Mode	Default	3	
	Messages	×	
	Altered	**********	
Note Number		28-100(CP70M), 21-108(CP80M)	
	True voice	**********	
Velocity	Note ON	○ 90H, V=1-127	
	Note OFF	× 90H, V=0	
After Touch	Key's	×	
	Ch's	×	
Pitch Bender		×	
Control Change	64	V=0(off), V=127(on)	Sustain switch
Prog Change		×	
	True #	**********	
System Exclusive		×	
System Common	Song Pos	×	
	Song Sel	×	
	Tune	×	
System Real Time	Clock	×	
	Commands	×	
Aux Mes- sages	Local ON/OFF	×	
	All Notes OFF	×	
	Active Sense	○	
	Reset	×	
Notes			

Mode 1 : OMNI ON, POLY Mode 2 : OMNI ON, MONO ○ : Yes
Mode 3 : OMNI OFF, POLY Mode 4 : OMNI OFF, MONO × : No

FCC CERTIFICATION (USA)

While the following statements are provided to comply with FCC regulations in the United States, the corrective measures listed below are applicable worldwide.

This series of Yamaha combo equipment uses frequencies that appear in the radio frequency range and if installed in the immediate proximity of some types of audio or video devices (within three meters), interference may occur. This series of Yamaha combo equipment has been type tested and found to comply with the specifications set for a class B computing device in accordance with those specifications listed in subpart J of part 15 of the FCC rules. These rules are designed to provide a reasonable measure of protection against such interference. However, this does not guarantee that interference will not occur. If your combo equipment should be suspected of causing interference with other electronic devices, verification can be made by turning your combo equipment off and on. If the interference continues when your equipment is off, the equipment is not the source of interference. If your equipment does appear to be the source of the interference, you should try to correct the situation by using one or more of the following measures:

Relocate either the equipment or the electronic device that is being affected by the interference. Utilize power outlets for the combo equipment and the device being affected that are on different branch (circuit breaker or fuse) circuits, or install AC line filters.

In the case of radio or TV interference, relocate the antenna or, if the antenna lead-in is 300 ohm ribbon lead, change the lead-in to co-axial type cable.
If these corrective measures do not produce satisfactory results, please contact your franchised Yamaha combo equipment dealer for suggestions and/or corrective measures. If you cannot locate a franchised Yamaha combo equipment dealer in your general area contact the Combo Service Department, Yamaha International, 6600 Orangethrope Ave., Buena Park, CA 90620, U.S.A.

If your any reason, you should need additional information relating to radio or TV interference, you may find a booklet prepared by the Federal Communications Commission helpful:
"How to Identify and Resolve Radio -- TV Interference Problems". This booklet is available from the U.S. Government Printing Office, Washington D.C. 20402 -- Stock No. 004-000-00345-4.

SERVICE

The CP80M/CP70M are supported by Yamaha's worldwide network of factory trained and qualified dealer service personnel. In the event of a problem, contact your nearest Yamaha dealer.

SINCE 1887

YAMAHA

HAMAMATSU, JAPAN

OMD-124-1 8790.02 Ⓘ Printed in Japan