JST

Crimp

2.5mm
(.098") pitch

EH CONNECTOR

Radial Tape

Disconnectable Crimp style connectors

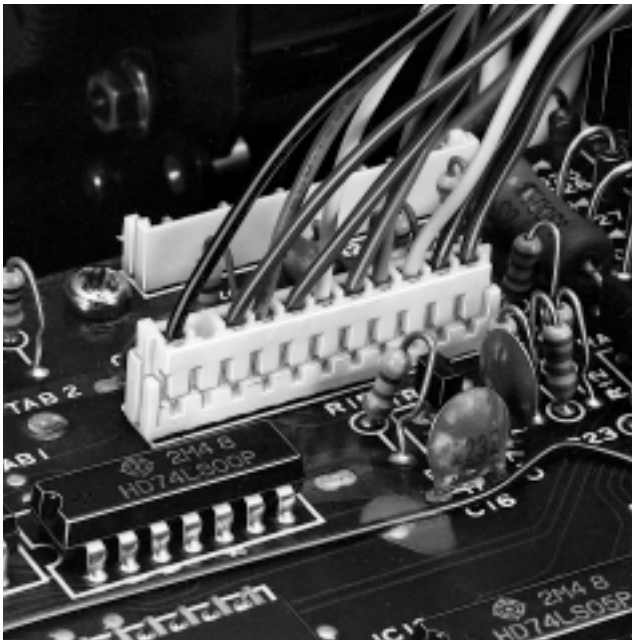

This, the thinnest, 2.5mm (.098") pitch connector, is 8.1mm (.319") in height after mounting and 3.8mm (.150") in width. It is designed to meet the demand for the high-density connection of internal wires to printed circuit boards. It is compact, highly reliable and low in cost.

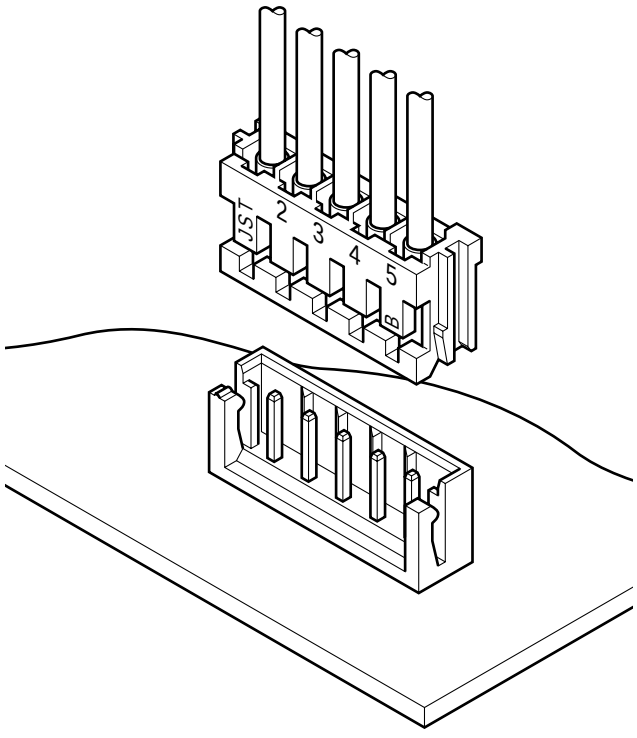

Features

• Compact and slim

This connector is designed to be compact and unusually thin. It measures only 8.1mm (.319") high after mounting and is just 3.8mm (.150") wide.

• Highly reliable contact

The contact has long dimples near the center that ensure continuity of low voltage and low current circuits at all times, even under conditions of vibration and abusive prying.

• Polarizing guides

The header and housing have guides to prevent improper mating.

• Whisker prevention

The contact material is treated with a reflow process, and the square post is copper-undercoated and tin/lead-plated for whisker prevention.

• Easy and effective crimping

Although the contact is compact, it has a long wire strip length, 2.6±0.4mm (.102"±.016"). This long length is very useful for automatic crimping and when crimping shielded wires.

Specifications

- Current rating: 3A AC, DC (AWG#22)
- Voltage rating: 250V AC, DC
- Temperature range: -25˚C to +85˚C
  (including temperature rise in applying electrical current)
- Contact resistance: Initial value/10m Ω max.
  After environmental testing/20m Ω max.
- Insulation resistance: 1,000M Ω min.
- Withstanding voltage: 800V AC/minute
- Applicable wire: AWG #32 to #22
- Applicable PC board thickness: 0.8 to 1.6mm(.031" to .063")

* Contact JST if Lead-Free product is required.
* Refer to "General Instruction and Notice when using Terminals and Connectors" at the end of this catalog.
* Contact JST for details.

Standards

0 Recognized E60389
1 Certified LR20812

REV.	DESCRIPTION	DATE	DESIGNED
△			

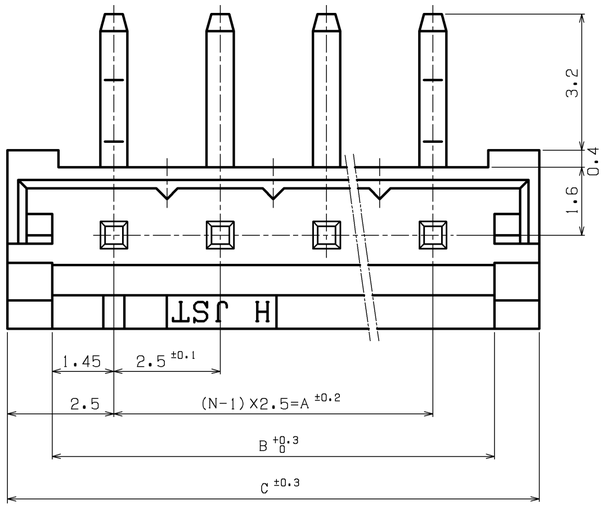

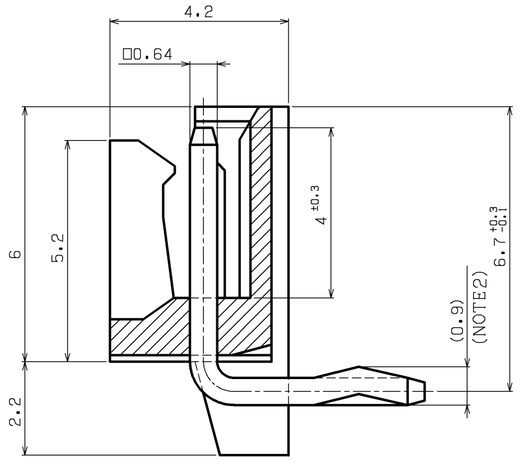

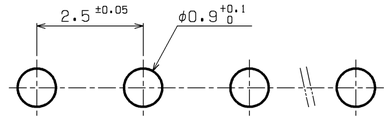

Recommendable P.C.Board hole layout

NOTE
1. Unless otherwise specified,
   tolerances are 0<L≦3.0; ±0.3
   3.0<L≦9.0; ±0.4
2. Posts at the both side shall be clinched.
3. Tolerance of hole pitch on PCB are not cumulative.

Part No.	Color
S( )B-EH (LF)(SN)	Natural
S( )B-EH-R (LF)(SN)	Red
S( )B-EH-E (LF)(SN)	Blue
S( )B-EH-K (LF)(SN)	Black
S( )B-EH-Y (LF)(SN)	Yellow
S( )B-EH-L (LF)(SN)	Lemon yellow
S( )B-EH-M (LF)(SN)	Green
S( )B-EH-N (LF)(SN)	Brown
S( )B-EH-O (LF)(SN)	Orange

Cir-cuits	Dimensions		
	A	B	C
2	2.5	5.4	7.5
3	5.0	7.9	10.0
4	7.5	10.4	12.5
5	10.0	12.9	15.0
6	12.5	15.4	17.5
7	15.0	17.9	20.0
8	17.5	20.4	22.5
9	20.0	22.9	25.0
10	22.5	25.4	27.5
11	25.0	27.9	30.0
12	27.5	30.4	32.5
13	30.0	32.9	35.0
14	32.5	35.4	37.5
15	35.0	37.9	40.0

No.	PART NAME	MATERIAL	SURFACE FINISH	REMARKS
2	WAFER	66NYLON		UL94V-0
1	POST	BRASS	COPPER-UNDERPLATED TIN-PLATED	

SIZE	UNIT	SCALE	PROJECTION	DATE
A2	METRIC	10:1		DEC. 7.2004

APPROVED	CHECKED	DESIGNED	DRAWN
T.N	S.S	K.S	M.Y

JST J.S.T.MFG.CO., LTD.

CUSTOMER

SERIES NAME	EH, HR CONNECTOR
PART No.	S( )B-EH-( ) (LF)(SN)
DRAWING No.	KRD-33426-1 RO

THIS DRAWING CONTAINS INFORMATION THAT IS PROPRIETARY TO J.S.T.
AND SHOULD NOT BE USED WITHOUT WRITTEN PERMISSION.

EC4113-2