ELKA

CONCORDE 100

schematic diagrams

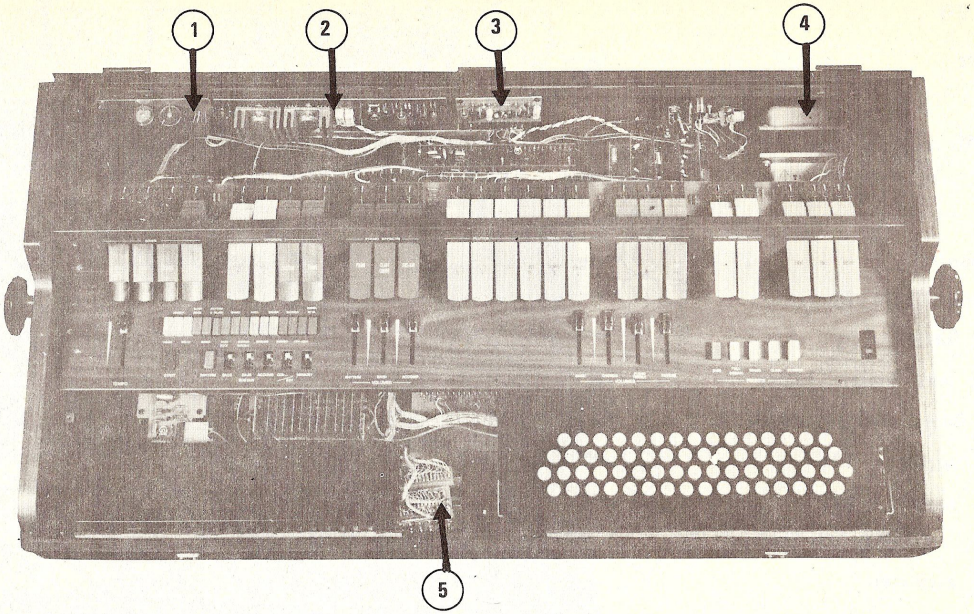

1. 99-20 - Power supply for amplifier
2. 99-19 - Amplifier
3. 99-17 - Preamplifier
4. Transformer
5. F000699 - F000700 - F000701 - Contacts assembly for bass and chord

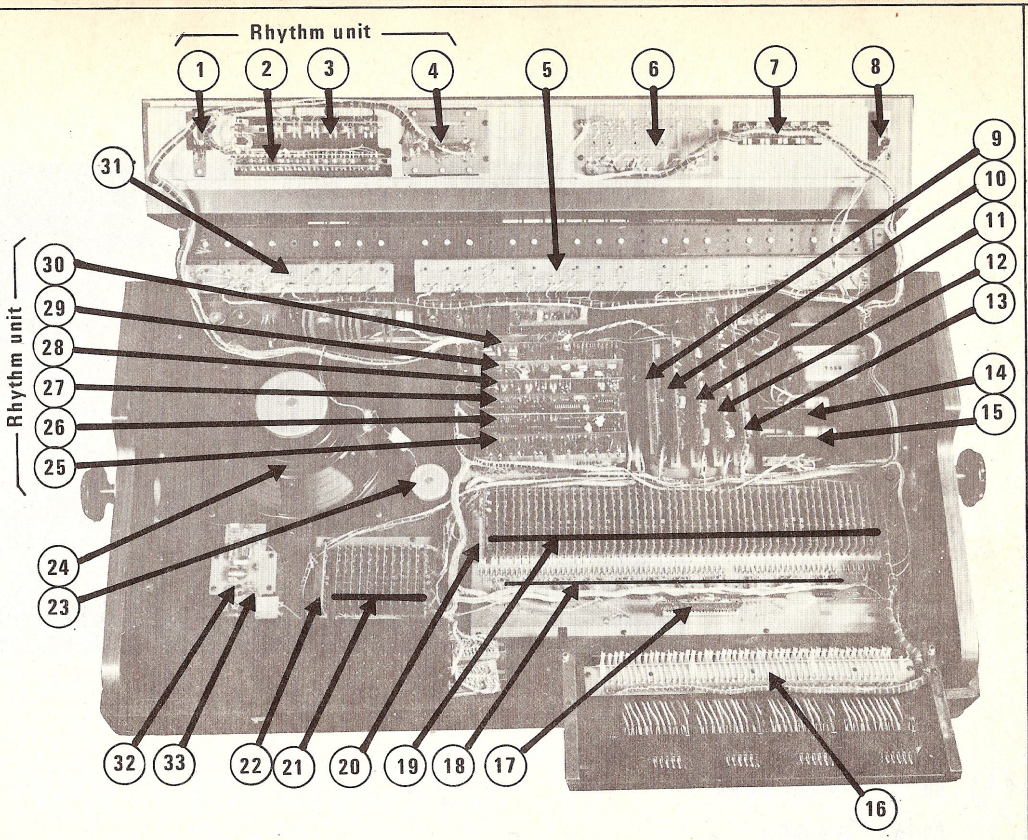

1. F000708 - Tempo
2. F000689 - F000690 - On - Off rhythm
3. F000709 - On - Off
4. F000710 - Volumes
5. F000679 - Tabs
6. F000681 - Volumes
7. F000682 - Presets
8. SW + L
9. 410CST0864 - Bass control
10. F000711 - Bass and Chord filters
11. F000676 - Treble filters
12. F000677 - Vibrato and Presets filters
13. F000674 - Piano filters and percussion
14. M000485 - Power supply - 12V
15. M000485 - Power supply - 27V
16. F000698 - Contacts assembly for treble
17. M000468 - Master oscillator
18. F000702 - Dividers
19. F000670 - Treble switches
20. F000671 - Treble preamplifies
21. F000670 - Chord switches
22. F000703 - Bass piano filters
23. Tweeter
24. Loud speaker
25. F000685 - Automatic accompaniment
26. F000705 - Automatic bass
27. 410CST0785 - Memory dividers and code
28. F000576 - Tone circuits
29. F000577 - Tone circuits
30. F000664 - Filters
31. F000707 - Tabs
32. F000683 - Reverb amplifier
33. Reverb unit

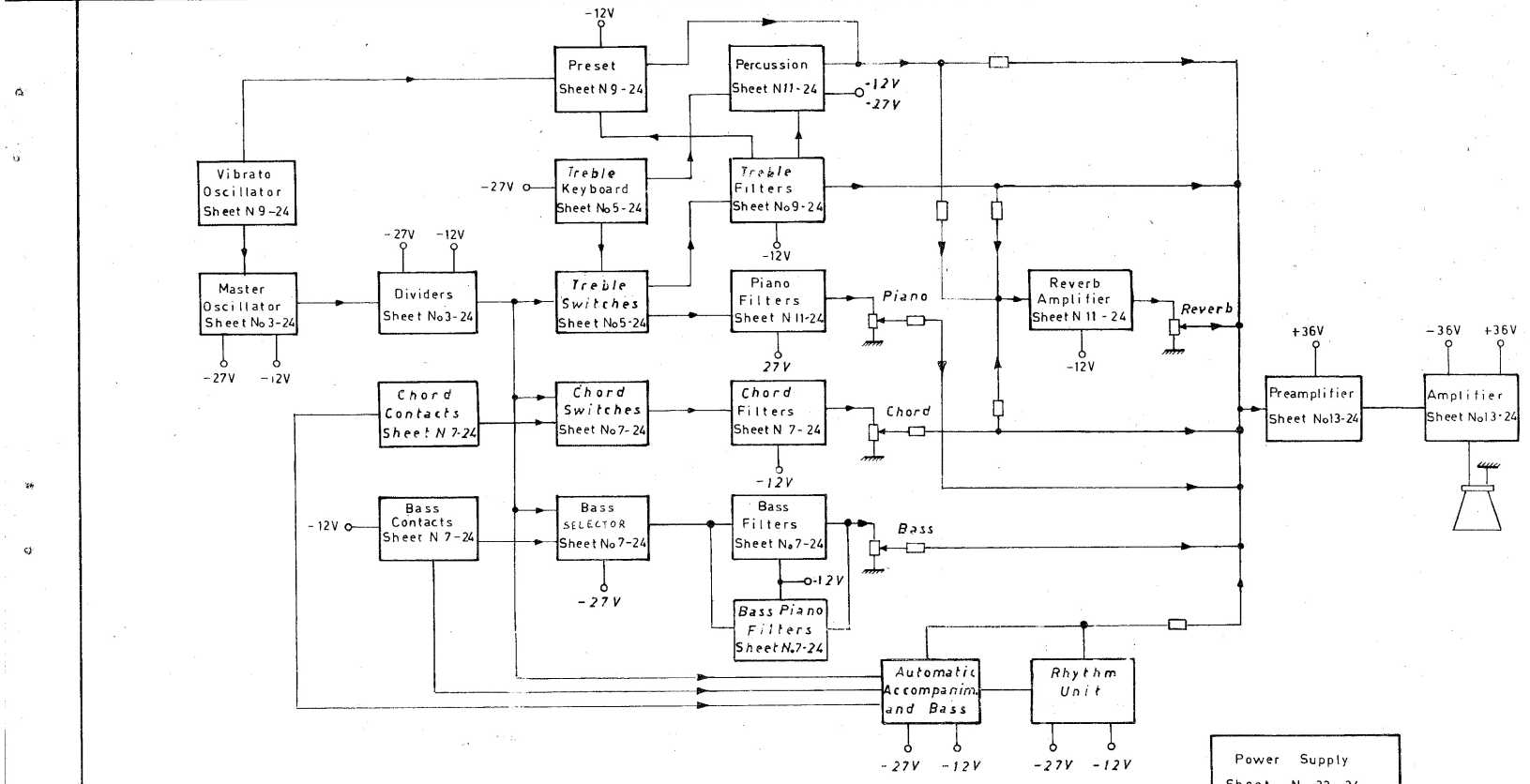

Transistors	Equivalents
BC 171	BC 173 - BC 108 - BC 208 - BC 209
BC 173	BC 109 - BC 209 - BC 239
BC 415 B	BC 205 B - BC 308 B
BC 415 C	BC 205 C - BC 308 C
BC 205 C	BC 308 C
BC 308 C	BC 205 C

All diodes are FDH 9439 Fairchild or BA 130

N. B.

1 The firm reserves the right to make changes without any warning and to their own discretion

2 The tensions are measured when the instrument is turned on but not played

Designed by

Drawn by Mario Vitali

Checked by

Model	Object	Sheet No 1 - 24
Concorde 100	Block Diagram	Date 6 - 12 - 76

F000702

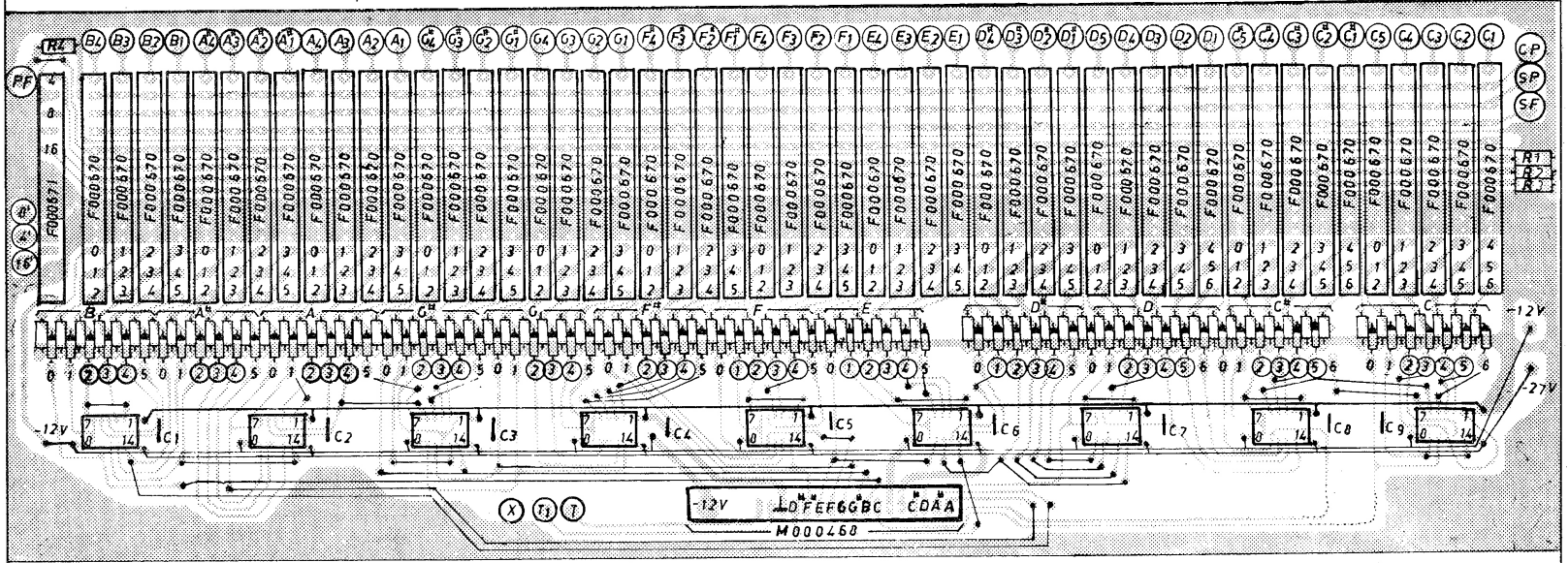

M000468

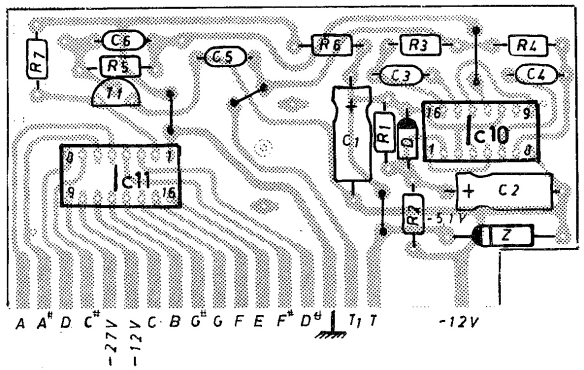

	Model	Object	Sheet N 2-24
	Concorde 100	Assembly of Printed Circuit	Date 25-2-77

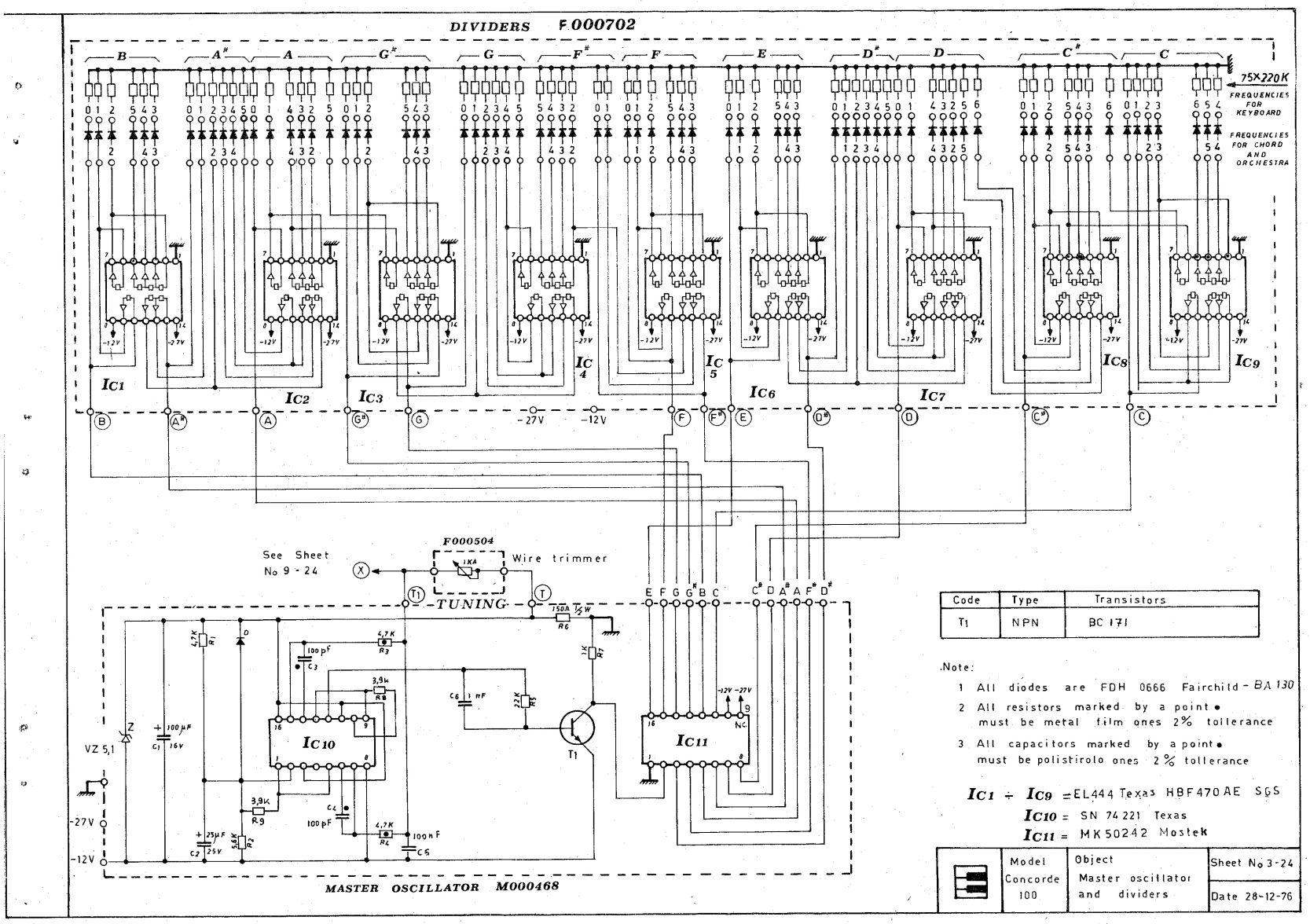

Code	Type	Transistors
T1	NPN	BC 171

Note:

1 All diodes are FDH 0666 Fairchild - BA 130

2 All resistors marked by a point • must be metal film ones 2% tollerance

3 All capacitors marked by a point • must be polistirolo ones 2% tollerance

IC1 ÷ IC9 = EL444 Texas HBF470AE SGS

IC10 = SN 74221 Texas

IC11 = MK50242 Mostek

	Model	Object	Sheet No 3-24
	Concorde 100	Master oscillator and dividers	Date 28-12-76

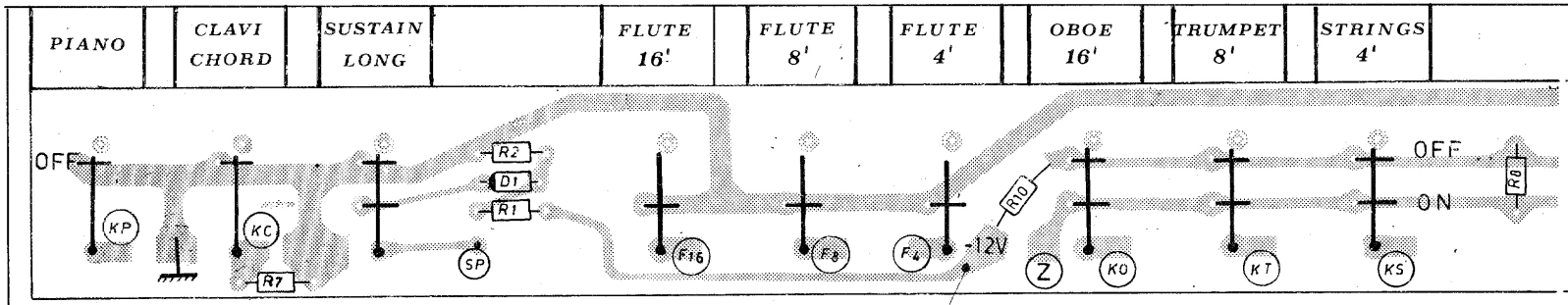

F000679

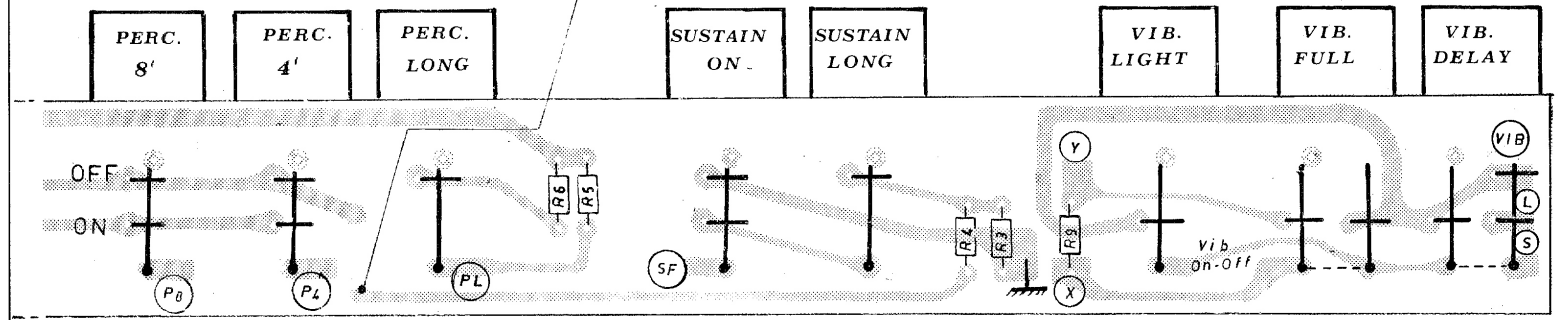

F000679

F000671

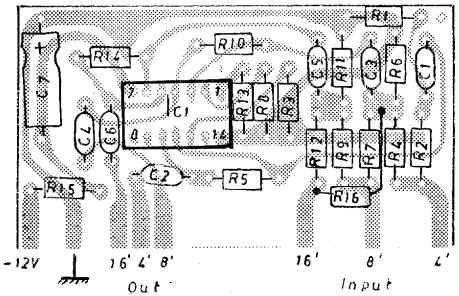

F000670

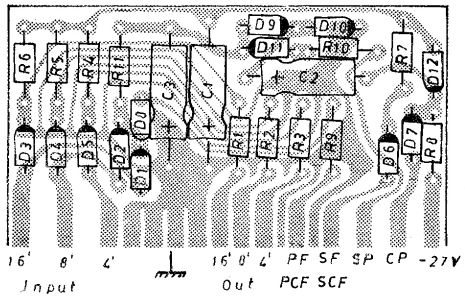

	Model Concorde 100	Object: Assembly of Printed Circuit	Sheet N°4-24
			Date 22-2-77

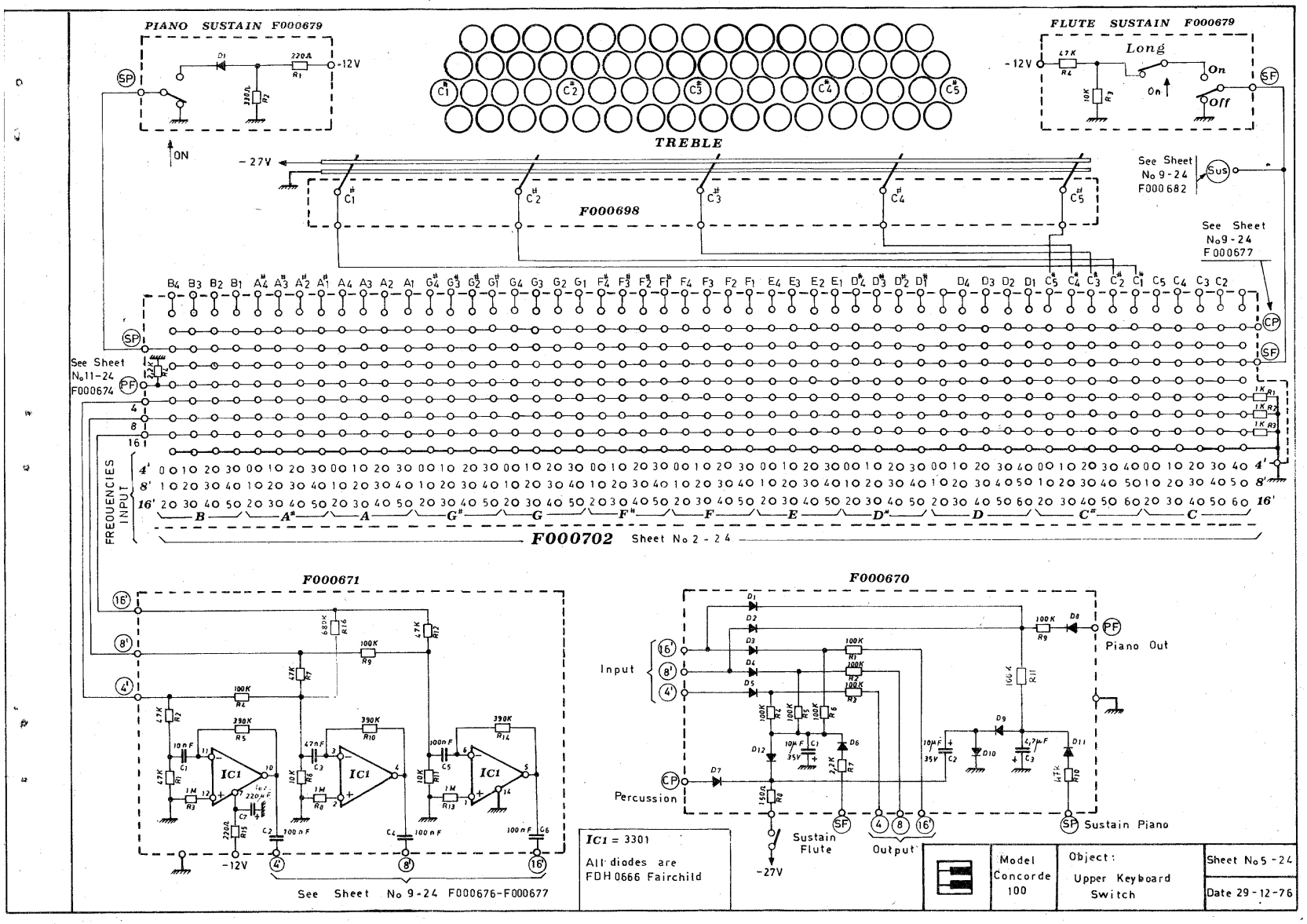
PIANO SUSTAIN F000679
FLUTE SUSTAIN F000679
Long
On
Off
TREBLE
F000698
See Sheet No 9-24 F000682
See Sheet No 9-24 F000677
See Sheet No 11-24 F000674
FREQUENCIES INPUT
F000702 Sheet No 2-24
F000671
F000670
Input
Piano Out
Percussion
Sustain Flute
Output
Sustain Piano
IC1 = 3301
All diodes are FDH 0666 Fairchild
See Sheet No 9-24 F000676-F000677
Model Concorde 100
Object: Upper Keyboard Switch
Sheet No 5-24
Date 29-12-76

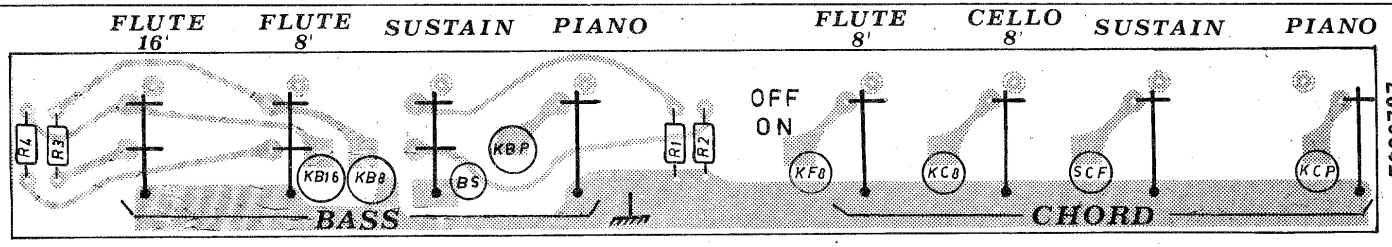

F000703

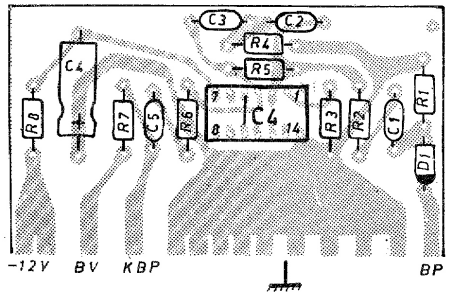

F000711

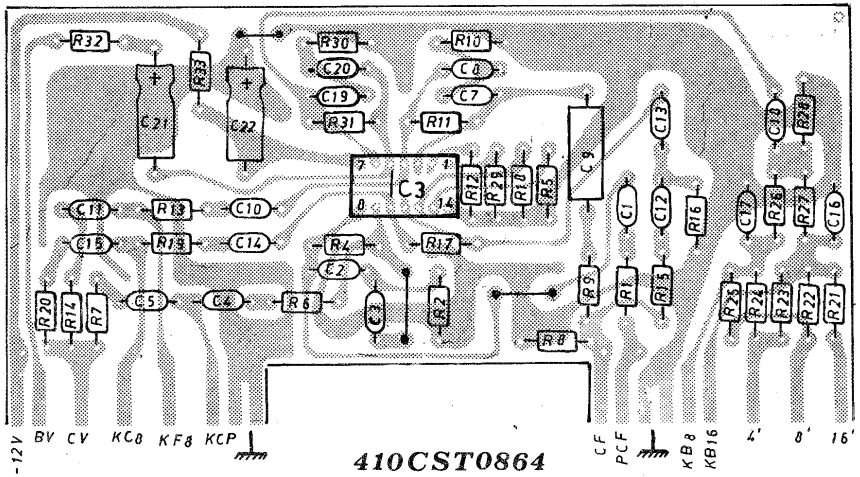

N.B.

Switches T1....T12 Vary according to the various international chord sistems

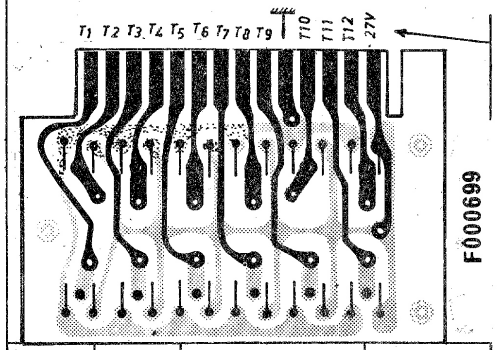

Switches for Bass and Automatic Bass

410CST0864

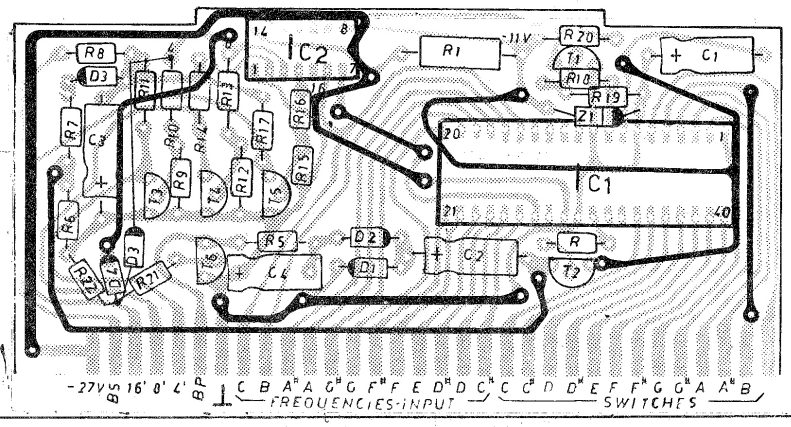

	Model	Object:	Sheet No. 6-24
	Concorde 100	Assembly of Printed Circuit	Date 23-2-76

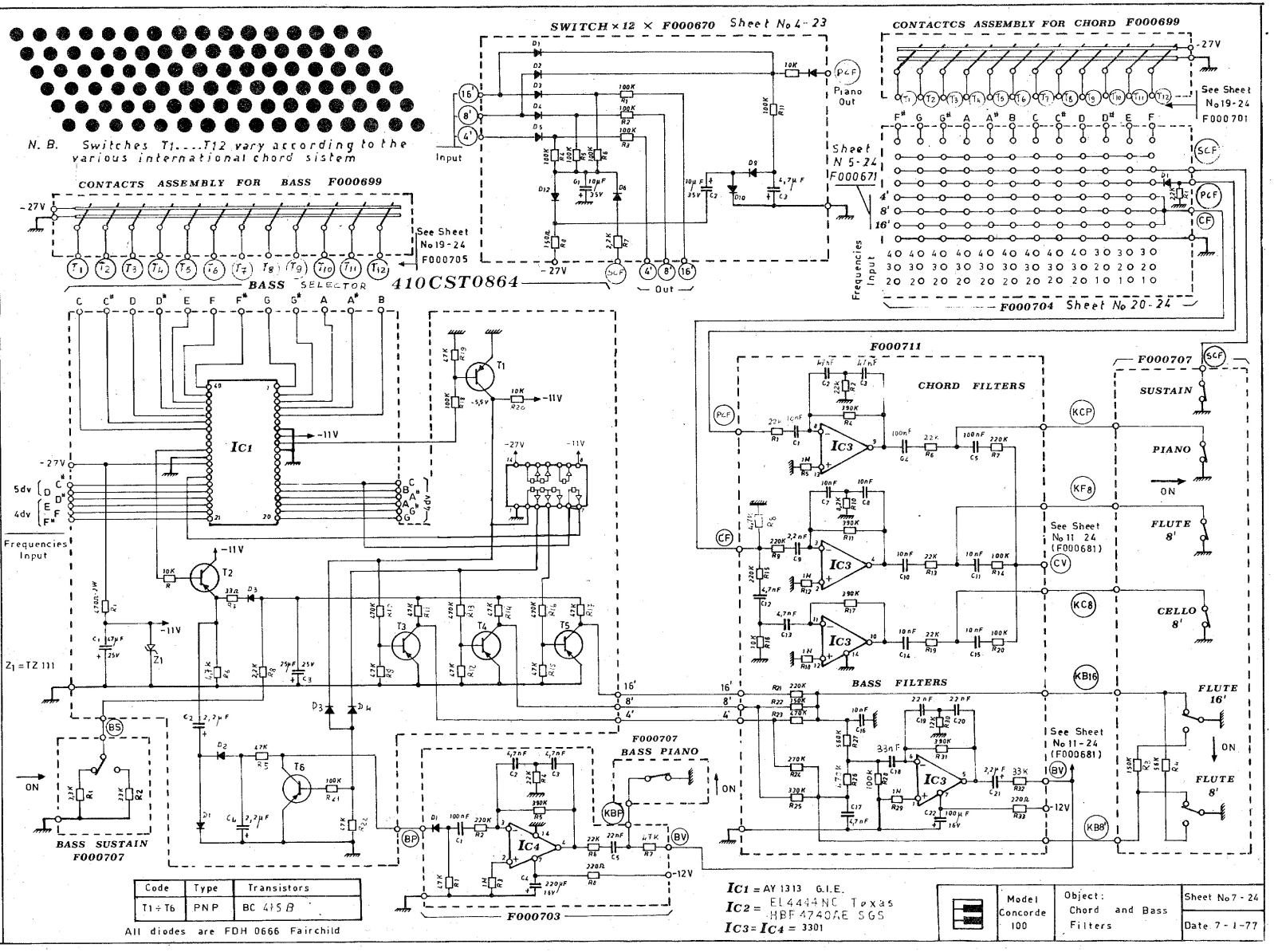

Code	Type	Transistors
T1 ÷ T6	PNP	BC 415 B

All diodes are FDH 0666 Fairchild

IC1 = AY 1313 G.I.E.
IC2 = EL4444NC Texas
HBF 4740AE SGS
IC3 = IC4 = 3301

	Model	Object:	Sheet No 7 - 24
	Concorde 100	Chord and Bass Filters	Date 7 - 1 - 77

F000676

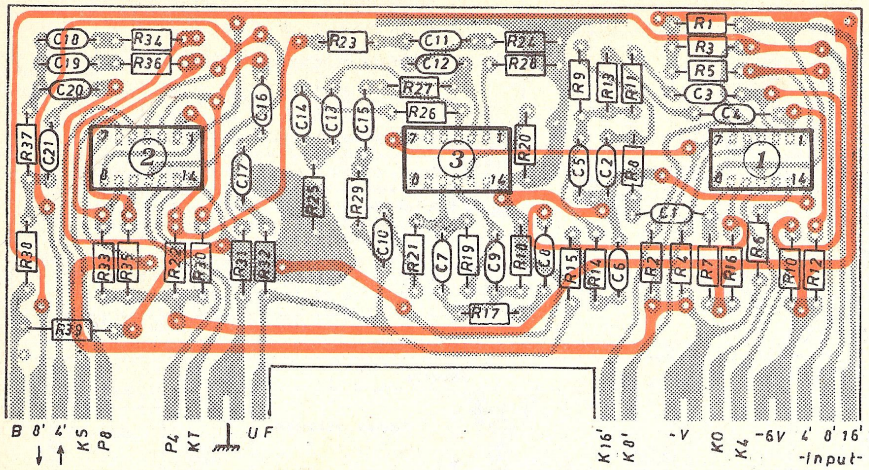

F000677

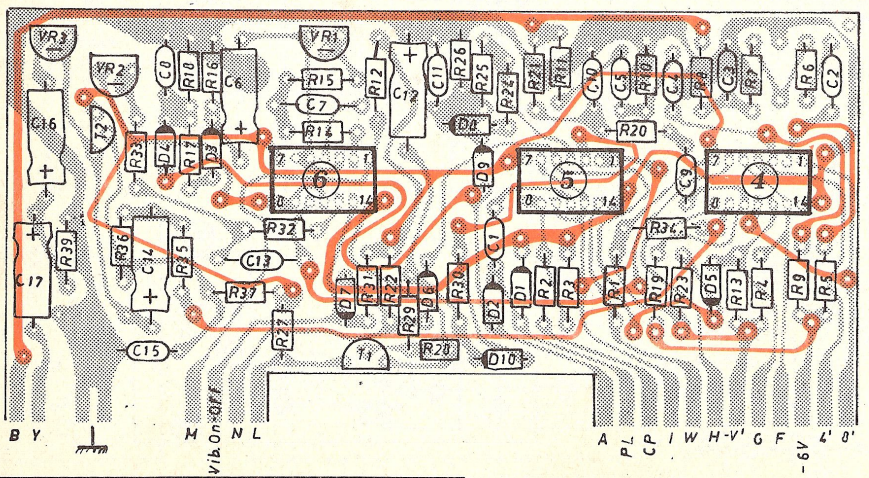

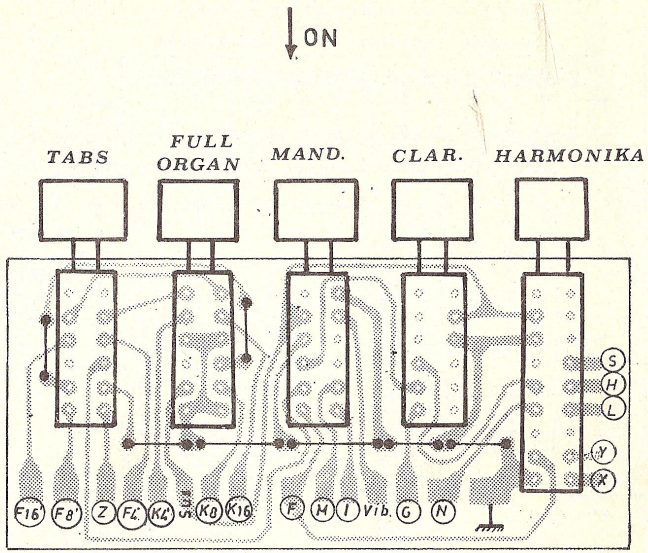

F000682

	Model Concorde 100	Object: Assembly of Printed Circuit	Sheet No. 8-24
			Date 17-2-77

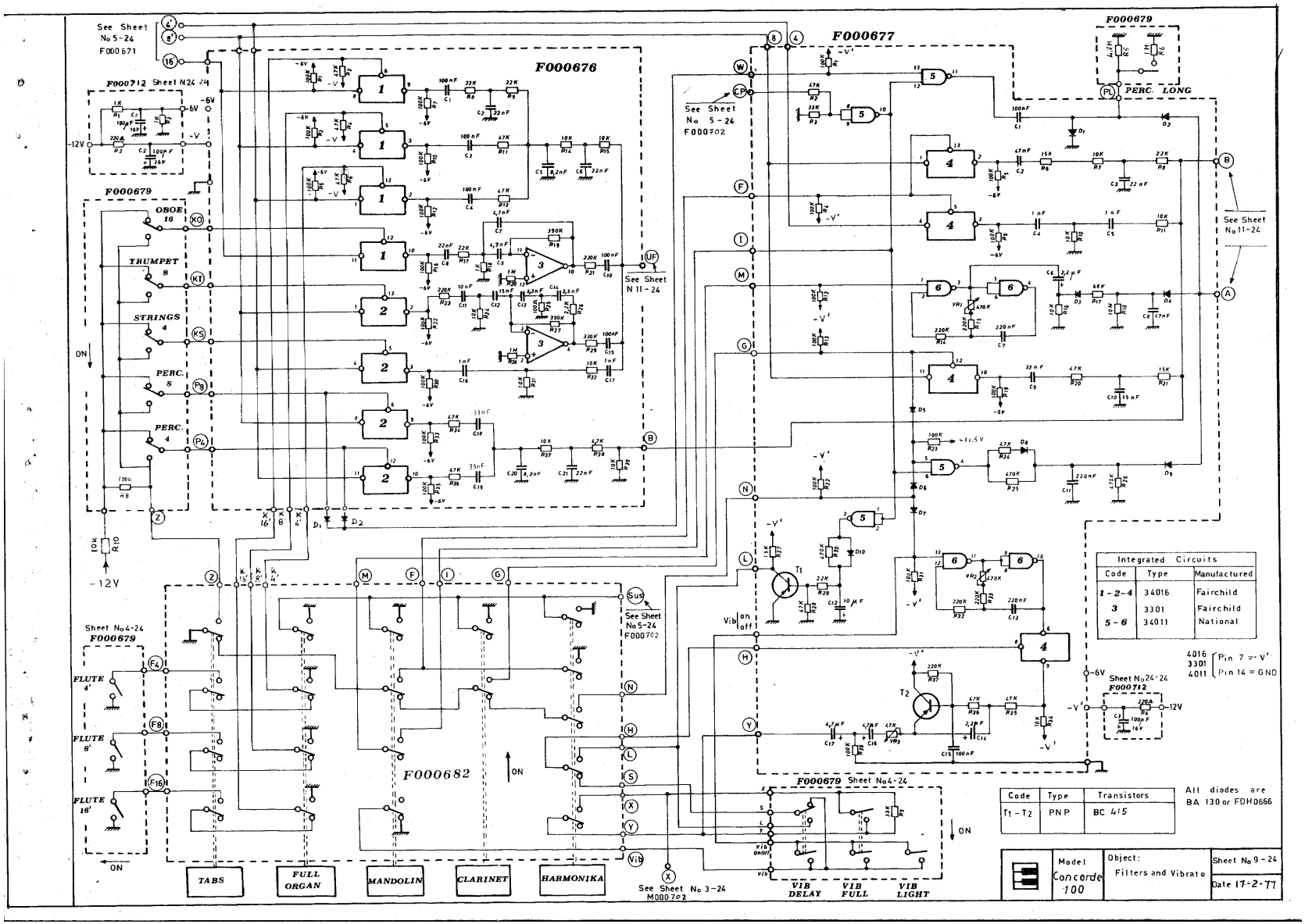
F000676
F000677
F000679
F000682
F000712 Sheet N24 24
See Sheet No 5-24 F000671
See Sheet No 5-24 F000702
See Sheet N 11-24
See Sheet No 11-24
OBOE 16
THUMPET 8
STRINGS 4
PERC. 8
PERC. 4
ON
-12V
PERC. LONG
Sheet No 4-24 F000679
FLUTE 4'
FLUTE 8'
FLUTE 16'
TABS
FULL ORGAN
MANDOLIN
CLARINET
HARMONIKA
See Sheet No 3-24 M000702
VIB DELAY
VIB FULL
VIB LIGHT
Sheet No 24-24 F000712
Integrated Circuits
Code | Type | Manufactured
1-2-4 | 34016 | Fairchild
3 | 3301 | Fairchild
5-6 | 34011 | National
4016 / 3301 / 4011 Pin 7 = -V' Pin 14 = GND
Code | Type | Transistors
T1 - T2 | PNP | BC 415
All diodes are BA 130 or FDH0666
Model Concorde 100
Object: Filters and Vibrato
Sheet No 9 - 24
Date 17-2-77

F000674 (427GR06741)

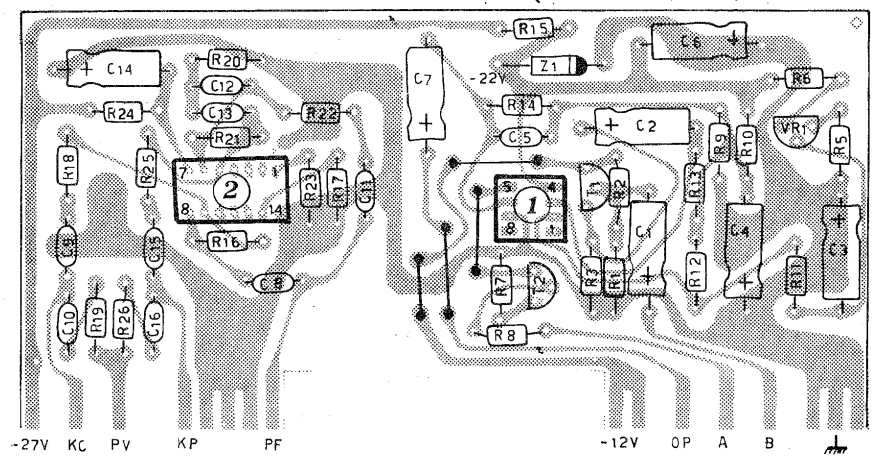

F000683

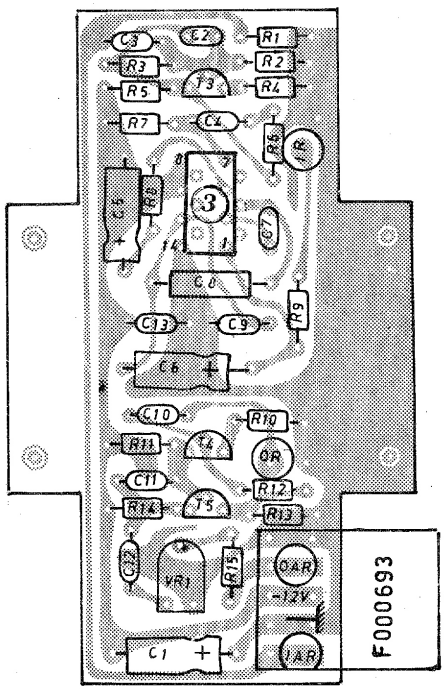

VOLUMES

BASS CHORD PIANO REVERB

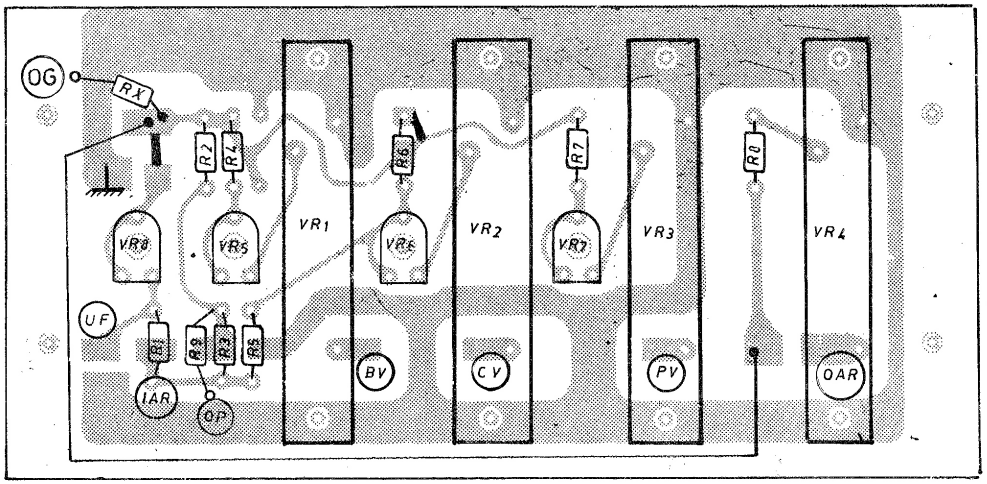

F000681

	Model	Object:	Sheet N° 10-24
	Concorde 100	Assembly of Printed Circuit	Date 17-2-77

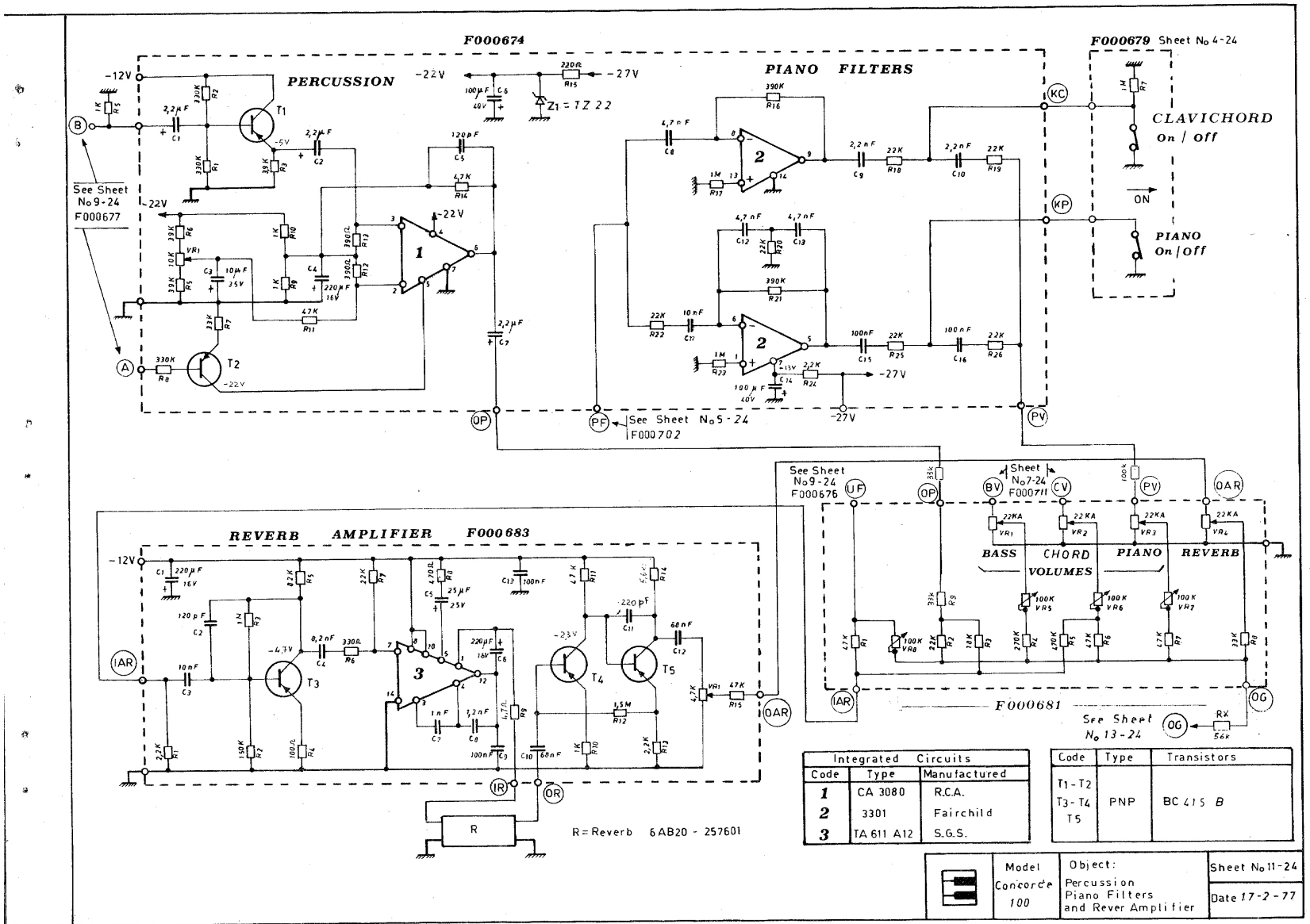

Integrated Circuits		
Code	Type	Manufactured
1	CA 3080	R.C.A.
2	3301	Fairchild
3	TA 611 A12	S.G.S.

Code	Type	Transistors
T1 - T2 T3 - T4 T5	PNP	BC 415 B

Model	Object:	Sheet No 11-24
Concorde 100	Percussion Piano Filters and Rever Amplifier	Date 17-2-77

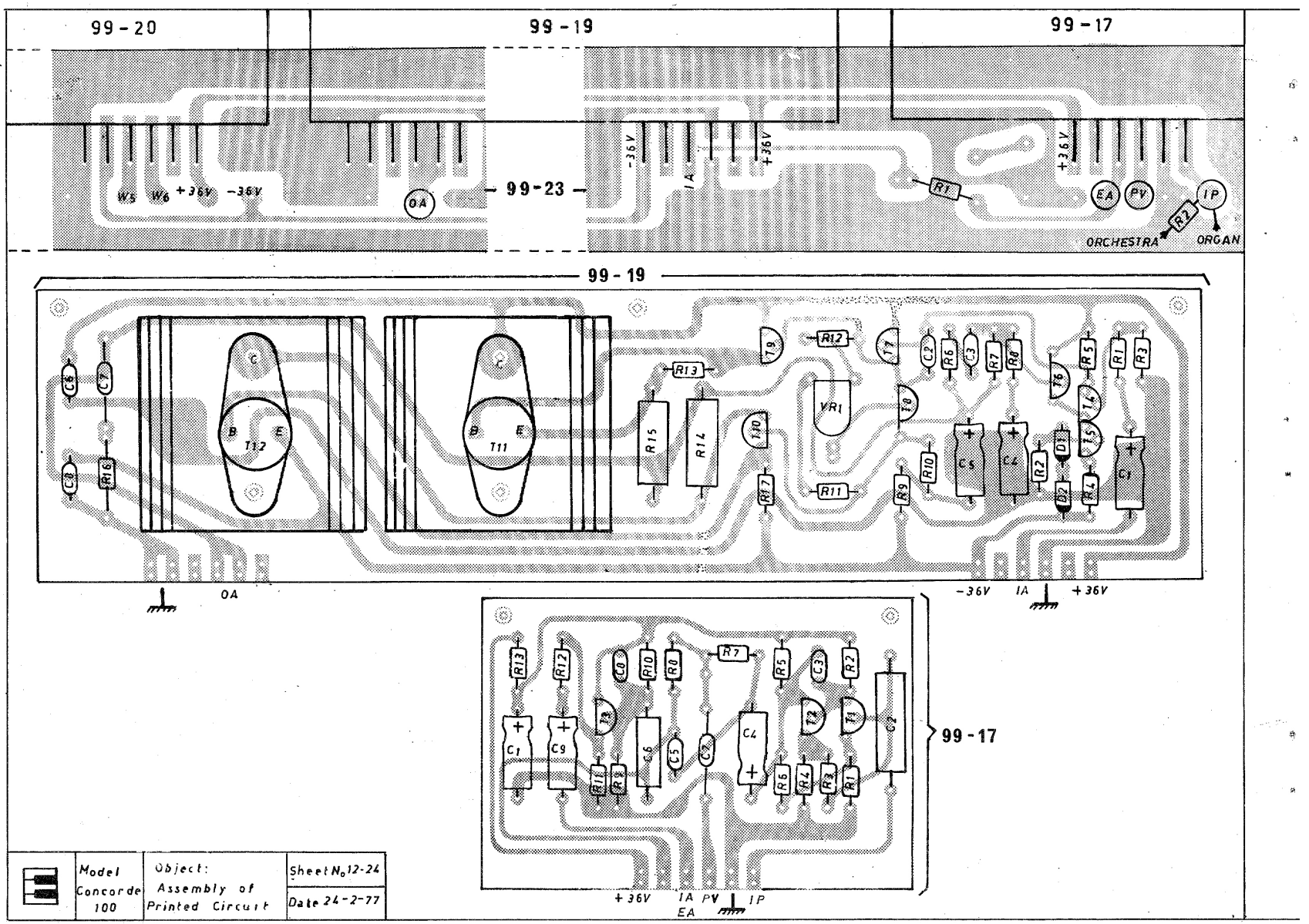
99 - 20
99 - 19
99 - 17
W5
W6
+36V
-36V
0A
99-23
-36V
IA
+36V
+36V
R1
EA
PV
IP
R2
ORCHESTRA
ORGAN
99 - 19
C8
C7
C6
R16
B
E
C
T12
T11
R15
R14
R13
T9
T10
R17
VR1
R12
T7
T8
R11
R9
C2
R6
C3
R7
R8
T6
T5
T4
T3
T2
T1
C5
C4
R10
R2
D1
D2
R5
R4
R1
R3
C1
0A
-36V
IA
+36V
R13
R12
C8
R10
R8
R7
R5
C3
R2
T3
T2
T1
C7
C1
C9
C6
C5
C4
R16
C8
R6
R4
R3
R1
99 - 17
+36V
IA
PV
IP
EA
Model
Concorde
100
Object:
Assembly of
Printed Circuit
Sheet No 12-24
Date 24-2-77

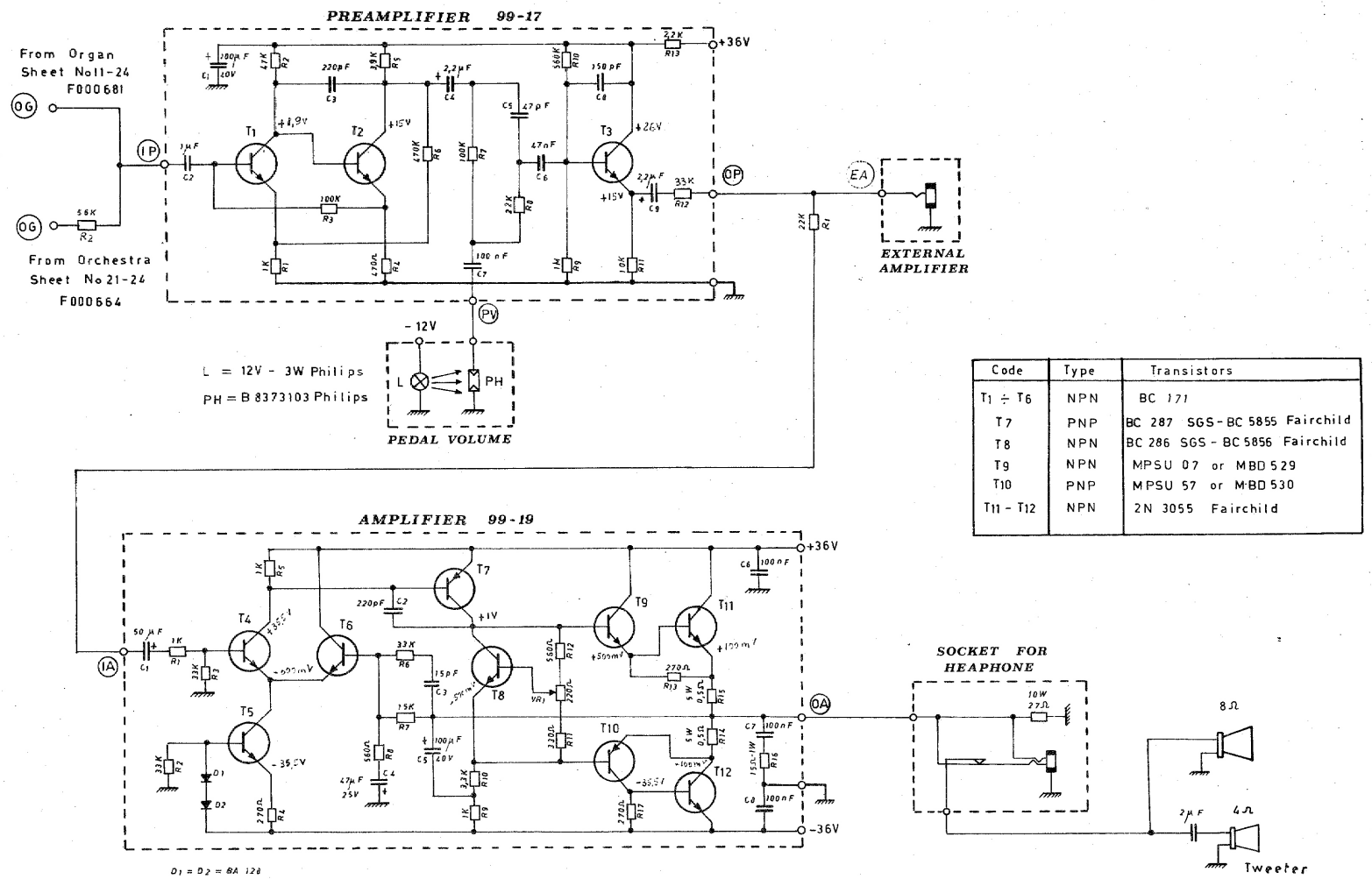

Code	Type	Transistors
T1 ÷ T6	NPN	BC 171
T7	PNP	BC 287 SGS - BC 5855 Fairchild
T8	NPN	BC 286 SGS - BC 5856 Fairchild
T9	NPN	MPSU 07 or MBD 529
T10	PNP	MPSU 57 or MBD 530
T11 - T12	NPN	2N 3055 Fairchild

	Model	Object:	Sheet N 13-24
	Concorde 100	Amplifier	Date 1-2-77

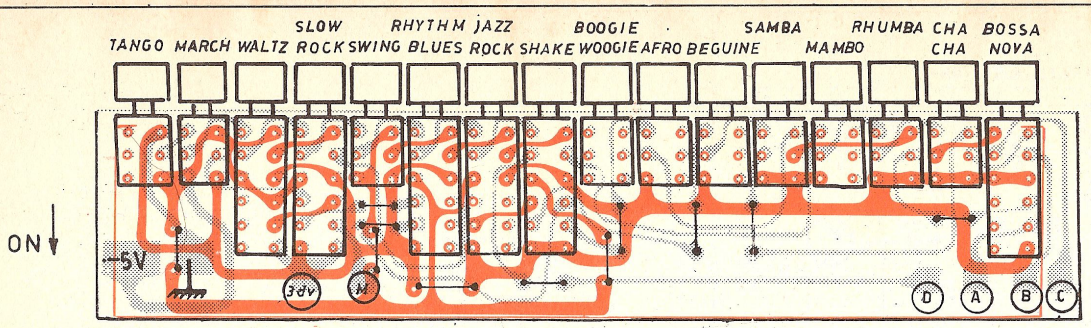

F000689 F000690

410CST0785

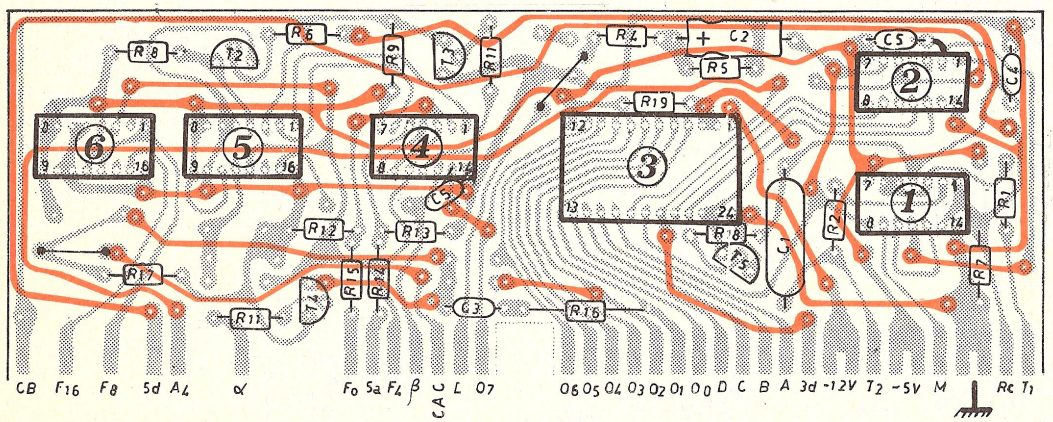

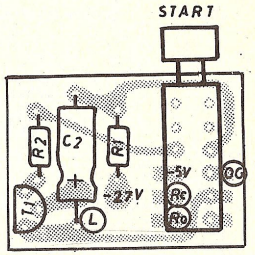

410CST0716

ON

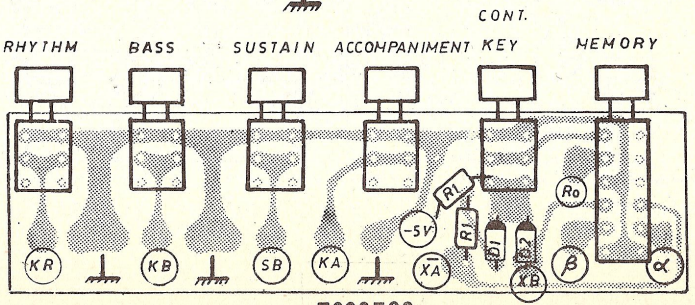

F000709

	Model Concorde 100	Object: Assembly of Printed Circuit	Sheet N°14-24
			Date 20-2-77

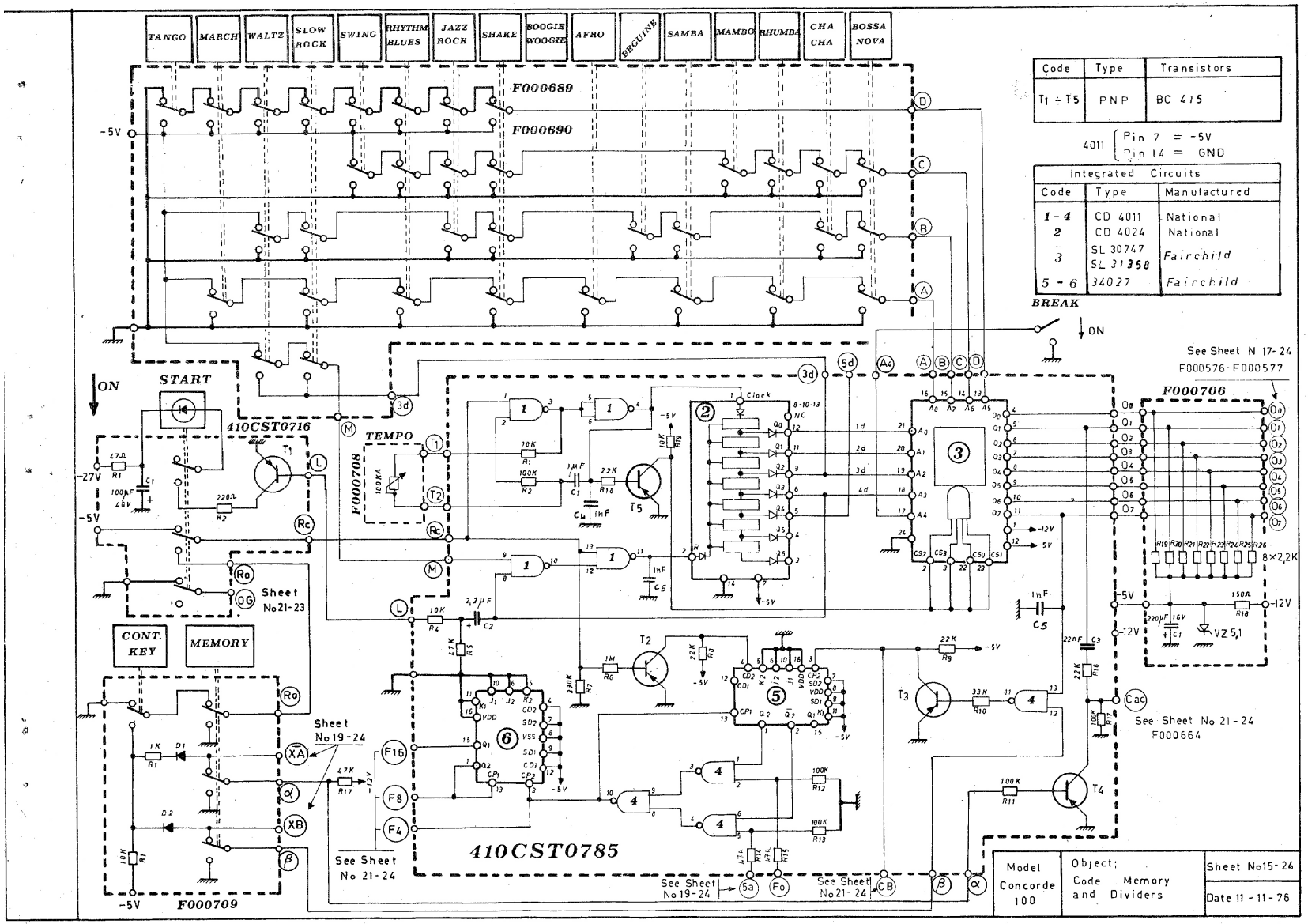

Code	Type	Transistors
T1 ÷ T5	PNP	BC 415

4011 { Pin 7 = -5V
Pin 14 = GND

Integrated Circuits		
Code	Type	Manufactured
1-4	CD 4011	National
2	CD 4024	National
3	SL 30747 SL 31350	Fairchild
5-6	34027	Fairchild

F000576

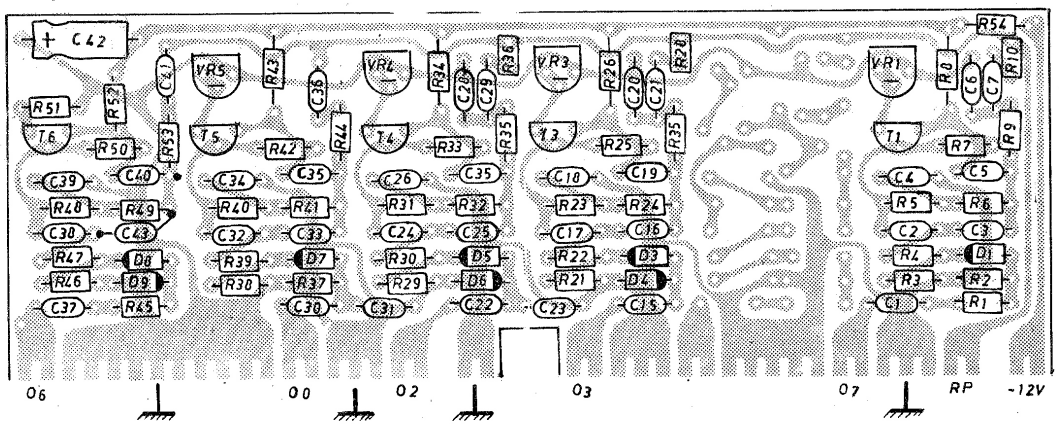

F000577

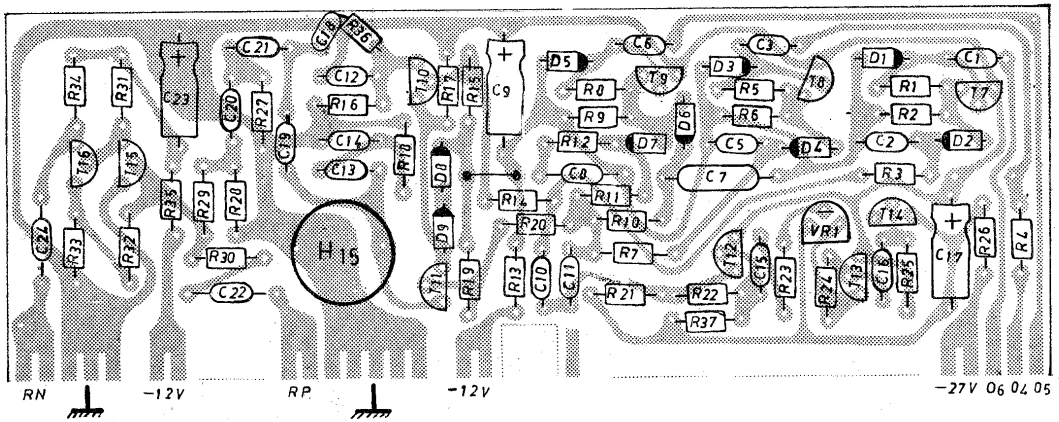

	Model	Object:	Sheet No.
	Concorde 100	Assembly of Printed Circuit	16-24
			Date 18-2-77

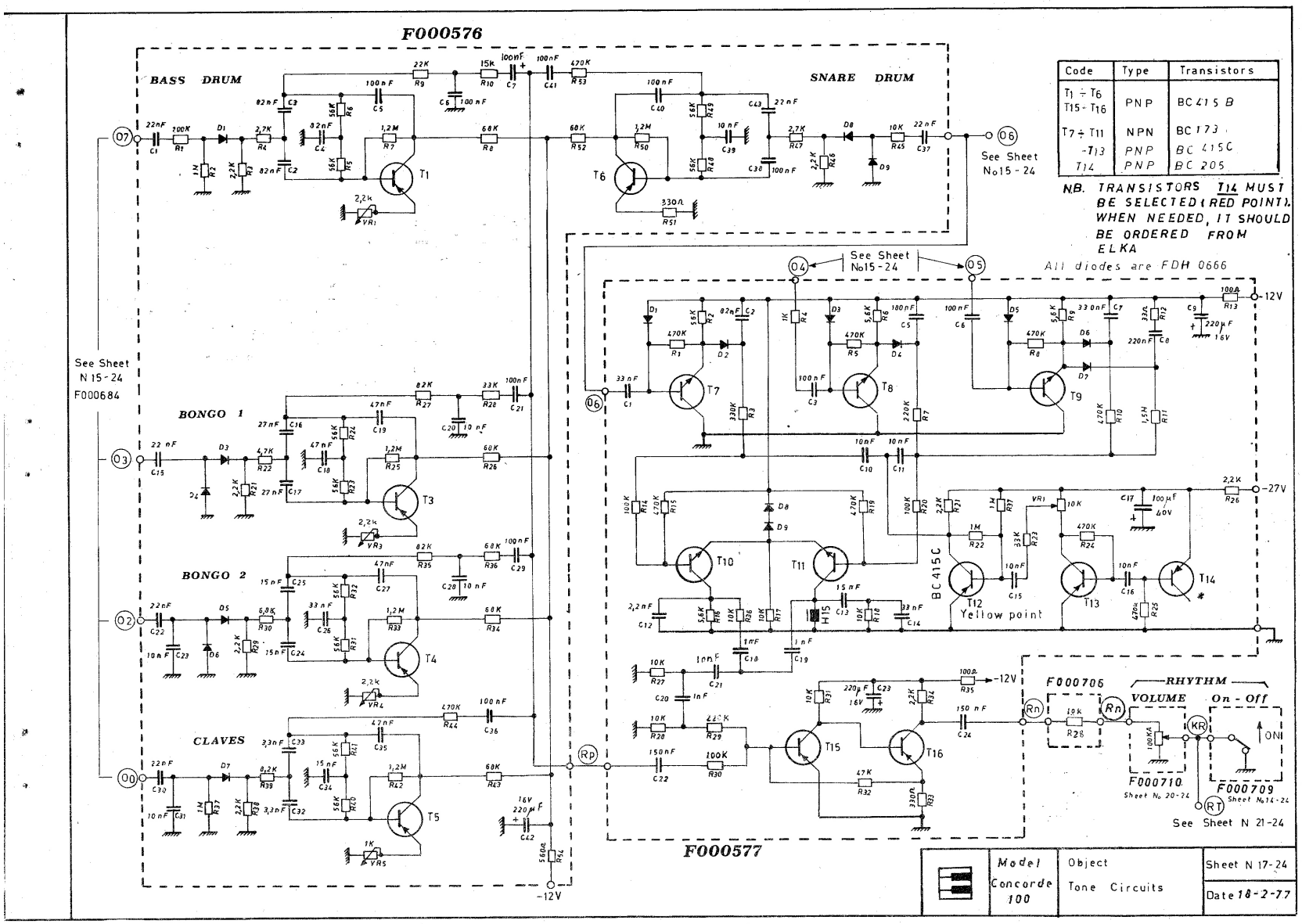

Code	Type	Transistors
T1 ÷ T6 T15 ÷ T16	PNP	BC 415 B
T7 ÷ T11	NPN	BC 173
-T13	PNP	BC 415C
T14	PNP	BC 205

N.B. TRANSISTORS T14 MUST BE SELECTED (RED POINT). WHEN NEEDED, IT SHOULD BE ORDERED FROM ELKA

	Model	Object	Sheet N 17-24
	Concorde 100	Tone Circuits	Date 18-2-77

N.B.

Switches T1....T12 vary according to the various international chord sistems

F000685

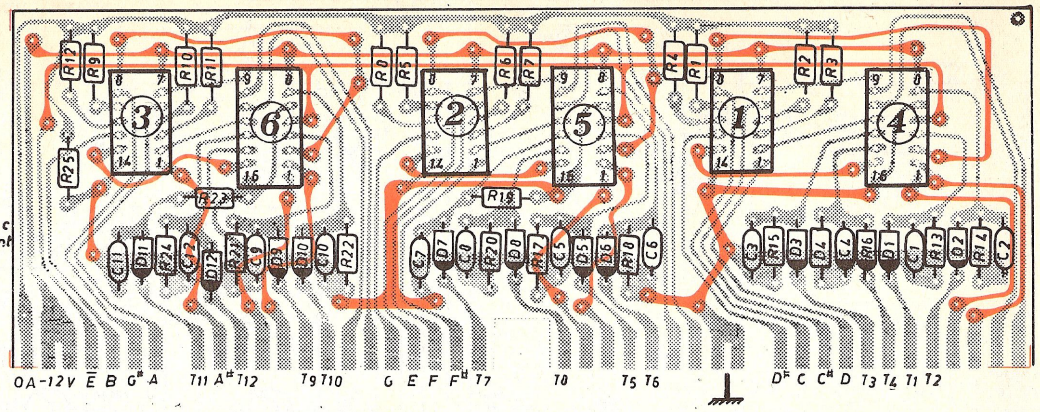

F000701

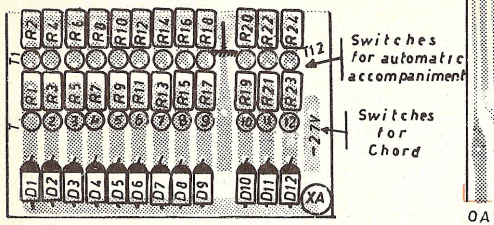

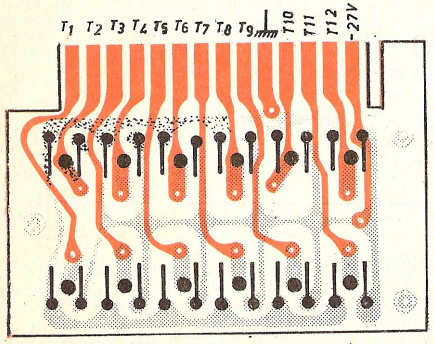

F000699

F000705

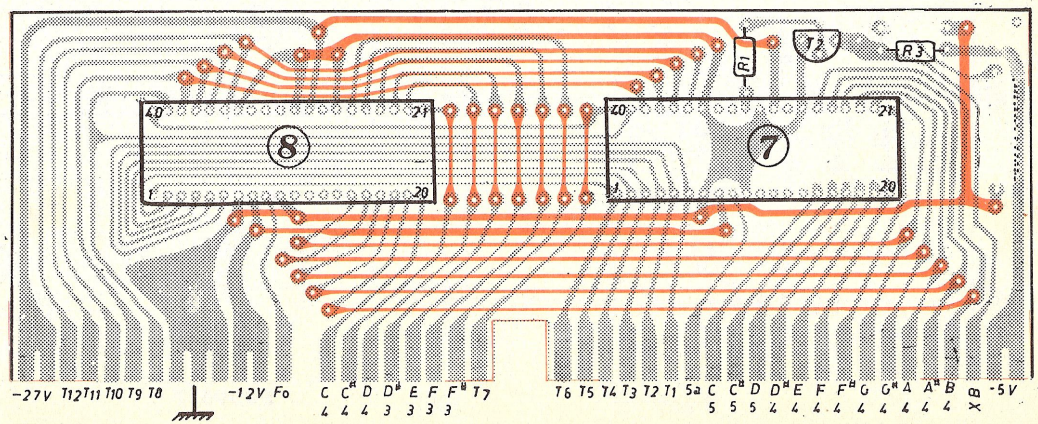

	Model Concorde 100	Object: Assembly of Printed Circuit	Sheet N°18-24
			Date 1-3-77

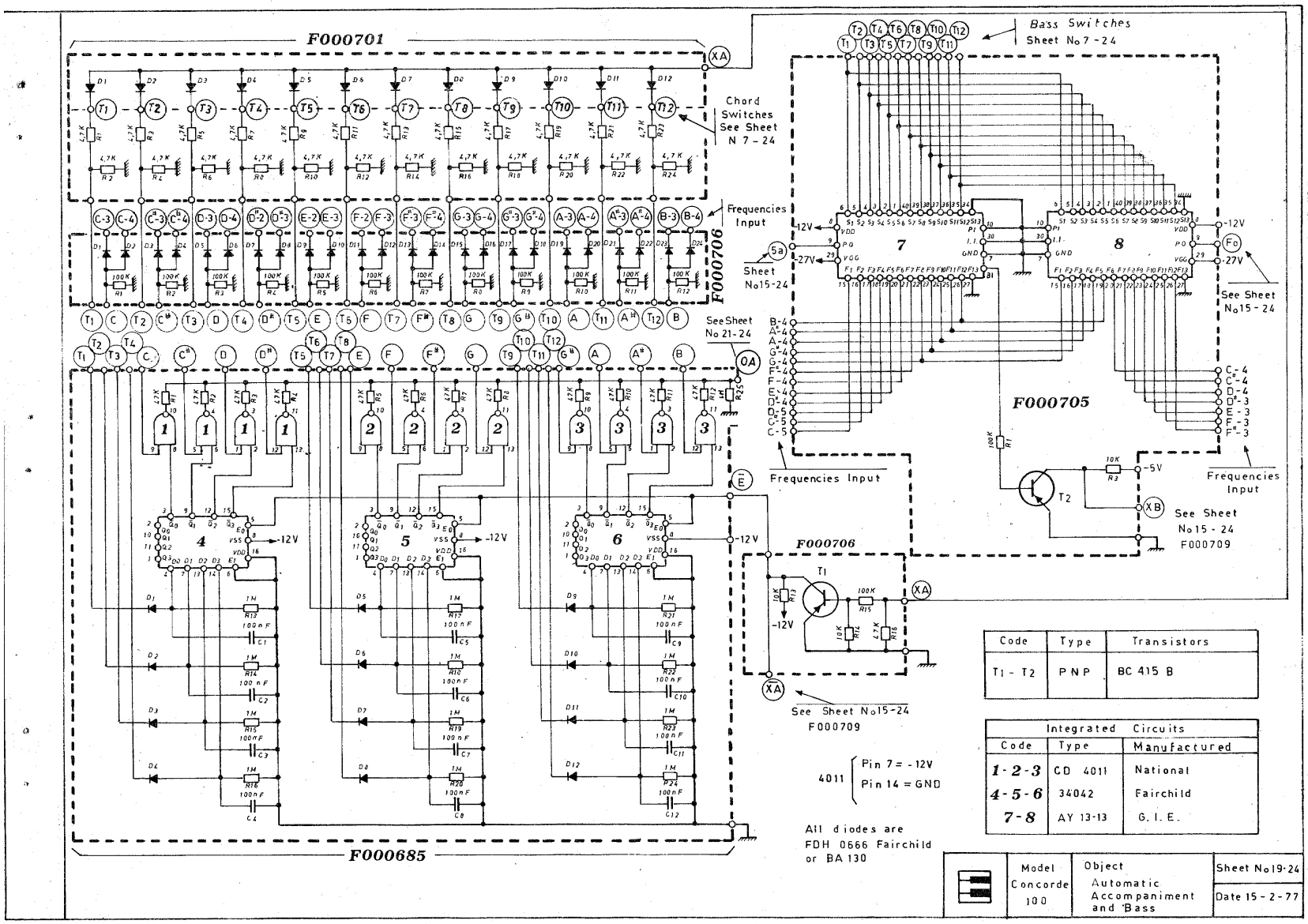

Code	Type	Transistors
T1 - T2	PNP	BC 415 B

Integrated Circuits		
Code	Type	Manufactured
1-2-3	CD 4011	National
4-5-6	34042	Fairchild
7-8	AY 13-13	G. I. E.

Model	Object	Sheet No19-24
Concorde 100	Automatic Accompaniment and Bass	Date 15 - 2 - 77

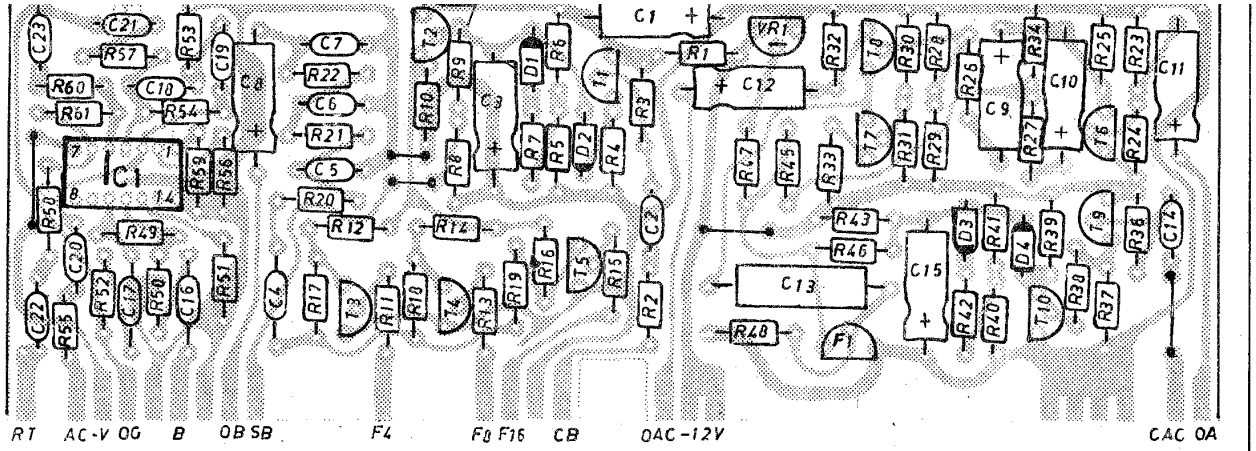

F000704

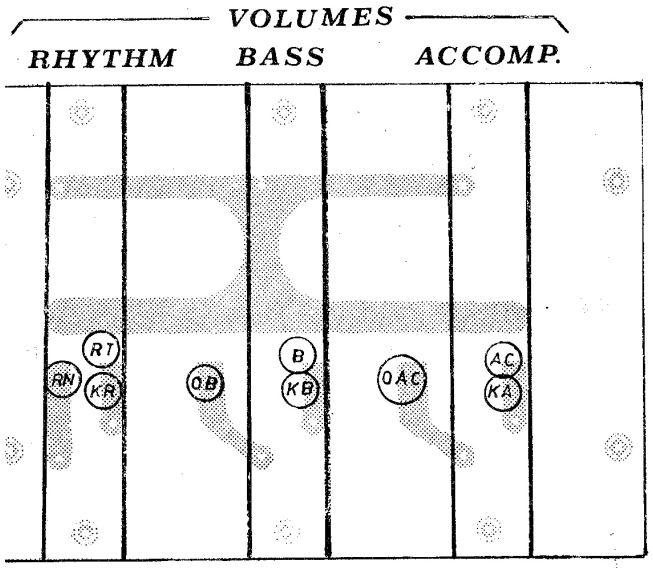

F000710

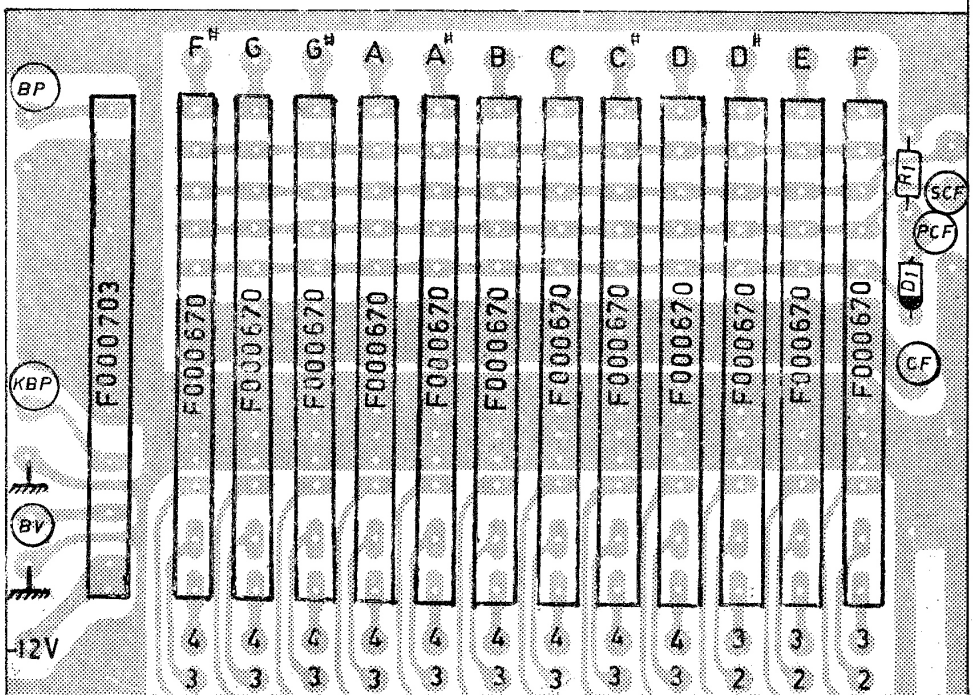

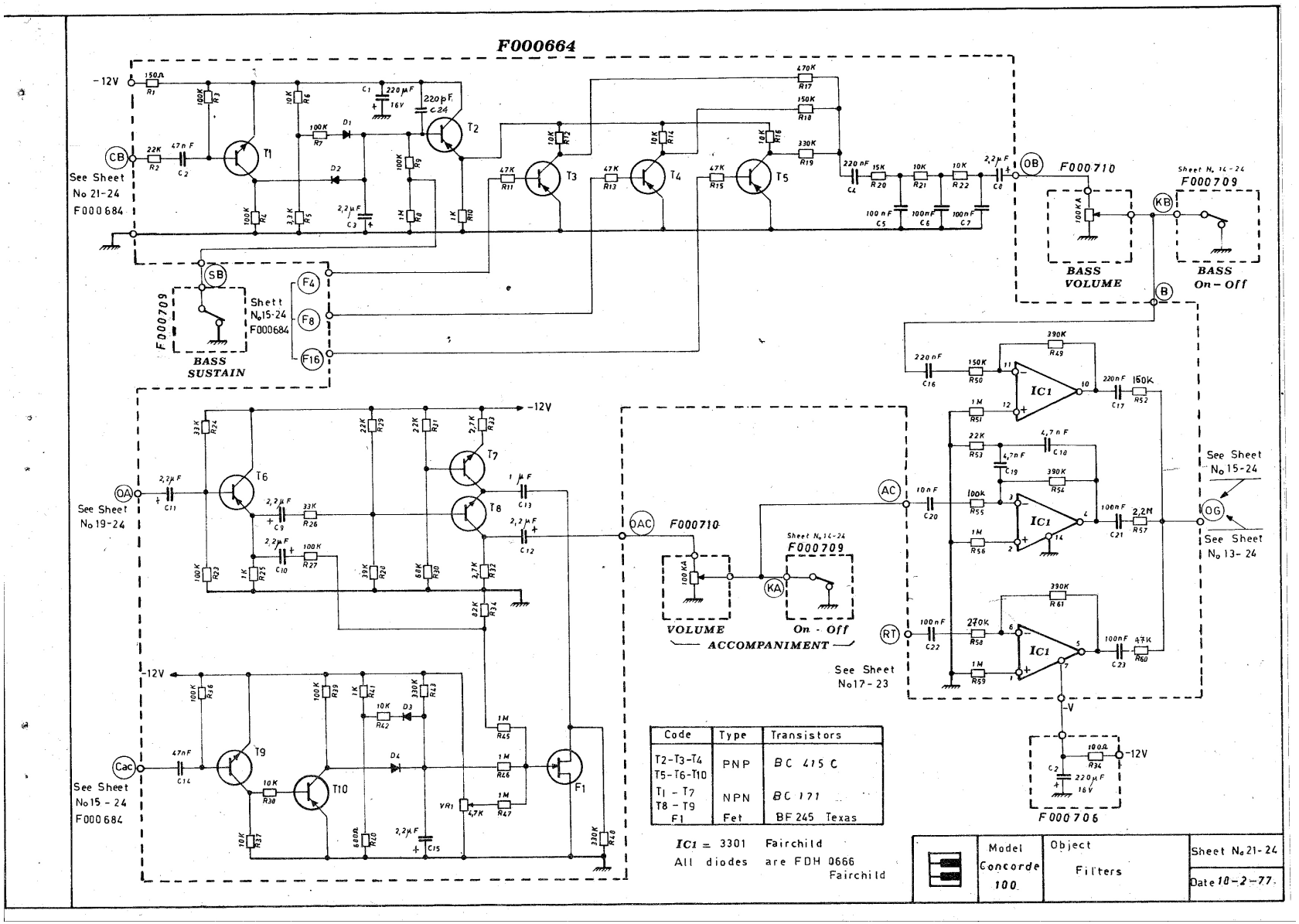

Code	Type	Transistors
T2-T3-T4 T5-T6-T10	PNP	BC 415 C
T1 - T7 T8 - T9	NPN	BC 171
F1	Fet	BF 245 Texas

IC1 = 3301 Fairchild
All diodes are FDH 0666 Fairchild

	Model	Object	Sheet No 21-24
	Concorde 100	Filters	Date 10-2-77

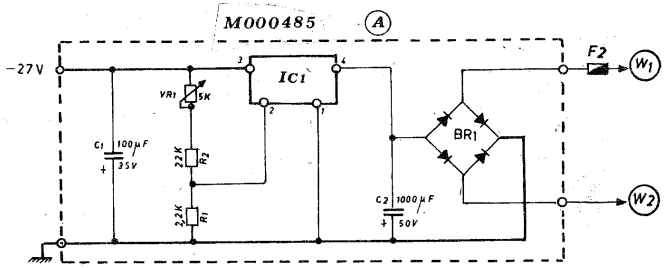

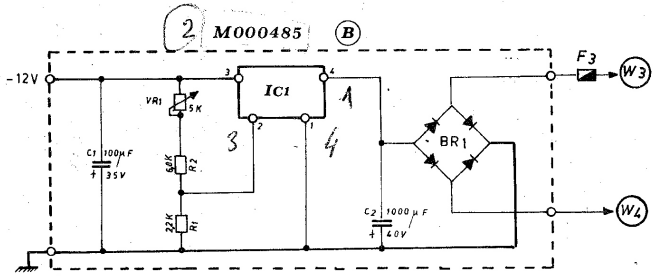

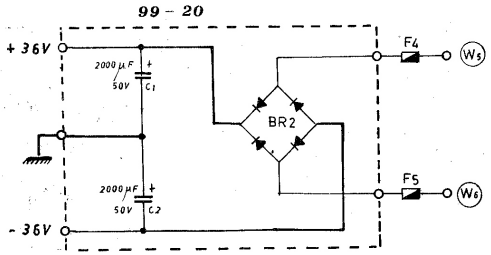

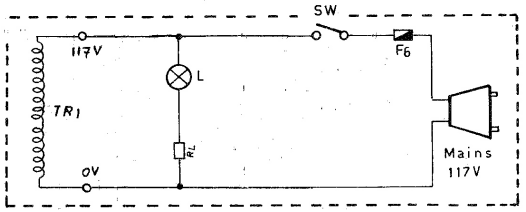

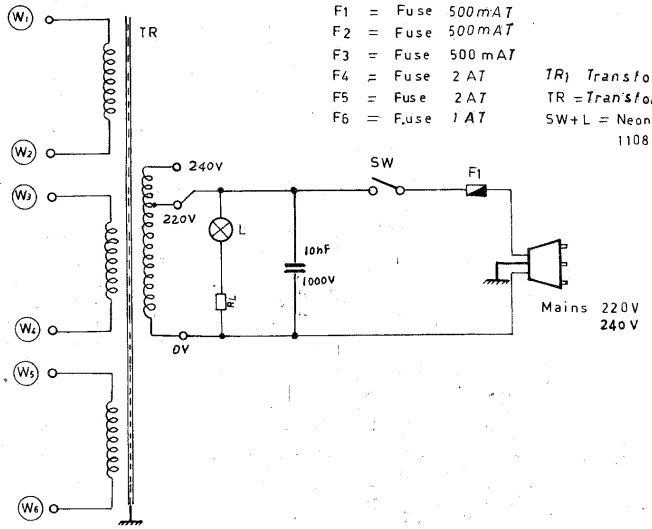

F1 = Fuse 500mAT
F2 = Fuse 500mAT
F3 = Fuse 500 mAT
F4 = Fuse 2 AT
F5 = Fuse 2 AT
F6 = Fuse 1 AT

TR1 Transformer 088K
TR = Transformer T088N
SW+L = Neon 220V
1108 NB2

BR1 = W02 G.I.E.
BR2 = BSB2 = KBL04

IC1 = µA79MG Faircild

	Model	Object	Sheet N 23-24
	Concorde 100	Power Supply	Date 21-2-77

F000706

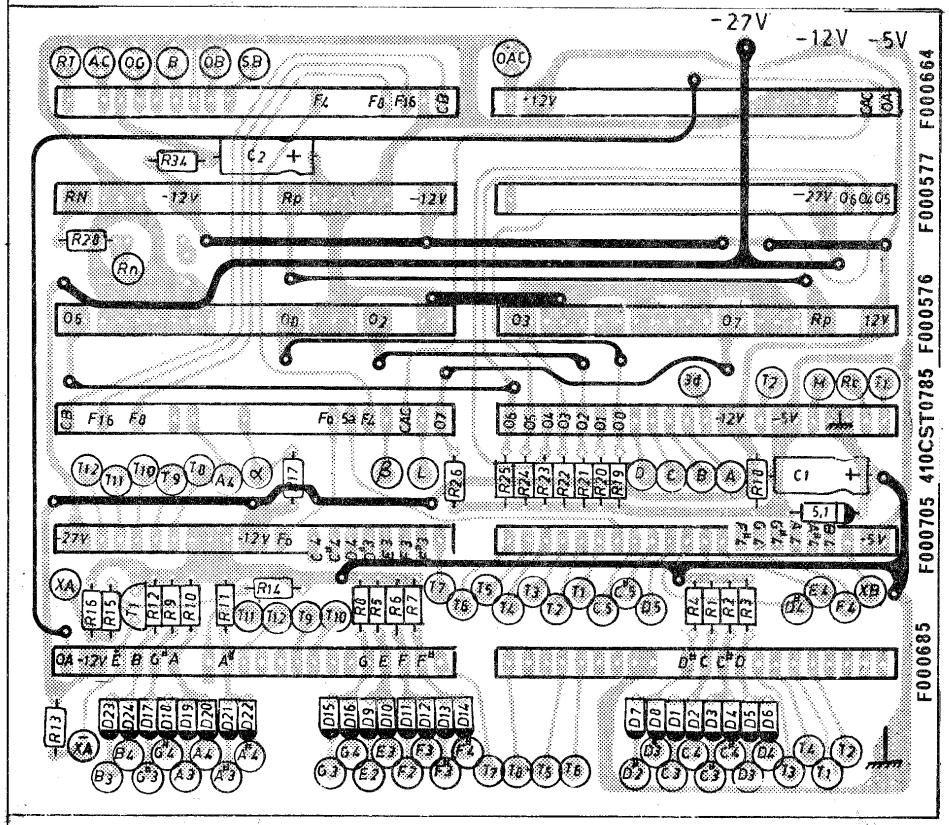

F000712

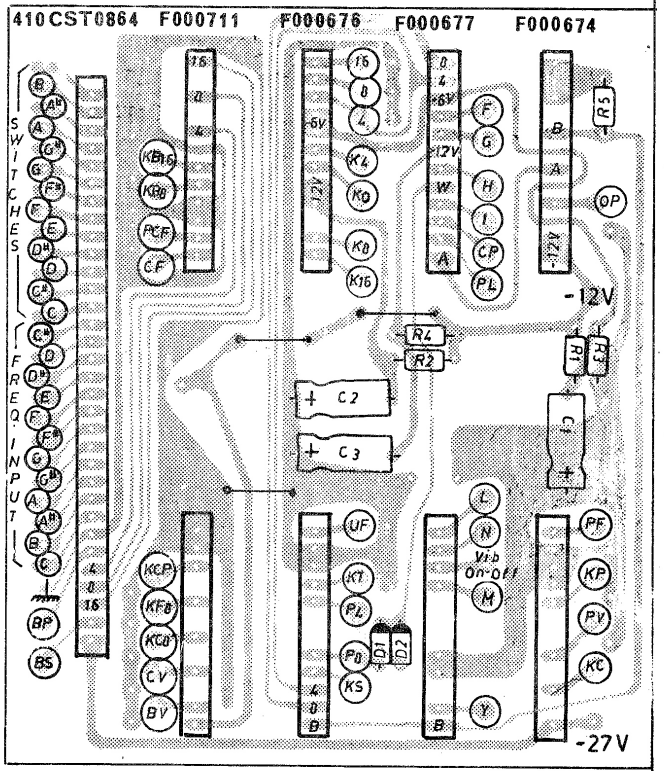

	Model	Object:	Sheet No. 24-24
	Concorde 100	Assembly of Printed Circuit	Date 1-3-77

Manufactured by **ELKA**